US Army Corps of Engineers
Memphis District

# GRAND PRAIRIE REGION AND BAYOU METO BASIN, ARKANSAS PROJECT

# BAYOU METO BASIN, ARKANSAS

## GENERAL REEVALUATION REPORT

## VOLUME 9

## APPENDIX C

## ENGINEERING INVESTIGATIONS & ANALYSES FLOOD CONTROL COMPONENT

**SECTION II – GEOLOGY & SOILS**
**SECTION III – LEVEE & DRAINAGE**
**SECTION IV – STRUCTURAL, ELECTRICAL & MECHANICAL**
**SECTION V – RELOCATIONS**
**SECTION VI – GEOSPATIAL**
**SECTION VII – SURVEY**
**SECTION VIII – COST ENGINEERING REPORT**

**NOVEMBER 2006**

US Army Corps of Engineers
Memphis District

**GRAND PRAIRIE REGION AND BAYOU METO BASIN, ARKANSAS PROJECT**

**BAYOU METO BASIN, ARKANSAS**

**GENERAL REEVALUATION REPORT**

# VOLUME 9

# APPENDIX C

# ENGINEERING INVESTIGATIONS & ANALYSES FLOOD CONTROL COMPONENT

## SECTION II – GEOLOGY & SOILS
## SECTION III – LEVEE & DRAINAGE
## SECTION IV – STRUCTURAL, ELECTRICAL & MECHANICAL
## SECTION V – RELOCATIONS
## SECTION VI – GEOSPATIAL
## SECTION VII – SURVEY
## SECTION VIII – COST ENGINEERING REPORT

**NOVEMBER 2006**

# BAYOU METO BASIN, ARKANSAS PROJECT
# GENERAL REEVALUATION REPORT (GRR) INDEX


VOLUME

MAIN REPORT & EIS ..... 1

APPENDIX A - NRCS ON-FARM REPORT ..... 2
SECTION I - NATURAL RESOURCES PLAN FOR ON-FARM PORTION
SECTION II - DOCUMENTATION REPORT

APPENDIX B - ENGINEERING INVESTIGATIONS & ANALYSES AGRICULTURAL WATER SUPPLY COMPONENT
SECTION I - HYDRAULICS & HYDROLOGY ..... 3
SECTION II - GEOLOGY & SOILS ..... 4
SECTION III – CIVIL DESIGN ..... 5
SECTION IV - STRUCTURAL, ELECTRICAL, & MECHANICAL ..... 5
SECTION V - PUMPING STATIONS ..... 5
SECTION VI - RELOCATIONS ..... 5
SECTION VII - GEOSPATIAL ..... 5
SECTION VIII - SURVEY ..... 5
SECTION IX - COST ENGINEERING REPORT ..... 6
SECTION X - REFERENCE MAPS ..... 7

APPENDIX C - ENGINEERING INVESTIGATIONS & ANALYSES FLOOD CONTROL COMPONENT
SECTION I - HYDRAULICS & HYDROLOGY ..... 8
SECTION II - GEOLOGY & SOILS ..... 9
SECTION III – LEVEE & DRAINAGE ..... 9
SECTION IV - STRUCTURAL, ELECTRICAL, & MECHANICAL ..... 9
SECTION V - RELOCATIONS ..... 9
SECTION VI - GEOSPATIAL ..... 9
SECTION VII - SURVEY ..... 9
SECTION VIII - COST ENGINEERING REPORT ..... 9

APPENDIX D – ENVIRONMENTAL ANALYSES ..... 10

APPENDIX E – ECONOMICS AGRICULTURAL WATER SUPPLY COMPONENT ..... 11

APPENDIX F – ECONOMICS FLOOD CONTROL COMPONENT ..... 11

APPENDIX G - REAL ESTATE AGRICULTURAL WATER SUPPLY COMPONENT ..... 11

APPENDIX H – REAL ESTATE FLOOD CONTROL COMPONENT ..... 11

APPENDIX I - QUALITY CONTROL MANAGEMENT ..... 12

# BAYOU METO COMPREHENSIVE STUDY
# BAYOU METO BASIN, ARKANSAS

## APPENDIX C

## ENGINEERING INVESTIGATIONS & ANALYSES
## FLOOD CONTROL COMPONENT

## SECTION II

## GEOLOGY AND SOILS

Appendix C - Engineering Investigations & Analyses
Flood Control Component

Section II - Geology and Soils

TABLE OF CONTENTS


| Paragraph | Title | Page No. |
|---|---|---|
| II-1 | General | II-1 |
| II-2 | Geology | II-2 |
| II-3 | Subsurface Investigation | II-3 |
| II-4 | Laboratory Testing | II-3 |
| II-5 | Soils & Foundation Analyses | II-3 |
| II-5-a | General | II-3 |
| II-5-b | Design Shear Strengths | II-3 |
| II-5-b-1 | Clays | II-3 |
| II-5-b-2 | Silts | II-3 |
| II-5-b-3 | Sands | II-4 |
| II-6 | Stability Analyses | II-4 |
| II-6-a | Slope Stability | II-4 |
| II-6-b | Structural Stability Analyses | II-4 |
| II-6-b-1 | Sliding | II-4 |
| II-6-b-2 | Bearing Capacity | II-4 |
| II-6-b-3 | Settlement | II-5 |
| II-6-b-4 | Dewatering | II-5 |
| II-7 | Little Bayou Meto Pumping Station | II-5 |
| II-7-a | General | II-5 |
| II-7-b | Excavation Stability Analysis | II-6 |
| II-7-c | Inlet Channel Slope | II-6 |
| II-7-d | Structural Sliding Stability | II-6 |
| II-7-e | Bearing Capacity | II-6 |
| II-7-f | Dewatering | II-7 |
| II-7-g | Truck Bay Foundation | II-7 |
| II-8 | Salt Bayou Hinge Crest Gate Weir | II-8 |
| II-8-a | General | II-8 |
| II-8-b | Dewatering | II-8 |

TABLE OF CONTENTS (cont'd)


| Paragraph | Title | Page No. |
|---|---|---|
| II-9 | Dry Bayou Hinge Crest Gate Weir | II-8 |
| II-9-a | General | II-8 |
| II-9-b | Dewatering | II-9 |

Appendix C - Engineering Investigations & Analyses
Flood Control Component

Section II - Geology and Soils

LIST OF PLATES


| Plate No. | Description |
|---|---|
| II-01 | Little Bayou Meto Pumping Plant Excavation Stability Analysis |
| II-02 | Little Bayou Meto Pumping Plant Excavation Stability Analysis |
| II-03 | Little Bayou Meto Pumping Plant Excavation Dewatering Analysis |
| II-04 | Salt Bayou Hinged Crest Gate Weir Dewatering Analysis |
| II-05 | Dry Bayou Hinged Crest Gate Weir Dewatering Analysis |

Appendix C - Engineering Investigations & Analyses
Flood Control Component

Section II - Geology and Soils

APPENDICES

| **Appendix No.** | **Title** |
|---|---|
| II-A | Computations |

Appendix C - Engineering Investigations & Analyses
Flood Control Component

## Section II - Geology and Soils

II-1. GENERAL. This report includes the geotechnical analyses related to the flood control portion of the Bayou Meto Comprehensive Study. The project consists of water control structures and channel work to reduce flood impacts in the basin. Flood control components include a pumping station on Little Bayou Meto, hinged crest gate weirs on Salt Bayou and Dry Bayou in the Bayou Meto Wildlife Management Area, an auxiliary ditch near Lonoke, several small weirs, channel cleanouts, channel restorations, bridge relocations, culverts and a diversion ditch on Big Bayou Meto. This report will address the major features of the project: a 1000 or 3000 cubic feet per second (cfs) pumping station at Little Bayou Meto and hinged crest gate weirs on Salt and Dry Bayous. Corps of Engineers design criteria and standards were used for the geotechnical design presented in this study.

The pumping station will be located on Little Bayou Meto adjacent to the gravity control structure in Jefferson County. The pump station will be constructed on the north top bank and provide the ability to pump water over the levee into the Arkansas River during high river stages when the gravity drainage structure gates must be closed. Both 1000 and 3000-cfs capacity pump stations were evaluated. The pump station will be connected to the Little Bayou Meto channel by a newly constructed inlet channel. Other features of the pumping station include inlet retaining walls, a truck bay and a dewatering system to lower the ground water during construction.

The hinged crest gate weir on Salt Bayou will be located just south of Dry Bayou in Jefferson County. The structure will be constructed within the existing channel and will require a circular cofferdam and dewatering system. It will have a control tower and retaining walls associated with it.

The Dry Bayou hinged crest gate weir will be located between Salt Bayou and Bayou Meto in Arkansas County. It will be constructed within the existing channel using cofferdams within top bank of the channel and a dewatering

system. It will have a control tower and retaining walls associated with it.

II-2. GEOLOGY. The southern area of the Bayou Meto Basin project lies within the lower portion of the Arkansas River Valley, which is considered a subdivision of the Mississippi Alluvial Plain. The Arkansas River enters the Mississippi Alluvial Plain at Little Rock, Arkansas and, from there to the Mississippi River, flows through a broad valley of low relief called the Arkansas River lowland which represents the present floodplain of the Arkansas River.

The Arkansas River floodplain is covered by a complex pattern of abandoned meanders that are indicated by ox-bow lakes, abandoned channel fills, backswamps, natural levee deposits and point bars. The area within the project boundary is generally underlain by natural levee materials and point bar accretionary deposits. Also, numerous cutoffs, caused by the meandering of the river over time, have formed ox-bow lakes and abandoned channels near the river. Some of the cutoffs or ox-bow lakes have become completely filled with considerable amounts of silt and clay material. Backswamp deposits also exist within the project area and are generally located approximately three to five miles west of the river. Within the Arkansas River floodplain, the substratum sands, silts and clays generally vary in thickness and are underlain by Tertiary deposits. These alluvial materials have been recently deposited and are generally loosely consolidated.

The point bars are ridges and depressions (swales) that formed on the inside of meander loops as the river migrated laterally and downstream. Within the point bar top stratum, there are two types of deposits: silty and sandy elongate bar deposits, or "ridges", which were laid down during high stages of the river, and silty, clayey deposits in depressions, or "swales", which were laid down during falling river stages. The natural levee deposits were built up by deposition of sands and silts during times of flood and generally form the highest portions of the land surface in the project area. In many areas, the point bars are covered by thin natural levee deposits. Natural levee deposits gradually merged laterally away from the river with finer-grained materials, which were deposited in backswamp areas. Backswamp deposits are found in the low-lying areas within the project boundary that are generally

flooded during times of high water. Backswamps have very little relief, usually support a dense growth of vegetation and consist principally of clays containing some organic matter.

II-3. SUBSURFACE INVESTIGATION. Subsurface investigation is documented in Volume 4, Appendix B Engineering Investigations & Analyses Agricultural Water Supply Component, Section II, Geology and Soils. This investigation included drilling an undisturbed soil boring at the potential pumping station sites on Little Bayou Meto and Big Bayou Meto and at the sites of the proposed two hinged crest gate weirs. Boring locations are shown on Plate II-06 of Appendix B. Boring profiles are presented on Plates II-16 and II-17 of Appendix B.

II-4. LABORATORY TESTING. Laboratory testing is documented in Volume 4, Appendix B Engineering Investigations & Analyses Agricultural Water Supply Component, Section II, Geology and Soils.

II-5. SOILS AND FOUNDATION ANALYSES.

II-5-a. General. The boring logs along with the corresponding test results were examined to determine appropriate soil stratification and shear strength parameters for the major structures foundation design. Once stratifications and shear strength values were assigned, a variety of foundation analyses were performed as applicable to determine channel slope stability, structural excavation slope stability, structural sliding stability, bearing capacity, settlement and dewatering requirements.

II-5-b. Design Shear Strengths.

II-5-b-1. Clays. The selection of the design values for the Q and R conditions was based on consistencies indicated by the boring logs, natural densities, moisture contents, Atterberg limits, unconfined compression tests and Q triaxial tests. Design values for the S condition were based on Atterburg Limits as correlated in TM 3-604 dated June 1962.

II-5-b-2. Silts. The design shear strengths for silts were selected based on past experience. Design values of $\phi=20^{\circ}$, c=300 psf were used for the Q and R conditions.

Design values of □=28°, c=0 psf were used for the S case strengths.

II-5-b-3. Sands. Design values for the coarse grained soils were selected based on past experience. A strength of □=30° and c=0 psf was used.

II-6. STABILITY ANALYSES.

II-6-a. Slope Stability. Slope stability analyses were performed to determine the required slopes for the channels and excavations, and required set back distances for cofferdams. Slope stability analyses were conducted in accordance with guidelines and criteria presented in DIVR 1110-1-400, Section 5, Part 4, Item 1, dated March 1973, for Type A projects. Long-term stability analyses for the canals used Type B criteria or a factor of safety greater than 1.0. All other stability analyses were performed for the following loading cases with respective minimum allowable factors of safety for Type A projects:

| Loading Case | Minimum Factor of Safety |
|---|---|
| After Construction (AC) | 1.30 |
| Long-Term (LT) | 1.25 |
| Sudden Drawdown (SD) | 1.20 |

Stability analyses for the appropriate loading conditions were performed using the microcomputer program SSW028 - Analysis of Slope Stability (Wedge Method) published by USACE Waterways Experiment Station, Vicksburg, Mississippi (WES). Only the critical factors of safety are presented for each analysis.

II-6-b. Structural Stability Analyses.

II-6-b-1. Sliding. Sliding stability analyses were performed for both the 1000 and 3000-cfs pumping station options at the Little Bayou Meto structure and the hinged crest gate weirs in accordance with procedures presented in ETL 1110-2-256 and EM 1110-2-2502. Sliding stability analyses were performed to ensure the stability against sliding at the base of the structure or through any soil layer below the base. Program SSW028 from the WES library was used to design and analyze the structure. A minimum allowable factor of safety of 1.50 was used for normal loading conditions.

II-6-b-2. Bearing Capacity. Bearing capacity computations were based on principles and methods presented in EM 1110-1-1905. Bearing capacity was determined by Meyerhof's Equation, which is a modification of the general bearing capacity equation to account for effects of embedment, overburden pressure, foundation shape and inclination of loading. Analyses included determining a factor of safety by dividing the ultimate bearing capacity of the foundation soil by the pressure due to each structure assuming a uniform vertical load. Due to the preliminary nature of the structural analysis correction factors for eccentricity, inclined loading and earthquake loading were not evaluated. A minimum allowable factor of safety of 3.0 is required for normal loading conditions and 2.0 for unusual loading as presented in EM 1110-1-1905 and EM 1110-2-2502.

II-6-b-3. Settlement. Since the Little Bayou Meto pumping station will be founded on a thin layer of silt underlain by sand and silty sand, settlement was considered negligible and no analyses were performed. The two hinged crest gate weirs will be founded on a five-foot layer of clay (CL) underlain by sand and silty sand settlement was also considered negligible and no analyses were performed.

II-6-b-4. Dewatering. Dewatering analyses were performed for the Little Bayou Meto pumping station and the two hinged crest gate weirs. The analysis was performed to determine the required number and layout of wells for the dewatering cost estimate. Dewatering requirements were based on procedures and guidelines presented in TM 5-818-5. The dewatering system was designed to lower the water table five feet below the bottom of the excavation.

II-7. LITTLE BAYOU METO PUMPING STATION.

II-7-a. General. The Little Bayou Meto pumping station was evaluated for 1000 and 3000-cfs capacity stations. The 1000-cfs station will consist of a 55-foot by 68-foot concrete structure with an inlet slab grade at Elevation 151.5, NGVD. The station consists of two bays and has a foundation elevation of 147.5, NGVD. The 3000-cfs station will consist of a 93-foot by 93.5-foot concrete structure with an inlet slab grade at Elevation 147.7, NGVD. The station consists of three bays and has a foundation elevation of 143.7, NGVD. The strength and stratification of soil boring 54-BMU-00 taken in the general proximity of

the proposed site was used for all pumping station analyses.

II-7-b. Excavation Stability Analysis. The structural excavation was evaluated for the 1000-cfs pumping station assuming excavation on a 1V on 3H slope from the existing ground surface of Elevation 182.0, NGVD, to Elevation 147.5, NGVD. Analysis was performed using a minimum 20-foot wide construction berm between the toe of the Arkansas River levee and the structural excavation. The steady seepage case was evaluated using S-strengths and assuming river elevations of 182.0, NGVD, and 199.0, NGVD. The dewatering system was assumed to bring the water phreatic surface to five feet below the ground surface. Analyses resulted in minimum factors of safety of 2.14 for the bank full river stage of Elevation 182.0, NGVD, and 1.39 for the project flood at Elevation 199.0, NGVD. The project flood and bank full analyses are presented on Plates II-01 and II-02, respectively.

II-7-c. Inlet Channel Slope. The inlet channel was evaluated for the 3000-cfs pumping station. The 1V on 3H slope was analyzed assuming a top bank elevation of 182.0, NGVD, and a channel bottom elevation of 145.0, NGVD. The analysis was performed for the most critical case, which would be a dry channel. The after construction analysis resulted in a minimum factor of safety of 2.06. Analysis of the long term case resulted in a minimum factor of safety of 1.60.

II-7-d. Structural Sliding Stability. Sliding stability analyses were performed for both the 1000-cfs and 3000-cfs pump stations. After construction and long term cases were evaluated by conservatively assuming the in situ soil strengths and the water table at the ground surface in the inlet channel. The failure surface was not allowed to go through the concrete structure. The after construction analyses resulted in minimum factors of safety of 2.1 and 30.4 for the 1000 and 3000-cfs structures respectively. The long term analyses resulted in minimum factors of safety of 1.37 and 30.4 for the 1000 and 3000-cfs structures, respectively.

II-7-e. Bearing Capacity. At Little Bayou Meto, 1000 and 3000-cfs pump stations were evaluated for the after construction case assuming the water table at the ground

surface in the inlet channel. The 1000-cfs station will be founded at Elevation 147.5, NGVD, on a 3.5-foot layer of silt underlain by silty sand and sand. Analysis was performed assuming a silt foundation. The 68-foot long by 55-foot wide structure analyzed using a four-foot embedment resulted in a factor of safety of 5.0. The 3000-cfs pump station foundation at Elevation 143.7, NGVD, is comprised of less than two feet of silt underlain with silty sand. Analysis of the 93.5-foot long by 93-foot wide structure with a 3.5-foot embedment resulted in a factor of safety of 14.5. These factors of safety should be large enough to compensate for the additional earthquake, eccentric and inclined loadings due to more detailed structural design and remain above the required minimum factors of safety.

II-7-f. Dewatering. A dewatering analysis was performed for the 1000-cfs pumping station. The system was designed to lower the water table to elevation 142.0, NGVD, five feet below the bottom of the excavation. Two cases were analyzed. The first case assumed artesian flow and a circular source with a headwater elevation of 182.0, NGVD. This is the approximate ground surface elevation at the pump station site and just above the maximum gage reading of 181.7, NGVD, on the landside of Little Bayou Meto Structure. The second case was evaluated for the design flow on the Arkansas River using it as a line source. The location of Tertiary and the aquifer thickness were based on the stratification of boring 54-BMU-00. A Tertiary elevation at 60.0, NGVD, resulted in an aquifer thickness of 82 feet. A horizontal permeability of $900 \times 10^{-4}$ cm/sec was selected based on the $D_{10}$ grain size of the foundation sands taken from this boring. The analysis presented on Plate II-03 indicates a dewatering system consisting of sixteen, 10-inch diameter fully penetrating wells is required.

II-7-g. Truck Bay Foundation. The truck bay will be located adjacent to the pumping station on backfill material. Due to the large design loadings it will be founded on two-foot diameter drilled concrete piers that will extend into sands. Pier capacity was determined according to EM 1110-2-2906 and TM 5-818-1. A minimum factor of safety of 3.0 is required for the usual loading condition in compression piers. Analysis was performed for the long-term case using Q strengths and conservatively assuming a water table at the ground surface and neglecting adhesion in the cohesive backfill. Analysis resulted in an

allowable capacity of 40 kips per pier. For cost estimating purposes the piers are assumed to extend five feet into sands.

II-8. SALT BAYOU HINGE CREST GATE WEIR.

II-8-a. General. The hinged crest gate weir on Salt Bayou will have a 100-foot width. The gate and stilling basin combined is approximately 55 feet in length. The foundation will be at Elevation 165.0, NGVD, with the stilling basin at Elevation 170.0, NGVD. A control tower will be adjacent to the gate. Concrete retaining walls will join the stilling weir and stilling to the channel slopes. The strength and stratification of soil boring 58-BMU-00 taken in the general proximity of the proposed site was used in the analyses.

II-8-b. Dewatering. The dewatering system was designed to lower the water table to Elevation 160.0, NGVD, which is five feet below the bottom of the excavation. Analysis was performed assuming artesian flow and a circular source with a headwater elevation of 187.0, NGVD. This elevation is the equivalent of a five-year event. The stratification of boring 58-BMU-00 was used to determine aquifer thickness. Since this boring did not extend into Tertiary deposits, Tertiary was assumed as elevation 100.0, NGVD, based on existing geologic mapping. A horizontal permeability of $1800 \times 10^{-4}$ cm/sec was selected based on the $D_{10}$ grain size of the foundation sands taken from boring 58-BMU-00 assuming the deeper deposits in the aquifer to be as coarse as than those depicted in the boring. The analysis presented on Plate II-04 indicates a dewatering system consisting of sixteen, 10-inch diameter fully penetrating wells is required.

II-9. DRY BAYOU HINGE CREST GATE WEIR.

II-9-a. General. The hinged crest gate weir on Dry Bayou will have a 25-foot width. The gate and stilling basin combined is approximately 55 feet in length. The foundation will be at Elevation 165.0, NGVD, with the stilling basin at Elevation 170.0, NGVD. The channel thalwag is Elevation 172.0, NGVD. A control tower will be adjacent to the gate. Concrete retaining walls will join the stilling weir and stilling to the channel slopes. The strength and stratification of soil boring 57-BMU-00 taken

in the general proximity of the proposed site was used in the analyses.

II-9-b. Dewatering. The dewatering system was designed to lower the water table to Elevation 160.0, NGVD, which is five feet below the bottom of the excavation. Analysis was performed assuming artesian flow and a circular source with a headwater elevation of 187.0, NGVD. This elevation is the equivalent of a five-year event. The stratification of boring 57-BMU-00 was used to determine aquifer thickness. Since this boring did not extend into Tertiary deposits Tertiary was assumed as elevation 100.0, NGVD, based on existing geologic mapping. Due to the close proximity to the Salt Bayou Weir, the same horizontal permeability, 1800 x $10^{-4}$ cm/sec, was used for this site. The analysis presented on Plate II-05 indicates a dewatering system consisting of sixteen, 10-inch diameter fully penetrating wells is required.

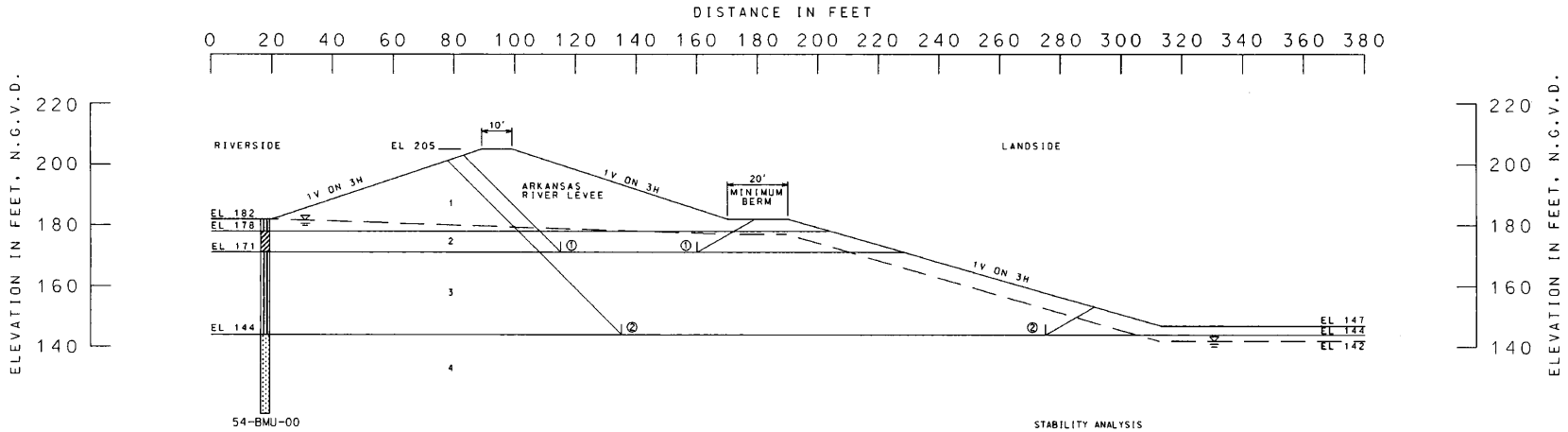


| DESIGN SOIL PROPERITES | | | |
|---|---|---|---|
| SOIL NO. | γ(PCF) | φ(DEG) | C(PSF) |
| 1 | 115 | 20 | 300 |
| 2 | 115 | 0 | 900 |
| 3 | 115 | 20 | 300 |
| 4 | 120 | 30 | 0 |

STABILITY ANALYSIS
WITH POOL ELEV AT 182 FT.

| STEADY SEEPAGE CASE | | | | |
|---|---|---|---|---|
| WEDGE NO. | ELEV. | NEUTRAL BLOCK PASSIVE | NEUTRAL BLOCK ACTIVE | SAFETY FACTOR |
| ① | 171 | 115 | 160 | 2.252 |
| ② | 144 | 135 | 275 | 2.142 |

LITTLE BAYOU METO
PUMPING PLANT EXCAVATION
STABILITY ANALYSIS
SCALES AS SHOWN
U. S. ARMY ENGINEER DISTRICT, VICKSBURG
CORPS OF ENGINEERS
VICKSBURG, MISSISSIPPI
DATE: 07/03/02 FILE NO. X

PLATE II-01

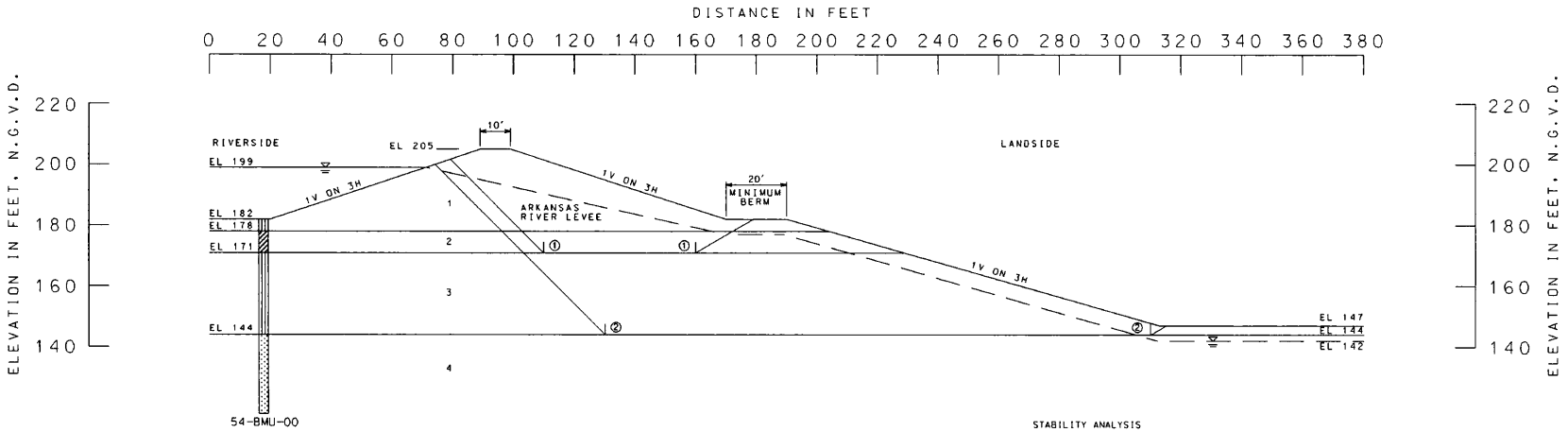


| DESIGN SOIL PROPERITES | | | |
|---|---|---|---|
| SOIL NO. | γ(PCF) | φ(DEG) | C(PSF) |
| 1 | 115 | 20 | 300 |
| 2 | 115 | 0 | 900 |
| 3 | 115 | 20 | 300 |
| 4 | 120 | 30 | 0 |

STABILITY ANALYSIS
WITH POOL ELEV AT 199 FT.

| STEADY SEEPAGE CASE | | | | |
|---|---|---|---|---|
| WEDGE NO. | ELEV. | NEUTRAL BLOCK PASSIVE | NEUTRAL BLOCK ACTIVE | SAFETY FACTOR |
| ① | 171 | 110 | 160 | 1.924 |
| ② | 144 | 130 | 310 | 1.391 |

LITTLE BAYOU METO
PUMPING PLANT EXCAVATION
STABILITY ANALYSIS
SCALES AS SHOWN
U. S. ARMY ENGINEER DISTRICT, VICKSBURG
CORPS OF ENGINEERS
VICKSBURG, MISSISSIPPI
DATE: 07/03/02 FILE NO. X

PLATE II-02

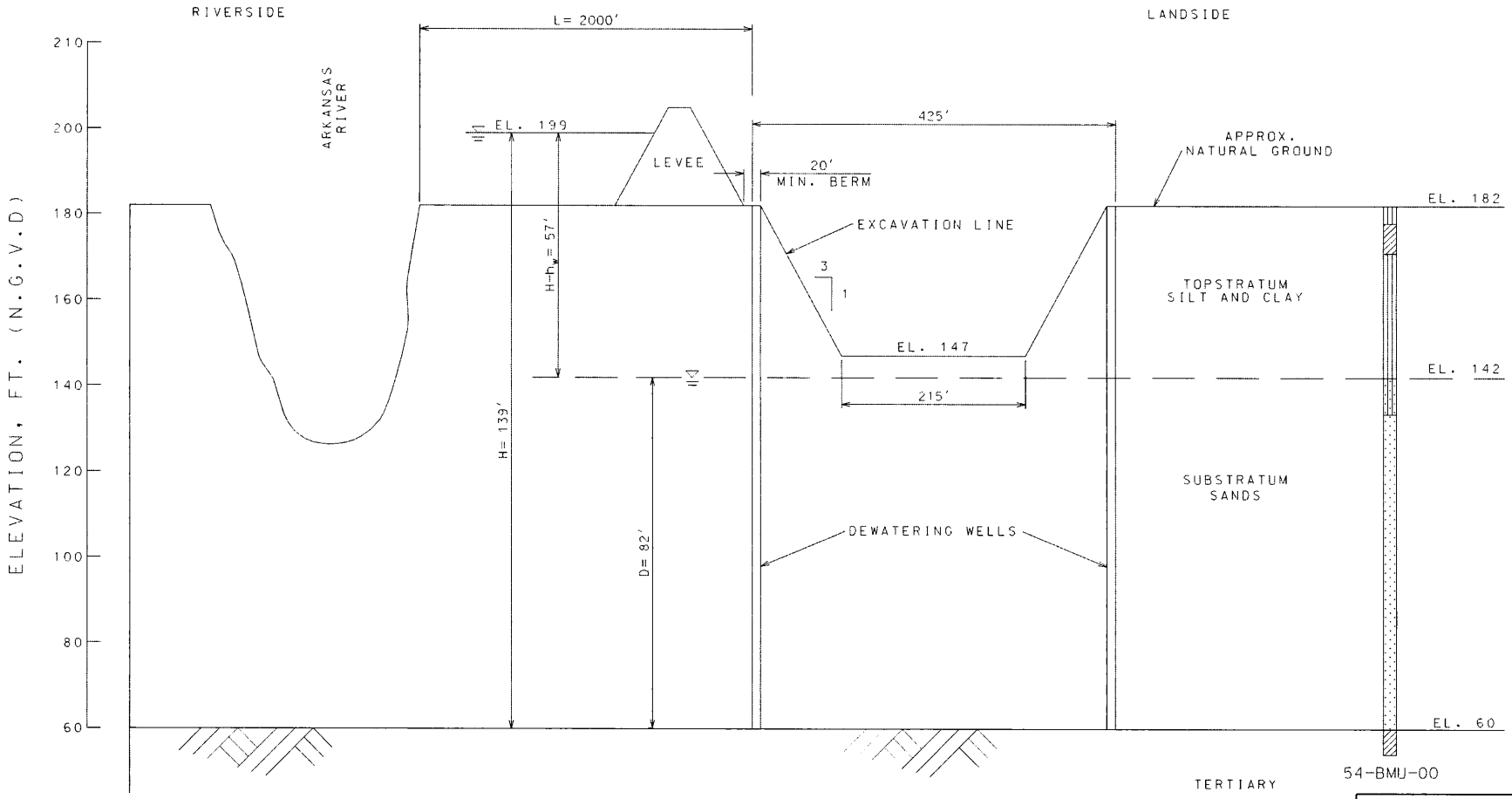


SECTION SHOWN IS PARALLEL WITH INLET CHANNEL THROUGH CENTER OF THE EXCAVATION AND PUMPING STATION

LITTLE BAYOU METO
PUMPING PLANT EXCAVATION
DEWATERING ANALYSIS

SCALES AS SHOWN
U. S. ARMY ENGINEER DISTRICT, VICKSBURG
CORPS OF ENGINEERS
VICKSBURG, MISSISSIPPI

DATE: 04/02/03 FILE NO. X

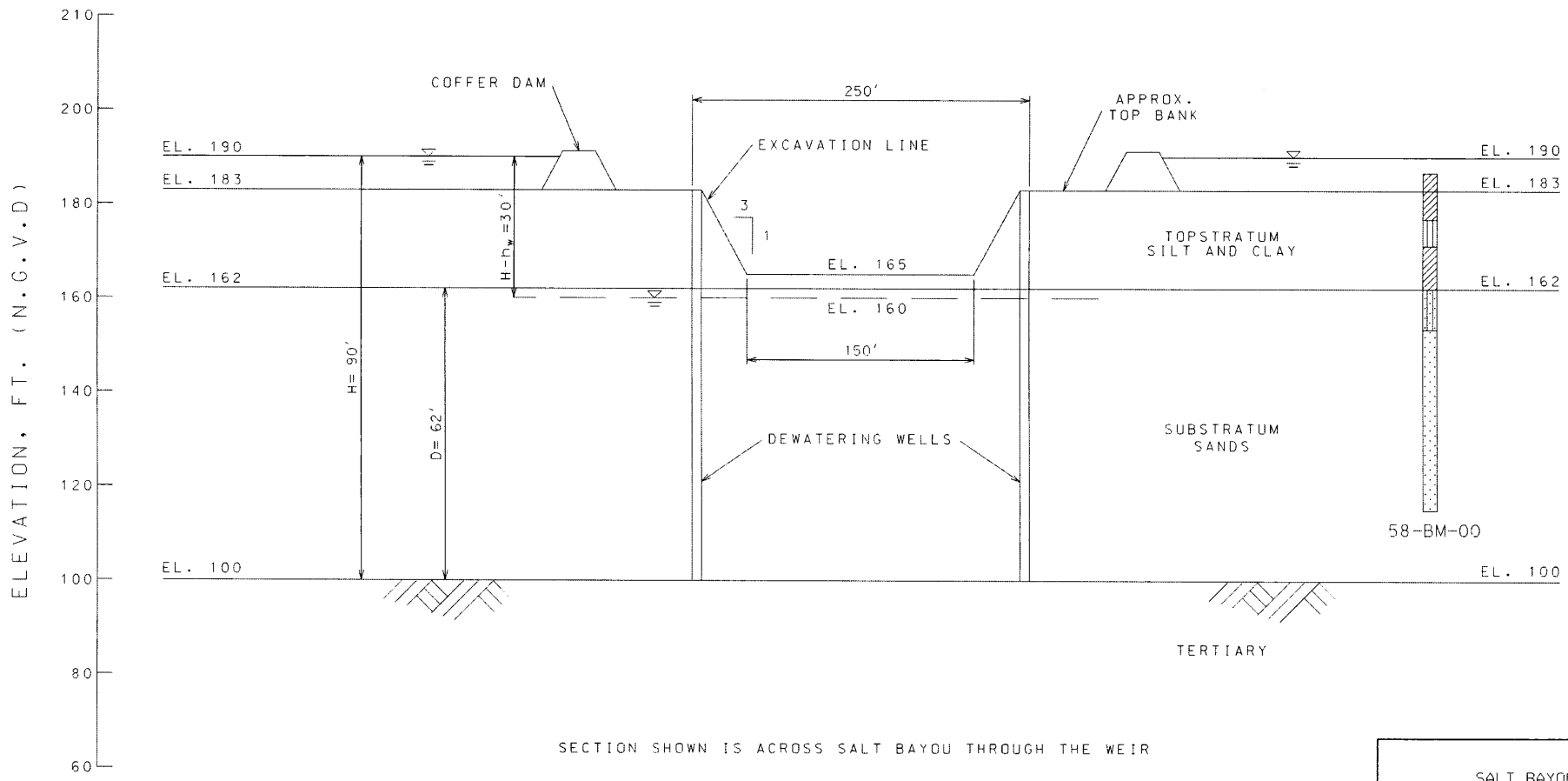


SECTION SHOWN IS ACROSS SALT BAYOU THROUGH THE WEIR

SALT BAYOU

HINGED CREST GATE WEIR

DEWATERING ANALYSIS

SCALES AS SHOWN

U. S. ARMY ENGINEER DISTRICT, VICKSBURG

CORPS OF ENGINEERS

VICKSBURG, MISSISSIPPI

DATE: 04/02/03 FILE NO. X

PLATE II-04

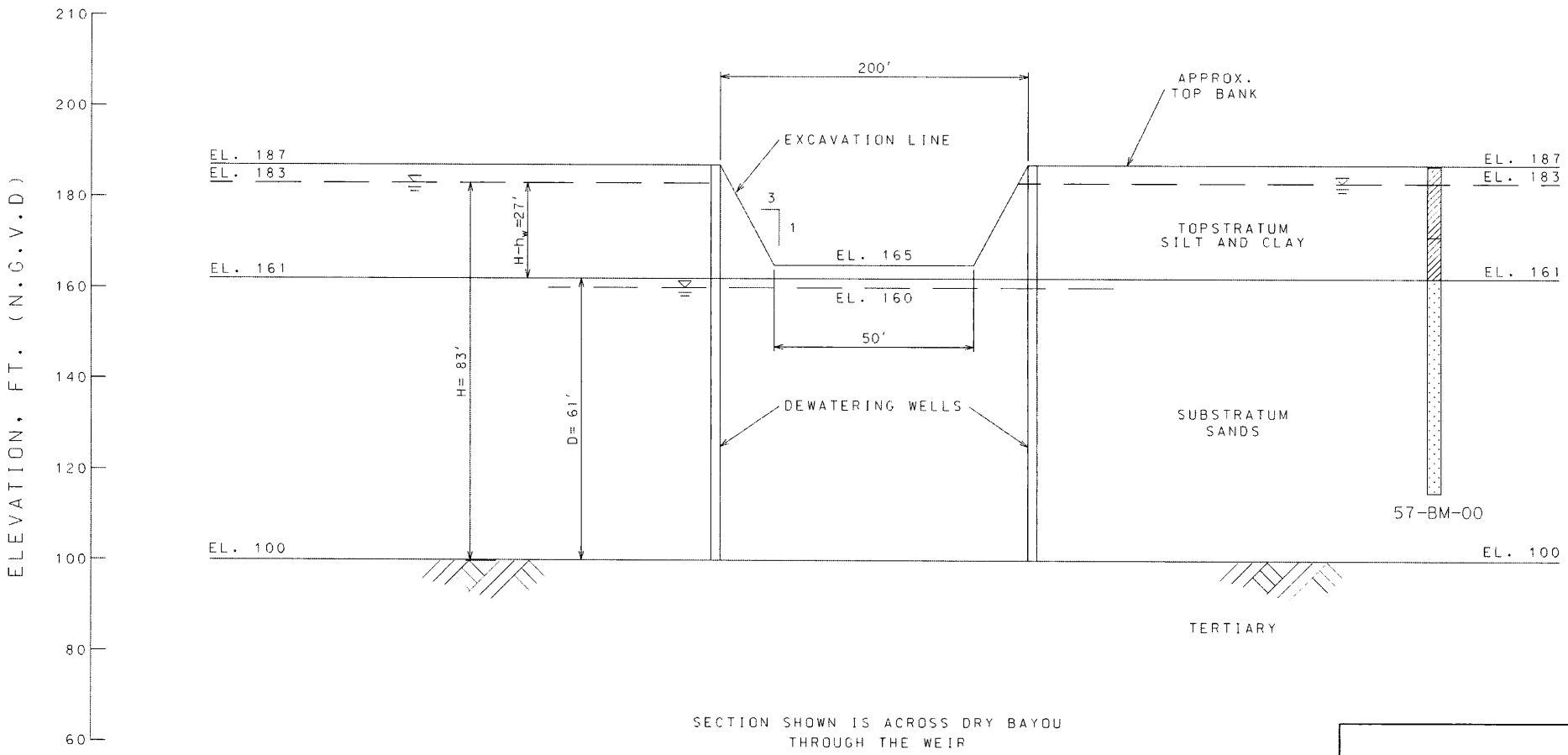


SECTION SHOWN IS ACROSS DRY BAYOU
THROUGH THE WEIR

DRY BAYOU
HINGED CREST GATE WEIR
DEWATERING ANALYSIS
SCALES AS SHOWN
U. S. ARMY ENGINEER DISTRICT, VICKSBURG
CORPS OF ENGINEERS
VICKSBURG, MISSISSIPPI
DATE: 04/02/03 FILE NO. X

# SECTION C – ENGINEERING INVESTIGATIONS & ANALYSES
# FLOOD CONTROL COMPONENT

## SECTION II – GEOLOGY & SOILS

# APPENDIX II-A

Little Bayou Meto (PE2 filename: lbm)
Excavation
Pool Elev. @ 199ft.

| NEUTRAL BLOCK | | | DRIVING AND RESISTING FORCES IN POUNDS | | | | | INITIAL AND FINAL SF | |
|---|---|---|---|---|---|---|---|---|---|
| ACT | PASS | EL | DA | RA | RNB | DP | RP | SF-INIT | SF-FIN |
| 110 | 160 | 171.0 | 62884 | 23279 | 22280 | -8791 | 8540 | 1.84 | 1.92 |

STEADY SEEPAGE CASE USING S-STRENGTHS
PHREATIC PROFILE USED.
S.F. = 1.924

| NEUTRAL BLOCK | | | DRIVING AND RESISTING FORCES IN POUNDS | | | | | INITIAL AND FINAL SF | |
|---|---|---|---|---|---|---|---|---|---|
| ACT | PASS | EL | DA | RA | RNB | DP | RP | SF-INIT | SF-FIN |
| 130 | 310 | 144.0 | 190115 | 70013 | 117389 | -625 | 2100 | 1.36 | 1.39 |

STEADY SEEPAGE CASE USING S-STRENGTHS
PHREATIC PROFILE USED.
S.F. = 1.391

Little Bayou Meto (PE2 filename: lbm)
Excavation
Pool Elev. @ 182ft.

| NEUTRAL BLOCK | | | DRIVING AND RESISTING FORCES IN POUNDS | | | | | INITIAL AND FINAL SF | |
|---|---|---|---|---|---|---|---|---|---|
| ACT | PASS | EL | DA | RA | RNB | DP | RP | SF-INIT | SF-FIN |
| 115 | 160 | 171.0 | 61159 | 22412 | 23949 | -8795 | 6006 | 2.15 | 2.26 |

STEADY SEEPAGE CASE USING S-STRENGTHS
PHREATIC PROFILE USED.
**S.F. = 2.252**

| NEUTRAL BLOCK | | | DRIVING AND RESISTING FORCES IN POUNDS | | | | | INITIAL AND FINAL SF | |
|---|---|---|---|---|---|---|---|---|---|
| ACT | PASS | EL | DA | RA | RNB | DP | RP | SF-INIT | SF-FIN |
| 135 | 275 | 144.0 | 185063 | 65051 | 105962 | -7648 | 6410 | 2.07 | 2.14 |

STEADY SEEPAGE CASE USING S-STRENGTHS
PHREATIC PROFILE USED.
**S.F. = 2.142**

| PROJECT | Little Bayou Meto | PAGE OF | COMPUTED BY | DATE |
|---|---|---|---|---|
| SUBJECT | 3000 CFS INLET CHANNEL SLOPE | | CHECKED BY | DATE |

pe2 lbm1

BORING 54-BMU-00

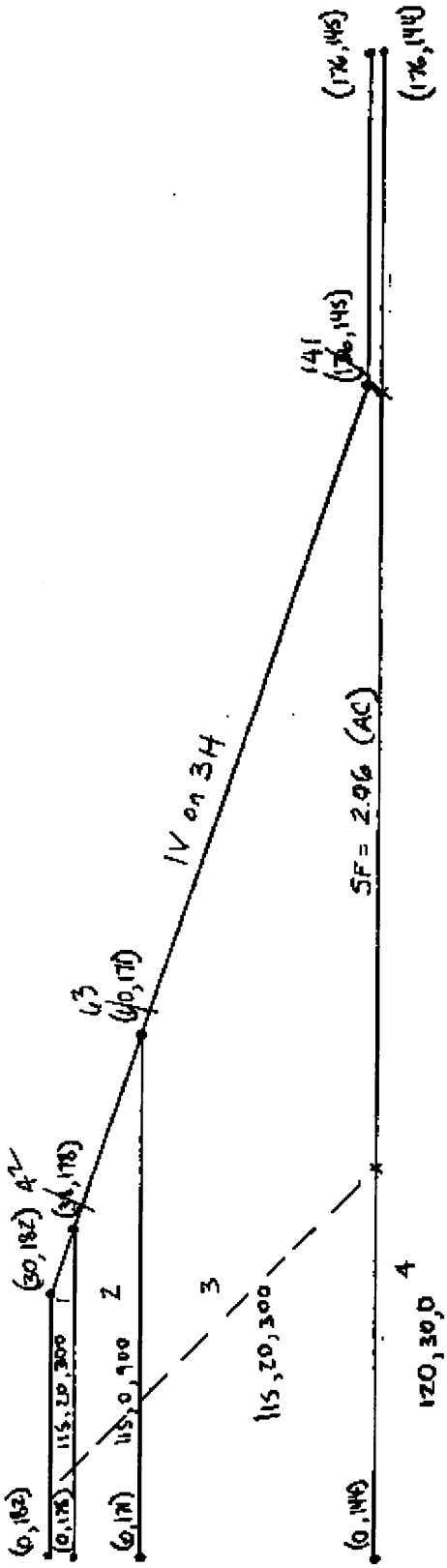


LONG TERM CASE

CL layer 2 LL = 42 PL = 23

PI = 42 - 23 = 19

From TM 3-604 Figure 31

For PI = 19 $\phi' = 28°$

$$FS = \frac{\tan \phi'}{\tan i}$$

For 1:3 slope $FS = \frac{\tan 28°}{1/3} = 1.60$

Little Bayou Meto

| NEUTRAL BLOCK | | | DRIVING AND RESISTING FORCES IN POUNDS | | | | | INITIAL AND FINAL SF | |
|---|---|---|---|---|---|---|---|---|---|
| ACT | PASS | EL | DA | RA | RNB | DP | RP | SF-INIT | SF-FIN |
| 60 | 120 | 144.0 | 62837 | 29337 | 27985 | -2640 | 2894 | 2.14 | 2.18 |
| 55 | 120 | 144.0 | 68858 | 31288 | 31977 | -2638 | 2955 | 2.08 | 2.14 |
| 50 | 120 | 144.0 | 73948 | 32735 | 35623 | -2638 | 2956 | 2.05 | 2.14 |
| 45 | 120 | 144.0 | 77932 | 33492 | 38896 | -2639 | 2913 | 2.06 | 2.17 |
| 50 | 125 | 144.0 | 73931 | 33041 | 37054 | -1652 | 2189 | 2.03 | 2.12 |
| 50 | 130 | 144.0 | 73916 | 33320 | 38210 | -896 | 1495 | 2.01 | 2.09 |
| 50 | 135 | 144.0 | 73902 | 33575 | 39082 | -370 | 880 | 1.99 | 2.08 |
| 50 | 140 | 144.0 | 73889 | 33801 | 39656 | -73 | 365 | 1.97 | 2.06 |
| 50 | 145 | 144.0 | 73890 | 33778 | 39704 | -57 | 358 | 1.97 | 2.06 |

AFTER CONSTRUCTION CASE USED R STRGTH BELOW GR WATER
145.000
**S.F. = 2.060**

COMPUTATION SHEET

| PROJECT | Little Bayou Meto Pump Station | PAGE OF | COMPUTED BY AH | DATE |
|---|---|---|---|---|
| SUBJECT | | | CHECKED BY | DATE |

SOIL BORING 54-BMU-00

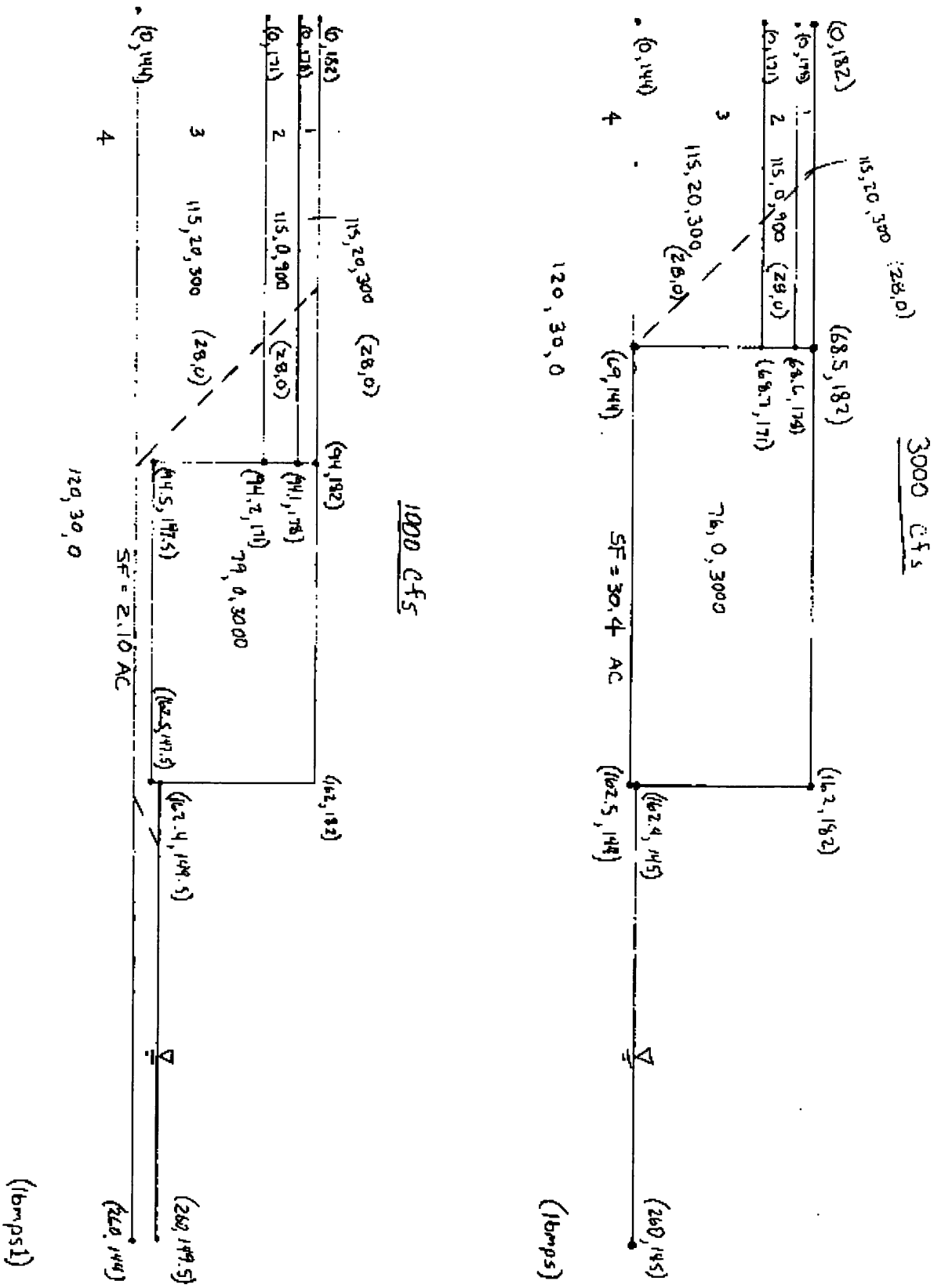

**Little Bayou Meto Pump Station** **(LBMPS1)**

**1000 cfs**

NEUTRAL BLOCK BASE 1
94.00, 144.00 172.00, 144.00

AFTER CONSTRUCTION CASE USED R STRGTH BELOW GR WATER
149.500

INITIAL FACTOR OF SAFETY = 1.98

CROSS-OVER OCCURS AT STA. 162.24

| X | Y | WEIGHT | UPLIFT | SOIL |
|---|---|---|---|---|
| 60.91 | 182.00 | 774. | .00 | 1 |
| 64.28 | 178.00 | 6037. | .00 | 2 |
| 71.28 | 171.00 | 64016. | 795.49 | 4 |
| 94.00 | 144.00 | 437. | 34.37 | 4 |
| 94.10 | 144.00 | 437. | 34.37 | 4 |
| 94.20 | 144.00 | 1125. | 103.13 | 4 |
| 94.50 | 144.00 | 211140. | 23203.13 | 4 |
| 162.00 | 144.00 | 595. | 82.02 | 4 |
| 162.24 | 144.00 | 191. | 55.48 | 5 |
| 162.40 | 144.00 | 56. | 34.38 | 5 |
| 162.50 | 144.00 | 5667. | 3265.63 | 5 |
| 172.00 | 144.00 | 2067. | 1123.35 | 4 |
| 178.54 | 149.50 | 0. | .00 | 0 |

| | L WEDGE | N BLOCK | R WEDGE | TOTAL |
|---|---|---|---|---|
| FD | 83030.00 | .00 | -1739.38 | 81290.63 |
| FR | 35655.86 | 43454.09 | 2195.69 | 81305.64 |

**S.F. = 2.099**

**Little Bayou Meto Pump Station** **(LBMPS)**

**3000 cfs**

NEUTRAL BLOCK BASE 1
69.00, 144.00 162.50, 144.00

AFTER CONSTRUCTION CASE USED R STRGTH BELOW GR WATER
145.000

INITIAL FACTOR OF SAFETY = 53.45

CROSS-OVER OCCURS AT STA. 162.00

| X | Y | WEIGHT | UPLIFT | SOIL |
|---|---|---|---|---|
| 30.95 | 182.00 | 931. | .00 | 1 |
| 35.00 | 178.00 | 6038. | .00 | 2 |
| 42.00 | 171.00 | 73902. | 7.81 | 4 |
| 68.50 | 144.50 | 432. | 3.44 | 3 |
| 68.60 | 144.40 | 433. | 4.06 | 3 |
| 68.70 | 144.30 | 114. | 1.17 | 2 |
| 68.73 | 144.27 | 1192. | 14.77 | 4 |
| 69.00 | 144.00 | 337497. | 5812.50 | 5 |
| 162.00 | 144.00 | 0. | .00 | 5 |
| 162.00 | 144.00 | 1501. | 25.00 | 5 |
| 162.40 | 144.00 | 467. | 6.25 | 5 |
| 162.50 | 144.00 | 4524. | 30.66 | 5 |
| 163.48 | 145.00 | 63278. | .00 | 1 |
| 191.30 | 173.16 | 0. | .00 | 0 |

| | L WEDGE | N BLOCK | R WEDGE | TOTAL |
|---|---|---|---|---|
| FD | 83030.01 | .00 | -68649.41 | 14380.60 |
| FR | 5819.28 | 6327.70 | 2232.01 | 14378.99 |

**S.F. = 30.437**

**Little Bayou Meto Pump Station** $\phi = 28°$ **(LBMPS)**

**3000 cfs** $c = 0$ for all but sand

NEUTRAL BLOCK BASE 1
69.00, 144.00 162.50, 144.00

LONG TERM
~~AFTER CONSTRUCTION~~ CASE USED R STRGTH BELOW GR WATER
145.000 .

INITIAL FACTOR OF SAFETY = 74.18

CROSS-OVER OCCURS AT STA. 162.00

| X | Y | WEIGHT | UPLIFT | SOIL |
|---|---|---|---|---|
| 30.81 | 182.00 | 936. | .00 | 1 |
| 34.88 | 178.00 | 6144. | .00 | 2 |
| 42.00 | 171.00 | 73902. | 7.81 | 4 |
| 68.50 | 144.50 | 432. | 3.44 | 3 |
| 68.60 | 144.40 | 433. | 4.06 | 3 |
| 68.70 | 144.30 | 114. | 1.17 | 2 |
| 68.73 | 144.27 | 1192. | 14.77 | 4 |
| 69.00 | 144.00 | 337497. | 5812 | 5 |
| 162.00 | 144.00 | 0. | .00 | 5 |
| 162.00 | 144.00 | 1501. | 25.00 | 5 |
| 162.40 | 144.00 | 467. | 6.25 | 5 |
| 162.50 | 144.00 | 4523. | 30.66 | 5 |
| 163.48 | 145.00 | 63029. | .00 | 1 |
| 191.19 | 173.20 | 0. | .00 | 0 |

| | L WEDGE | N BLOCK | R WEDGE | TOTAL |
|---|---|---|---|---|
| FD | 83030.01 | .00 | -68751.41 | 14278.60 |
| FR | 5564.63 | 6334.64 | 2374.94 | 14274.21 |

**S.F. = 30.398**

**Little Bayou Meto Pump Station** $\phi = 28^\circ$ for all but sand **(LBMPS1)**

**1000 cfs** $c = 0$

NEUTRAL BLOCK BASE 1
95.00, 144.00 170.00, 144.00

LONG TERM
~~AFTER CONSTRUCTION~~ CASE USED R STRGTH BELOW GR WATER
149.500

INITIAL FACTOR OF SAFETY = 1.29

THE PROBLEM DID NOT CONVERGE IN THE ALLOTTED
IX TRIALS. THE APPROXIMATE SAFETY FACTOR IS 1.373

AFTER CONSTRUCTION CASE USED R STRGTH BELOW GR WATER
149.500

| X | Y | WEIGHT | UPLIFT | SOIL |
|---|---|---|---|---|
| 68.97 | 182.00 | 630. | .00 | 6 |
| 71.71 | 178.00 | 4136. | .00 | 7 |
| 76.50 | 171.00 | 47831. | 349.49 | 9 |
| 94.00 | 145.46 | 421. | 25.71 | 9 |
| 94.10 | 145.31 | 423. | 26.62 | 9 |
| 94.20 | 145.17 | 906. | 85.34 | 9 |
| 94.50 | 144.73 | 922. | 160.47 | 9 |
| 95.00 | 144.00 | 113632. | 23031.25 | 9 |
| 162.00 | 144.00 | 431. | 137.50 | 9 |
| 162.40 | 144.00 | 46. | 34.38 | 9 |
| 162.50 | 144.00 | 3998. | 2578.13 | 9 |
| 170.00 | 144.00 | 2539. | 1379.83 | 9 |
| 178.03 | 149.50 | 0. | .00 | 0 |

| | L WEDGE | N BLOCK | R WEDGE | TOTAL |
|---|---|---|---|---|
| FD | 80673.24 | .00 | -1739.38 | 78933.87 |
| FR | 42307.15 | 35755.63 | 897.75 | 78960.53 |

**S.F. = 1.373**

COMPUTATION SHEET

| PROJECT | BAYOU METO | PAGE OF | COMPUTED BY | DATE |
|---|---|---|---|---|
| SUBJECT | LITTLE BAYOU METO PUMP STATION | | CHECKED BY | DATE |

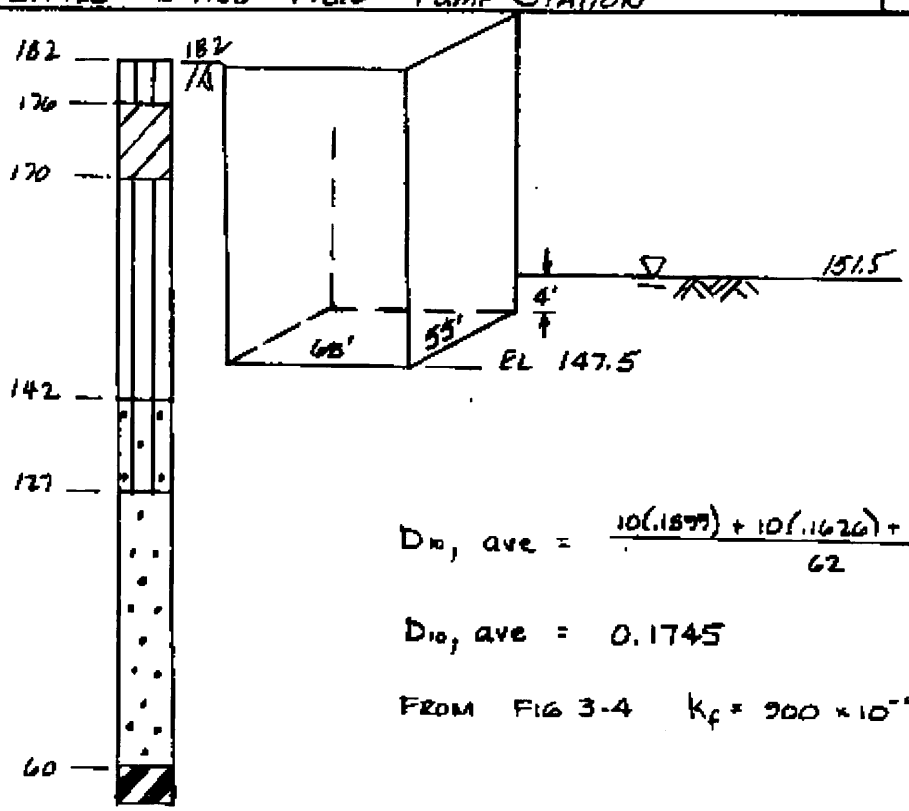


54-BMD-00

$$D_{10},\ ave = \frac{10(.1877) + 10(.1626) + 7(.1404) + 15(.1050) + 20(.1693)}{62}$$

$D_{10},\ ave = 0.1745$

FROM FIG 3-4 $k_f = 900 \times 10^{-4}$ cm/sec

1000 CFS STATION

Evaluate as rectangular footing on silt

NAVFAC DM 7.2

$$q_{ult} = cN_c\left(1 + .3\frac{B}{L}\right) + \gamma D N_q + 0.4\gamma B N_\gamma$$

$$q_{ult} = 300(15)\left[1 + .3\left(\frac{55}{68}\right)\right] + (115-62.4)\,4\,(6.5) + 0.4\,(115-62.4)\,55\,(3)$$

$$q_{ult} = 5592 + 1368 + 3472$$

$$q_{ult} = 10{,}432 \text{ psf}$$

For FS = 3 $q_{all} = \frac{10432}{3} = 3478$ psf

COMPUTATION SHEET

| PROJECT | PAGE OF | COMPUTED BY | DATE |
|---|---|---|---|
| SUBJECT PUMP STATION BEARING CAPACITY | | CHECKED BY | DATE |

1000 CFS

WEIGHT – CONCRETE 9,945 k
PUMPS 153 k
GEARS 19 k
MOTORS 29.6 k
SWITCH GEAR 12 k
10,158.6 kips

volume = 9,945,000 lb × $\frac{1\ yd^3}{150 \times 27}$

Vol = 2455 $yd^3$

AREA – 55' × 68' = 3740 $ft^2$

$WT/FT^2 = \frac{10,158.6\ k}{3740\ FT^2} = 2.7\ k/ft^2$

3000 CFS

WEIGHT – CONCRETE 24,350 k
PUMPS 417 k
GEARS 63 k
MOTORS 165 k
SWITCH GEAR 19.6 k
25,014.6 k

AREA – 93' × 93.5' = 8695 $ft^2$

$WT/FT^2 = \frac{25,014.6}{8695} = 2.9\ k/ft^2$

COMPUTATION SHEET

| PROJECT BAYOU METO | PAGE 1 OF 2 | COMPUTED BY | DATE |
|---|---|---|---|
| SUBJECT LITTLE BAYOU METO PUMP STATION BEARING CAPACITY | | CHECKED BY | DATE |

1000 CFS

EM 1110-1-1905 EQ 4-1:

$$q_u = cN_c \zeta_c + \frac{1}{2} B' \gamma'_H N_\gamma \zeta_\gamma + \sigma_D N_q \zeta_q$$

@ EL 147.5 silt foundation

$\phi = 20°$ $c = 300$ psf $= 0.3$ ksf $D = 4'$ embedment

$\gamma' = 115 - 62.4 = 52.6$ pcf $= 0.0526$ kcf

TABLE 4-1:

$N_c = 17.69$ $N_\gamma = 4.9$ $N_q = 7.44$

TABLE 4-3:

ASSUME NO INCLINATION & NO ECCENTRIC LOAD

$$\zeta_c = 1 \times 1 \times \left\{1 + 0.2\left[\tan\left(45 + \frac{\phi}{2}\right)\right]\frac{D}{B}\right\}$$

$$\zeta_c = 1 + 0.2\left[\tan\left(45 + \frac{20}{2}\right)\right]\frac{4}{68}$$

$$\zeta_c = 1.02$$

$$\zeta_\gamma = 1 \times 1 \times \left\{1 + 0.1\left[\tan\left(45 + \frac{\phi}{2}\right)\right]\frac{D}{B}\right\}$$

$$\zeta_\gamma = 1 + 0.1\left[\tan\left(45 + \frac{20}{2}\right)\right]\frac{4}{68}$$

$$\zeta_\gamma = 1.01$$

$$\zeta_q = 1 \times 1 \times \left\{1 + 0.1\left[\tan\left(45 + \frac{\phi}{2}\right)\right]\frac{D}{B}\right\}$$

$$\zeta_q = 1 + 0.1\left[\tan\left(45 + \frac{20}{2}\right)\right]\frac{4}{68}$$

$$\zeta_q = 1.01$$

$$q_u = 0.3(17.69)1.02 + \frac{1}{2}(68)0.0526(4.9)1.01 + 0.0526(4)7.44(1.01)$$

$q_u = 5.41 + 8.85 + 1.58$ reduction factor for mats EQ 4-13

$r_\gamma = 1 - 0.25 \log \frac{B}{6}$ $r_\gamma = 0.74$

$q_u = 5.41 + 8.85(0.74) + 1.58 = 13.54$

STRUCTURE WT = 2.7 ksf

Factor of Safety $= \frac{13.54}{2.7} = 5.0 > 3$ ∴ adequate

COMPUTATION SHEET

| PROJECT BAYOU METO | PAGE 2 OF 2 | COMPUTED BY | DATE |
|---|---|---|---|
| SUBJECT LITTLE BAYOU METO PUMP STATION BEARING CAPACITY | | CHECKED BY | DATE |

3000 CFS

@ EL 142 silty sand foundation

$\phi = 30$ $c = 0'$ $\gamma' = 120 - 62.4 = 57.6$ pcf $= 0.0576$ kcf

$N_c = 37.16$ $N_\gamma = 19.7$ $N_q = 22.46$ $D = 3.5'$ embedment

ASSUME NO INCLINATION & NO ECCENTRIC LOAD

$\zeta_c = 1 + 0.2\left[\tan\left(45 + \frac{30}{2}\right)\right]\frac{3.5}{93.5}$

$\zeta_c = 1.01$

$\zeta_\gamma = 1 + 0.1\left[\tan\left(45 + \frac{30}{2}\right)\right]\frac{3.5}{93.5}$

$\zeta_\gamma = 1.01$

$\zeta_q = \zeta_\gamma = 1.01$

mat reduction factor

$r_\gamma = 1 - .25 \log \frac{93.5}{6}$

$r_\gamma = 0.70$

$q_u = 0(37.16)1.01 + (.7)\frac{1}{2}(93.5).0576(19.7)1.01 + 3.5(0.0576)22.46(1.01)$

$q_u = 0 + 37.5 + 4.6$

$q_u = 42.1$ ksf

Structure Wt. $= 2.9$ ksf

Factor of Safety $= \frac{42.1}{2.9} = 14.5 > 3$ ∴ adequate

FROM TABLE 4-2 MAX CAPACITY FOR 10" SCREEN IS 600gpm

∴ MINIMUM NUMBER OF WELLS IS $\frac{9778}{600} = 16.2$ SAY 16

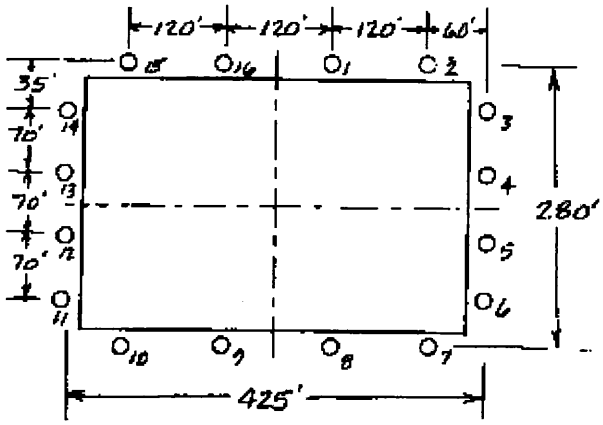


| WELL | R ft | $r_i$ ft | $\ln\left(\frac{R}{r_i}\right)$ |
|---|---|---|---|
| 1 | 3600 | 152 | 3.16 |
| 2 | 3600 | 228 | 2.76 |
| 3 | 3600 | 237 | 2.72 |
| 4 | 3600 | 215 | 2.82 |
| | | | 11.46 |

USE FULLY PENETRATING WELLS

$$\text{Flow/Well} = \frac{9778}{16} = 611 \text{ gpm} \times .1337 \frac{ft^3}{gal} = 82 \text{ cfm}$$

FOR 4 WELLS

$$H - h_c = \frac{\sum Q_{wi} \ln\left(\frac{R}{r_i}\right)}{2\pi k D} = \frac{82\,(11.46)}{2\pi\,(.1772)\,82} = 10.29'$$

FOR 16 WELLS

$$H - h_c = 4(10.29) = 41.16'$$

$$h_c = 182 - 41.16 = 140.84 \approx \text{EL } 140.7' \text{ OK}$$

USE 16 10" WELLS w/ 85' screen w/ 40' RISER

HEADER PIPE ≈ 1500'

| PROJECT | BAYOU METO | PAGE 1 OF 7 | COMPUTED BY | DATE 28 MAY 02 |
|---|---|---|---|---|
| SUBJECT | LITTLE BAYOU METO DEWATERING ESTIMATE | | CHECKED BY | DATE |

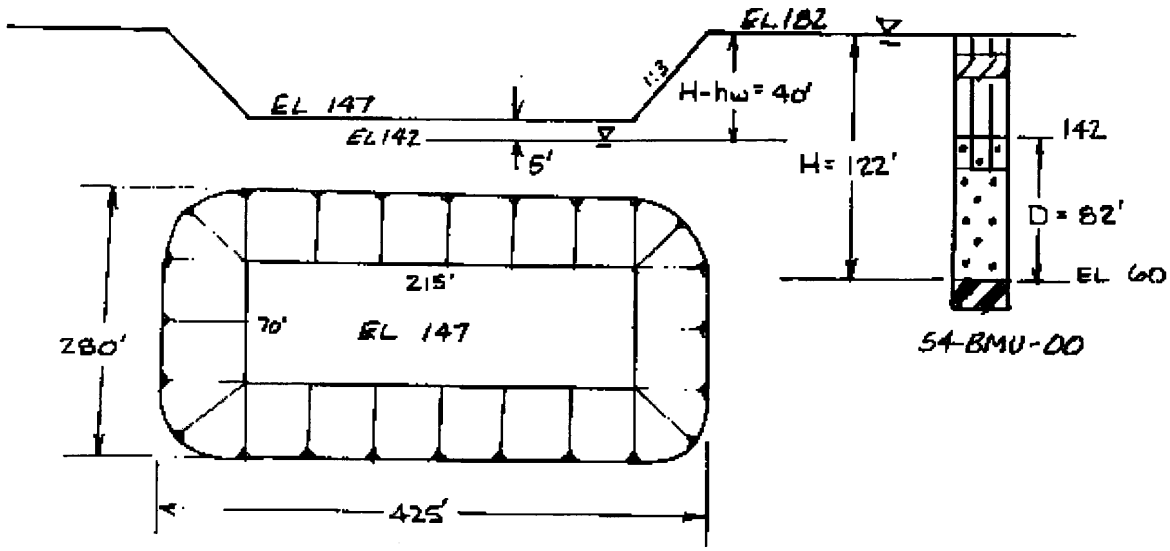


ASSUME PROTECTION TO WATER LEVEL OF EL 182 CIRCULAR SOURCE ARTESIAN

10" well screen
20" dia. hole ∴ $r_w = 1.7'$

$k_f = 900 \times 10^{-4}$ cm./sec $\times$ 1.969 = 0.1772 ft/min

$$A_e = \frac{4}{\pi}\sqrt{b_1 b_2}$$

$$A_e = \frac{4}{\pi}\sqrt{\frac{280}{2} \times \frac{425}{2}} = 220'$$

FROM FIG 4-23 $\quad R = C(H-h_w)\sqrt{k}$

$C = 3$ for wells $\quad R = 3(40)\sqrt{900} = 3600'$

$Q_t$ for $r_w = A_e$

FIG 4-10 TOTAL FLOW $\quad Q_t = \dfrac{2\pi k D (H-h_w)}{\ln(R/r_w)}$

$$Q_t = \frac{2\pi(.1772)\,82\,(40)}{\ln\left(\frac{3600}{220}\right)} = 1307 \text{ cfm}$$

$$Q_t = 1307 \text{ cfm} \times 7.481 \frac{\text{gal}}{\text{ft}^3} = 9778 \text{ gpm}$$

PROTECTION TO DESIGN FLOW ON THE ARKANSAS RIVER EL 199

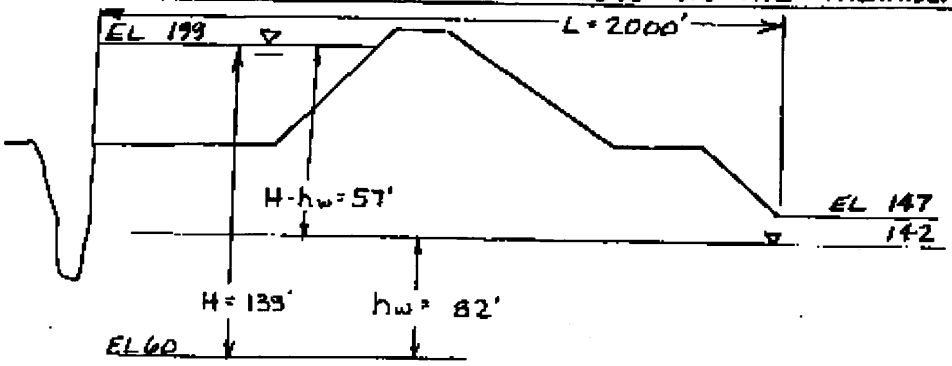


LINE SOURCE @ 2000'

FIG 4-23 $R = C(H-h_w)\sqrt{k}$

$R = 3(57)\sqrt{900}$

$R = 5130'$

CHECK FOR CIRCULAR SOURCE FIG 4-17

$2L = 2(2000) = 4000 < 5130'$ ∴ USE LINE SOURCE

ARTESIAN FLOW TOTAL $= \dfrac{2\pi k D (H-h_w)}{\ln\left(\frac{2L}{r_w}\right)}$

$$Q_T = \frac{2\pi(.1772)82(57)}{\ln\left[\frac{2(2000)}{220}\right]}$$

$Q_T = 1794$ cfm

$Q_T = 1794 \text{ cfm} \times 7.481 \frac{gal}{ft^3} = 13{,}421$ gpm

GRAVITY FLOW TOTAL $= \dfrac{\pi k (H^2 - h_w^2)}{\ln\left(\frac{2L}{r_w}\right)}$

$$Q_T = \frac{\pi(.1772)(139^2 - 82^2)}{\ln\left[\frac{2(2000)}{220}\right]}$$

$Q_T = 2{,}418$ cfm

$Q_T = 2{,}418 \text{ cfm} \times 7.481 \frac{gal}{ft^3} = 18{,}089$ gpm

LIMITING FLOW DUE TO AQUIFER

limiting flow/ft of screen for $k = 900 \times 10^{-4}$ cm/sec = .1772 ft/min

10" screen  20" dia hole  1.7'

$$q_c = \frac{2\pi r_w \sqrt{k}}{1.07} \times 7.48 \frac{gpm}{ft\ of\ screen}$$

$$q_c = \frac{2\pi (1.7\ ft) \sqrt{0.1772\ ft/min}}{1.07} \times 7.48 \frac{gpm}{ft\ of\ screen}$$

$$q_c = 31.4\ gpm/ft\ screen$$

for 600 gpm $\frac{600}{31.4}$ = 19.1 ft of wetted screen req'd

12" screen  22" hole  1.8'

$$q_c = \frac{2\pi (1.8) \sqrt{.1772}}{1.07} \times 7.48 = 33.3\ gpm/ft$$

ft wetted screen req'd for 1200 gpm = $\frac{1200\ gpm}{33.3\ gpm/ft}$ = 36 ft.

14" screen  24" hole  2'

$$q_c = \frac{2\pi (2) \sqrt{.1772}}{1.07} \times 7.48 = 37.0\ gpm/ft$$

ft wetted screen req'd for 1800 gpm = $\frac{1800}{37.0}$ = 47 ft

# LIMITING FLOW DUE TO WELL SCREEN

limiting flow per ft of screen for 20 slot stainless V wire rod base by Johnson 0.1 ft/sec

10" screen

60 x .31 = 18.6 gpm/ft

for 600 gpm $\frac{600}{18.6}$ = 33' screen req'd

12" screen

57 x .31 = 17.7 gpm/ft

for 1200 gpm $\frac{1200}{17.7}$ = 68' ft wetted screen req'd

14" screen

62 x .31 = 18.6 gpm/ft

for 1800 gpm $\frac{1800}{18.6}$ = 97 ft wetted screen req'd < 82 avail

not enough wetted screen for 1800 gpm pump
∴ use 12" well

| PROJECT Bayou Meto | PAGE 6 OF 7 | COMPUTED BY | DATE |
|---|---|---|---|
| SUBJECT Little Bayou Meto Pump Station Dewatering | | CHECKED BY | DATE |

12" well fully penetrating
22" diameter bore hole 1.8'
1200 gpm pump

$\# \text{ wells} = \frac{18{,}089}{1200} = 15$

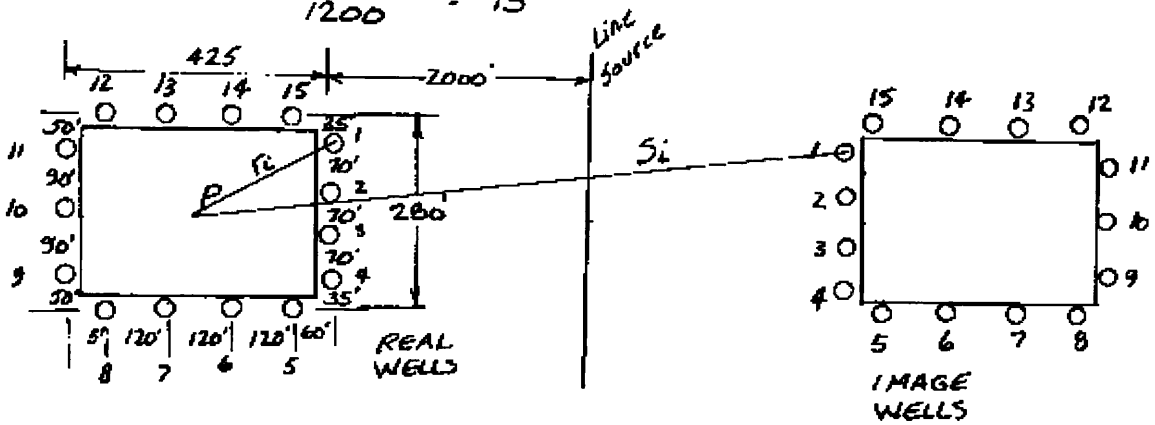


| well | $s_i$ | $r_i$ | $\ln \frac{s_i}{r_i}$ |
|---|---|---|---|
| 1 | 4214 | 237 | 2.88 |
| 2 | 4213 | 215 | 2.98 |
| 3 | 4213 | 215 | 2.98 |
| 4 | 4214 | 237 | 2.88 |
| 5 | 4275 | 207 | 3.03 |
| 6 | 4398 | 144 | 3.42 |
| 7 | 4515 | 165 | 3.31 |
| 8 | 4635 | 250 | 2.92 |
| 9 | 4638 | 231 | 3.00 |
| 10 | 4637 | 213 | 3.08 |
| 11 | 4638 | 231 | 3.00 |
| 12 | 4635 | 250 | 2.92 |
| 13 | 4515 | 165 | 3.31 |
| 14 | 4398 | 144 | 3.42 |
| 15 | 4275 | 207 | 3.03 |
| | | | 46.16 |

| PROJECT | BAYOU METO | PAGE 7 OF 7 | COMPUTED BY | DATE |
|---|---|---|---|---|
| SUBJECT | LITTLE BAYOU METO PUMP STATION DEWATERING | | CHECKED BY | DATE |

FIG 4-18 $F_p' = \Sigma Q_{wi} \ln \frac{S_i}{r_i}$ $\qquad Q_{wi} = \frac{18{,}082}{15} = 1206 \text{ gpm} = 161 \text{ cfm}$

$F_p' = 161 \ (46.16) = 7432$

drawdown $H^2 - h_p^2 = \frac{F_p'}{\pi k}$

$H^2 - h_p^2 = \frac{7432}{\pi \ (.1772)} = 13{,}350$

$139^2 - h_p^2 = 13{,}350$

$h_p = \sqrt{19{,}321 - 13{,}350}$

$h_p = 77'$

$\therefore$ elev. $60 + 77 = 137 < 142 \therefore$ adequate

use 15 - 12" wells w/ 80' screen and 42' riser

COMPUTATION SHEET

| PROJECT | BAYOU METO PUMPING STATION | PAGE OF | COMPUTED BY | DATE |
|---|---|---|---|---|
| SUBJECT | 1000 CFS | | CHECKED BY | DATE |

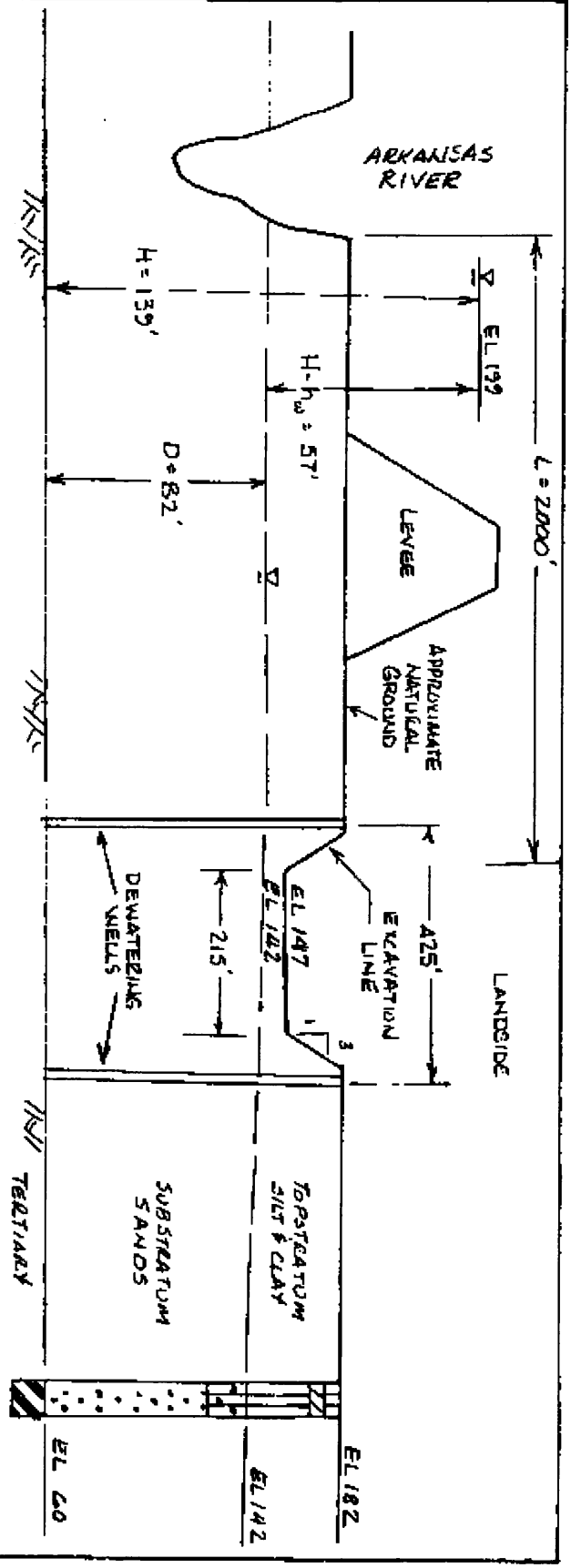


SECTION SHOWN IS PARALLEL WITH INLET CHANNEL THROUGH CENTER OF THE EXCAVATION AND PUMPING STATION

54-BMU-00

COMPUTATION SHEET

| PROJECT | BAYOU METO | PAGE OF | COMPUTED BY | DATE |
|---|---|---|---|---|
| SUBJECT | TRUCK BAY PILES | | CHECKED BY | DATE |

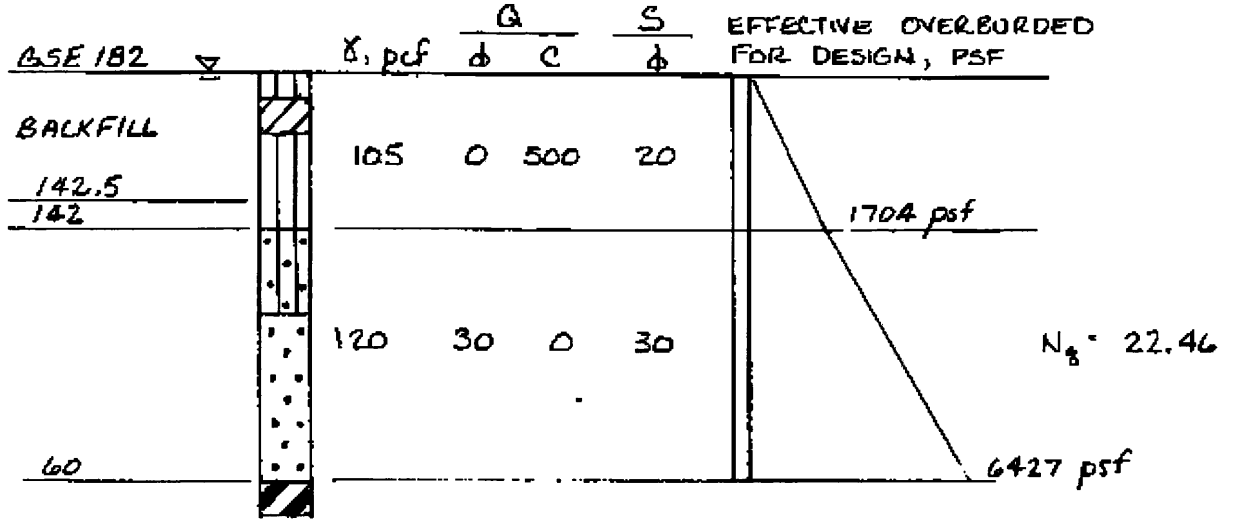


54-BMU-00

Assume watertable at ground surface and K = 0.5 from TM 5-818-1 para 11-6

$\sigma'_{142}$ = (182-142)(105-62.4) = 1704 psf

$\sigma'_{60}$ = (142-60)(120-62.4) + 1704 = 6427 psf

FOR 2' diameter concrete piles

end area, $A_p = \pi r^2 = \pi 1^2 = 3.14\ ft^2$

circumference, $A_c = \pi d = \pi(2) = 6.28$ ft

S case

$$Q_u = \underbrace{\Sigma A_c L K \left[(z\gamma') + \tfrac{1}{2}(L\gamma')\right] \tan\phi}_{\text{friction developed in clay}} + \underbrace{A_p (\Sigma \gamma' z) N_q}_{\text{point bearing in sand}}$$

$$+ \underbrace{A_c P K \left[z\gamma' + \tfrac{1}{2} P\gamma'\right] \tan\phi}_{\text{friction in sand}}$$

@ EL 142 $Q_u$ = 3.14 (1704) 22.46 = 120,174 lbs neglecting adhesion in clay

FOR FS = 3 $Q_a = \frac{120,174}{3}$ = 40,058 lbs

COMPUTATION SHEET

| PROJECT | Bayou Meto | PAGE 1 OF 3 | COMPUTED BY | DATE |
|---|---|---|---|---|
| SUBJECT | Salt Bayou Weir Dewatering | | CHECKED BY | DATE |

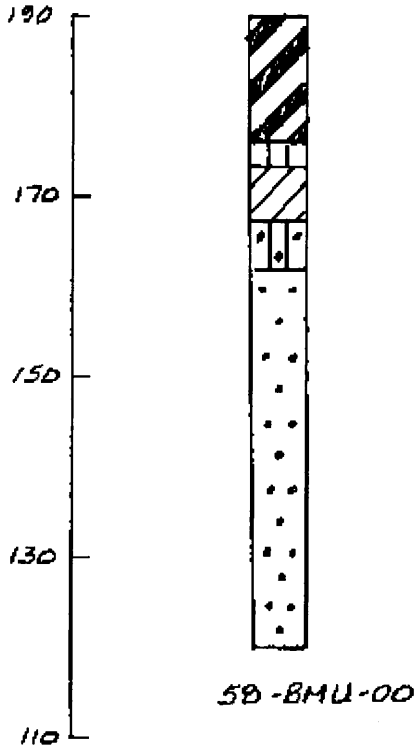


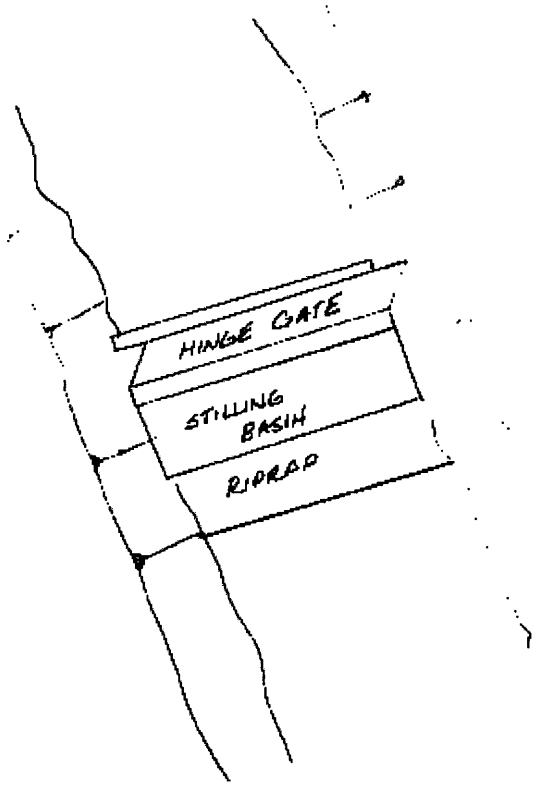


TERTIARY @ ELEV. 100 FROM GEOLOGIC MAPS

PERMEABILITY

20' @ $\frac{.1736 + .1696}{2} = .1716$

41' @ $\frac{.2336 + .2503}{2} = .2420$

$$D_{10} = \frac{20 \times .1716 + 41 \times .2420}{61} = .2189$$

FROM FIG 3-4 TM 5-818-5

$k = 1800 \times 10^{-4}$ cm/sec

| PROJECT | BAYOU METO | PAGE 2 OF 3 | COMPUTED BY | DATE 23MAY02 |
|---|---|---|---|---|
| SUBJECT | SALT BAYOU WEIR DEWATERING ESTIMATE | | CHECKED BY | DATE |

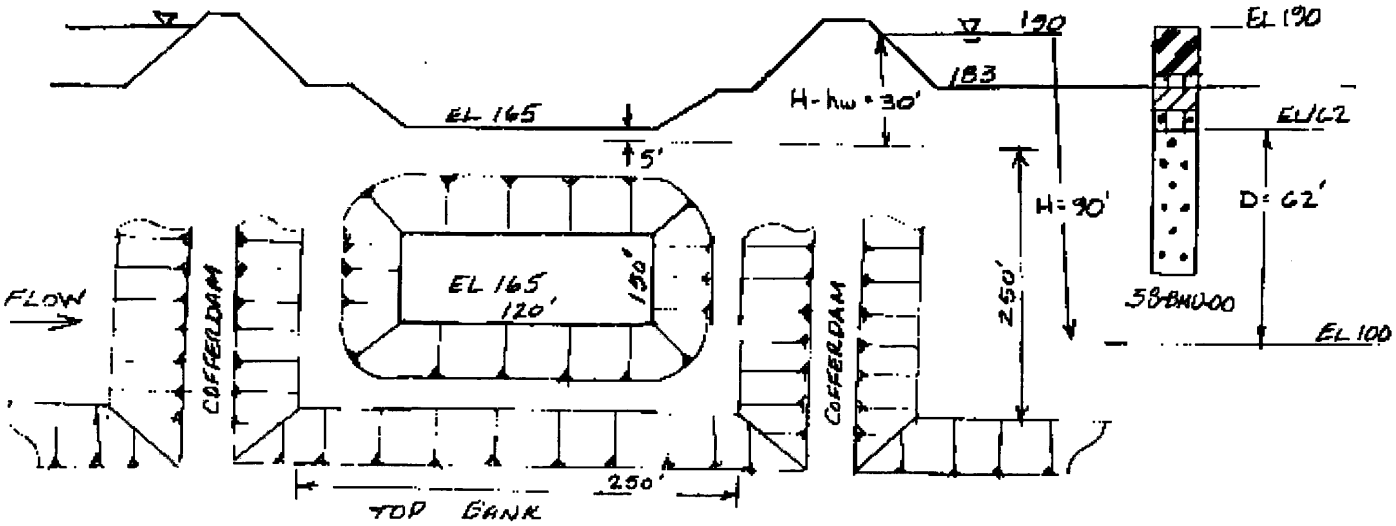


ASSUME PROTECTION TO WATER LEVEL OF EL. 190

10" well screen $k = 1800 \times 10^{-4}$ cm/sec $\times 1.969 = .3544$ ft/min

20" dia hole $\therefore r_w = 1.7'$

$$A_e = \frac{4}{\pi}\sqrt{\frac{250}{2} \times \frac{250}{2}} = 159'$$

FROM FIG. 4-23 $R = C(H-h_w)\sqrt{k}$

C = 3 FOR WELLS $R = 3\,(30)\sqrt{1800} = 3818$

$Q_t$ for $r_w = A_e$

$$\text{TOTAL FLOW}, Q_t = \frac{2\pi k D (H-h_w)}{\ln\left(R/r_w\right)}$$

$$Q_t = \frac{2\pi(.3544)62(30)}{\ln\left(\frac{3818}{159}\right)} = 1303 \text{ cfm} = 9748 \text{ gpm}$$

FROM TABLE 4-2 MAX. CAPACITY 600 gpm

$\therefore$ MIN # OF WELLS = 9748 ÷ 600 = 16.2 USE 16

LIMITING FLOW/FT SCREEN EQ. 4-1 $q_c = \frac{2\pi r_w\sqrt{k}}{1.07} \times 7.48 \times 1.2 = 53.3$ gpm/ft

| PROJECT BAYOU METO | PAGE 3 OF 3 | COMPUTED BY | DATE |
|---|---|---|---|
| SUBJECT SALT BAYOU WEIR DEWATERING | | CHECKED BY | DATE |

$$q_c = \frac{2\pi(1.7)\sqrt{.3544}}{1.07} \times 7.48 \times 1.20 = 53.3 \text{ gpm/ft screen}$$

for 600 gpm minimum screen = 600 ÷ 53.3 = 11.3

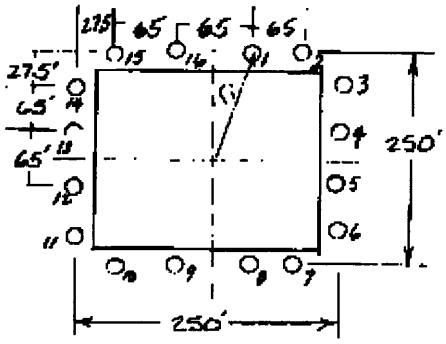


| Well | R, ft | $r_i$, ft | $\ln \frac{R}{r_i}$ |
|---|---|---|---|
| 1 | 3818 | 129 | 3.39 |
| 2 | 3818 | 159 | 3.18 |
| 3 | 3818 | 159 | 3.18 |
| 4 | 3818 | 129 | 3.39 |
| | | | Σ = 13.14 |

USE FULLY PENETRATING WELLS 60'

$$\text{FLOW/WELL} = \frac{7412}{16} = 588 \text{ gpm} \times .1337 \frac{ft^3}{gal} = 79 \text{ cfm}$$

FOR 4 wells

$$H - h_c = \frac{\Sigma Q_{wi} \ln \frac{R_i}{r_i}}{2\pi k D} = \frac{79(13.14)}{2\pi(.3544)62} = 7.52 \text{ ft}$$

FOR 16 wells

$H - h_c = 4(7.52) = 30.08'$

$h_c = 190 - 30.08 = 159.92$ < el 160 ∴ OK

USE 16 10" wells w/ 60' screen w/ 25' riser

HEADER PIPE ≈ 1000'

COMPUTATION SHEET

| PROJECT | BAYOU METO | PAGE OF | COMPUTED BY | DATE |
|---|---|---|---|---|
| SUBJECT | SALT BAYOU WEIR DEWATERING ESTIMATE | | CHECKED BY | DATE |

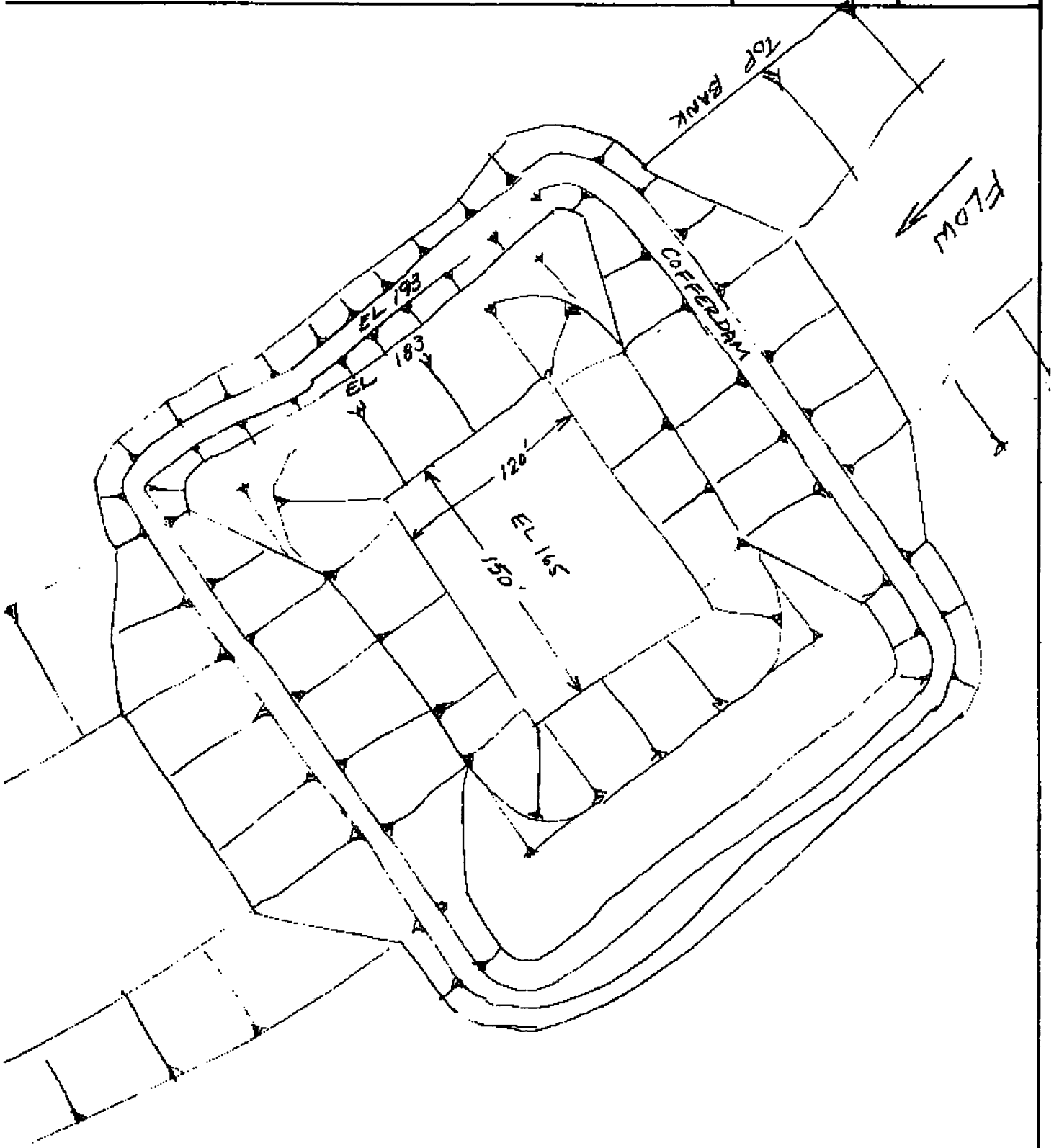

COMPUTATION SHEET

| PROJECT | BAYO METO | PAGE OF | COMPUTED BY | DATE |
|---|---|---|---|---|
| SUBJECT | SALT BAYOU WEIR DEWATERING ESTIMATE | | CHECKED BY | DATE |

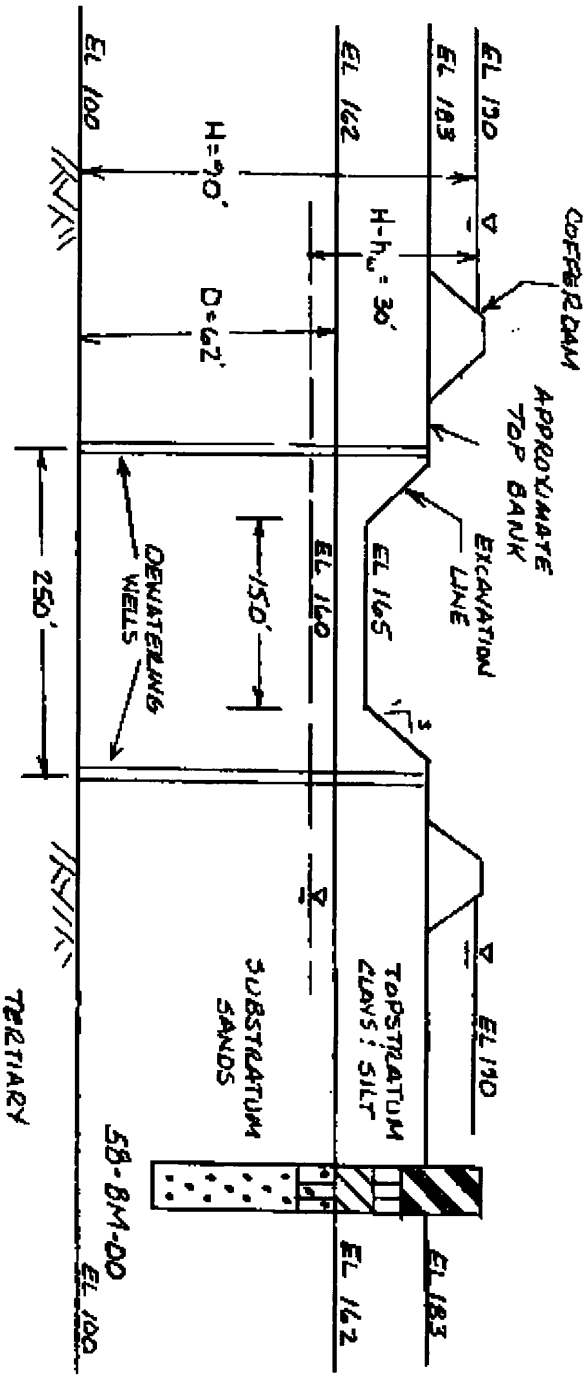


SECTION SHOWN IS ACROSS SALT BAYOU THROUGH THE WEIR

| PROJECT BAYOU METO | PAGE 1 OF 2 | COMPUTED BY | DATE 29 MAY 02 |
|---|---|---|---|
| SUBJECT DRY BAYOU WEIR DEWATERING ESTIMATE | | CHECKED BY | DATE |

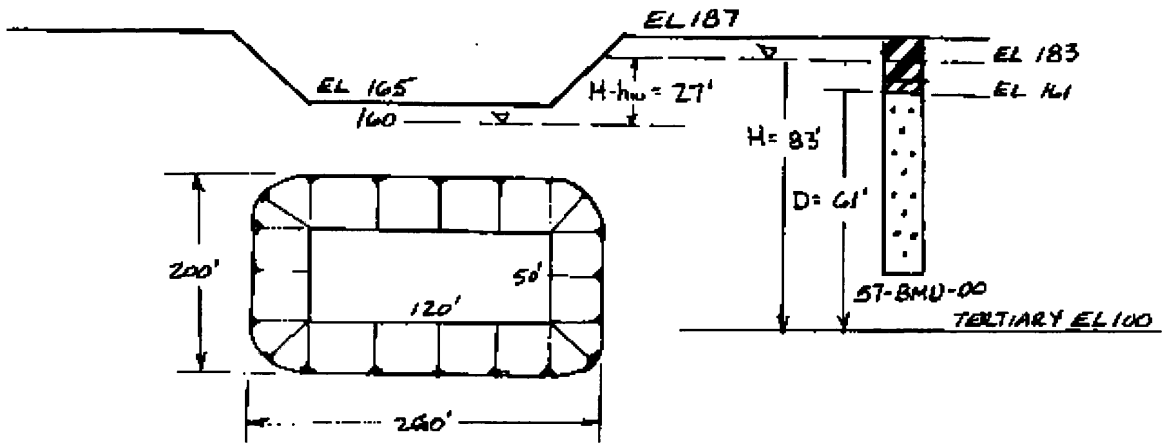


ASSUME LEVEL OF PROTECTION TO ELEV. 183

10" well screen

20" dia. hole ∴ $r_w = 1.7'$

$k_f = 1800 \times 10^{-4}$ cm/sec = 1.3544 ft/min (same as Salt Bayou)

$$A_e = \frac{4}{\pi}\sqrt{\frac{200}{2} \times \frac{260}{2}} = 145'$$

$$R = 3(27)\sqrt{1800} = 3436$$

$Q_e$ for $r_w = A_e$

$$\text{TOTAL FLOW} = \frac{2\pi(1.3544)\,61\,(27)}{\ln\left(\frac{3436}{145}\right)} = 1159 \text{ cfm} = 8670 \text{ gpm}$$

10" well maximum capacity is 600 gpm

∴ number of wells req'd = $\frac{8670}{600} = 15$ try 16

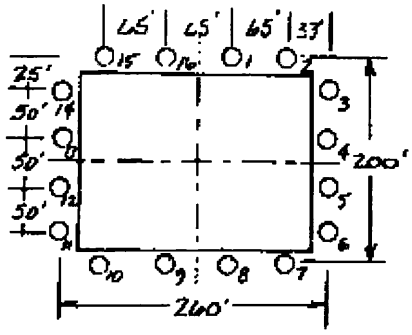


| Well | R, ft | $r_i$, ft | $\ln \frac{R}{r_i}$ |
|---|---|---|---|
| 1 | 3436 | 105 | 3.49 |
| 2 | 3436 | 140 | 3.20 |
| 3 | 3436 | 150 | 3.13 |
| 4 | 3436 | 133 | 3.25 |
| | | | 13.07 |

| PROJECT BAYOU METO | PAGE 2 OF 2 | COMPUTED BY | DATE |
|---|---|---|---|
| SUBJECT DRY BAYOU WEIR DEWATERING | | CHECKED BY | DATE |

FULLY PENETRATING WELLS

$$\text{FLOW/WELL} = \frac{8670}{16} = 542 \text{ gpm} \times .1337 \frac{ft^3}{gal} = 72.5 \text{ cfm}$$

FOR 4 WELLS

$$H - h_c = \frac{\Sigma Q_{wi} \ln \frac{R_i}{r_i}}{2\pi k D} = \frac{72.5(13.07)}{2\pi(.3544)\,61} = 6.98'$$

FOR 16 WELLS

$$H - h_c = 4(6.98) = 27.92'$$

$$h_c = 183 - 27.92 = 155.08 < \text{EL } 160 \therefore \text{OK}$$

USE 16 10" wells w/61' screen and 26' riser
≈ 1000' header pipe

COMPUTATION SHEET

| PROJECT | BAYOU METO | PAGE OF | COMPUTED BY | DATE |
|---|---|---|---|---|
| SUBJECT | DRY BAYOU WEIR | | CHECKED BY | DATE |

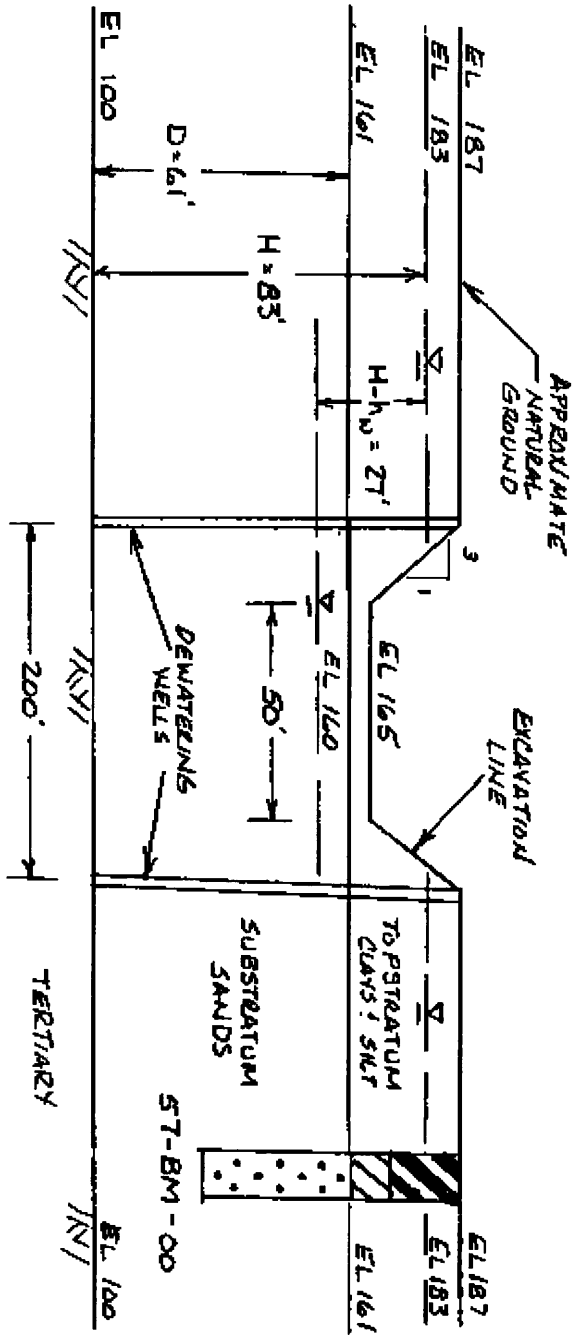


SECTION SHOWN IS ACROSS DRY BAYOU THROUGH THE WEIR

# BAYOU METO COMPREHENSIVE STUDY
# BAYOU METO BASIN, ARKANSAS

## APPENDIX C

## ENGINEERING INVESTIGATIONS & ANALYSES
## FLOOD CONTROL COMPONENT

## SECTION III

## WATER QUALITY ASSESSMENT

Appendix C - Engineering Investigations & Analyses
Flood Control Component

Section III - Water Quality Assessment

TABLE OF CONTENTS


| Paragraph | Title | Page No. |
|---|---|---|
| III-1 | General | III-1 |
| III-2 | Project Description | III-1 |
| III-3 | Historic & Existing Water Quality | III-2 |
| III-4 | USGS & ADEQ Water Quality Data | III-2 |
| III-5 | USGS & ADEQ Metals Data | III-4 |
| III-6 | USGS & ADEQ Pesticide Data | III-5 |
| III-7 | Vicksburg District Water Quality Data | III-5 |
| III-8 | Vicksburg District Metals Data | III-6 |
| III-9 | Historic Sediment Quality Data Review | III-6 |
| III-10 | Historic Dioxin Contamination In Bayou Meto Sediments | III-6 |
| III-11 | Existing Sediment Quality Data Review | III-7 |
| III-12 | Summary | III-8 |
| III-13 | Water Quality Impacts | III-10 |
| III-13-a | Levee Construction | III-11 |
| III-13-b | Channel Excavation & Selective Clearing | III-11 |
| III-13-c | Channel Excavation for Bayou Meto Bypass Channel in Reach 3 | III-12 |
| III-13-d | Construction of Low Water Weirs | III-12 |
| III-13-e | Construction of Pumping Plants | III-12 |
| III-13-f | Operation of Pumping Plants | III-13 |
| III-14 | References. | III-13 |

Appendix C - Engineering Investigations & Analyses
Flood Control Component

## Section III - Water Quality Assessment

III-1. General. The Bayou Meto Basin, Arkansas Project area is located in east central Arkansas and includes portions of Lonoke, Jefferson, Prairie, Pulaski and Arkansas counties. The project area encompasses 779,109 acres lying generally south of Interstate 40, between the Arkansas and White Rivers. Tributaries of the Arkansas River provide natural drainage to the project area. Major tributaries include Bayou Meto, Two Prairie Bayou, Indian Bayou and Little Bayou Meto. Smaller tributary systems include Wabbaseka Bayou, Baker's Bayou, Salt Bayou Ditch, Big Ditch and Crooked Creek. Some 396,874 acres of the project area are irrigated and 22,942 are in commercial fishponds. Primary crops include rice, soybeans, cotton, wheat and baitfish. Currently, agriculture relies heavily on the Mississippi River Valley alluvial aquifer as the primary source of irrigation water. However, groundwater is being withdrawn at such a rate that the aquifer is in danger of being permanently damaged. Surface stream flows can become inadequate to support fish and wildlife during the summer months due to the lack of rainfall and withdrawals for crop irrigation. Agricultural flooding is a major problem at other times of the year. The Bayou Meto Basin Project is twofold. One goal is to relieve the strain on the aquifer by supplying irrigation water from the Arkansas River through a series of new canals, improved existing channels and pipelines. The second goal is to provide flood control to the low-lying regions in the project area. This section of the report addresses the existing water quality conditions within the project area and evaluates project impacts to water quality as a result of flood control improvements.

III-2. Project Description. Alternatives considered for the Bayou Meto Flood Control Study are described in detail in other sections of this document. They include plans to provide some flood relief for the most frequently flooded reaches while giving full consideration to environmental resources. Streams identified for work include: Indian Bayou, Indian Bayou Ditch, Wabbaseka Bayou, Boggy Slough, Little Bayou Meto, Salt Bayou, Crooked Creek Ditch, Crooked Creek, Two Prairie Bayou and Big Bayou Meto. Work includes

selective excavation of stream bottoms, selective clearing and snagging, selective cutting of stream banks, construction of levees, construction of low water weirs and construction of pumping stations.

III-3. Historic and Existing Water Quality. The project area is located within three USGS Hydrologic Units (HU): the Lower Arkansas River (HUC 08020401) containing Wabbaseka Bayou; Bayou Meto and its tributaries (HUC 08020402); and, the Lower Arkansas-Maumelle (HUC 11110207), the source water for the water supply project. These three Hydrologic Units lie within the Arkansas Delta Ecoregion. A review of the 2002 State of Arkansas Integrated Water Quality Monitoring and Assessment Report indicates that the Arkansas Department of Environmental Quality (ADEQ) has designated the waters within the project area as suitable for the propagation of fish and wildlife; primary and secondary contact recreation; and, public, industrial and agricultural water supplies. Although there is some concern for elevated bacteria and nutrients in Wabbaseka Bayou and high turbidity in the Arkansas River, all designated uses are being maintained in these waters. The upper reach (007) of Bayou Meto is under a fish consumption advisory due to the presence of dioxin in fish tissue. ADEQ states that the source, residue from Vertac, Inc., a Superfund site, has been removed and that contamination downstream is being addressed through natural attenuation.

To evaluate the water quality within the project area, water quality data were retrieved from the USGS NWIS Web Database and the ADEQ Surface Water Quality Monitoring Database. Surface water data from two stations located on the Arkansas River at Terry Lock and Dam just below the planned water supply intake and groundwater data from the ADEQ Lonoke Monitoring Area are also included in the analysis. Table 1 on page III-17, lists the stations and periods of record for the resulting data set. In addition, the Vicksburg District Corps of Engineers (MVK) collected water and sediment data from the Bayou Meto project area in August, 2000 and January, 2001. These sampling stations are listed in Table 2 on page III-18. Station locations are also indicated on the project area map in Figure 1 on page III-15.

III-4. USGS and ADEQ Water Quality Data. The data from the USGS and ADEQ are summarized in Tables 3 through 6, presented on pages III-19 through III-22. These tables

report the number of samples analyzed from each site and the minimum, mean and maximum concentrations compared to state criteria. Data from each stream were grouped to simplify analysis. The groups, indicated next to the station number in Table 1 on page III-17, are: 1) Bayou Meto (BM), 2) Bayou Meto Urban (BMU), 3) Two Prairie Bayou (TPB), 4) Crooked Creek (CC), 5) Wabbaseka Bayou (WAB) and 6) Arkansas River (AR). The four stations in the Bayou Meto Urban group are outside the project area but are included for comparison as source water to the basin.

Water quality and nutrient data are summarized in Table 3 on page III-19. In general, many of these parameters exhibit seasonal cycles. Mean water temperatures were similar, 17 to 19 degrees Centigrade (C) for all streams, although the maximum temperature criterion of 32°C was exceeded slightly in Bayou Meto and the Arkansas River at least once. Mean pH measurements were between 6.9 and 7.7 SU with maxima at or below the 9.0 SU criterion. Minimum values < 6.0 SU were reported in the Bayou Meto Urban, Bayou Meto, Two Prairie Bayou and Arkansas River groups. All groups reported low values for dissolved oxygen (DO) during late summer at least once during the period of record. Mean DO values were 5.3 mg/l or lower with the exception of the Arkansas River stations. Of the three groups with similar number of measurements, Bayou Meto had the most variability in DO.

Mean turbidities for Bayou Meto Urban, Two Prairie Bayou and Arkansas River were less than 45 NTU, the criterion for the Delta Ecoregion least-altered streams. However, all streams exceeded the 100 NTU storm flow criterion of 100 NTU at least once during the period of record. Figure 2 on page III-16, shows the typical periodicity seen in the water quality data in the basin. Turbidity concentrations (Figure 2a on page III-16) were typically higher in the first 6 months of the year when rain runoff was likely. The majority of TDS measurements exceeding the 390 mg/l Ecoregion criterion were collected before 1995. Samples collected outside the project area in the Bayou Meto Urban and Arkansas River groups had the highest TDS. The Arkansas River group had the highest mean concentration. TDS also exhibited seasonal cycles (Figure 2b on page III-16), with concentrations reaching their maxima during the late fall. Similarly, soluble salts also peaked at this time. While all groups except Crooked Creek had data greater than the 36 mg/l criterion for chloride, Arkansas

River had the only mean exceeding 36 mg/l. The Arkansas River had the highest sulfate mean and maximum concentrations (both exceeding the 28 mg/l criterion). All groups except Crooked Creek had maxima exceeding 28 mg/l.

Nitrogen and phosphorus species are represented by nitrate/nitrite (NO3-N) and total phosphorus (TP) in Figure 2c on page III-16. Peak concentrations for these nutrients occurred during the first six months of the year, probably moving into streams in rain runoff. Means for nitrogen and phosphorus species were generally highest in the Bayou Meto Urban and Two Prairie Bayou groups. The Arkansas River group had the lowest mean for ammonia (0.071 mg/l), the lowest mean for TKN (0.713 mg/l), and the next lowest mean for nitrate/nitrite (0.327 mg/l). Bayou Meto Urban and Two Prairie Bayou maximia exceeded the 1.6 mg/l chronic aquatic life criterion for ammonia at least once during the period of record. ADEQ recommends using 0.1 mg/l as a guideline for assessing TP data. The means for all groups exceeded this value. The minimum value for Wabbaseka Bayou also exceeded 0.1 mg/l TP. While orthophosphate does not have criteria, mean concentrations for all groups except Arkansas River were greater than 0.1 mg/l. The fecal coliform criterion for secondary contact waters is 1000 / 100 ml of water. None of the means exceeded that value; however, the maxima for all groups except Wabbaseka Bayou did exceed it. The fecal coliform maximum for Arkansas River was an order of magnitude greater than that of the other streams. Only Bayou Meto and Bayou Meto Urban had fecal coliform means that did not exceed the 200/100 ml criterion for primary contact waters.

III-5. <u>USGS and ADEQ Metals Data</u>. Similarly, Table 4 on page III-20 summarizes the combined ADEQ and USGS metals data. Both acute and chronic exposure limits are utilized when evaluating aquatic life protection criteria for metals in water. Where required, criteria were calculated for a hardness of 50 mg/l and 100 mg/l. Data for Bayou Meto Urban, Bayou Meto and Two Prairie Bayou were compared to the 50 mg/l criteria. Data for Wabbaseka Bayou and the Arkansas River were compared to the 100 mg/l criteria. Bayou Meto had the highest mean values for aluminum, chromium, iron, mercury and selenium. Two Prairie Bayou had the highest mean values for copper, manganese and zinc. Wabbaseka Bayou had the highest mean values for arsenic, cadmium and nickel. The Arkansas River had the highest mean value for silver. No stream exceeded any criteria for

chromium, nickel and silver. All cadmium data from Wabbaseka Bayou exceeded the acute aquatic life criterion (CMC). Two Prairie Bayou had cadmium means exceeding the CMC. The Arkansas River cadmium means exceeded the chronic aquatic life criterion (CCC). Mean copper values exceeded the CCC for Bayou Meto Urban and the CMC for Bayou Meto and Two Prairie Bayou. Bayou Meto Urban, Bayou Meto and Two Prairie Bayou lead means exceeded the CCC. Bayou Meto Urban, Bayou Meto, Two Prairie Bayou and the Arkansas River mean mercury values all exceeded their CCC. No stream means exceeded any zinc or selenium criteria. Many of the metals, however, had maximum values exceeding their criteria briefly during the period of record.

III-6. USGS and ADEQ Pesticide Data. Pesticide and PCB data are summarized in Tables 5 and 6 on pages III-21 and III-22. The chlorinated pesticides listed in Table 5 are compared to their aquatic life criteria. Aldrin, DDE, DDT, dieldrin, endrin and toxaphene were detected in only a few samples from Bayou Meto Urban and Two Prairie Bayou. DDD was detected in one sample from Bayou Meto Urban at a concentration of 0.005 μg/l. This value exceeded the CCC for DDD. The Bayou Meto Urban means for dieldrin and endrin also exceeded their CCC values and the toxaphene, detected in both streams, exceeded its CMC. No chlorinated pesticides were detected in samples from Bayou Meto, Wabbaseka Bayou or the Arkansas River. The agricultural herbicides detected in the project area streams are listed in Table 6. These compounds are commonly used for either broad-leaf weed control or grassy weed control throughout the Delta Ecoregion on a variety of crops. Unlike the chlorinated pesticides, many of these compounds have short half-lives in the environment and are generally non-toxic to aquatic organisms. Bayou Meto had the highest number of samples with herbicide detections in the project area. Two Prairie Bayou had the fewest. Samples from the Arkansas River contained only low levels of 4 herbicides.

III-7. Vicksburg District (MVK) Water Quality Data. Nutrient data collected by MVK personnel in August 2000 and January 2001 are listed in Table 7 on page III-24. Generally, most of the data fell within the minimum/ maximum ranges developed from the combined USGS and ADEQ data. Total organic carbon (TOC), only collected in August, 2000, was the exception with values at least doubled the maximum concentrations seen in the combined dataset. Ammonia concentrations in samples collected by

the MVK did not exceed any aquatic life criteria. All but two of the TP samples did exceed the 0.1 assessment guideline. Seven of the nine samples collected in August, 2000 exceeded the Delta ecoregion criterion for chloride and three exceeded the sulfate criterion.

III-8. Vicksburg District (MVK) Metals Data. Data for trace metals in water are listed in Table 8 on page III-24. Most of the values are non detect and are given as < the detection limit. Of the detected metals, only lead in BM-14 (Indian Bayou) exceeded its chronic aquatic life (CCC) value. Results reported for copper, lead, selenium and silver in August, 2000 have detection limits above some of their criteria and could not be evaluated.

III-9. Historic Sediment Quality Data Review. No historic metals or pesticide sediment data were available from the ADEQ or USGS for the project study area.

III-10 Historic Dioxin Contamination in Bayou Meto Sediments. Historic sediment data were available for dioxin (2,3,7,8 TCDD) in Bayou Meto from samples in the early 1990s. The Vertac Chemical Corporation site, located on Rocky Branch Creek a tributary of Bayou Meto in Jacksonville, Arkansas, has a long history of herbicide production. In 1948, as Reasor Hill Company, the site began producing 2,4,5-T (dioxin is a by-product). In 1961, Hercules purchased the plant and produced Agent Orange. From 1971 to 1976, Transvall leased the plant and produced 2,4-D; 2,4,5-T; and 2,4,5-TP. Vertac organized in 1976 and in 1979 suspended production of 2,4,5-T and 2,4,5-TP. The site was placed on the NPL (Superfund) list in September 1983. All manufacturing operations at the site ceased in May 1986. In December 1986, the Potentially Responsible Party (PRP) began removal activities with EPA oversight; and, all site remedial construction activities were declared complete in September 1998. The site is considered 100% remediated but has not been delisted.

The ADH has been monitoring dioxin in fish tissue since the late 1970s. In 1980, a fish consumption advisory was issued for Bayou Meto below Vertac. Sediment samples collected for the US Fish and Wildlife Service (USFW) in 1991 showed dioxin concentrations well above background samples throughout Bayou Meto as far south as the Bayou Meto Wildlife Management Area (Table 12 on page III-28).

Background samples collected in other streams were below the detection limit.

There are no specific criteria to evaluate sediment data. At the time of the 1991 sampling, no screening guidelines existed for dioxin concentrations in sediment. More recently, sediment guidelines for organic compounds are being developed through the use of bioassays. The National Oceanic and Atmospheric Administration (NOAA) developed the upper effects threshold (UEL) presented in Table 12 on page III-28 from bioassays using *Hyalella azteca* and freshwater sediments. This guideline represents the concentration of dioxin above which adverse biological impacts would always be expected to *H. azteca* due to exposure to dioxin alone; although adverse impacts can occur below the UEL. In 1991, six of the twelve stations had sediment concentrations greater than the current UEL. Present day, in the 2002 Water Quality Inventory Report, ADEQ states that the source of the dioxin has been removed and that contamination downstream is being addressed through natural attenuation. As of October, 2002, the fish consumption advisory is still in place for Bayou Meto reach number 08020402-007 extending approximately 48 miles downstream of the original source to the Highway 13 Bridge. Based on new fish tissue data and recommendations from the US EPA, the ADH is considering extending the advisory downstream for some fish species.

III-11. Existing Sediment Quality Data Review. Sediment data from samples collected by the MVK in August, 2000 and January, 2001 were analyzed for metals, chlorinated pesticides, herbicides, PAHs and TOC. These data are presented in Tables 13 through 16 on pages III-29 through III-32. While there are no specific criteria to evaluate sediment data, NOAA has developed benchmark levels that can be used to screen sediment concentrations for some of these parameters. Two of the NOAA benchmarks are the Environmental Response-Low (ERL) and the Environmental Response-Median (ERM). The ERL and the ERM represent the $10^{th}$ and $50^{th}$ percentiles of contaminant concentrations that have elicited adverse biological responses. The ERL represents the value at which toxicity may begin to be observed in sensitive species. The ERM is the median concentration of toxic samples evaluated in the NOAA study. These NOAA benchmarks are based on data collected from marine studies, which limits their usefulness. However in the absence of specific criteria, they still provide a reasonable guide to use in comparing sediment data.

Positive results were reported for all of the metals except silver (Table 13 on page III-29). Reported concentrations exceeded the ERLs for arsenic in WB-02 and Indian Bayou-01 from the August, 2000 sampling and for nickel in BM-10 from the January, 2001 sampling. Table 13 also contains the mean concentration of metals found in the soils in the Eastern US by the US Geological Survey. The three samples exceeding the NOAA ERLs were also slightly above the USGS Earth's Crust averages but were well within the observed ranges.

Table 14 on page III-30, contains chlorinated pesticide and PCB data from samples collected in August, 2000. Positive results were found for the compounds beta-BHC, gamma-BHC, DDD, DDE, DDT, endosulfan sulfate and endrin. All of the samples with positive results for DDT and its derivatives exceeded either its corresponding ERL or ERM. There are no guidelines for the herbicides listed in Table 15 on page III-31. The only samples with positive results not qualified as less than the detection limit (J) or blank contaminated (B) were BM-10 (2,4,5-TP) and BM-11 (Dinoseb), both at low ppb concentrations. For the PAHs listed in Table 16 on page III-32, only Bayou Meto-1 from August, 2000 had 'J' concentrations for fluoranthene and pyrene. No concentrations exceeded any guidelines.

III-12. Summary. Concentrations of chemical parameters within the waters and sediments of the Bayou Meto project area exhibited patterns generally expected within historic agricultural regions. Within the Bayou Meto project area and excluding the Arkansas River, the urban areas, generally, had lower mean concentrations for turbidity, TDS, total suspended solids (TSS), chloride and sulfate. The more agricultural portions of Bayou Meto and Wabbaseka Bayou had the highest means for turbidity, conductivity, chloride, sulfate, TDS and TSS of the streams within the project area. Concentrations of dissolved solids represented by TDS, conductivity, sulfate and chloride peaked in the late summer when conditions were dry and water levels were generally low. Nitrogen, phosphorus, fecal coliform and turbidity concentrations peaked in the late winter and spring, probably coinciding with rainfall events. Each of these parameters exceeded its criterion at least once during the period of record; however, these occasions were of a temporal nature and concentrations probably did not remain elevated long after the associated

event ended. Samples collected from the Arkansas River had mean concentrations for TDS higher than the other groups. Mean concentrations for conductivity, fecal coliform and sulfate were at least two times higher than the other groups; and, mean concentrations for chloride were at least three times higher over the period of record.

Metals in Bayou Meto and Two Prairie Bayou, the longest streams, had similar mean concentrations. No stream exceeded any criteria for chromium, nickel and silver. Other dissolved metals with aquatic life criteria did exceed one of those values at least once during the period of record. Various streams within the project area had the highest means for all metals except silver, which was higher in the Arkansas River.

The ADEQ reported in its 2002 Water Quality Report that Bayou Meto had the highest number of pesticide detections per sampling event in the basin and that Wabbaseka Bayou at HW 79 had a high number as well. The insecticides aldrin, DDT and its derivatives, dieldrin, endrin and toxaphene were reported by the ADEQ and USGS in water samples from Bayou Meto Urban, Bayou Meto and Two Prairie Bayou. Water samples collected by the MVK also had traces of aldrin, BHC and endrin aldehyde in Bayou Meto, Wabbaseka Bayou and Indian Bayou. While no DDT or toxaphene was detected in the water, all sediment samples collected by MVK had DDT or its derivatives. Two Prairie Bayou, Bayou Meto, Wabbaseka Bayou, Indian Bayou Ditch and Crooked Creek sediment also had traces of endrin and BHC.

The ADEQ tested water samples from these streams for herbicides from 1995 to 2001. Herbicides detected include pre-emergent herbicides, and those associated with specific crops such as rice, cotton and soybeans. In the Mississippi Embayment Study by the USGS, concentrations of these types of herbicides showed distinct seasonal patterns that corresponded to the type of crop grown in the basin and the pesticide used on those crops. Concentrations of the detected herbicides in the Bayou Meto project area were generally in the low ppb ranges and, while not equally dispersed throughout the project area at the time of sampling, could certainly move and dilute within the steams of the basin after application. Water samples collected by the MVK from Two Prairie Bayou, Bayou Meto, Wabbaseka Bayou, Indian Bayou and Indian Bayou Ditch also had traces of 2,4-D; 2,4,5-T; 2,4-DB; and, Dinoseb. Sediment samples

had traces of 2,4,5-TP and Dinoseb. These samples were not analyzed for all of the herbicides listed by ADEQ.

Sediment downstream of the Vertac Chemical Corporation was contaminated with dioxin due to historic chemical manufacturing processes. Bayou Meto throughout most of its length was impacted by this contamination. Minimal sediment data exists for dioxin in Bayou Meto; however, data from 1992 indicate that at the I-40 and Highway 15 bridges, dioxin sediment concentrations were 39.7 and 46.0 ppt, respectively. Sediment concentrations decreased further downstream from the source to 4.2 ppt at Highway 152 and 1.4 ppt at Highway 11 below the Bayou Meto Wildlife Management Area. Elevated dioxin concentrations in fish caused the ADH to issue a fish consumption advisory in 1980. Today, the advisory extends to the Highway 13 Bridge; but, in the future may be extended downstream of this site for certain fish species. Although the dioxin source, the Vertac site, is considered 100% remediated it has not been delisted from the NPL.

The US EPA requires ongoing monitoring at the Vertac site and in the affected streams beyond to ensure that the site is being maintained correctly and that the public is sufficiently protected from dioxin. The required Bayou Meto fish monitoring program involves yearly samplings of fish tissue from set collection sites within the affected streams. Two of the fish monitoring stations lie within the Bayou Meto Project Area. BM 5.5 extends approximately 1.5 miles upstream from the I-40 Bridge. Another site, BM6, is approximately 2.5 miles in length and centered in the bend at the Highway 15 Bridge. The Bayou Meto bypass channel in the Reach 3 flood control alternative will cut into the stream in this portion of Bayou Meto.

III-13. Water Quality Impacts. The purpose of this section is to discuss anticipated water quality impacts associated with the project alternatives. Alternative 2 is broken out into construction activities for several reaches within the project area. Work consists mainly of selective clearing, excavation of streambeds, construction of low water weirs, construction of a bypass channel and bridge, and construction of a levee. Alternative 2A also includes an overlap between flood control and water supply in three reaches (Indian Bayou Ditch, Crooked Creek Ditch and Crooked Creek). Alternatives 3A and 3B call for construction of pumping stations.

III-13-a. Levee Construction. No direct impacts to water quality will likely result from the construction or modification of levees since the actual work involved would not be directly connected to the water. Soil erosion is likely to increase in the vicinity of the construction area due to the removal of vegetation and the placement of fill material. Runoff from the project area will be highly turbid and contain high concentrations of suspended solids. Indirect impacts to water quality of any water body receiving this runoff include increased turbidity and suspended solids. The effects of increased turbidities may include decreased light penetration, increased water temperatures and lowered DO. Erosion effects can be minimized through the development and proper implementation of the State required storm water plan. These impacts are anticipated to be short term and will decrease once vegetation has been reestablished along the affected area.

III-13-b. Channel Excavation and Selective Clearing. Direct impacts would tend to be immediate, localized and short term in duration. The physical process of channel and bank excavation would resuspend sediment, strip away existing aquatic habitat and bury or kill invertebrates. Net effects of this activity would be to increase water turbidities and lower and shift fish and invertebrate species composition. The effects of increased turbidities may include decreased light penetration, increased water temperatures and lowered DO concentrations. These impacts will be magnified if streams are stressed due to low water, late summer conditions. However, these impacts are anticipated to be short term and will decrease once construction ceases and vegetation has been reestablished along the project areas.

Indirect impacts of channel and bank excavation can be longer term. They can include the loss of stream habitat and long term increases in turbidity due to loss of stream bank vegetative cover and the erosion protection it provides during rain and flood events. Increased solids in the system can mean a redistribution of pollutants throughout the system. The flood control plan calls for minimal excavation in each reach to reduce this impact. Once vegetation has reestablished the potential for erosion will be reduced. For the metals and organic pesticides evaluated in this study, the concentrations and spatial distributions are similar throughout the system. Any

effects due to redistribution because of erosion should be minimal. For the dioxin contaminated sediments in upper Bayou Meto, the effects could be longer term.

III-13-c. Channel Excavation for Bayou Meto Bypass Channel in Reach 3. As discussed above in the Summary, the upper end of the bypass channel will be cut into an area that is one of the USEPA's dioxin fish monitoring sites and is known to have dioxin contamination in the sediment. Any excavation in this reach of Bayou Meto should be done with care to minimize or prevent the movement of contaminated sediment downstream or into other parts of the basin. Excavated sediment should be treated as contaminated and placed in capped, upland disposal sites where it cannot be reintroduced into the system. The two low water weirs intended for this bypass channel have the potential for collecting contaminated sediment over time. Measures should be taken to protect the bank and streambed from erosion or head cutting above the bypass channel in order to prevent contaminated sediment from moving downstream. Currently the ADH is considering extending the current fish consumption advisory beyond the Highway 13 Bridge. Any repositioning of dioxin-contaminated sediment could have a long-term effect on the distribution of dioxin in the aquatic system.

III-13-d. Construction of Low Water Weirs. The immediate, short-term impacts from weir construction would be similar to those from channel excavation such as increased turbidities and species reduction. Long term, the construction of weirs will allow for a permanent pool of water during low flow conditions and could provide some improvement of habitat for freshwater mussels, other freshwater invertebrates and fish. The potential exists, however, for basic water quality parameters such as DO and temperature to become impaired in the summer. Also, since weirs have the potential to trap sediments moving through the system and the main contaminants of concern in the project area are associated with sediments, provisions should be made to monitor the depth of sediments trapped by the weirs and their anthropogenic chemical composition to ensure there are no long term impacts to biota within the immediate project area.

III-13-e. Construction of Pumping Plants. The construction of pumping plants will likely have no direct impacts to the streams. Indirect impacts will be localized

resulting from removal of vegetation and from construction practices. Erosion effects can be minimized through the development and proper implementation of the State required storm water plan. These impacts are anticipated to be short term and will decrease once vegetation has been reestablished along the effected area.

III-13-f. Operation of Pumping Plants. In operation, the pumping plants may become point sources that introduce turbidity into the receiving waters. In Regulation 2, the State of Arkansas says that 'there shall be no distinctly visible increase in turbidity of receiving waters attributable to municipal, industrial, agricultural, other waste discharges or instream activities'. No discharge or instream activity should cause turbidity values to exceed 45 NTU for least-altered Delta Ecoregion streams or 75 NTU for channel-altered Delta Ecoregion streams. Suspended sediment that would normally settle during flood events would be pumped out of the basin, resulting in a pulse of high turbidity in the receiving water. The effects would be those of increased turbidities discussed above.

III-14. REFERENCES.


1. Arkansas Department of Environmental Quality, (2002) 'Water Quality Inventory Report'.

2. Long, E.R., MacDonald, D.D., Smith, S.L., and Calder, F.D., (1995). 'Incidence of adverse biological effects within ranges of chemical concentrations in marine and estuarine sediments'. Envir. Management. 19: 81-97.

3. Arkansas Pollution Control and Ecology Commission, (2001). 'Regulation 2; Regulation Establishing Water Quality Standards for Surface Waters of the State of Arkansas'. http://www.adeq.state.ar.us/regs/default.htm

4. US EPA Region 6, (2002). 'National Priorities List Sites in Arkansas: Vertac Inc.'. http://www.epa.gov/superfund/sites/npl/ar.htm

5. University of Arkansas - Arkansas Cooperative Fish and Wildlife Research Unit, (1992). 'Annual report to the U.S. Fish and Wildlife Service on the continuing project: ecological affects of dioxins

contamination on the aquatic community of Bayou Meto, Arkansas.' Fayetteville, Arkansas.

6. Shacklette, H.T. and Goerngen, J.G., (1984). 'Element concentrations in soils and other surficial materials of the conterminous United States'. US Geological Survey Professional Paper 1270.

7. Arkansas Multi-Agency Wetland Planning Team. 'Bayou Meto Wetland Planning Area Report'. http://www.mawpt.org/pdfs/bayo meto.pdf

8. CH2M Hill, (2001). 'First Five-Year Review Report for the Vertac Incorporated Superfund Site - Jacksonville, Pulaski County, Arkansas.' http://www.epa.gov/earth1r6/6sf/vertac/vi 5yr 0107 without photographs.pdf

9. Arkansas Department of Health (2002). Personal communication between Karen Myers (MVK) and Shirley Louie (ADH).

10. Kleiss, B.A., Coupe, R.A., Gonthier, G.J., and Justus, B.G., (2000). ' Water quality in the Mississippi Embayment, Mississippi, Louisiana, Arkansas, Missouri, Tennessee, and Kentucky, 1995-98'. USGS Circular 1208.

11. Coupe, R.H., (2000). 'Occurrence of pesticides in five rivers of the Mississippi Embayment study unit, 1996-98'. USGS Water-Resources Investigations Report 99-4159.

12. USGS NWIS Web Data for the Nation. http://waterdata.usgs.gov/nwis

13. ADEQ Surface Water Quality Monitoring Database. http://www.adeq.state.ar.us/techsvs/water quality/monitors.asp

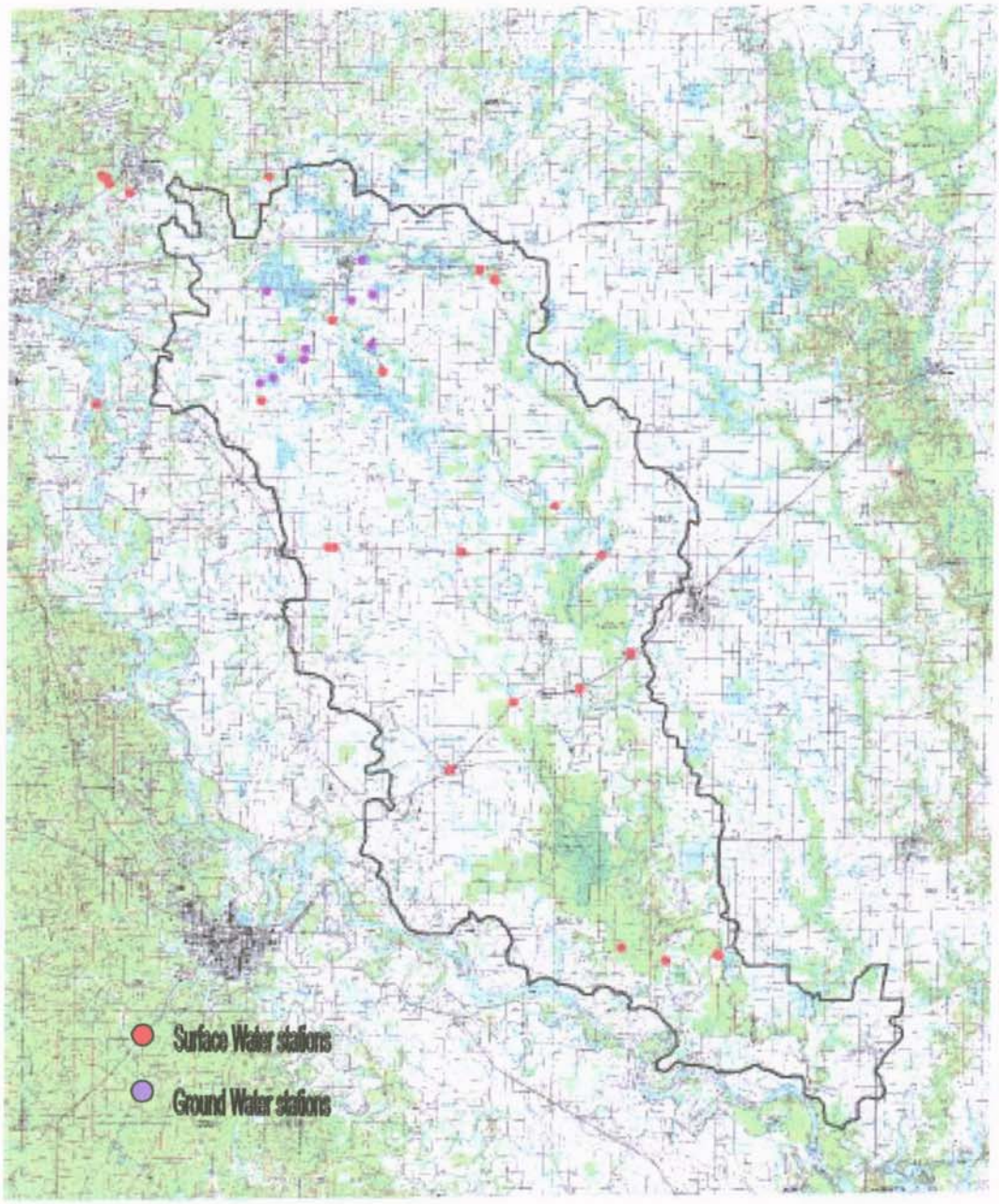


Figure 1. Sampling stations evaluated within the Bayou Meto Project Area.

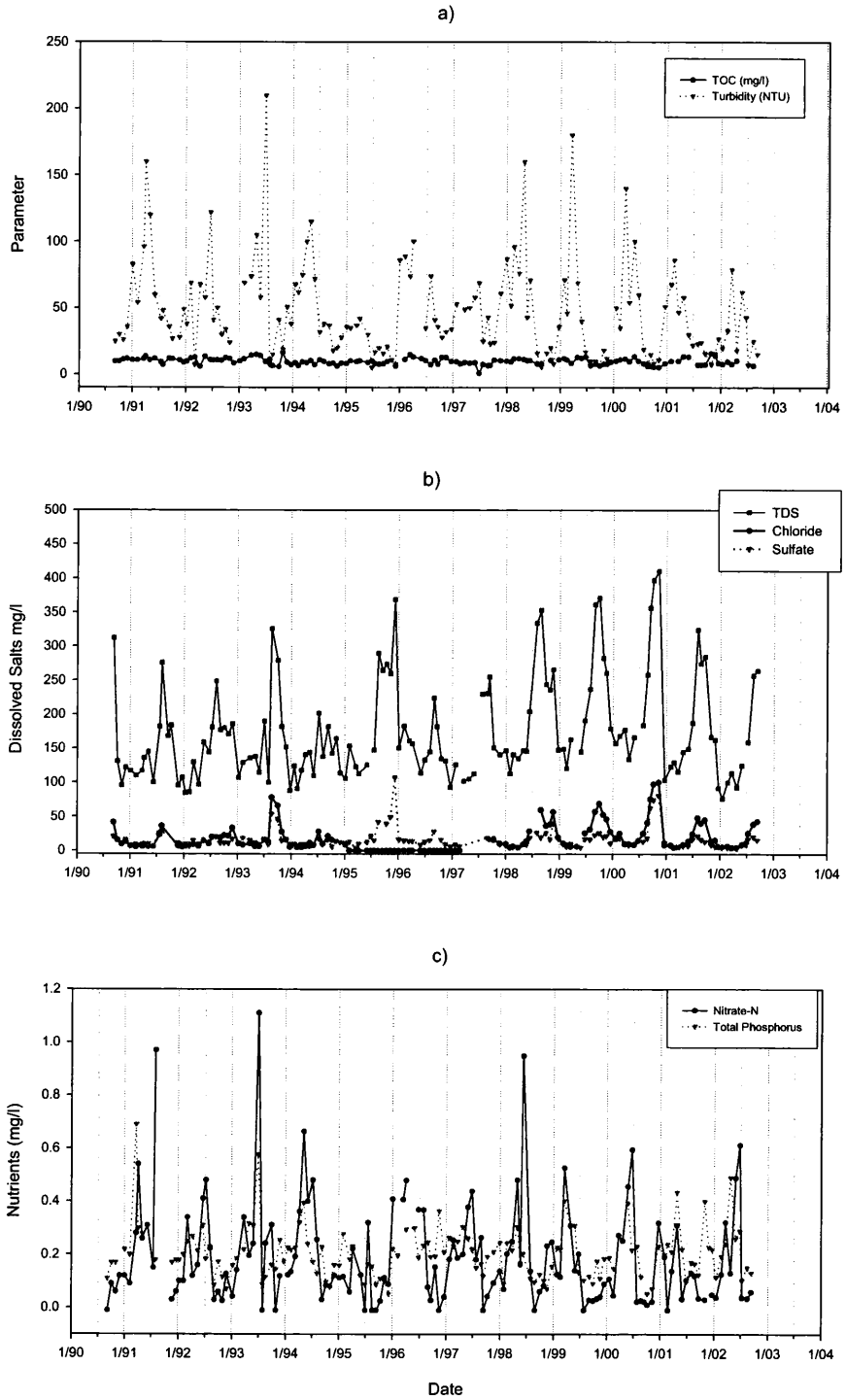


Figure 2. Example of water quality data periodicity in the project area (ARK023: Bayou Meto at Bayou Meto, Arkansas).

| Table 1. Sampling stations for USGS and ADEQ data used in this water quality evaluation. | | |
|---|---|---|
| STATION | LOCATION | PERIOD OF RECORD |
| Surface Water<br>Bayou Meto HUC 08020402 | | |
| USGS 7263920 (BMU) | Bayou Meto nr N. Little Rock, AR<br>-0920913: 345158 NAD27 | 11/01/83 – 9/06/94 |
| USGS 7263935 (BMU) | Bayou Meto nr Jacksonville, AR<br>-0920720: 345039 NAD 27 | 11/01/83 – 9/06/94 |
| USGS 7264000 (BM) | Bayou Meto nr Lonoke, AR<br>-0915458: 344413 NAD 27 | 2/21/55 – 10/04/83 |
| USGS 7264050 (TPB) | Two Prairie Bayou nr Furlow, AR<br>-0915848: 345132 NAD 27 | 4/03/74 – 7/12/83 |
| USGS 7264200 (TPB) | Two Prairie Bayou @ Carlisle, AR<br>-0914558: 344644 NAD 27 | 7/11/61 – 10/20/87 |
| USGS 7264203 (TPB) | Two Prairie Bayou on HW 13 Br. S of Carlisle, AR<br>-0914505: 344610 NAD 27 | 10/05/93 – 9/06/94 |
| USGS 7264500 (BM) | Bayou Meto nr Stuttgart, AR<br>-0913658: 342715 | 11/10/49 – 12/11/74 |
| USGS 7265000 (CC) | Crooked Creek nr Humphrey, AR<br>-0914004: 342535 NAD 27 | 11/14/45 – 2/22/55 |
| USGS 7265099 (BM) | Bayou Meto nr Bayou Meto, AR<br>-0913145: 341205 NAD 27 | 4/17/74 – 5/23/96 |
| ADEQ ARK0023 (USGS 7265099) (BM) | Bayou Meto nr Bayou Meto, AR<br>-91.5306: 34.2019 | 9/04/90 – 9/10/02 |
| ADEQ ARK0050 (BMU) | Bayou Meto @ HW 161 nr Jacksonville, AR<br>-92.1221: 34.8442 | 10/01/83 – 9/10/02 |
| ADEQ ARK0060 (BMU) | Bayou Meto @ W Main St Br in Jacksonville, AR<br>-92.1538: 34.8661 | 10/01/83 – 9/10/02 |
| ADEQ ARK0097 (TPB) | Two Prairie Bayou @ HW 13 S of Carlisle, AR<br>-91.7514: 34.7694 | 5/14/93 – 9/10/02 |
| ADEQ UWBM001 (BM) | Bayou Meto @ county rd SE of Seaton Dump<br>-91.6911: 34.5769 | 6/01/94 – 9/11/01 |
| ADEQ UWBM002 (BM) | Bayou Meto @ HW 79, 2 mi SW of Stuttgart, AR<br>-91.6164: 34.4536 | 6/01/94 – 9/11/01 |
| Surface Water<br>Lower Arkansas River HUC 08020401 | | |
| ADEQ UWWSB01 (USGS 07262528) (WAB) | Wabbaseka Bayou @ HW 79 @ Wabbaseka, AR<br>-91.3164: 33.9717 | 6/01/94 – 9/10/01 |
| Surface Water<br>Lower Arkansas - Maumelle HUC 11110207 | | |
| USGS 07263620 (AR) | Arkansas River @ David D. Terry Lock & Dam<br>920918: 344007 NAD 27 | 7/24/69 – 9/13/01 |
| ADEQ ARK0046 (USGS 07263620) (AR) | Arkansas River @ David D. Terry Lock & Dam<br>-92.155: 34.6686 | 10/01/86 – 9/10/02 |
| Ground Water<br>Lonoke Monitoring Area - Mississippi River Valley Alluvial Aquifer<br>(Bayou Meto HUC 08020402) | | |
| ADEQ LON014 | -91 53 29.7; 34 47 10.1 | 6/12/01 |
| ADEQ LON016 | -91 59 09.7; 34 45 49.1 | 6/19/01 |
| ADEQ LON017 | -91 52 43.5; 34 45 32.5 | 6/12/01 |
| ADEQ LON017R | -91 53 46.4; 34 45 18.2 | 6/12/01 |
| ADEQ LON020 | -91 56 01.7; 34 42 40.2 | 6/12/01 |
| ADEQ LON021 | -91 59 21.2; 34 42 19.2 | 6/19/01 |
| ADEQ LON024 | -91 52 32.4; 34 42 56.4 | 6/12/01 |
| ADEQ LON040 | -91 58 37.0; 34 41 13.5 | 6/19/01 |
| ADEQ LON041 | -91 58 58.1; 34 41 14.8 | 6/19/01 |
| ADEQ LON042 | -91 58 02.1; 34 42 19.7 | 6/19/01 |

Table 2. Sampling stations for MVK water and sediment samples.

| Station | Location | Sample Date |
|---|---|---|
| LBM-01 | Little Bayou Meto | August 2000 |
| TPB-01 | Two Prairie Bayou | August 2000 |
| Bayou Meto-1 | Bayou Meto | August 2000 |
| BM HW 11 | Bayou Meto | August 2000 |
| WB-01 | Wabbaseka Bayou | August 2000 |
| WB-02 | Wabbaseka Bayou | August 2000 |
| Indian Bayou-01 | Indian Bayou | August 2000 |
| Indian Bayou Ditch | | August 2000 |
| Crooked Creek | Crooked Creek | August 2000 |
| BM-10 | Little Bayou Meto<br>0630601: 3784809 | January 2001 |
| BM-11 | Little Bayou Meto<br>0626444: 3786017 | January 2001 |
| BM-12 | Salt Bayou Ditch<br>0616261: 3808691 | January 2001 |
| BM-13 | Two Prairie Bayou<br>0614279: 3847993 | January 2001 |
| BM-14 | Indian Bayou<br>0592729: 3836600 | January 2001 |

Table 3. Water quality and nutrient data from streams in the project area (sources: USGS and ADEQ).

| Parameter | #/Group | Statistic | Bayou Meto Urban | Bayou Meto | Two Prairie Bayou | Crooked Creek | Wabbaseka Bayou | Arkansas River Terry L&D | Criteria |
|---|---|---|---|---|---|---|---|---|---|
| Water Temperature (C) | 495/570 /220/0 /13/518 | Min Mean Max | 1.0 17.6 32.0 | 0.0 18.2 35.0 | 0.5 17.0 32.0 | - | 4.0 19.3 30.0 | 0.0 18.7 33.0 | 30 [a] 32 [b] |
| pH (SU) | 499/689 /222/11 /13/567 | Min Mean Max | 5.9 6.9 7.3 | 4.4 7.3 8.8 | 5.3 6.9 8.0 | 6.3 7.1 8.4 | 6.0 7.3 8.2 | 5.9 7.7 9.0 | 6.0 – 9.0 |
| Dissolved Oxygen (mg/l) | 542/778 /237/19 /23/592 | Min Mean Max | ND 5.34 9.66 | ND 4.39 16.3 | ND 5.3 12.0 | ND | ND 3.2 12.8 | ND 7.8 16.4 | 5 [c] 2 [d] |
| Turbidity (NTU) | 466/404 /176/0 /16/441 | Min Mean Max | 4.20 21.3 192 | 3.00 56.8 2000 | 4.00 37.3 290 | - | 4.1 66.5 240 | 0.60 22.0 660 | 45 [a] 75 [b] 100 [j] |
| Conductivity (µhos/cm) | 0/374 /65/19 /0/417 | Min Mean Max | - | 38.0 198 1530 | 43.0 139 849 | 43.0 118 300 | - | 135 533 1110 | |
| Chloride (mg/l) | 477/640 /202/19 /15/526 | Min Mean Max | 0.035 18.9 1200 | 0.035 22.2 550 | 0.035 16.5 85.7 | 2.20 8.10 32.0 | 0.035 16.4 49.7 | 0.035 72.9 230 | 36[e] |
| Sulfate (mg/l) | 480/630 /207/19 /15/529 | Min Mean Max | 1.17 8.95 35.1 | 0.500 12.3 130 | 0.500 10.9 52.6 | 1.00 7.98 22.0 | 3.63 20.4 66.4 | 13.0 45.2 257 | 28 |
| Ammonia (mg/l) | 494/412 /190/0 /15/260 | Min Mean Max | 0.002 0.266 5.60 | 0.002 0.100 0.911 | 0.002 0.514 9.50 | - | 0.002 0.081 0.180 | 0.002 0.071 0.460 | 19.9 [g] 1.6 [h] |
| Nitrate/Nitrite (mg/l) | 469/472 /215/0 /15/267 | Min Mean Max | 0.005 0.583 12.0 | 0.005 0.282 1.41 | 0.005 .333 4.94 | - | 0.005 0.415 1.12 | ND 0.327 0.855 | |
| Ortho-Phosphate (mg/l) | 498/356 /149/0 /15/192 | Min Mean Max | 0.002 0.441 6.10 | 0.002 0.127 0.880 | 0.018 0.476 7.33 | - | 0.106 0.220 0.592 | 0.002 0.063 0.370 | |
| Total Phosphorus (mg/l) | 482/501 /217/0 /15/544 | Min Mean Max | 0.010 0.576 7.50 | 0.030 0.238 0.390 | 0.010 0.655 7.90 | - | 0.166 0.358 0.838 | ND 0.109 0.933 | 0.1 |
| TKN (mg/l) | 413/132 /56/0 /6/476 | Min Mean Max | 0.050 0.988 5.50 | 0.050 1.13 3.30 | 0.692 1.44 2.68 | - | 0.620 1.26 2.24 | 0.080 0.713 4.60 | |
| TOC (mg/l) | 393/222 /110/0 /12/188 | Min Mean Max | 2.10 7.24 20.0 | 0.700 9.76 16.4 | 4.85 10.4 17.5 | - | 6.4 8.69 10.4 | 0.60 5.71 11.0 | |
| TSS (mg/l) | 499/466 /216/0 /13/162 | Min Mean Max | 0.50 18.0 267 | 0.50 39.0 375 | 2.00 28.4 287 | - | 6.00 22.4 61.5 | 0.50 19.6 121 | |
| TDS (mg/l) | 488/612 /206/2 /15/513 | Min Mean Max | 6.00 102 2510 | 20.0 159 1120 | 45.0 143 376 | 77.0 87.0 97.0 | 123 230 391 | 5.00 290 1480 | 390[e] |
| Fecal Coliform (# / 100 mls) | 259/610 /131/19 /8/450 | Min Mean Max | ND 131 4500 | ND 159 7400 | ND 288 4400 | ND ND ND | 88 323 820 | ND 766 51000 | 1000 [f] 200 [i] |

[a] Delta Ecoregion, Least-Altered Streams
[b] Delta Ecoregion, Channel-Altered Streams
[c] Delta Ecoregion, Primary Season Value
[d] Delta Ecoregion, Lowest Critical Season Value
[e] Delta Ecoregion
[f] Secondary Contact Waters
[g] acute aquatic life (CMC)
[h] chronic aquatic life (CCC)
[i] Primary contact waters
[j] Storm runoff

Table 4. Metals data from streams in the project area (sources: USGS and ADEQ).

| Parameter µg/l | #/Group | Statistic | Bayou Meto Urban | Bayou Meto | Two Prairie Bayou | Crooked Creek | Wabbaseka Bayou | Arkansas River Terry L&D | Criteria (Reg 2, July 2001) |
|---|---|---|---|---|---|---|---|---|---|
| Aluminum | 98/65 | Min | 21.8 | 28.1 | 23.1 | | 18.9 | 16.9 | |
| | /48/0 | Mean | 128 | 269 | 252 | - | 146 | 134 | |
| | /11/48 | Max | 701 | 1806 | 1619 | | 485 | 587 | |
| Arsenic | 52/143 | Min | 0.500 | 0.500 | 0.500 | | 1.43 | ND | |
| | /73/0 | Mean | 0.965 | 3.98 | 3.66 | - | 6.65 | 1.43 | |
| | /5/149 | Max | 2.78 | 24.0 | 30.0 | | 17.9 | 4.14 | |
| Cadmium | 234/272 | Min | ND | ND | 0.070 | | 7.10 | 0.02 | 1.7 [a,c] |
| | /108/0 | Mean | 0.331 | 3.00 | 3.54 | - | 30.2 | 1.22 | 3.7 [a,d] |
| | /12/132 | Max | 1.30 | 10.0 | 10.0 | | 62.7 | 78.0 | 0.6 [b,c] |
| | | | | | | | | | 1.0 [b,d] |
| Chromium | 227/217 | Min | 0.200 | ND | 0.200 | | 0.200 | ND | 326 [a,c] |
| | /78/0 | Mean | 0.860 | 3.15 | 2.53 | - | 0.276 | 1.65 | 564 [a,d] |
| | /5/126 | Max | 11.0 | 50.0 | 16.0 | | 0.580 | 20.0 | 111 [b,c] |
| | | | | | | | | | 188 [b,d] |
| Copper | 280/347 | Min | 0.250 | ND | 0.250 | | 0.25 | ND | 9 [a,c] |
| | /149/0 | Mean | 7.23 | 13.1 | 13.6 | - | 1.43 | 4.12 | 17 [a,d] |
| | /12/163 | Max | 32.0 | 176 | 127 | | 3.80 | 24.4 | 7 [b,c] |
| | | | | | | | | | 12 [b,d] |
| Iron | 98/229 | Min | 42.1 | ND | 19.0 | | 9.00 | 1.5 | |
| | /110/1 | Mean | 479 | 1579 | 1373 | 1300 | 133 | 44.7 | |
| | /11/170 | Max | 2270 | 14100 | 4410 | | 675 | 298 | |
| Lead | 231/214 | Min | 0.200 | ND | 0.20 | | | ND | 30 [a,c] |
| | /75/0 | Mean | 3.57 | 8.13 | 7.01 | - | ND | 1.19 | 65 [a,d] |
| | /5/130 | Max | 100 | 70.0 | 52.0 | | | 27.0 | 1.2 [b,c] |
| | | | | | | | | | 2.5 [b,d] |
| Manganese | 98/223 | Min | 23.3 | ND | 13.0 | | 4.90 | 0.25 | |
| | /112/0 | Mean | 480 | 225 | 757 | - | 262 | 7.24 | |
| | /12/169 | Max | 2799 | 1500 | 13000 | | 1400 | 80 | |
| Mercury | 6/17 | Min | ND | ND | ND | | | ND | 2.0 [a] |
| | /3/0 | Mean | 0.196 | 0.449 | 0.42 | - | - | 0.127 | 0.012 [b] |
| | /0/75 | Max | 0.250 | 1.60 | 0.50 | | | 0.700 | |
| Nickel | 98/78 | Min | ND | ND | | | 1.00 | ND | 780 [a,c] |
| | /48/0 | Mean | 1.51 | 2.81 | ND | - | 2.94 | 1.74 | 1400 [a,d] |
| | /11/148 | Max | 24.3 | 37.0 | | | 22.4 | 9.00 | 88 [b,c] |
| | | | | | | | | | 157 [b,d] |
| Selenium | 52/76 | Min | | ND | ND | | | ND | 20 [a] |
| | /47/0 | Mean | ND | 2.31 | 2.30 | - | ND | 1.02 | |
| | /5/59 | Max | | 5.00 | 10.0 | | | 4.15 | 5 [b] |
| Silver | 0/5 | Min | | ND | | | | ND | 1.0 [a,c] |
| | /0/0 | Mean | - | 0.200 | - | - | - | 0.48 | 3.4 [a,d] |
| | /0/100 | Max | | 1.00 | | | | 1.0 | |
| Zinc | 232/330 | Min | ND | ND | ND | | ND | ND | 64 [a,c] |
| | /144/0 | Mean | 23.4 | 24.4 | 28.7 | - | 3.44 | 8.7 | 115 [a,d] |
| | /12/156 | Max | 500 | 320 | 390 | | 9.40 | 110 | 58 [b,c] |
| | | | | | | | | | 105 [b,d] |
| Hardness | 322/661 | Min | ND | ND | ND | 14.0 | 28.0 | 45.0 | |
| | /171/19 | Mean | 22.6 | 38.4 | 32.5 | 38.7 | 123 | 116 | |
| | 12/195 | Max | 260 | 250 | 168 | 120 | 260 | 208 | |

[a] acute aquatic life criteria (CMC)
[b] chronic aquatic life criteria (CCC)
[c] hardness dependent (50 mg/l)
[d] hardness dependent (100 mg/l)

Table 5. Combined pesticides and PCB data from project area streams (sources: USGS and ADEQ).

| Parameter (µg/l) | # Detected /Group | Statistic | Bayou Meto Urban | Bayou Meto | Two Prairie Bayou | Crooked Creek | Wabbaseka Bayou | Arkansas River Terry L & D | Criteria CMC [a] CCC [b] |
|---|---|---|---|---|---|---|---|---|---|
| Aldrin | 6/0/3 | Min<br>Max | ND<br>0.001 | ND | ND<br>0.001 | - | - | - | 3.0<br>- |
| A-BHC | 0/0/0 | Min<br>Max | ND | ND | ND | - | - | - | |
| B-BHC | | Min<br>Max | ND | ND | ND | - | - | - | |
| G-BHC | | Min<br>Max | ND | ND | ND | - | - | - | |
| D-BHC | | Min<br>Max | ND | ND | ND | - | - | - | |
| pp-DDD | 1/0/0 | Min<br>Max | 0.005 | ND | ND | - | - | - | 1.1<br>0.0010 |
| pp-DDE | 10/0/3 | Min<br>Max | 0.001<br>0.001 | ND | 0.001<br>0.001 | - | - | - | 1.1<br>0.0010 |
| pp-DDT | 6/0/1 | Min<br>Max | 0.001<br>0.001 | ND | 0.001 | - | - | - | 1.1<br>0.0010 |
| Heptachlor | | Min<br>Max | ND | ND | ND | - | - | - | 0.52<br>0.0038 |
| Dieldrin | 18/0/2 | Min<br>Max | 0.001<br>0.010 | ND | 0.001<br>0.001 | - | - | - | 2.5<br>0.0019 |
| A-Endosulfan | | Min<br>Max | ND | ND | ND | - | - | - | |
| B-Endosulfan | | Min<br>Max | ND | ND | ND | - | - | - | Sum =<br>0.22 |
| Endosulfan Sulfate | | Min<br>Max | ND | ND | ND | - | - | - | 0.056 |
| Endrin | 19/0/2 | Min<br>Max | 0.001<br>0.068 | ND | 0.001<br>0.001 | - | - | - | 0.18<br>0.0023 |
| Endrin Aldehyde | | Min<br>Max | ND | ND | ND | - | - | - | |
| Heptachlor Epoxide | | Min<br>Max | ND | ND | ND | - | - | - | |
| Methoxychlor | | Min<br>Max | ND | ND | ND | - | - | - | |
| Chlordane | | Min<br>Max | ND | ND | ND | - | - | - | 2.4<br>0.0043 |
| Toxaphene | 2/0/1 | Min<br>Max | 1<br>5 | ND | 5 | - | - | - | 0.73<br>0.0002 |
| PCB | | Min<br>Max | ND | ND | ND | - | - | - | -<br>0.0140 |

[a] (CMC) - acute aquatic life criteria
[b] (CCC) - chronic aquatic life criteria

Table 6. Herbicide data from ADEQ for project area streams.

| Parameter (µg/l) | # Detected /Group | Statistic | Bayou Meto Urban | Bayou Meto | Two Prairie Bayou | Crooked Creek | Wabbaseka Bayou | Arkansas River Terry L & D | Criteria |
|---|---|---|---|---|---|---|---|---|---|
| Molinate | 2/8/1<br>0/4/0 | Min<br>Max | 0.016<br>3.38 | 0.62<br>11.5 | 0.088 | - | 0.025<br>12.3 | ND | |
| Trifluralin | 1/0/0<br>0/0/0 | Min<br>Max | 0.007 | ND | ND | - | ND | ND | |
| Prometon | 2/1/0<br>0/2/0 | Min<br>Max | 0.023<br>0.035 | 0.011 | ND | - | 0.088<br>0.568 | ND | |
| Simazine | 1/2/1<br>0/0/0 | Min<br>Max | 0.047 | 0.011 | 0.118 | - | ND | ND | |
| Atrazine | 4/6/1<br>0/3/1 | Min<br>Max | 0.008<br>0.293 | 0.031<br>0.202 | 0.472 | - | 0.034<br>0.085 | 0.368 | |
| Diazinon | 2/0/0<br>0/0/0 | Min<br>Max | 0.038<br>0.044 | ND | ND | - | ND | ND | |
| Metribuzin | 1/4/1<br>0/1/1 | Min<br>Max | 0.082 | 0.016<br>0.066 | 0.012 | - | 0.074 | 0.010 | |
| Alachlor | 1/2/0<br>0/0/1 | Min<br>Max | 0.056 | 0.045<br>0.056 | ND | - | ND | 0.024 | |
| Ametryn | 0/1/0<br>0/0/0 | Min<br>Max | ND | 0.006 | ND | - | ND | ND | |
| Prometryn | 0/2/0<br>0/3/0 | Min<br>Max | ND | 0.004<br>0.050 | ND | - | 0.017<br>0.213 | ND | |
| Terbutryn | 0/1/1<br>0/3/1 | Min<br>Max | 0.060 | ND | 0.018 | - | 0.041<br>1.60 | ND | |
| Metolachlor | 3/9/1<br>0/4/0 | Min<br>Max | 0.008<br>1.78 | 0.013<br>1.53 | 0.594 | - | 0.029<br>1.81 | 0.159 | |
| Cyanazine | 0/2/0<br>0/1/0 | Min<br>Max | 0.083<br>0.717 | ND | ND | - | 0.860 | ND | |
| Pendimethalin | 1/1/0<br>0/0/0 | Min<br>Max | 0.010 | 0.064 | ND | - | ND | ND | |

Table 7. Water quality samples collected by MVK for nutrients in water.

| Parameter (mg/l) | LBM - 01 | TPB-01 | Bayou Meto -1 | BM HW 11 | WB-01 | WB-02 | Indian Bayou-01 | Indian Bayou Ditch | Crooked Creek | BM-10 Little Bayou Meto | BM-11 Bayou Meto | BM-12 Five Fork | BM-13 Two Prairie Bayou | BM-14 Indian Bayou | Criteria |
|---|---|---|---|---|---|---|---|---|---|---|---|---|---|---|---|
| | August 2000 | | | | | | | | | January 2001 | | | | | |
| TKN | 0.38 | 0.57 | 0.70 | 0.37 | 0.21 | 0.35 | 0.34 | 0.30 | 0.86 | 1.3 | 0.81 | 0.78 | 0.90 | 0.92 | |
| TP | 0.30 | 0.11 | 0.12 | 0.084 | 0.12 | 0.12 | 0.17 | 0.076 | 0.14 | 0.32 | 0.22 | 0.18 | 0.25 | 0.29 | 0.1 |
| Sulfate | 9.5 J | 21 | 20 J | 19 J | 21 | 41 | 60 | 82 | ND | 19 J | 15 J | 22 | 14 J | 16 J | 28 |
| Chloride | 28 | 27 | 49 | 43 | 55 | 77 | 64 | 81 | 34 | 16 | 8.5 | 20 | 17 | 11 | 36 |
| TSS | 20.7 | 38 | 56 | 18 | 26 | 28 | 36 | 22 | 40 | 36.8 | 6.9 | 19.0 | 30.2 | 52.7 | |
| Total Solids | 390 | 290 | 376 | 298 | 460 | 528 | 540 | 658 | 273 | 234 | 118 | 220 | 147 | 191 | |
| TOC | 82 | 48 | 52 | 45 | 73 | 66 | 76 | 79 | 47 | - | - | - | - | - | |
| Ammonia | 0.094J | ND | ND | ND | ND | 0.037J | ND | 0.13 | ND | - | - | - | - | - | 19.9 [a] 1.6 [b] |
| NO2/NO3 | 0.10 | 0.035 J | 0.065 J | 0.027 J | 0.053 J | 0.24 | 0.088J | 0.16 | 0.041J | - | - | - | - | - | |

a acute aquatic life criteria (CMC)

b chronic aquatic life criteria (CCC)

Table 8. Water quality samples collected by MVK for trace metals in water.

| Parameter (µg/l) | LBM - 01 | TPB-01 | Bayou Meto -1 | BM HW 11 | WB-01 | WB-02 | Indian Bayou-01 | Indian Bayou Ditch | Crooked Creek | BM-10 Little Bayou Meto | BM-11 Bayou Meto | BM-12 Five Fork | BM-13 Two Prairie Bayou | BM-14 Indian Bayou | Criteria (Reg 2, July 2001) |
|---|---|---|---|---|---|---|---|---|---|---|---|---|---|---|---|
| | **August 2000** | | | | | | | | | **January 2001** | | | | | |
| Antimony | <20 | <20 | <20 | <20 | <20 | <20 | <20 | <20 | <20 | < 3 | < 3 | < 3 | < 3 | < 3 | |
| Arsenic | 4.95 | <15 | 3.5 J | <15 | 6.8 J | 3.6 J | 5.6 J | <15 | <15 | 2 | 2 | 2 | < 2 | 2 | |
| Beryllium | <2.0 | <2.0 | <2.0 | <2.0 | <2.0 | <2.0 | <2.0 | <2.0 | <2.0 | < 1 | < 1 | < 1 | < 1 | < 1 | |
| Cadmium | <2.5 | <2.5 | <2.5 | <2.5 | <2.5 | <2.5 | <2.5 | <2.5 | <2.5 | < 0.2 | < 0.2 | < 0.2 | < 0.2 | < 0.2 | 1.7 [a]<br>0.6 [b] |
| Chromium | <10 | 2.1 J | <10 | 8.1 J | <10 | <10 | 2.1 J | <10 | <10 | 3 | 3 | 3 | 2 | 5 | 326 [a]<br>111 [b] |
| Copper | <10 | <10 | <10 | <10 | <10 | <10 | <10 | <10 | <10 | 3 | 3 | 2 | 2 | 4 | 9 [a]<br>7 [b] |
| Lead | <10 | <10 | <10 | <10 | <10 | <10 | <10 | <10 | <10 | 1 | 1 | 1 | 1 | 2 | 30 [a]<br>1.2 [b] |
| Mercury | .000007 | .000003 | .000006 | .000003 | .000002 | .000004 | .000003 | .000002 | .000004 | 0.008 | 0.010 | 0.005 | 0.008 | 0.010 | 2.0 [a]<br>0.012 [b] |
| Nickel | <10 | <10 | <10 | 5.9 J | <10 | <10 | <10 | <10 | <10 | 3 | 3 | 3 | 2 | 4 | 780 [a]<br>88 [b] |
| Selenium | <20 | <20 | <20 | <20 | <20 | <20 | <20 | <20 | <20 | < 2 | < 2 | < 2 | < 1 | < 2 | 20 [a]<br>5 [b] |
| Silver | <5.0 | <5.0 | <5.0 | <5.0 | <5.0 | <5.0 | <5.0 | <5.0 | <5.0 | < 1 | < 1 | < 1 | < 1 | < 1 | 1.0 [a] |
| Thallium | <30 | <30 | <30 | <30 | <30 | <30 | <30 | <30 | <30 | < 2 | < 2 | < 2 | < 2 | < 2 | |
| Zinc | <10 | 3.0 J | 7.2 J | 3.1 J | 4.4 J | 4.7 J | 6.2 J | <10 | 5.2 J | < 10 | 12 | 11 | 10 | 411 | 64 [a]<br>58 [b] |

[a] acute aquatic life criteria (CMC)
[b] chronic aquatic life criteria (CCC)

Table 9. Water quality samples collected by MVK for pesticides and PCBs in water.

| Parameter (µg/l) | LBM - 01 | TPB-01 | Bayou Meto -1 | BM HW 11 | WB-01 | WB-02 | Indian Bayou-01 | Indian Bayou Ditch | Crooked Creek | Criteria CMC [a] CCC [b] |
|---|---|---|---|---|---|---|---|---|---|---|
| | August 2000 | | | | | | | | | |
| Aldrin | <0.025 | <0.025 | 0.032 | <0.025 | <0.025 | 0.029 | 0.031 | <0.025 | 0.034 | 3.0<br>- |
| A-BHC | <0.025 | 0.015J | 0.019J | <0.025 | 0.012J | <0.025 | 0.011J | <0.025 | 0.022J | |
| B-BHC | <0.025 | <0.025 | <0.025 | 0.030 | 0.024J | 0.012J | 0.028 | <0.025 | <0.025 | |
| G-BHC | <0.025 | <0.025 | <0.025 | <0.025 | 0.023J | <0.025 | <0.025 | <0.025 | <0.025 | |
| D-BHC | <0.025 | <0.025 | <0.025 | 0.034 | <0.025 | <0.025 | <0.025 | <0.025 | <0.025 | |
| pp-DDD | <0.050 | <0.050 | <0.050 | <0.050 | <0.050 | <0.050 | <0.050 | <0.050 | <0.050 | 1.1<br>0.0010 |
| pp-DDE | <0.050 | <0.050 | <0.050 | <0.050 | <0.050 | <0.050 | <0.050 | <0.050 | <0.050 | 1.1<br>0.0010 |
| pp-DDT | <0.050 | <0.050 | <0.050 | <0.050 | <0.050 | <0.050 | <0.050 | <0.050 | <0.050 | 1.1<br>0.0010 |
| Heptachlor | <0.025 | <0.025 | <0.025 | <0.025 | <0.025 | <0.025 | <0.025 | <0.025 | <0.025 | 0.52<br>0.0038 |
| Dieldrin | <0.050 | <0.050 | <0.050 | <0.050 | <0.050 | <0.050 | <0.050 | <0.050 | <0.050 | 2.5<br>0.0019 |
| A-Endosulfan | <0.025 | <0.025 | <0.025 | <0.025 | <0.025 | <0.025 | <0.025 | <0.025 | <0.025 | Sum = |
| B-Endosulfan | <0.050 | <0.050 | <0.050 | <0.050 | <0.050 | <0.050 | <0.050 | <0.050 | <0.050 | 0.22 |
| Endosulfan Sulfate | <0.050 | 0.098 | 0.038J | <0.050 | <0.050 | <0.050 | <0.050 | <0.050 | <0.050 | 0.056 |
| Endrin | <0.050 | <0.050 | 0.016J | <0.050 | <0.050 | <0.050 | <0.050 | <0.050 | <0.050 | 0.18<br>0.0023 |
| Endrin Aldehyde | <0.050 | 0.17 | <0.050 | 0.17 | <0.050 | <0.050 | <0.050 | <0.050 | <0.050 | |
| Heptachlor Epoxide | <0.025 | <0.025 | <0.025 | <0.025 | <0.025 | <0.025 | <0.025 | <0.025 | <0.025 | |
| Methoxychlor | <0.25 | <0.25 | <0.25 | <0.25 | <0.25 | <0.25 | <0.25 | <0.25 | <0.25 | |
| Chlordane | <0.25 | <0.25 | <0.25 | <0.25 | <0.25 | <0.25 | <0.25 | <0.25 | <0.25 | 2.4<br>0.0043 |
| Toxaphene | <0.25 | <0.25 | <0.25 | <0.25 | <0.25 | <0.25 | <0.25 | <0.25 | <0.25 | 0.73<br>0.0002 |
| PCBs | <0.25 | <0.25 | <0.25 | <0.25 | <0.25 | <0.25 | <0.25 | <0.25 | <0.25 | -<br>0.0140 |

[a] acute aquatic life criteria (CMC)
[b] chronic aquatic life criteria (CCC)

Table 10. Water quality samples collected by MVK for herbicides in water.

| Parameter (µg/l) | LBM - 01 | TPB-01 | Bayou Meto -1 | BM HW 11 | WB-01 | WB-02 | Indian Bayou-01 | Indian Bayou Ditch | Crooked Creek | BM-10 Little Bayou Meto | BM-11 Bayou Meto | BM-12 Five Fork | BM-13 Two Prairie Bayou | BM-14 Indian Bayou | Criteria |
|---|---|---|---|---|---|---|---|---|---|---|---|---|---|---|---|
| | August 2000 | | | | | | | | | January 2001 | | | | | |
| 2,4-D | <0.20 | <0.19 | 0.66 | 0.14 J | <0.19 | <0.19 | <0.19 | <0.19 | <0.19 | <0.20 | <0.20 | <0.20 | <0.20 | <0.20 | |
| 2,4-DP | <0.20 | <0.19 | <0.21 | <0.19 | <0.19 | <0.19 | <0.19 | <0.19 | <0.19 | <0.20 | <0.20 | <0.20 | <0.20 | <0.20 | |
| 2,4,5-T | <0.050 | <0.047 | <0.053 | <0.047 | <0.047 | <0.048 | <0.047 | 0.011 J | <0.048 | <0.05 | <0.05 | <0.05 | 0.038 J | <0.05 | |
| 2,4,5-TP | <0.050 | <0.047 | <0.053 | <0.047 | <0.047 | <0.048 | <0.047 | <0.048 | <0.048 | <0.05 | <0.05 | <0.05 | <0.05 | <0.05 | |
| 2,4-DB | <0.20 | <0.19 | <0.21 | <0.19 | <0.19 | 0.45 | <0.19 | <0.19 | <0.19 | <0.20 | <0.20 | <0.20 | <0.20 | 0.20 | |
| Dinoseb | <0.050 | 0.019 J | 0.35 | <0.047 | <0.047 | <0.048 | <0.047 | <0.048 | <0.048 | <0.05 | <0.05 | <0.05 | 0.120 | <0.05 | |
| MCPA | <20.0 | <18.9 | <21.3 | <18.9 | <18.9 | <19.2 | <18.9 | <19.2 | <19.2 | <20 | <20 | <20 | <20 | <20 | |
| MCPP | <20.0 | <18.9 | <21.3 | <18.9 | <18.9 | <19.2 | <18.9 | <19.2 | <19.2 | <20 | <20 | <20 | <20 | <20 | |
| Dalapon | <0.10 | <0.094 | <0.11 | <0.094 | <0.094 | <0.096 | <0.094 | <0.096 | <0.096 | ND | <0.10 | <0.10 | <0.10 | <0.10 | |
| Dicamba | <0.10 | <0.094 | <0.11 | <0.094 | <0.094 | <0.096 | <0.094 | <0.096 | <0.096 | ND | <0.10 | <0.10 | <0.10 | <0.10 | |
| DCAA % (surrogate) | 125 | 122 | 117 | 144 | 126 | 119 | 124 | 109 | 111 | 125 | 130 | 99 | 175 | 131 | |

Table 11. Water quality samples collected by MVK for PAHs in water.

| Parameter (µg/l) | LBM -01 | TPB-01 | Bayou Meto - 1 | BM HW 11 | WB-01 | WB-02 | Indian Bayou-01 | Indian Bayou Ditch | Crooked Creek | Criteria CMC[1] CCC[2] |
|---|---|---|---|---|---|---|---|---|---|---|
| | August 2000 | | | | | | | | | |
| Acenaphthene | <9.6 | <9.4 | <9.8 | <9.6 | <9.6 | <9.4 | <9.6 | <9.4 | <9.4 | 1700 520 |
| Acenaphthylene | <9.6 | <9.4 | <9.8 | <9.6 | <9.6 | <9.4 | <9.6 | <9.4 | <9.4 | |
| Anthracene | <9.6 | <9.4 | <9.8 | <9.6 | <9.6 | <9.4 | <9.6 | <9.4 | <9.4 | |
| Benzo[k]fluoranthene | <9.6 | <9.4 | <9.8 | <9.6 | <9.6 | <9.4 | <9.6 | <9.4 | <9.4 | |
| Benzo[a]pyrene | <9.6 | <9.4 | <9.8 | <9.6 | <9.6 | <9.4 | <9.6 | <9.4 | <9.4 | |
| Benzo[b]fluoranthene | <9.6 | <9.4 | <9.8 | <9.6 | <9.6 | <9.4 | <9.6 | <9.4 | <9.4 | |
| Benzo[ghi]perylene | <9.6 | <9.4 | <9.8 | <9.6 | <9.6 | <9.4 | <9.6 | <9.4 | <9.4 | |
| Benzo[a]anthracene | <9.6 | <9.4 | <9.8 | <9.6 | <9.6 | <9.4 | <9.6 | <9.4 | <9.4 | |
| Chrysene | <9.6 | <9.4 | <9.8 | <9.6 | <9.6 | <9.4 | <9.6 | <9.4 | <9.4 | |
| Dibenz[a,h]anthracene | <9.6 | <9.4 | <9.8 | <9.6 | <9.6 | <9.4 | <9.6 | <9.4 | <9.4 | |
| Fluoranthene | <9.6 | <9.4 | <9.8 | <9.6 | <9.6 | <9.4 | <9.6 | <9.4 | <9.4 | 3980 |
| Fluorene | <9.6 | <9.4 | <9.8 | <9.6 | <9.6 | <9.4 | <9.6 | <9.4 | <9.4 | |
| Indeno [1,2,3-cd]pyrene | <9.6 | <9.4 | <9.8 | <9.6 | <9.6 | <9.4 | <9.6 | <9.4 | <9.4 | |
| 2-Methylnaphthalene | <9.6 | <9.4 | <9.8 | <9.6 | <9.6 | <9.4 | <9.6 | <9.4 | <9.4 | |
| Napthalene | <9.6 | <9.4 | <9.8 | <9.6 | <9.6 | <9.4 | <9.6 | <9.4 | <9.4 | 2300 620 |
| Phenanthrene | <9.6 | <9.4 | <9.8 | <9.6 | <9.6 | <9.4 | <9.6 | <9.4 | <9.4 | |
| Pyrene | <9.6 | <9.4 | <9.8 | <9.6 | <9.6 | <9.4 | <9.6 | <9.4 | <9.4 | |

[1] CMC- acute - ambient water quality criteria – freshwater lowest observable effect level
[2] CCC- chronic - ambient water quality criteria – freshwater lowest observable effect level

| Table 12. Dioxin in sediment (University of Arkansas 1992). | | | |
|---|---|---|---|
| Station Number | Stream Location | 2,3,7,8-TCDD (ppt) | UEL Guideline [1] |
| Bayou Macon | | | |
| 1 | Macon Bridge | 0.260 | 8.8 |
| 2 | New (Caddo) Bridge | 0.490 | |
| 3 | Highway 167 | 199. | |
| 4 | Reeds Bridge | 276. | |
| 6 | Broken Bridge | 197. | |
| 7 | I-40 | 39.7 | |
| 8 | Highway 15 | 46. | |
| 10 | Culler | 24.2 | |
| 13 | Highway 79 | 4.2 | |
| 14 | Highway 152 | 5.6 | |
| 15 | Wildlife Mgt. Area | 5.3 | |
| 16 | Highway 11 | 1.4 | |
| Wattensaw Bayou (background sample) | | | |
| 19 | Highway 11 | 0.420 | 8.8 |
| 20 | Wildlife Mgt. Area | 0.280 | |

[1] Upper effects threshold for *Hyalella azteca* bioassay in freshwater sediments (1999).

Table 13. Samples collected by MVK for metals in sediment.

| Parameter (mg/kg) | LBM -01 | TPB-01 | Bayou Meto -1 | BM HW 11 | WB-01 | WB-02 | Indian Bayou-01 | Indian Bayou Ditch | Crooked Creek | BM-10 Little Bayou Meto | BM-11 Bayou Meto | BM-12 Five Fork | BM-13 Two Prairie Bayou | BM-14 Indian Bayou | Guidelines ERL[1] ERM[2] | Guidelines Earth's Crust[3] |
|---|---|---|---|---|---|---|---|---|---|---|---|---|---|---|---|---|
| | August 2000 | | | | | | | | | January 2001 | | | | | NOAA | USGS |
| Antimony | - | 0.66 | 0.74 | - | 0.69 | 1.61 | 1.03 | 0.98 | 0.85 | 0.70 | 0.67 | 0.75 | 0.79 | 0.57 | - | - |
| Arsenic | - | 2.8 | 2.77 | - | 5.43 | 8.39 | 9.28 | 5.13 | 8.05 | 5.99 | 4.40 | 5.70 | 5.30 | 2.80 | 8.2<br>70. | 7.4 |
| Beryllium | - | 0.899 | 0.900 | - | 0.800 | 1.20 | 1.30 | 1.10 | 1.10 | 1.20 | 1.60 | 1.30 | 0.800 | 0.899 | - | - |
| Cadmium | - | 0.174 | 0.082 | - | 0.192 | 0.593 | 0.295 | 0.229 | 0.080 | 0.439 | 0.150 | 0.150 | 0.270 | 0.180 | 1.2<br>9.6 | - |
| Chromium | - | 19.7 | 24.1 | - | 21.6 | 31.9 | 30.4 | 28.8 | 29.1 | 28.4 | 28.4 | 18.5 | 15.2 | 12.3 | 81<br>370 | 52 |
| Copper | - | 9.29 | 7.40 | - | 10.5 | 24.0 | 17.0 | 14.9 | 10.5 | 19.9 | 13.9 | 14.8 | 12.2 | 10.6 | 34<br>270 | 22 |
| Lead | - | 18.4 | 17.6 | - | 15.2 | 38.2 | 19.7 | 21.0 | 19.7 | 19.1 | 15.7 | 16.4 | 40.4 | 10.1 | 46.7<br>218 | 17 |
| Mercury | - | 0.067 | 0.032 | - | 0.023 | 0.065 | 0.039 | 0.039 | 0.018 | 0.0447 | 0.0148 | 0.0203 | 0.1230 | 0.0143 | 0.15<br>0.71 | 0.12 |
| Nickel | - | 11.7 | 12.8 | - | 15.8 | 21.7 | 22.6 | 19.8 | 18.0 | 23.4 | 25.2 | 19.9 | 10.5 | 15.0 | 20.9<br>51.6 | 18 |
| Selenium | - | 0.75 | 0.71 | - | 0.57 | 0.91 | 1.07 | 0.81 | 0.68 | 0.599 | 0.500 | 0.400 | 0.600 | 0.400 | - | 0.45 |
| Silver | - | 0.29 | <0.10 | - | <0.10 | 0.11 | <0.10 | 0.29 | <0.10 | <0.100 | <0.100 | <0.100 | <0.100 | <0.100 | 1<br>3.7 | - |
| Thallium | - | 0.36 | 0.39 | - | 0.25 | 0.37 | 0.38 | 0.32 | 0.30 | 0.200 | 0.300 | 0.200 | <0.200 | <0.200 | - | - |
| Zinc | - | 51.3 | 48.4 | - | 133 | 165 | 72.1 | 71.4 | 46.1 | 85.7 | 63.9 | 51.3 | 53.3 | 42.9 | 150<br>410 | 52 |
| TOC | - | 40000 | 16600 | - | 5890 | 31600 | 25500 | 23700 | 10600 | 39300 | 4700 | 4720 | 43200 | 7400 | - | - |

[1] ERL Effects Range-Low
[2] ERM Effects Range Median
[3] Mean concentration of elements in soils in the Eastern United States.

Table 14. Samples collected by MVK for pesticides and PCBs in sediment.

| Parameter (µg/kg) | LBM - 01 | TPB-01 | Bayou Meto -1 | BM HW 11 | WB-01 | WB-02 | Indian Bayou-01 | Indian Bayou Ditch | Crooked Creek | Criteria ERL[1] ERM[2] |
|---|---|---|---|---|---|---|---|---|---|---|
| | August 2000 | | | | | | | | | |
| Aldrin | - | <1.70 | <1.27 | - | <1.25 | <1.35 | <1.86 | <1.34 | <1.28 | |
| A-BHC | - | <1.70 | <1.27 | - | <1.25 | <1.35 | <1.86 | <1.34 | <1.28 | |
| B-BHC | - | 2.90 | <1.27 | - | 2.81 | 2.95 | <1.86 | 5.08 | 1.29 | |
| G-BHC | - | <1.70 | <1.27 | - | 0.85 J | <1.35 | <1.86 | 1.07 J | 0.68 J | |
| D-BHC | - | <1.70 | <1.27 | - | <1.25 | <1.35 | <1.86 | <1.34 | <1.28 | |
| pp-DDD | - | <3.40 | 5.06 | - | 51.9 | 75.2 | 37.3 | 145 | 4.49 | 2<br>20 |
| pp-DDE | - | 5.68 | 8.50 | - | 76.3 | 149 | 123 | 343 | 11.6 | 2.2<br>27 |
| pp-DDT | - | <3.40 | <2.55 | - | 13.0 | 15.1 | 35.4 | 61.2 | 3.51 | 1<br>7 |
| Heptachlor | - | <1.70 | <1.27 | - | <1.25 | <1.35 | <1.86 | <1.34 | <1.28 | |
| Dieldrin | - | <3.40 | <2.55 | - | <2.50 | <2.70 | <3.72 | <2.68 | <2.56 | 0.02<br>8 |
| A-Endosulfan | - | <1.70 | <1.27 | - | <1.25 | <1.35 | <1.86 | <1.34 | <1.28 | |
| B-Endosulfan | - | <3.40 | <2.55 | - | <2.50 | <2.70 | <3.72 | <2.68 | <2.56 | |
| Endosulfan Sulfate | - | <3.40 | <2.55 | - | 2.61 | 3.43 | <3.72 | <2.68 | <2.56 | |
| Endrin | - | 5.58 | 1.68 | - | 3.66 | <2.70 | <3.72 | 14.1 | 1.44 J | |
| Endrin Aldehyde | - | 2.23 | <2.55 | - | <2.50 | <2.70 | <3.72 | 11.5 | <2.56 | |
| Heptachlor Epoxide | - | <1.70 | <1.27 | - | <1.25 | <1.35 | <1.86 | <1.34 | <1.28 | |
| Methoxychlor | - | <17.0 | <12.7 | - | <12.5 | <13.5 | <18.6 | <13.4 | <12.8 | |
| Chlordane | - | <17.0 | <12.7 | - | <12.5 | <13.5 | <18.6 | <13.4 | <12.8 | |
| Toxaphene | - | <17.0 | <12.7 | - | <12.5 | <13.5 | <18.6 | <13.4 | <12.8 | |
| Total PCBs | - | <17.0 | <12.7 | | <12.5 | <13.5 | <18.6 | <13.4 | <12.8 | 22.7<br>180 |

Table 15. Samples collected by MVK for herbicides in sediment.

| Parameter (µg/kg) | LBM - 01 | TPB-01 | Bayou Meto -1 | BM HW 11 | WB-01 | WB-02 | Indian Bayou-01 | Indian Bayou Ditch | Crooked Creek | BM-10 Little Bayou Meto | BM-11 Bayou Meto | BM-12 Five Fork | BM-13 Two Prairie Bayou | BM-14 Indian Bayou | Criteria |
|---|---|---|---|---|---|---|---|---|---|---|---|---|---|---|---|
| | August 2000 | | | | | | | | | January 2001 | | | | | |
| 2,4-D | - | <13.6 | <10.3 | - | <10.1 | <10.8 | <14.8 | <10.9 | <10.2 | <18.8 | <9.48 | <9.47 | <14.5 | <9.54 | |
| 2,4-DP | - | <13.6 | <10.3 | - | <10.1 | <10.8 | <14.8 | <10.9 | <10.2 | <18.8 | <9.48 | <9.47 | <14.5 | <9.54 | |
| 2,4,5-T | - | <3.40 | <2.56 | - | <2.52 | <2.70 | <3.70 | 1.46 J | <2.54 | <4.70 | <2.37 | <2.37 | <3.62 | <2.38 | |
| 2,4,5-TP | - | <3.40 | <2.56 | - | <2.52 | <2.70 | <3.70 | <2.73 | <2.54 | 7.32 | <2.37 | <2.37 | <3.62 | <2.38 | |
| 2,4-DB | - | <13.6 | <10.3 | - | <10.1 | <10.8 | <14.8 | 38.8 B | 26.1B | <18.8 | <9.48 | <9.47 | <14.5 | <9.54 | |
| Dinoseb | - | <3.40 | <2.56 | - | <2.52 | <2.70 | <3.70 | <2.73 | <2.54 | <4.70 | 4.80 | <2.37 | <3.62 | <2.38 | |
| DCAA % (surrogate) | - | 123 | 99.5 | - | 114 | 126 | 146 | 101 | 103 | 110 | 45.0 | 61.5 | 23.3 | 64.9 | |
| MCPA | - | <1361 | <1026 | - | <1009 | <1079 | <1480 | <1092 | <1016 | <1880 | <948 | 23400B | 2093B | 10000B | |
| MCPP | - | 3522 | <1026 | - | <1009 | <1079 | <1480 | <1092 | <1016 | <1880 | <948 | <947 | <1449 | <954 | |
| Dalapon | - | <6.81 | <5.13 | - | <5.05 | <5.40 | <7.40 | <5.46 | <5.08 | <9.40 | <4.74 | <4.73 | <7.25 | <4.77 | |
| Dicamba | - | <6.81 | <5.13 | - | <5.05 | <5.40 | <7.40 | <5.46 | <5.08 | <9.40 | <4.74 | <4.73 | <7.25 | <4.77 | |

2,4-DB method blank for Aug 2000 = 31.3 µg/kg
MCPA method blank for Jan 2001 = 2193 µg/kg

Table 16. Samples collected by MVK for PAHs in sediment.

| Parameter (µg/kg) | LBM - 01 | TPB-01 | Bayou Meto -1 | BM HW 11 | WB-01 | WB-02 | Indian Bayou-01 | Indian Bayou Ditch | Crooked Creek | Guidelines ERL[1] ERM[2] |
|---|---|---|---|---|---|---|---|---|---|---|
| | August 2000 | | | | | | | | | |
| Acenaphthene | - | <690 | <510 | - | <510 | <530 | <740 | <550 | <510 | 16<br>500 |
| Acenaphthylene | - | <690 | <510 | - | <510 | <530 | <740 | <550 | <510 | 44<br>640 |
| Anthracene | - | <690 | <510 | - | <510 | <530 | <740 | <550 | <510 | 85.3<br>1100 |
| Benzo[k]fluoranthene | - | <690 | <510 | - | <510 | <530 | <740 | <550 | <510 | |
| Benzo[a]pyrene | - | <690 | <510 | - | <510 | <530 | <740 | <550 | <510 | 430<br>1600 |
| Benzo[b]fluoranthene | - | <690 | <510 | - | <510 | <530 | <740 | <550 | <510 | |
| Benzo[ghi]perylene | - | <690 | <510 | - | <510 | <530 | <740 | <550 | <510 | |
| Benzo[a]anthracene | - | <690 | <510 | - | <510 | <530 | <740 | <550 | <510 | 261<br>1600 |
| Chrysene | - | <690 | <510 | - | <510 | <530 | <740 | <550 | <510 | 384<br>2800 |
| Dibenz[a,h]anthracene | - | <690 | <510 | - | <510 | <530 | <740 | <550 | <510 | 63.4<br>260 |
| Fluoranthene | - | <690 | 370 J | - | <510 | <530 | <740 | <550 | <510 | 600<br>5100 |
| Fluorene | - | <690 | <510 | - | <510 | <530 | <740 | <550 | <510 | 19<br>540 |
| Indeno [1,2,3-cd]pyrene | - | <690 | <510 | - | <510 | <530 | <740 | <550 | <510 | |
| 2-Methylnaphthalene | - | <690 | <510 | - | <510 | <530 | <740 | <550 | <510 | 70<br>670 |
| Napthalene | - | <690 | <510 | - | <510 | <530 | <740 | <550 | <510 | 160<br>2100 |
| Phenanthrene | - | <690 | <510 | - | <510 | <530 | <740 | <550 | <510 | 240<br>1500 |
| Pyrene | - | <690 | 270 J | - | <510 | <530 | <740 | <550 | <510 | 665<br>2600 |

[1] ERL - Environmental Response Low
[2] ERM- Environmental Response Median

# BAYOU METO COMPREHENSIVE STUDY
# BAYOU METO BASIN, ARKANSAS

## APPENDIX C

## ENGINEERING INVESTIGATIONS & ANALYSES
## FLOOD CONTROL COMPONENT

## SECTION IV

## STRUCTURAL, MECHANICAL, ELECTRICAL AND CIVIL DESIGN

Appendix C - Engineering Investigations & Analyses
Flood Control Component

Section IV - Structural, Mechanical, Electrical & Civil Design

TABLE OF CONTENTS


| Paragraph | Title | Page No. |
|---|---|---|
| | **Part A - Structural Design** | |
| IV-A-1 | General | IV-1 |
| IV-A-2 | Little Bayou Meto Pump Station | IV-1 |
| IV-A-2-a | Inlet Channel | IV-1 |
| IV-A-2-a-1 | 1,000-CFS Station | IV-2 |
| IV-A-2-a-2 | 3,000-CFS Station | IV-2 |
| IV-A-2-b | Inlet Retaining Walls | IV-2 |
| IV-A-2-b-1 | 1,000-CFS Station | IV-2 |
| IV-A-2-b-2 | 3,000-CFS Station | IV-2 |
| IV-A-2-c | Pump Station Substructure | IV-3 |
| IV-A-2-c-1 | 1,000-CFS Station | IV-3 |
| IV-A-2-c-2 | 3,000-CFS Station | IV-3 |
| IV-A-2-d | Pump Station Superstructure | IV-3 |
| IV-A-2-d-1 | 1,000-CFS Station | IV-3 |
| IV-A-2-d-2 | 3,000-CFS Station | IV-3 |
| IV-A-2-e | Discharge Pipes | IV-3 |
| IV-A-2-e-1 | 1,000-CFS Station | IV-4 |
| IV-A-2-e-2 | 3,000-CFS Station | IV-4 |
| IV-A-2-f | Outfall Structure | IV-4 |
| IV-A-2-f-1 | 1,000-CFS Station | IV-4 |
| IV-A-2-f-2 | 3,000-CFS Station | IV-4 |
| IV-A-3 | Cannon Break Extension Structure | IV-4 |
| IV-A-3-a | Retaining Walls | IV-4 |
| IV-A-3-a-1 | Inlet Walls | IV-5 |
| IV-A-3-a-2 | Outlet Walls | IV-5 |

TABLE OF CONTENTS (cont'd)


| Paragraph | Title | Page No. |
|---|---|---|
| IV-A-3-b | Gated Structure | IV-5 |
| IV-A-3-b-1 | 3-Gated Control Structure | IV-5 |
| IV-A-3-b-2 | 5-Gated Control Structure | IV-5 |
| IV-A-3-c | Vehicular Access Bridge | IV-5 |
| IV-A-3-d | Stone Protection | IV-5 |
| IV-A-4 | Bayou Meto WMA Control Structures | IV-6 |
| IV-A-4-a | Retaining Walls | IV-6 |
| IV-A-4-b | Control Structure | IV-6 |
| IV-A-4-b-1 | Salt Bayou Control Structure | IV-6 |
| IV-A-4-b-2 | Dry Bayou Control Structure | IV-6 |
| IV-A-4-c | Hinged Crest Gate | IV-6 |
| IV-A-4-c-1 | Salt Bayou Control Structure | IV-7 |
| IV-A-4-c-2 | Dry Bayou Control Structure | IV-7 |
| IV-A-4-d | Equipment Building | IV-7 |
| IV-A-4-e | Stone Protection | IV-7 |


**Part B - Mechanical Design**


| | | |
|---|---|---|
| IV-B-1 | Little Bayou Meto Pump Station | IV-7 |
| IV-B-1-a | General | IV-7 |
| IV-B-1-b | 1000-CFS Station | IV-7 |
| IV-B-1-b-1 | Discharge Pipes | IV-8 |
| IV-B-1-b-2 | Siphon Breaking Valve Assembly | IV-9 |
| IV-B-1-b-3 | Pump Intake, Bar Screen & Trash Rake | IV-9 |
| IV-B-1-b-4 | Sump Dewatering | IV-9 |
| IV-B-1-b-5 | Station Bridge Crane | IV-9 |
| IV-B-1-b-6 | Station Ventilation | IV-9 |
| IV-B-1-c | 3000-CFS Station | IV-10 |
| IV-B-1-c-1 | Discharge Pipes | IV-11 |
| IV-B-1-c-2 | Siphon Breaking Valve Assembly | IV-11 |

TABLE OF CONTENTS (cont'd)


| Paragraph | Title | Page No. |
|---|---|---|
| IV-B-1-c-3 | Pump Intake, Bar Screen & Trash Rake | IV-11 |
| IV-B-1-c-4 | Sump Dewatering | IV-11 |
| IV-B-1-c-5 | Station Bridge Crane | IV-11 |
| IV-B-1-c-6 | Station Ventilation | IV-12 |
| IV-B-2 | Cannon Break Extension Structure | IV-12 |
| IV-B-3 | Salt Bayou and Dry Bayou Hinged Crest Gated Structures | IV-12 |
| IV-B-3-a | General | IV-12 |
| IV-B-3-b | Hydraulic Cylinders | IV-12 |
| IV-B-3-c | Power Unit | IV-12 |
| IV-B-3-d | Controls and Piping | IV-13 |
| IV-B-3-e | Gate Connection | IV-13 |
| IV-B-4 | Boggy Slough Water Control Structure | IV-13 |
| | **Part C - Electrical Design** | |
| IV-C-1 | General | IV-13 |
| IV-C-2 | Little Bayou Meto Pump Station | IV-14 |
| IV-C-2-a | Electrical Design | IV-14 |
| IV-C-2-b | Electrical Systems and Equipment | IV-14 |
| IV-C-2-b-1 | Electric Motor Alternative - 1000-CFS Pump | IV-14 |
| IV-C-2-b-2 | Electric Motor Alternative - 3000-CFS Pump | IV-14 |
| IV-C-2-c | Electric Power Supply | IV-14 |
| IV-C-2-d | Power and Energy Analysis | IV-15 |
| IV-C-2-d-1 | Phase I | IV-15 |
| IV-C-2-d-1-a | Pump Motor Sizes | IV-15 |
| IV-C-2-d-1-b | Pump Station Sizes | IV-15 |

TABLE OF CONTENTS (cont'd)


| Paragraph | Title | Page No. |
|---|---|---|
| IV-C-2-d-1-c | Number of Pumps/Station | IV-15 |
| IV-C-2-d-2 | Phase II | IV-16 |
| IV-C-2-d-3 | Phase III | IV-16 |
| IV-C-2-d-4 | Phase IV | IV-16 |
| IV-C-2-e | Fixed Costs | IV-16 |
| IV-C-2-f | Annual Costs | IV-16 |
| IV-C-3 | Cannon Break Extension Structure | IV-16 |
| IV-C-4 | Bayou Meto WMA Hinged Crest | IV-16 |
| | **Part D - Civil Design** | |
| IV-D-1 | General | IV-17 |
| IV-D-2 | Boggy Slough Water Control Structure | IV-17 |
| IV-D-3 | Boggy Slough Bypass | IV-17 |
| IV-D-3-a | Boggy Slough Weir, Mile 0.1 | IV-17 |
| IV-D-3-b | Boggy Slough Weir, Mile 4.97 | IV-18 |
| IV-D-3-c | Castor Bayou Drop Structure | IV-18 |
| IV-D-4 | Indian Bayou Ditch Weir | IV-19 |
| IV-D-5 | Indian Bayou Channel Weir | IV-19 |
| IV-D-6 | Crooked Creek Weir Modifications | IV-19 |
| IV-D-7 | Big Bayou Meto Diversion Weirs | IV-20 |
| IV-D-7-a | Low Water Weir, Mile 0.0 | IV-20 |
| IV-D-7-b | Low Water Weir, Mile 2.5 | IV-20 |

Appendix C - Engineering Investigations & Analyses
Flood Control Component

Section IV - Structural, Mechanical, Electrical & Civil Design

LIST OF PLATES


| Plate No. | Title |
|---|---|
| IV-01 | Site Plan - 1000-cfs Pumping Station |
| IV-02 | Plan - 1000-cfs Pumping Station |
| IV-03 | Section - 1000-cfs Pumping Station |
| IV-04 | Site Plan - 3000-cfs Pumping Station |
| IV-05 | Plan - 3000-cfs Pumping Station |
| IV-06 | Section - 3000-cfs Pumping Station |
| IV-07 | Site Plan - Cannon Break Extension Structure |
| IV-08 | Plan & Section - Cannon Break Extension Structure for 1000-cfs Pumping Station |
| IV-09 | Plan & Section - Cannon Break Extension Structure for 3000-cfs Pumping Station |
| IV-10 | Site Plan - Bayou Meto Wildlife Management Area Control Structures |
| IV-11 | Plan, Elevation & Section - Salt Bayou Control Structure |
| IV-12 | Plan, Elevation & Section - Dry Bayou Control Structure |
| IV-13 | Plan & Elevation - Boggy Slough Water Control Structure |
| IV-14 | Plan & Elevation - Boggy Slough Diversion Channel Structure, Mile 0.1 |

LIST OF PLATES (cont'd)


| Plate No. | Title |
|---|---|
| IV-15 | Plan & Elevation - Boggy Slough Diversion Channel Structure, Mile 4.97 |
| IV-16 | Plan & Elevation - Castor Bayou Low Drop Grade Control Structure |
| IV-17 | Plan & Elevation - Indian Bayou Weir, Mile 58.0 |
| IV-18 | Plan & Elevation - Indian Bayou Weir, Mile 16.4 |
| IV-19 | Section - Crooked Creek Weir Modification |
| IV-20 | Plan & Elevation - Big Bayou Meto Diversion Weir, Mile 0.0 |
| IV-21 | Plan & Elevation - Big Bayou Meto Diversion Weir, Mile 2.5 |

Appendix C - Engineering Investigations & Analyses
Flood Control Component

Section IV - Structural, Mechanical, Electrical & Civil Design

APPENDICES

| **Appendix No.** | **Title** |
|---|---|
| IV-C-A | Table, Pump Curve Data |
| IV-C-B | Table, Pump Curve Data |
| IV-C-C | Voltage Motor Controller Ratings |
| IV-C-D | Electric Power Supply Correspondence |
| IV-C-E | Induction Motor Data |
| IV-C-F | Switchgear Specifications |
| IV-C-G | Pump Operating Cost Data |
| IV-C-H | Electric Metering and Billing Histories |

Appendix C - Engineering Investigations & Analyses
Flood Control Component

Section IV - Structural, Mechanical, Electrical & Civil Design

## Part A - Structural Design

IV-A-1. GENERAL. The structural flood control features for the alternatives investigated for the project included several pumping plant and control structure alternatives. The pumping plant alternatives included a pump station with either a 5,000 or a 10,000 cubic feet per second (cfs) pumping capacity adjacent to the Big Bayou Meto Drainage Structure and a pump station with either a 1,000-cfs or a 3,000-cfs pumping capacity adjacent to the Little Bayou Meto Drainage Structure. The Big Bayou Meto pumping station alternative was dropped prior to design. The control structure alternatives include slide gated control structures, hinged crest gated control structures and a slide gated box culvert. The structural quantities for all examined alternatives were developed and are reflected in the cost estimates.

IV-A-2. LITTLE BAYOU METO PUMP STATION. The Little Bayou Meto pump station is located on the west side of the existing channel adjacent to the drainage structure at the lower end of Little Bayou Meto. Two alternatives were examined: a 1,000-cfs and a 3,000-cfs pumping station. Each pump station was laid out similarly with an inlet channel, inlet channel retaining walls, a pumping plant with a superstructure and a substructure, discharge lines crossing over the levee on the northwest side of the existing drainage structure and an outfall structure. Plate IV-01 shows the site layout for the 1,000-cfs Pump Station. Plate IV-02 is the plan for the 1,000-cfs Pump Station. Plate IV-03 is a typical section through the 1,000-cfs Pump Station. Plate IV-04 shows the site layout for the 3,000-cfs Pump Station. Plate IV-05 is the plan for the 3,000-cfs Pump Station. Plate IV-06 is a typical section through the 3,000-cfs Pump Station.

IV-A-2-a. Inlet Channel. A riprap lined inlet channel connects Little Bayou Meto to the pump station.

IV-A-2-a-1. 1,000-cfs Station. The channel thalweg, beginning at the inlet side of the pump station, is at Elevation 149.5, NGVD, for a distance of 50 feet and then transitions to Elevation 159.0, NGVD, on a 1V on 20H slope. The thalweg remains at Elevation 159.0, NGVD, until it enters the existing Little Bayou Meto channel. The channel bottom width is 45 feet at the pump station and for a distance of 50 feet upstream with channel side slopes of 1V on 4H. The channel bottom width then contracts to 30 feet in a distance of 180 feet. The channel side slops transitions to 1V on 3H in a distance of 60 feet, and then remains at 1V on 3H until the channel bottom reaches Elevation 159.0, NGVD. The channel bottom width then remains at 30 feet with side slopes of 1V on 3H.

IV-A-2-a-2. 3,000-cfs Station. The channel thalweg, beginning at the inlet side of the pump station, is at Elevation 145.0, NGVD, for a distance of 60 feet and then transitions to Elevation 159.0, NGVD, on a 1V on 20H slope. The thalweg remains at Elevation 159.0, NGVD, until it enters the existing Little Bayou Meto channel. The channel bottom width is 93 feet at the pump station and for a distance of 60 feet upstream with channel side slopes of 1V on 4H. The channel bottom width then contracts to 30 feet in a distance of 280 feet. The channel side slopes transitions to 1V on 3H in a distance of 212 feet, and then remains at 1V on 3H until the channel bottom reaches Elevation 159.0, NGVD. The channel bottom width then remains at 30 feet with side slopes of 1V on 3H.

IV-A-2-b. Inlet Retaining Walls. Inlet retaining walls are used to retain the backfill upstream from the pump station. The retaining walls consist of concrete reinforced inverted t-wall monoliths running perpendicular to the channel centerline extends from either side of the pump station to the top bank of the inlet channel.

IV-A-2-b-1. 1,000-cfs Station. The inlet retaining walls, inverted t-walls, extend from the upstream end of the substructure perpendicular to the channel centerline for a distance of 127.5 feet. There are two walls, one on each side of the channel centerline. They retain the backfill against the substructure.

IV-A-2-b-2. 3,000-cfs Station. The inlet retaining walls, inverted t-walls, extend from the upstream end of the substructure perpendicular to the channel centerline for a

distance of 168.0 feet. There are two walls, one on each side of the channel centerline. They retain the backfill against the substructure.

IV-A-2-c. Pump Station Substructure. The pump station substructure consist of that part of the pump station that lies beneath the operating floor of the station, and includes the trash racks, the formed suction intakes and the foundation, and the bottom slab for the service bay.

IV-A-2-c-1. 1,000-cfs Station. The substructure extends between Elevation 184.0, NGVD, the operating floor elevation, and Elevation 147.5, NGVD, the bottom of the structure. The portion of the service bay below Elevation 184.0, NGVD, is part of the substructure. The service bay, located on the west end of the pump station, at Elevation 182.0, NGVD, is two feet lower than the operating floor.

IV-A-2-C-2. 3,000-cfs Station. The substructure extends between Elevation 187.0, NGVD, the operating floor elevation, and Elevation 143.7, NGVD, the bottom of the structure. The portion of the service bay below Elevation 187.0, NGVD, is part of the substructure. The service bay, located on the west end of the pump station, at Elevation 184.0, NGVD, is three feet lower than the operating floor.

IV-A-2-d. Pump Station Superstructure. The pump station superstructure consists of that part of the pump station that lies above the substructure and includes the building, and the service crane (a bridge crane).

IV-A-2-d-1. 1,000-cfs Station. The superstructure consists of a steel frame supported, precast concrete panel wall and roof. The service crane has a lifting capacity of 20 tons. The building is 77.0 feet by 38.75 feet with a height of 28.0 feet at the upstream side and a height of 25.67 feet at the downstream side.

IV-A-2-d-2. 3,000-cfs Station. The superstructure consists of a steel frame supported, precast concrete panel wall and roof. The service crane has a lifting capacity of 35 tons. The building is 115.0 feet by 60.67 feet with a height of 44.75 feet at the upstream side and a height of 40.67 feet at the downstream side.

IV-A-2-e. Discharge Pipes. There is a discharge pipe for each pump. The discharge pipes exit the downstream end of

the pump station, turn approximately 45° eastward, cross under the access road, cross over the levee and end up at the outfall structure located in the outlet channel for the Little Bayou Meto Drainage Structure. The discharge ends of the pipes are turned upward 90° to form a gooseneck. The pipes are buried. Concrete and H-pile thrust blocks are supplied at all changes in direction for the discharge pipes.

IV-A-2-e-1. 1,000-cfs Station. Each discharge pipe is 96 inches in diameter with a wall thickness of ½-inch. The discharge pipes have lengths of 628 feet and 648 feet.

IV-A-2-e-2. 3,000-cfs Station. Each discharge pipe is 120 inches in diameter with a wall thickness of ½-inch. The discharge pipes have lengths of 646 feet, 618 feet and 590 feet.

IV-A-2-f. Outfall Structure. The outfall structure consists of a reinforced concrete slab surrounding the goose necked outfall on the discharge pipes.

IV-A-2-f-1. 1,000-cfs Station. The outfall structure is 72.5 feet by 58.0 feet. The reinforced concrete slab is 2.0 feet thick. The perimeter of the outfall structure has an embedded sheetpile scour wall 10.0 feet deep.

IV-A-2-f-2. 3,000-cfs Station. The outfall structure is 93.5 feet by 60.0 feet. The reinforced concrete slab is 2.0 feet thick. The perimeter of the outfall structure has an embedded sheetpile scour wall 10.0 feet deep.

IV-A-3. CANNON BREAK EXTENSION STRUCTURE. The Cannon Break Extension Structure is located in the dam adjacent to the Cannon Break Structure. The structure is located approximately 100 feet westward from the existing Cannon Break Structure. The structure consists of a gated control structure with inlet and outlet retaining walls, a vehicular bridge across the top of the gated control structure, and riprap lined inlet and outlet channels. Plate IV-07 gives the site location for the Cannon Break Extension Structure. Plate IV-08 depicts the plan for the 3-gated control structure, and Plate IV-09 depicts the plan for the 5-gated control structure.

IV-A-3-a. Retaining Walls. The retaining walls for the Cannon Break Extension Structure are used to retain the

material in the levee section at the structure. Inlet retaining walls are used to retain the backfill adjacent to either side of the structure.

IV-A-3-a-1. Inlet Walls. The retaining walls, concrete reinforced inverted t-walls, are each flared 30° away from the channel centerline. They extend from either end of the gated structure to the toe of the levee. Each inlet wall is 67.0 feet long, and varies in height from 17.7 feet to 4.2 feet.

IV-A-3-a-2. Outlet Walls. The retaining walls, concrete reinforced inverted t-walls, are each flared 30° away from the channel centerline. They extend from either end of the gated structure to the toe of the levee. Each inlet wall is 48.5 feet long, and varies in height from 20.8 feet to 2.2 feet.

IV-A-3-b. Gated Structure. The gated control structure consists of openings 10 feet wide by 10 feet high with slide gates provided for each opening. The invert elevation of the structure is 164.0, NGVD. The operating platform is at Elevation 189.0, NGVD. Each opening has provisions for stop logs for un-watering.

IV-A-3-b-1. 3-Gated Control Structure. The 3-gated structure is 46.0 feet long, and contains three slide gates. It will be used with the 1,000-cfs Little Bayou Meto Pump Station.

IV-A-3-b-2. 5-Gated Control Structure. The 5-gated structure is 74.0 feet long, and contains five slide gates. It will be used with the 3,000-cfs Little Bayou Meto Pump Station.

IV-A-3-c. Vehicular Access Bridge. A bridge spans each opening to provide vehicular access across the structure. Each span is 12 feet long by 12 feet wide with New Jersey Barriers. The road surface of each span is at Elevation 182.5, NGVD. The bridge span is designed to support the operational equipment used for maintenance and cleanout at this site.

IV-A-3-d. Stone Protection. Stone protection consisting of 18 inches of R90 riprap will be placed in the inlet and outlet channel.

IV-A-4. BAYOU METO WILDLIFE MANAGEMENT AREA CONTROL STRUCTURES. The Bayou Meto Wildlife Management Area Control Structures consist of hinged crest gated structures located on Salt Bayou and Dry Bayou. Each control structure consists of a reinforced concrete structure, hinged crest gate, retaining walls, control building, fenced compound and riprap-lined channels. Plate IV-10 is a site map showing the location of both the Salt Bayou and the Dry Bayou Control Structures. Plate IV-11 depicts the structure for the Salt Bayou Control Structure. Plate IV-12 depicts the structure for the Dry Bayou Control Structure.

IV-A-4-a. Retaining Walls. The four retaining walls are identical. They are located at the upstream and downstream ends of the control structure and retain the backfill behind the control structure to Elevation 183.0, NGVD. Each wall is 32.0 feet long.

IV-A-4-b. Control Structure. The control structure consists of a reinforced concrete structure with integral stilling basin. The crest is at Elevation 175.0, NGVD. The control structure is 54 feet long. The stilling basin is 25 feet long with invert at Elevation 172.0, NGVD. Chute blocks and baffle blocks and an end sill are integral to the stilling basin. The outlet channel is at Elevation 172.0, NGVD. A hinged crest gate is installed on the control structure.

IV-A-4-b-1. Salt Bayou Control Structure. The Salt Bayou Control Structure is 114.0 feet wide with a channel opening of 100.0 feet.

IV-A-4-b-2. Dry Bayou Control Structure. The Dry Bayou Control Structure is 38.0 feet wide with a channel opening of 24.0 feet.

IV-A-4-c. Hinged Crest Gate. A steel fabricated hinged crest gate is used to control water elevations upstream of each structure. The top of the hinged crest gate is at Elevation 181.0 feet, NGVD, in the raised position, and at Elevation 175.0, NGVD, in the lowered position. The hinged crest gate shown is the same gate used on the J. Bennett Waterway at both the Russell B. Long and Joe D. Waggonner, Jr. Locks and Dams. The design for this gate is covered in the documentation for the locks and dams.

IV-A-4-c-1. Salt Bayou Control Structure. The hinged crest gate is 100.0 feet long with a height of 6.0 feet.

IV-A-4-c-2. Dry Bayou Control Structure. The hinged crest gate is 24.0 feet long with a height of 6.0 feet.

IV-A-4-d. Equipment Building. The equipment building houses the hydraulic pumps and control units for the structure. The floor of the building is at Elevation 192.5, NGVD, which is 2.8 feet above the 100-year flood elevation of 189.7, NGVD, and 9.5 feet above the structure end wall elevation. The building measures 12.0 feet wide by 12.0 feet long by 12.5 feet high and is constructed of cast-in-place, reinforced concrete supported above the ground by four corner columns.

IV-A-4-e. Stone Protection. Stone protection consists of 18 inches of R90 riprap upstream and downstream of the control structure.

## Part B - Mechanical Design

IV-B-1. LITTLE BAYOU METO PUMP STATION

IV-B-1-a. General. The Little Bayou Meto Pump Station will be used to lower water elevations in the study area. Little Bayou Meto normally drains through the Arkansas River levee at the Little Bayou Meto Control Structure. When the Arkansas River is at high stages, the control structure will be closed and the pump station will be used to pump water from Little Bayou Meto up and over the Arkansas River levee to reduce interior water levels. This study considered three different pump station capacities, 1000, 3000 and 5000 cubic feet per second (cfs). The 5000-cfs station was determined early not to be feasible. A preliminary design and cost estimate was developed for the 1000 and 3000-cfs stations.

IV-B-1-b. 1000-cfs Station. The station will have a combined capacity of 1000-cfs at six feet average static head. The station shall have two, 500-cfs pumps which will be vertical axial/mixed flow type. The pumps shall use the low profile, type 10 formed suction intake (fsi) and shall have a discharge elbow. The pump design shall be the pull-out type, allowing for removal of the impeller bell, impeller, diffuser and lower shaft as a unit from above.

The pumps shall take advantage of siphonic recovery when possible to only pump against pool-to-pool head. The pumps shall have the capacity to prime the siphon without assistance by achieving a velocity greater then seven feet/second in the discharge pipe at the crown of the siphon during start up. The pumps shall be driven by electric motors; the motors shall provide anti-reversing devices to prevent reverse over-speeding of the pump when the motor is stopped. A vertical, parallel shaft, speed reducer shall be used to reduce the motor speed to the required pump speed. The speed reducer shall provide a thrust bearing to handle the pump thrust, and an oil cooling system with electric fan and radiator shall provide cooling for the speed reducer. The speed reducer shall be coupled to the pump with an adjustable coupling capable of adjusting the pump for proper clearance. Pump bearings shall be grease lubricated bronze/brash bushings with a timer controlled automatic grease lubrication system. Water lubricated pump bearings will be considered during detailed design work if a suitable source of clean lubrication water is available (reference Plates IV-02 and IV-03).

| | |
|---|---|
| Total Station Capacity | 1000-cfs |
| Pump Capacity (2 pumps) | 500-cfs |
| Average Static Head | 6 ft |
| Max Static Head, period of record | 18.91 ft |
| Discharge Pipe Size | 96 inch |
| Pump Type | Vertical Mixed Flow |
| Siphon Priming Capacity | 232-cfs |
| Siphon Priming Head | 35 ft |
| Pump Station Floor Elevation | 183.0 |
| fsi Bottom Elevation | 151.5 |
| Pump Start Elevation | 167.0 |
| Minimum Surface Elevation for Pumping | 163.0 |
| 100 Year Interior Elevation | 182.0 |

IV-B-1-b-1. Discharge Pipes. Each pump will discharge through a 96-inch pipe up and over the Arkansas River levee to a discharge structure consisting of a concrete pad and up-turned pipe exits. The pipe invert at the top of the levee shall be placed just above the project flowline elevation. These pipes shall have ½ inch wall thickness and welded joints. The pipes will be coated coal tar epoxy paint in accordance with AWWA.

IV-B-1-b-2. Siphon Breaking Valve Assembly. To prevent reverse siphoning into the protected area, each discharge pipe shall have a siphon breaking valve assembly. The siphon breaking valve assembly shall consist of an 8-inch butterfly valve with electric actuator and a "fail-safe", rechargeable battery power supply to open the valve in the case of power failure and associated piping. The siphon breaking valve assembly shall be located at the top of the levee and contained in a concrete pit for weather and damage protection.

IV-B-1-b-3. Pump Intake, Bar Screen and Trash Rake. The pumps shall use the low profile, type 10 fsi. The fsi shall be either an embedded steel liner or formed with concrete. The pump intake shall be protected by a bar screen type trash rack. The bar screens will have a maximum opening of four inches. A trash rake to remove debris from the trash rack shall be provided. The trash rake shall be a monorail crane type, similar to the Brackett Green Raking Machine, capable of removing the trash from the bar screens and carrying it to a dumpsite that can be serviced by removal equipment or dumped directly in to a truck or container.

IV-B-1-b-4. Sump Dewatering. The stoplog slot shall be provided upstream of the trash racks for dewatering. Portable pumps will be used to remove water from the pump intake area.

IV-B-1-b-5. Station Bridge Crane. A 20-ton bridge crane with top running trolley will be provided in the station for maintenance of the pumps and motors. The crane will have a span of 35 feet. The bridge, trolley and hoist shall be motorized and operated with pendant controls from the ground. The crane shall be provided with a single line auxiliary hoist.

IV-B-1-b-6. Station Ventilation. The station shall use two roof mounted exhaust fans for ventilation. The fans shall be 2000-cfm each, electric motor driven and centrifugal with roof curbs. Two air intake louvers will be located in the wall of the discharge side of the station, two feet above the ground, and directly inline with the pumps. The intake louvers shall have motorized dampers.

IV-B-1-c. 3000-cfs Station. The station will have a combined capacity of 3000-cfs at six feet average static head. The station shall have three, 1000-cfs pumps; the pumps shall be vertical axial/mixed flow type. The pumps shall use the low profile, type 10 formed suction intake (fsi) and the pumps shall have a discharge elbow. The pump design shall be the pull-out type, allowing for removal of the impeller bell, impeller, diffuser and lower shaft as a unit from above. The pumps shall take advantage of siphonic recovery when possible to only pump against pool-to-pool head. The pumps shall have the capacity to prime the siphon without assistance by achieving a velocity greater than seven feet/second in the discharge pipe at the crown of the siphon during start up. The pumps shall be driven by electric motors; the motors shall provide anti-reversing devices to prevent reverse over-speeding of the pump when the motor is stopped. A vertical, parallel shaft speed reducer shall be used to reduce the motor speed to the required pump speed. The speed reducer shall provide a thrust bearing to handle the pump thrust, and an oil cooling system with electric fan and radiator shall provide cooling for the speed reducer. The speed reducer shall be coupled to the pump with an adjustable coupling capable of adjusting the pump for proper clearance. Pump bearings shall be grease lubricated, bronze/brass bushings with a timer controlled, automatic grease lubrication system. Water lubricated pump bearings will be considered during detailed design work if a suitable source of clean lubrication water is available (reference Plates IV-05 and IV-06).

| | |
|---|---|
| Total Station Capacity | 3000-cfs |
| Pump Capacity (3 pumps) | 1000-cfs |
| Average Static Head | 6 ft |
| Max Static Head, period of Record | 25.18 ft |
| Discharge Pipe Size | 120-inch |
| Pump Type | Vertical Mixed Flow |
| Siphon Priming Capacity | 232-cfs |
| Siphon Priming Head | 37 ft |
| Pump Station Floor Elevation | 187.0 |
| fsi Bottom Elevation | 147.7 |
| Pump Start Elevation | 167.0 |
| Minimum Surface Elevation for Pumping | 163.0 |
| 100 Year Interior Elevation | 182.0 |

IV-B-1-c-1. Discharge Pipes. Each pump will discharge through a 120-inch pipe up and over the Arkansas River levee to a discharge structure consisting of a concrete pad and up-turned pipe exits. The pipe invert at the top of the levee shall be placed just above the project flowline elevation. These pipes shall have ½ inch wall thickness and welded joints. The pipes will be coated coal tar epoxy paint in accordance with AWWA.

IV-B-1-c-2. Siphon Breaking Valve Assembly. To prevent reverse siphoning into the protected area, each discharge pipe shall have a siphon breaking valve assembly. The siphon breaking valve assembly shall consist of a ten-inch butterfly valve with electric actuator and a "fail-safe", rechargeable battery power supply to open the valve in the case of power failure and associated piping. The siphon breaking valve assembly shall be located at the top of the levee and contained in a concrete pit for weather and damage protection.

IV-B-1-c-3. Pump Intake, Bar Screen and Trash Rake. The pumps shall use the low profile, type 10 fsi. The fsi shall be either an embedded steel liner or formed with concrete. The pump intake shall be protected by a bar screen type trash rack. The bar screens will have a maximum opening of five inches. A trash rake to remove debris from the trash rack shall be provided. The trash rake shall be a monorail crane type, similar to the Brackett Green Raking Machine, capable of removing the trash from the bar screens and carrying it to a dumpsite that can be serviced by removal equipment or dumped directly in to a truck or container.

IV-B-1-c-4. Sump Dewatering. The stoplog slot shall be provided upstream of the trash racks for dewatering. Portable pumps will be used to remove water from the pump intake area.

IV-B-1-c-5. Station Bridge Crane. A 35-ton bridge crane with top running trolley will be provided in the station for maintenance of the pumps and motors. The crane will have a span of 45 feet. The bridge, trolley and hoist shall be motorized and operated with pendant controls from the ground. The crane shall be provided with a single line auxiliary hoist.

IV-B-1-c-6. Station Ventilation. The station shall use three, roof mounted exhaust fans for ventilation. The fans shall be 3000-cfm each, electric motor driven and centrifugal with roof curbs. Three air intake louvers will be located in the wall of the discharge side of the station, two feet above the ground, and directly inline with the pumps. The intake louvers shall have motorized dampers.

IV-B-2. CANNON BREAK EXTENSION STRUCTURE. The Cannon Break Extension Structure is designed for either three or five gates, depending on the size of the pump station at Little Bayou Meto. The gates are the same size and type at each structure. The gates are standard cast iron sluice gates with wall thimbles. An electrically operated rising stem screw hoist shall be used to raise and lower the gates at approximately one foot/minute. A portable, engine-driven generator shall provide electrical power; the generator shall be sized to move two gates at once. The sluice gates and hoists are standard items from many manufacturers and no detailed design was developed for this study.

IV-B-3. SALT BAYOU AND DRY BAYOU HINGED CREST GATE STRUCTURES.

IV-B-3-a. General. The hinged crest gates at both of these structures shall be raised and lowered by means of hydraulic cylinders attached to the ends of the gate. Hydraulic power shall come from a single electric motor driven hydraulic pump. The operating machinery for Salt Bayou and Dry Bayou hinged crest gates shall be essentially the same for this study (reference Plates IV-11 and IV-12).

IV-B-3-b. Hydraulic Cylinders. The hydraulic cylinders shall be center trunnion mounted. The cylinders shall have a 10-inch bore diameter with a 5-inch rod diameter and a stroke length of 10.75 feet. The rod shall be stainless steel with threaded end. Fittings shall be either flanged or SAE-O-ring type. The trunnions shall be mounted in pillow block bearings with grease lubrication.

IV-B-3-c. Power Unit. The power unit shall consist of a variable displacement, axial piston pump driven by an electric motor. The motor and pump shall be mounted on a 150-gallon reservoir. The pump shall be rated at 15-gpm at 2000-psi. A device that will bring the pump from neutral

to full flow in approximately two seconds shall control the pump. A 20-horsepower electric motor shall power the unit. A duplex type hydraulic oil filter, pressure gauge and a system relief valve shall be included in the power unit.

IV-B-3-d. Controls and Piping. The gate shall be raised or lowered by the activation of a hydraulic control valve. The control valve shall be 4-way, 3-position, spring centered and electric solenoid operated. A counter-balance valve shall hold up the gate, and two relief valves shall protect the gate/cylinders. An operation station with raise, lower and stop buttons shall be provided at a location where the operator can see the gate. Piping shall be Schedule 160, stainless steel pipe with welded joints and socket-weld fittings. Piping to the far side cylinder shall be routed in a trench under the gate. Flexible hose shall be used to make connections to the cylinders to provide for movement during operation. The following sequence of operation is designed to prevent hydraulic shock: with the pump running and in the neutral position, select either raise or lower to begin moving the gate; the 4-way valve shall shift, then the pump controller shall shift the pump to provide flow; once the gate is in the desired position, press stop; then, the pump controller will shift the pump to neutral and the 4-way valve will shift to closed.

IV-B-3-e. Gate Connection. The cylinder shall be connected a section of steel pipe to complete the length required to reach the gate connection. The pipe and rod shall be connected with a threaded coupling. The pipe shall have a female clevis on the other end for connection the gate.

IV-B-4. BOGGY SLOUGH WATER CONTROL STRUCTURE. The Boggy Slough Water Control Structure has one sluice gate operated by a manual rising stem screw hoist, pedestal mounted. The gate and hoist are standard products of many manufacturers and no detail design was done for this study.

## Part C - Electrical Design

IV-C-1. GENERAL. This section presents the preliminary electrical design and analysis used in determining the

first costs and the average annual costs required for the feasibility study.

IV-C-2. LITTLE BAYOU METO PUMP STATION.

IV-C-2-a. Electric Design. The preliminary electrical design consisted of sizing the pump motors and selecting the switchgear. The technical basis and design criteria for the selection of type and configuration of electrical equipment are given in the EMs.[i,ii] See the Appendices IV-C-A and IV-C-B for tables of the pump curves input to HEC-IFH. Note that the curves are static H-Q pump curves; i.e., the pumping system is modeled, not just the pump bowl. Pump motor sizing (500 and 1000-cfs pumps) is also included. Typical medium-voltage motor controller ratings are given in Appendix IV-C-C.

IV-C-2-b. Electrical Systems and Equipment Requirements.

IV-C-2-b-1. Electric Motor Alternative - 1000-cfs Pump. The pump motor is a vertical induction, rated 4-kV, 1750-hp, 6-pole/1200-rpm, and coupled to pump with a speed reducer. The switchgear is metal-clad, rated 5-kV, with 600-A fused load-interrupter switch and digital multi-function metering. Motor controllers are medium-voltage, reduced-voltage autotransformer type for controlling pumps, with digital motor protection and monitoring relay. The motor control center is rated 489-V, 3-phase, 600-A with main breaker (225A/3P) and metering section (voltmeter, ammeter and ammeter switch) and auxiliary sections for motor auxiliaries and station service. The weights and dimensions of switchgear were based on GE switchgear (See Appendix IV-C-F).

IV-C-2-b-2. Electric Motor Alternative - 3000-cfs Pump. The vertical induction motors, three each, are rated 4-kV, 4000-hp, 6-pole/1200-rpm, with gear-drive coupled to pump. The metal-clad switchgear is rated 5-kV, with 2000-A main breaker. The motor control center is rated 480-V, 3-phase, 600-A with main breaker and metering section and auxiliary sections for motor auxiliaries and station service.

IV-C-2-c. Electric Power Supply. The fixed costs for the transmission line and substation, or distribution line and transformer bank, for each alternative were obtained from Entergy. The basis of Entergy's figures were estimates of the amount of power and energy the station would use. These estimates relied upon the preliminary electrical

design and energy analysis made for this study. Points of contact at Entergy were established early in the process (See the messages in Appendix IV-C-D).

IV-C-2-d. Power and Energy Analysis. One large pump station is planned at the Little Bayou Meto Drainage Structure. In support of the study to determine the most economical pump station capacity, the annual operating costs of operating the pump units were estimated.[iii] The power and energy analysis forecasts the average annual cost for only operating the pumps using IFH pump station operating data. Electric motors and diesel engines are the two prime movers that were considered. Electric power demand, electrical energy usage and diesel fuel consumption were computed over the period-of-record using motor and engine models and the pump operating records from the IFH continuous simulation analyses. However, the diesel fuel consumption was not pursued because of the favorable rate schedule that Entergy furnished; see correspondence, Appendix IV-C-D, subject: Entergy - Little Bayou Meto Pumping Plant for Rate SGS and Rider M1. Such a power and energy cost study consists of four phases.

IV-C-2-d-1. Phase I. For each alternative, obtain data from ED-H for selecting pump curves. Refer to Appendix IV-C-D, under CEMVK-ED-H - Little Bayou Meto Pumping Plant for related correspondence. Determine pump sizes, motor sizes, and station configuration:[iv]

IV-C-2-d-1-a. Pump Motor Sizes.

- 1750 hp (500-cfs pump)
- 4000 hp (1000-cfs pump)

IV-C-2-d-1-b. Pump Station Sizes.

- 1000-cfs (2, 500-cfs pumps)
- 3000-cfs (3, 1000-cfs pumps)
- 5000-cfs (5, 1000-cfs pumps)(This alternative dropped from study.)

IV-C-2-d-1-c. Number of Pumps/Stations. At least two, depending on electric utility requirements and maximum manufactured pump capacity; multiple pumps will have sequential start elevations incremented by 0.5-1.0 feet.

In any given alternative, use multiples of one size pump only; do not mix pumps of different capacities in a station to simplify pump O&M.

IV-C-2-d-2. Phase II. Furnish static H-Q pump curves for each alternative to ED-H for input to IFH: Screen PUMP, Figure 7.3, Page 119, Comment Head loss set to absolute minimum (0.10 feet); Pump START and STOP elevations by ED-H.

IV-C-2-d-3. Phase III. Obtain POR data that results from the IFH-CSA hydrologic analyses.

IV-C-2-d-4. Phase IV. Forecast annual pump operating costs using the POR data, motor models, and the rate schedule from the local electric utility, Entergy. (See input data in Appendix IV-C-G). A full year of pump operation data is given with POR summary and notes in Appendix IV-C-E.

IV-C-2-e. Fixed Costs. The up-front construction cost of utility service was obtained from Entergy. The plant demand was not high enough to warrant the use of a transmission line and substation. Instead, power will be supplied at 4160-V, 3-phase after being transformed from the 13.8-kV radial feed configuration of an Entergy distribution line extension (See Appendix IV-C-D for related correspondence). The costs of major electrical equipment were obtained from manufacturers or from cost estimating guides. The costs of pump motors were obtained from GE Motors.

IV-C-2-f. Annual Costs. The annual costs of operating the pumps were calculated using the pump operation data and Entergy"s rate schedule. (See pertinent correspondence in Appendix IV-C-E, and Period-of-Record - Metering and Billing Histories in Appendix IV-C-H).

IV-C-3. CANNON BREAK EXTENSION STRUCTURE. No electrical design was performed for this structure since electrical costs would not be significant.

IV-C-4. BAYOU METO WILDLIFE MANAGEMENT AREA (WMA) HINGED CREST GATES. No electrical design was performed for these structures since the electrical costs would be insignificant. Each hinged crest gate structure will have a hydraulic pump driven by a 20-hp motor with a motor starter and small panelboard. The local electric utility,

First Electric Co-operative Corporation, was contacted about furnishing permanent electric service to both Hinged Crest Gate structures (See Correspondence, Appendix IV-C-D, subject: First Electric - Hinged Crest Gate Structure).

## Part D - Civil Design

IV-D-1. GENERAL. The features considered included new grade control structures as well as modifications to existing grade control structures. The work shall be performed from one side of the waterway only.

IV-D-2. BOGGY SLOUGH WATER CONTROL STRUCTURE. This feature consists of a weir and a gated culvert for drawdown. The weir consists of riprap and sheet pile (PZ-22 Sheet Piles) with an 18-inch concrete cap extending from top bank to top bank of the stream, constructed at a control elevation of 179.0, NGVD. The upstream portion of the weir will consist of 18-inch (R200) riprap over nine inches of bedding material extending 25 feet upstream from the sheet pile at an elevation of 179.0, NGVD, and then transition to the existing thalweg of the stream at a slope of 1V to 3H. The downstream portion of the weir will consist of 36-inch (R650) riprap over nine inches of bedding material extending 25 feet downstream from the sheet pile at an elevation of 178.0, NGVD, and then transition to the existing thalweg of the stream at a slope of 1V to 12H. An erosion retardant key will be constructed at the upstream and downstream end of the weir. A bypass channel with 3-foot tall x 5-foot wide gated box culvert is to parallel the Boggy Slough Weir Structure. The channel/culvert invert is to be at an elevation of 173.0, NGVD, with 1V on 3H side slopes to existing ground at approximately Elevation 185.0, NGVD. Side slopes bottom and culvert embankment are to be armored with 12 inches of R90 riprap over engineering fabric. Plate IV-13 depicts the Boggy Slough Water Control Structure.

IV-D-3. BOGGY SLOUGH BYPASS. This feature contains three structures.

IV-D-3-a. Boggy Slough Diversion Channel Structure, Mile 0.1. This feature consists of a sheet pile weir (PZ-22 Sheet Piles) with an 18-inch concrete cap extending from top bank to top bank of the stream, constructed at a

control elevation of 173.0, NGVD. The upstream portion of the weir will consist of 18-inch (R200) riprap over nine inches of bedding material extending 25 feet upstream from the sheet pile at an elevation of 172.0, NGVD, and then transition to the existing thalweg of the stream at a slope of 1V to 4H. The downstream portion of the weir will consist of 36-inch (R650) riprap over nine inches of bedding material extending 25 feet downstream from the sheet pile at an elevation of 172.0, NGVD, and then transition to the existing thalweg of the stream at a slope of 1V to 12H. An erosion retardant key will be constructed at the upstream and downstream end of the weir. Plate IV-14 depicts the Boggy Slough Diversion Channel Structure, Mile 0.1.

IV-D-3-b. Boggy Slough Diversion Channel Structure, Mile 4.97. This feature consists of a sheet pile weir (PZ-22 Sheet Piles) with an 18-inch concrete cap extending from top bank to top bank of the stream, constructed at a control elevation of 176.0, NGVD. The upstream portion of the weir will consist of 18-inch (R200) riprap over nine inches of bedding material extending 25 feet upstream from the sheet pile at an elevation of 175.0, NGVD, and then transition to the existing thalweg of the stream at a slope of 1V to 4H. The downstream portion of the weir will consist of 36-inch (R650) riprap over nine inches of bedding material extending 25 feet downstream from the sheet pile at an elevation of 175.0, NGVD, and then transition to the existing thalweg of the stream at a slope of 1V to 12H. An erosion retardant key will be constructed at the upstream and downstream end of the weir. Plate IV-15 depicts the Boggy Slough Diversion Channel Structure, Mile 4.97.

IV-D-3-c. Castor Bayou Low Drop Grade Control Structure. This feature consists of a low drop grade control structure extending from top bank to top bank of the stream, constructed at a control elevation of 175.0, NGVD. The upstream portion of the weir will consist of 24-inch (R90) riprap over nine inches of bedding material extending 10 feet upstream from the centerline of the structure at an elevation of 175.0, NGVD. The downstream portion of the weir will consist of 36-inch (R650) riprap over nine inches of bedding material extending 18 feet from Elevation 175.0, NGVD, to Elevation 169.0, NGVD, at a slope of 1V to 3H; invert elevation of Elevation 169.0, NGVD, for a distance of 17 feet; transitioning to an elevation of 172.0, NGVD,

at a slope of 1V on 5H; and then extending 25 feet at Elevation 172.0, NGVD. An erosion retardant key will be constructed at the upstream and downstream end of the weir. Plate IV-16 depicts the Castor Bayou Low Drop Grade Control Structure.

IV-D-4. INDIAN BAYOU DITCH WEIR, MILE 58.3. This feature consists of a sheet pile weir (PZ-22 Sheet Piles) with an 18-inch concrete cap extending from top bank to top bank of the stream, constructed at a control elevation of 215.0, NGVD. The upstream portion of the weir will consist of 18-inch (R200) riprap over nine inches of bedding material extending 25 feet upstream from the sheet pile at an elevation of 214.0, NGVD, and then transition to the existing thalweg of the stream at a slope of 1V to 4H. The downstream portion of the weir will consist of 36-inch (R650) riprap over nine inches of bedding material extending 25 feet downstream from the sheet pile at an elevation of 214.0, NGVD, and then transition to the existing thalweg of the stream at a slope of 1V to 12H. An erosion retardant key will be constructed at the upstream and downstream end of the weir. Plate IV-17 depicts the Indian Bayou Weir, Mile 58.3.

IV-D-5. INDIAN BAYOU WEIR, MILE 16.4. This feature consists of a sheet pile weir (PZ-22 Sheet Piles) with an 18-inch concrete cap extending from top bank to top bank of the stream, constructed at a control elevation of 215.0, NGVD. The upstream portion of the weir will consist of 18-inch (R200) riprap over nine inches of bedding material extending 25 feet upstream from the sheet pile at an elevation of 214.0, NGVD, and then transition to the existing thalweg of the stream at a slope of 1V to 4H. The downstream portion of the weir will consist of 36-inch (R650) riprap over nine inches of bedding material extending 25 feet downstream from the sheet pile at an elevation of 214.0, NGVD, and then transition to the existing thalweg of the stream at a slope of 1V to 12H. An erosion retardant key will be constructed at the upstream and downstream end of the weir. Plate IV-18 depicts the Indian Bayou Weir, Mile 16.4.

IV-D-6. CROOKED CREEK WEIR MODIFICATIONS. This feature consists of removing an existing riprap weir at Mile 13.3 of Crooked Creek. The weir was constructed by placing riprap into the existing channel. The approximate average elevation is 189.0, NGVD. The riprap will be removed to

Elevation 182.0, NGVD, with a channel bottom width of 45 feet and 1V on 3H side slopes. Plate IV-19 depicts the Crooked Creek Weir Modifications.

IV-D-7. BIG BAYOU METO DIVERSION WEIRS. This feature consists of the construction of weirs at Mile 0.0 and Mile 2.5.

IV-D-7-a. Big Bayou Meto Diversion Channel Low Water Weir, Mile 0.0. This feature consists of a sheet pile weir (PZ-22 Sheet Piles) with an 18-inch concrete cap extending from top bank to top bank of the stream, constructed at a control elevation of 215.0, NGVD. The upstream portion of the weir will consist of 18-inch (R200) riprap over nine inches of bedding material extending 25 feet upstream from the sheet pile at an elevation of 214.0, NGVD, and then transitioning to the existing thalweg of the stream at a slope of 1V to 4H. The downstream portion of the weir will consist of 36-inch (R650) riprap over nine inches of bedding material extending 25 feet downstream from the sheet pile at an elevation of 214.0, NGVD, and then transition to the existing thalweg of the stream at a slope of 1V to 12H. An erosion retardant key will be constructed at the upstream and downstream end of the weir. Plate IV-20 depicts the Big Bayou Meto Diversion Channel Low Water Weir, Mile 0.0.

IV-D-7-b. Big Bayou Meto Diversion Channel Low Water Weir, Mile 2.5. This feature consists of a sheet pile weir (PZ-22 Sheet Piles) with an 18-inch concrete cap extending from top bank to top bank of the stream, constructed at a control elevation of 218.0, NGVD. The upstream portion of the weirs will consist of 18-inch (R200) riprap over nine inches of bedding material extending 25 feet upstream from the sheet pile at an elevation of 217.0, NGVD, and then transitioning to the existing thalweg of the stream at a slope of 1V to 4H. The downstream portion of the weir will consist of 36-inch (R650) riprap over nine inches of bedding material extending 25 feet downstream from the sheet pile at an elevation of 217.0, NGVD, and then transition to the existing thalweg of the stream at a slope of 1V to 12H. An erosion retardant key will be constructed at the upstream and downstream end of the weir. Plate IV-21 depicts the Big Bayou Meto Diversion Channel Low Water Weir, Mile 2.5.

[i] *Engineering and Design - Mechanical and Electrical Design of Pumping Stations*, EM 1110-2-3105 (Change 2), 30 November 1999 (change 2)

[ii] *Engineering and Design - General Principles Of Pumping Station Design And Layout*, EM 1110-2-3102, 28 February 1995

[iii] *Forecasting Operation Costs for Flood-Control Pumping Station Alternatives*,
Hank T. Braswell, P.E., USACE Electrical and Mechanical Conference, St. Louis, 1995

[iv] *HEC-IFH User's Manual*, Apr 92

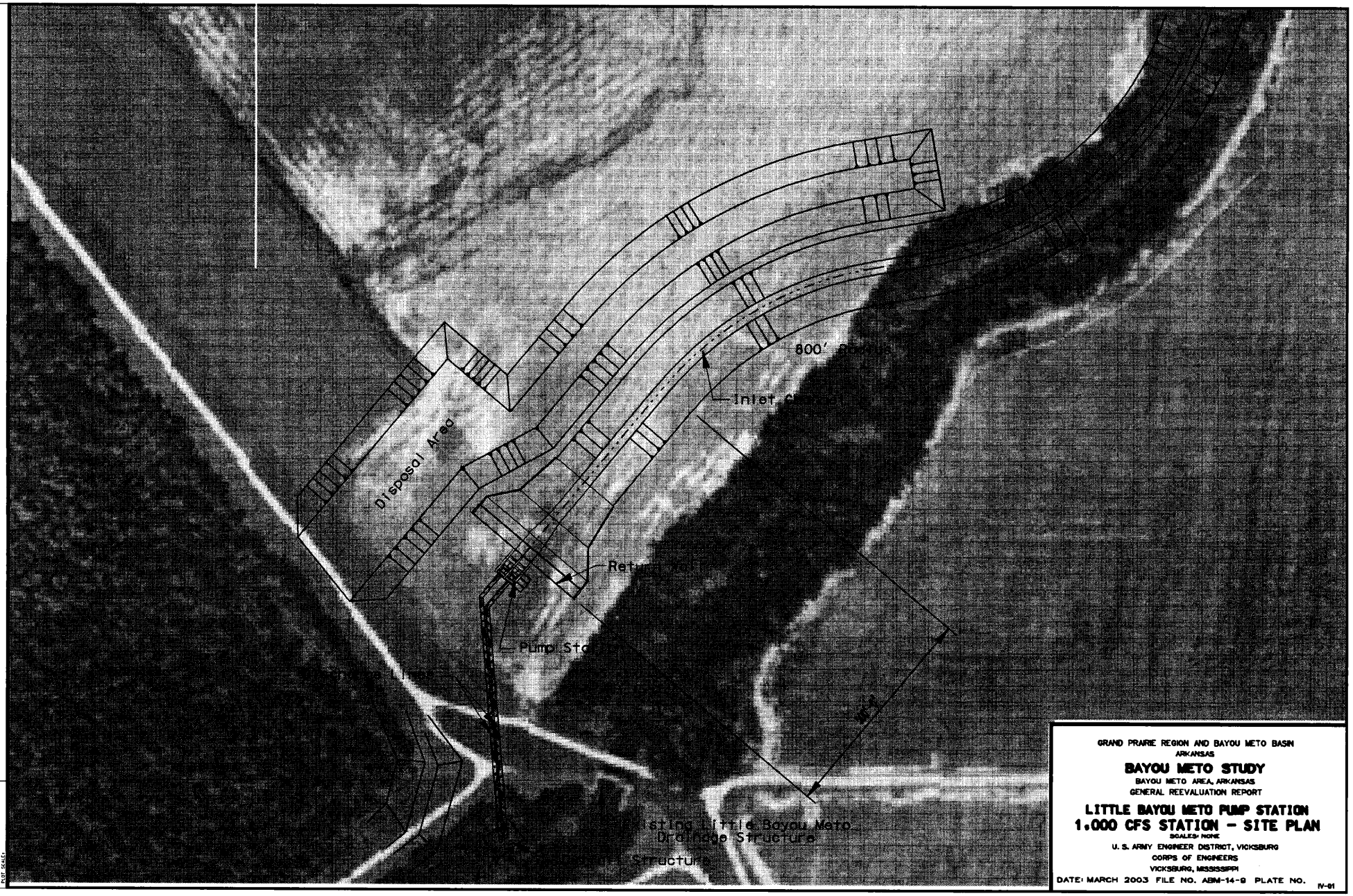


GRAND PRAIRIE REGION AND BAYOU METO BASIN
ARKANSAS

**BAYOU METO STUDY**

BAYOU METO AREA, ARKANSAS
GENERAL REEVALUATION REPORT

**LITTLE BAYOU METO PUMP STATION**
**1,000 CFS STATION - SITE PLAN**

SCALES: NONE

U. S. ARMY ENGINEER DISTRICT, VICKSBURG
CORPS OF ENGINEERS
VICKSBURG, MISSISSIPPI

DATE: MARCH 2003 FILE NO. ABM-14-9 PLATE NO. IV-01

USER IDENT. NO.
DESIGN FILENM
PLOT SCALE:

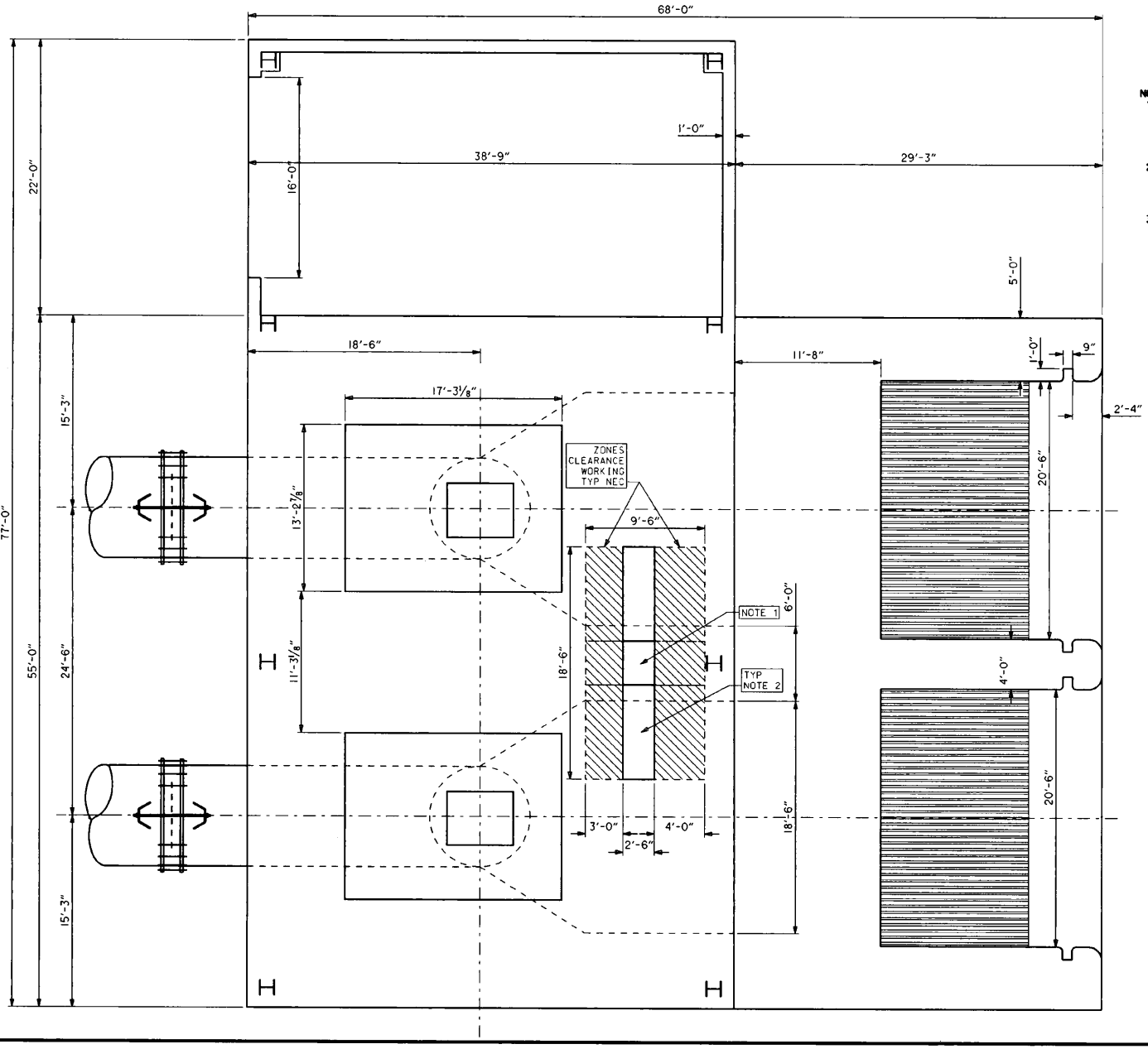


NOTES:

1. MAIN DISCONNECT SWITCH:
   5-KV DRAWOUT FUSED LOAD-BREAK SW
   90"H x 38"W x 30"D. 2000#. 1-HIGH
   ENCLOSURE. 600-A FUSED RATING (DE
   FOR NON-VENTED ENCLOSURE)

2. 5-KV MVC RVAT (TYP OF 2):
   90"H x 90"W x 30"D. 5000# 1-HIGH
   ENCLOSURE 400-A CONTACTORS 2800 K
   (DERATE 0.8 FOR NON-VENTED ENCLOS

3. IF REQ'D. MOUNT SWITCHGEAR ON CO
   TO ALLOW FULL DOOR SWING OVER SO
   ASSEMBLY.

GRAND PRARIE REGION AN
ARKANS

**BAYOU MET**

BAYOU METO ARE
GENERAL REEVALU

**LITTLE BAYOU METO**
**1,000 CFS STA**

SCALES: N

U. S. ARMY ENGINEER D
CORPS OF E
VICKSBURG, M

DATE: MARCH 2003 FILE NO.

D BASIN

TATION
LAN

URG

LATE NO. IV-02

USER IDENT. NO.
DESIGN FILENA
PLOT SCALE:

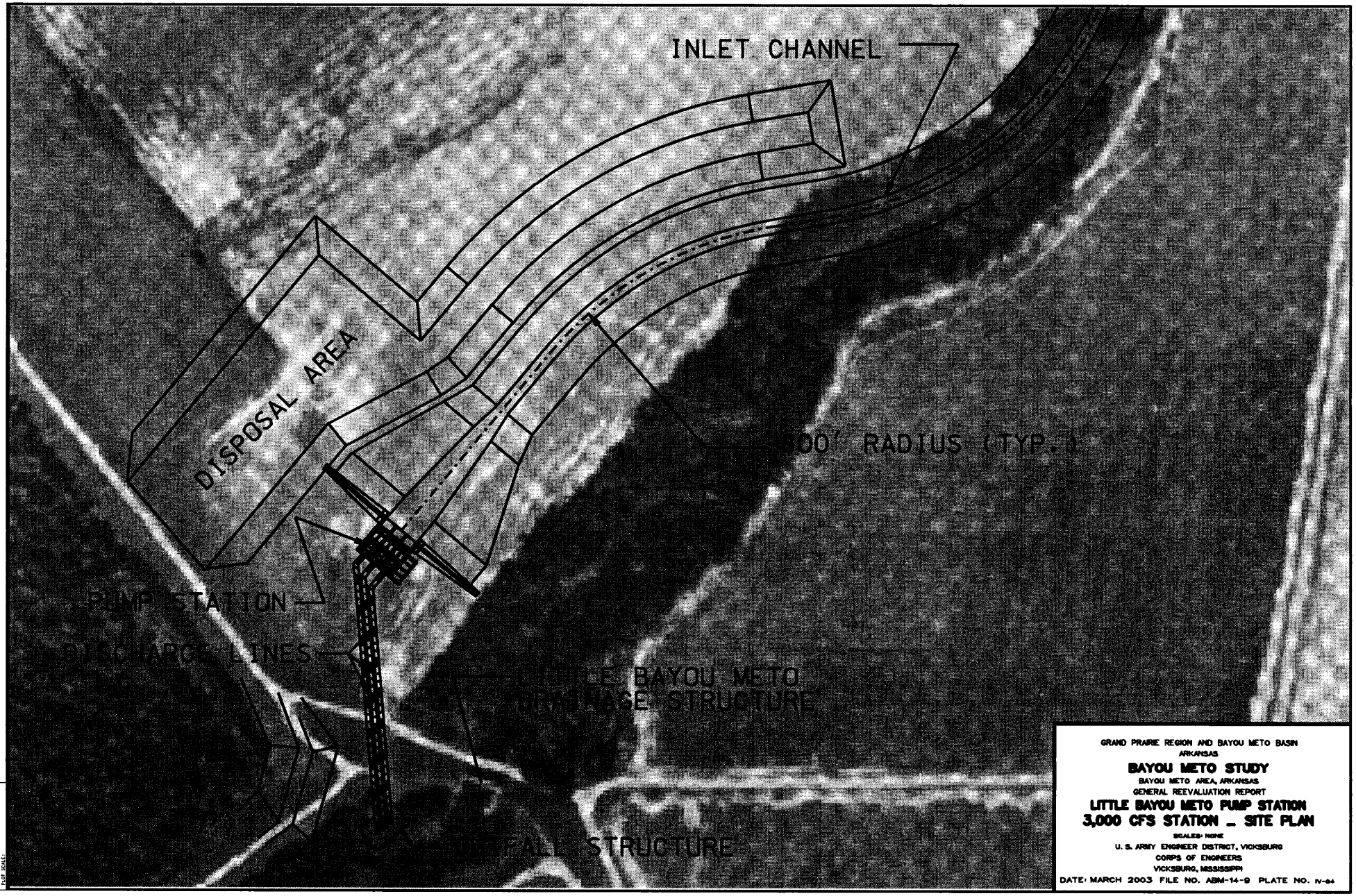


GRAND PRAIRIE REGION AND BAYOU METO BASIN
ARKANSAS

**BAYOU METO STUDY**

BAYOU METO AREA, ARKANSAS
GENERAL REEVALUATION REPORT

**LITTLE BAYOU METO PUMP STATION**
**3,000 CFS STATION _ SITE PLAN**

SCALES: NONE

U. S. ARMY ENGINEER DISTRICT, VICKSBURG
CORPS OF ENGINEERS
VICKSBURG, MISSISSIPPI

DATE: MARCH 2003 FILE NO. ABM-14-9 PLATE NO. IV-04

USER IDENT. NO.
DESIGN FILE NO.
PLOT SCALE

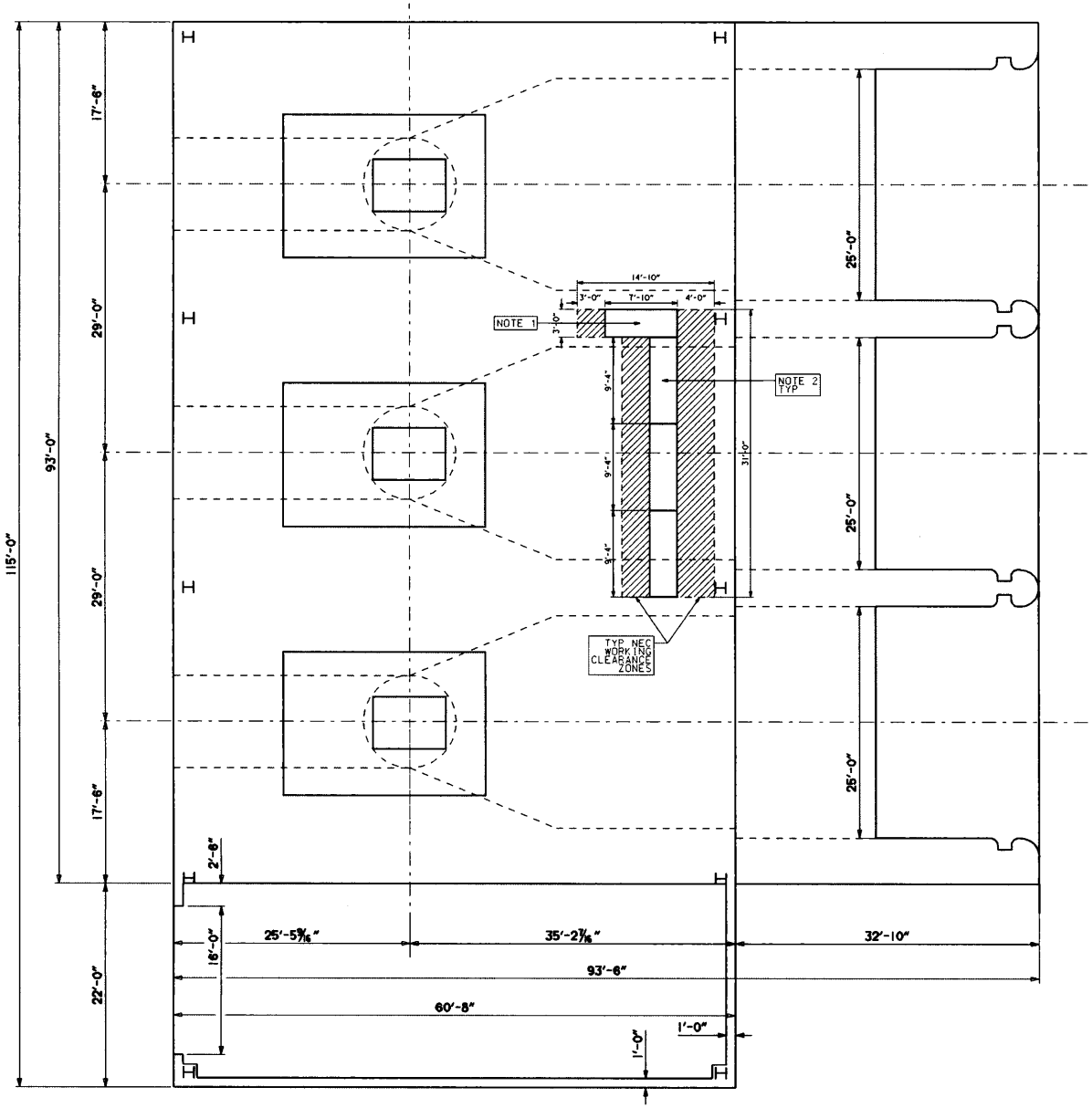


NOTES:

1. MAIN DISCONNECT SWITCH:
   5-KV 2000-A METAL-CLAD VACUUM BREAKER
   95"H x 36"W x 94"D, 4000#, 1-HIGH VENTED
   ENCLOSURE. TRANSITION SECTION NOT SHOWN.

2. 5-KV MVC RVAT (TYP OF 3):
   5600 HP MAX, 800-A CONTACTORS
   90"H x 112"W x 30"D, 5200#, 1-HIGH VENTED
   ENCLOSURE (DERATE 0.8 FOR NON-VENTED
   ENCLOSURES)

3. IF REQ'D, MOUNT SWITCHGEAR ON CONCRETE PAD
   TO ALLOW FULL DOOR SWING OVER SOLE PLATE
   ASSEMBLY.

GRAND PRAIRIE REGION AND BAYOU METO BASIN
ARKANSAS

**BAYOU METO STUDY**

BAYOU METO AREA, ARKANSAS
GENERAL REEVALUATION REPORT

**LITTLE BAYOU METO PUMP STATION**
**3,000 CFS STATION - PLAN**

SCALES: NONE
U. S. ARMY ENGINEER DISTRICT, VICKSBURG
CORPS OF ENGINEERS
VICKSBURG, MISSISSIPPI

DATE: MARCH 2003 FILE NO. ABM-14-9 PLATE NO. IV-05

USER IDENT. NO.
DESIGN FILE:XXX
PLOT SCALE:

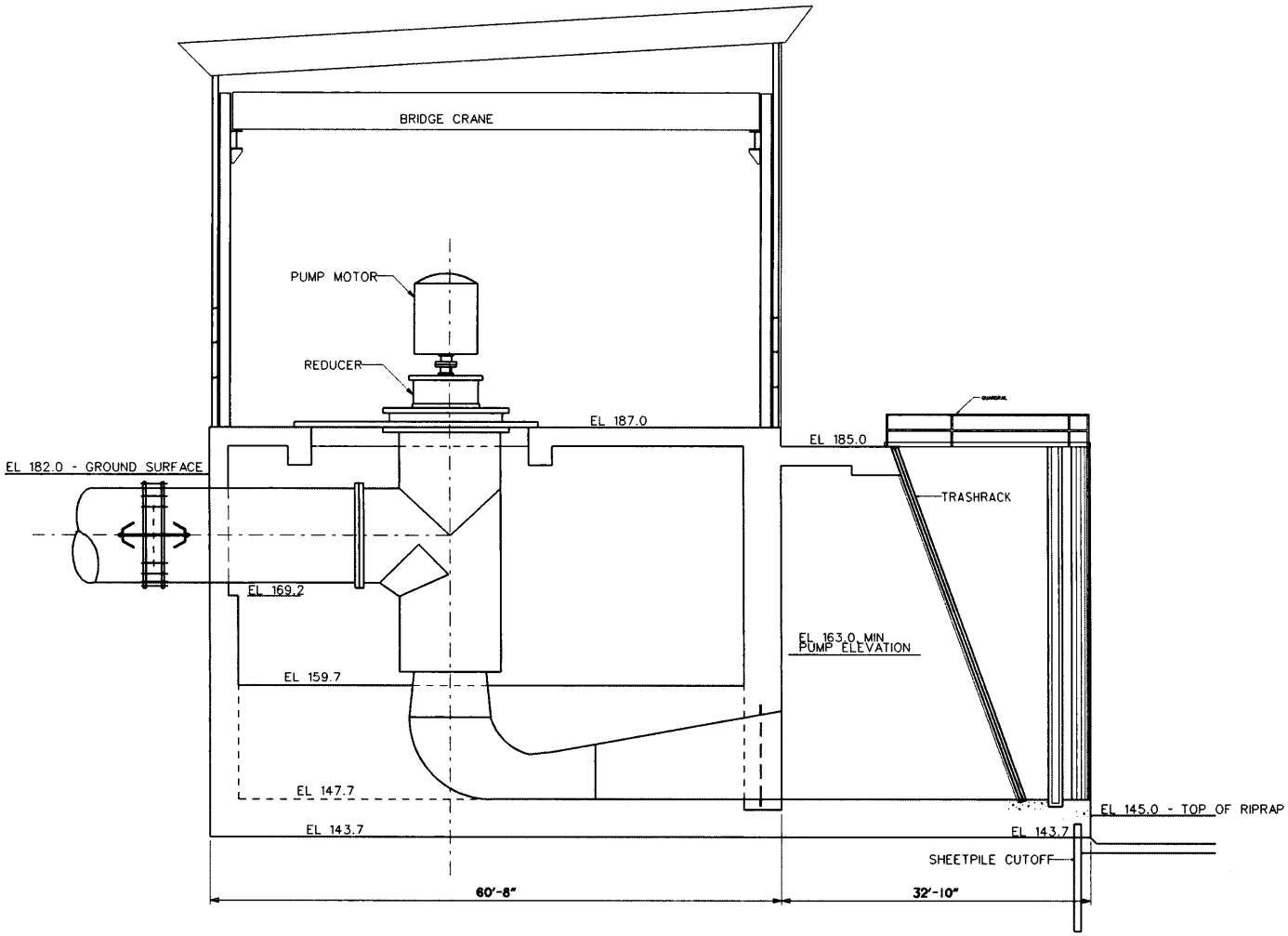


GRAND PRAIRIE REGION AND BAYOU METO BASIN
ARKANSAS

**BAYOU METO STUDY**

BAYOU METO AREA, ARKANSAS
GENERAL REEVALUATION REPORT

**LITTLE BAYOU METO PUMP STATION**
**3,000 CFS STATION - SECTION**

SCALES: NONE
U. S. ARMY ENGINEER DISTRICT, VICKSBURG
CORPS OF ENGINEERS
VICKSBURG, MISSISSIPPI
DATE: MARCH 2003 FILE NO. ABM-14-9 PLATE NO. IV-06

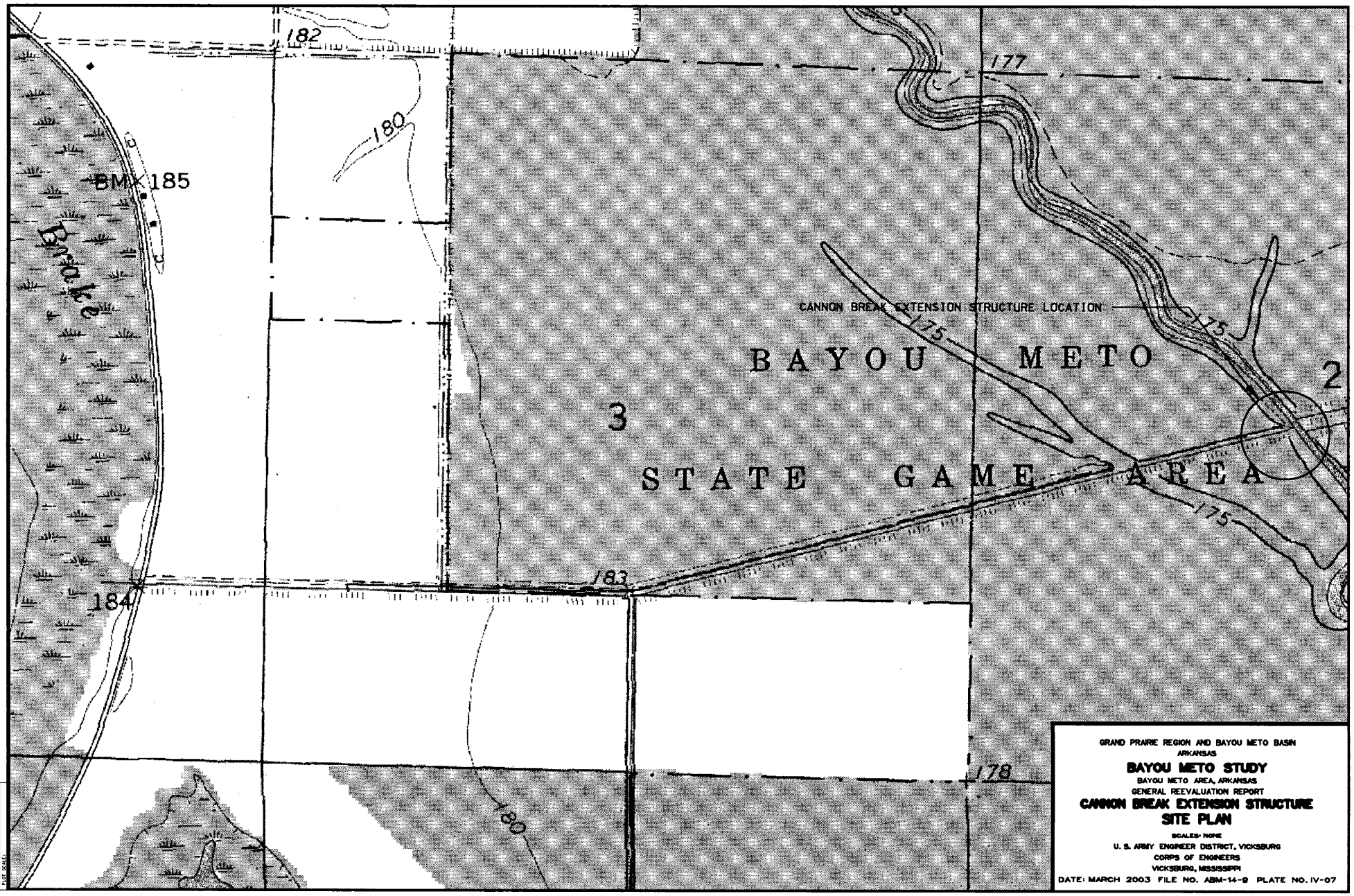


GRAND PRAIRIE REGION AND BAYOU METO BASIN
ARKANSAS

**BAYOU METO STUDY**

BAYOU METO AREA, ARKANSAS
GENERAL REEVALUATION REPORT

**CANNON BREAK EXTENSION STRUCTURE**
**SITE PLAN**

SCALES: NONE

U. S. ARMY ENGINEER DISTRICT, VICKSBURG
CORPS OF ENGINEERS
VICKSBURG, MISSISSIPPI

DATE: MARCH 2003 FILE NO. ABM-14-9 PLATE NO. IV-07

USER IDENT NO.
DESIGN FILE NO.
PLOT SCALE:

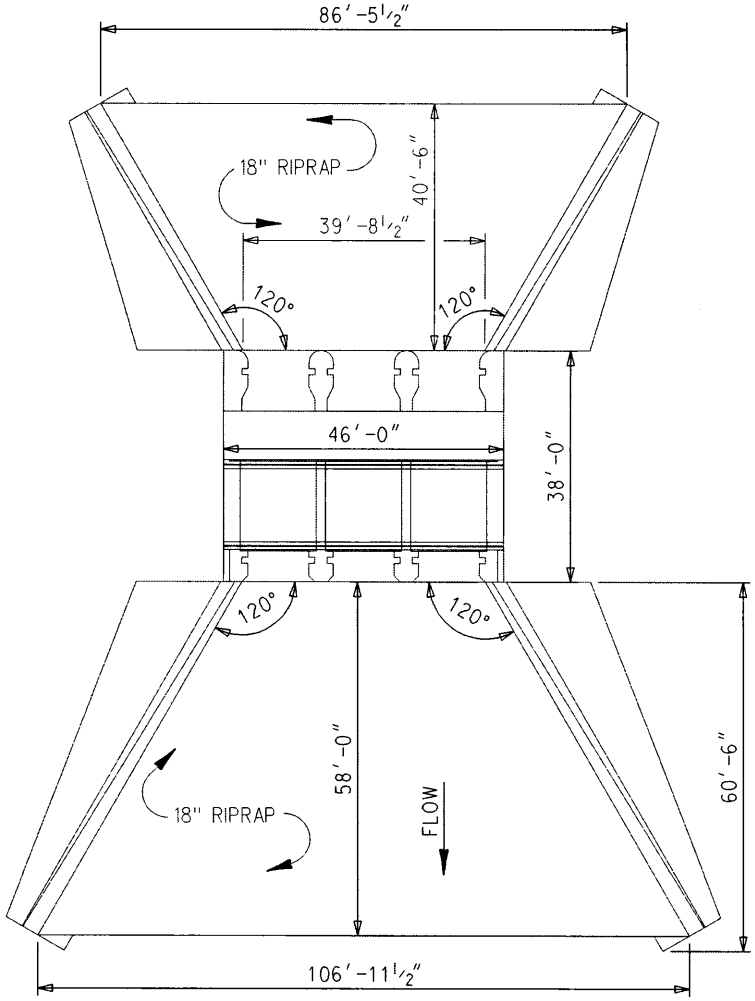


PLAN

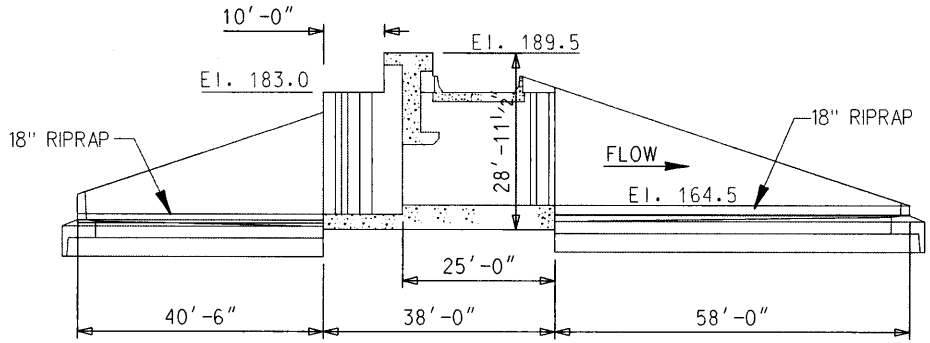


SECTION THROUGH CENTERLINE

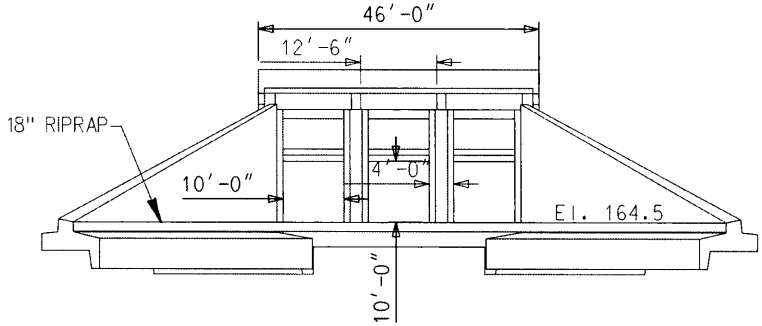


DOWNSTREAM ELEVATION

GRAND PRAIRIE REGION AND BAYOU METO BASIN
ARKANSAS

**BAYOU METO STUDY**

BAYOU METO AREA, ARKANSAS
GENERAL REEVALUATION REPORT

**CANNON BREAK EXTENSION STRUCTURE**
**1,000 CFS ALTERNATIVE**

SCALES: NONE

U. S. ARMY ENGINEER DISTRICT, VICKSBURG
CORPS OF ENGINEERS
VICKSBURG, MISSISSIPPI

DATE: MARCH 2003 FILE NO. ABM-14-9 PLATE NO. IV-08

USER INPUT NO.
DESIGN FILENO.
PLOT SCALE:

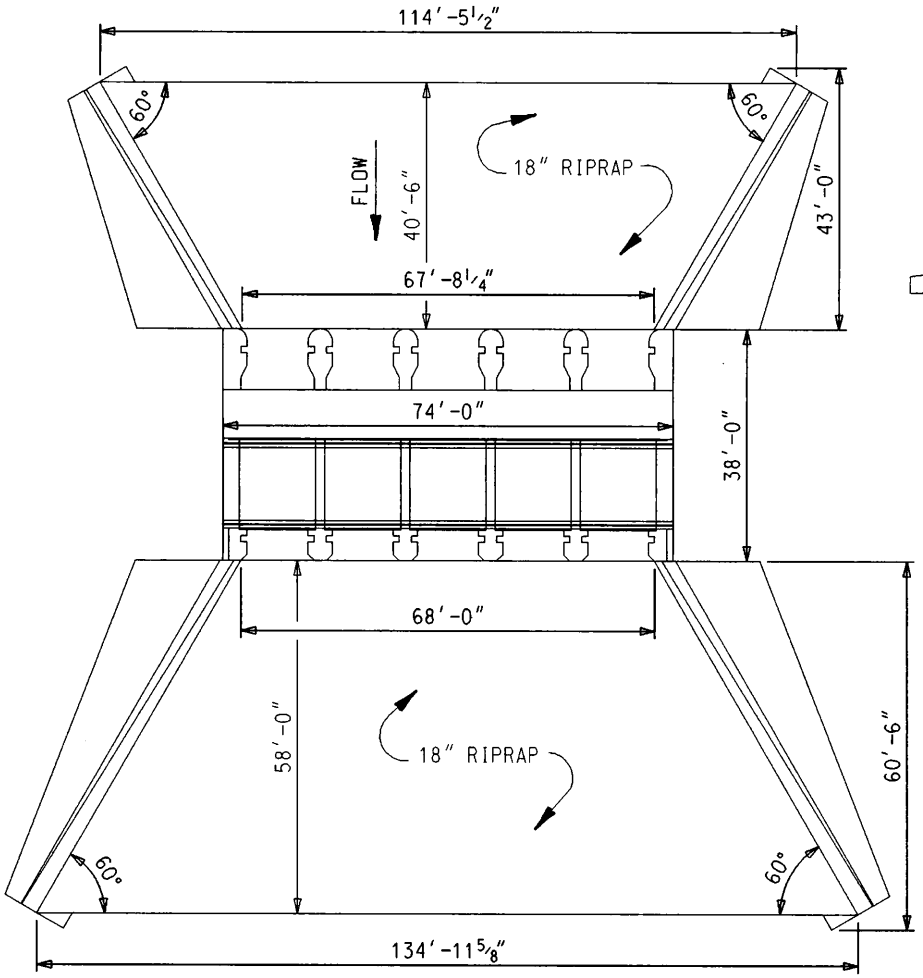


PLAN

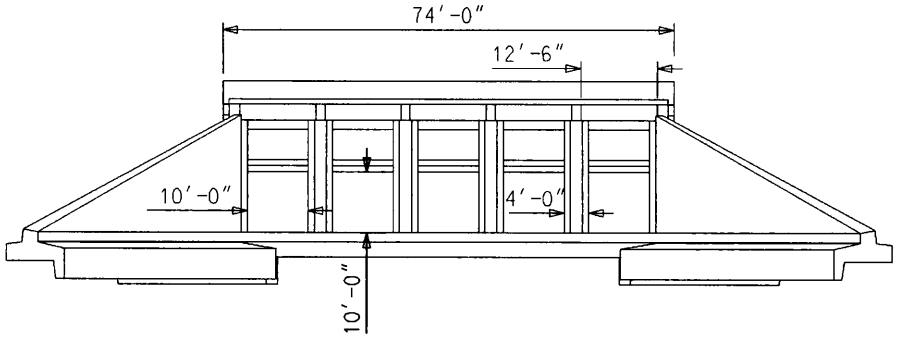


DOWNSTREAM ELEVATION

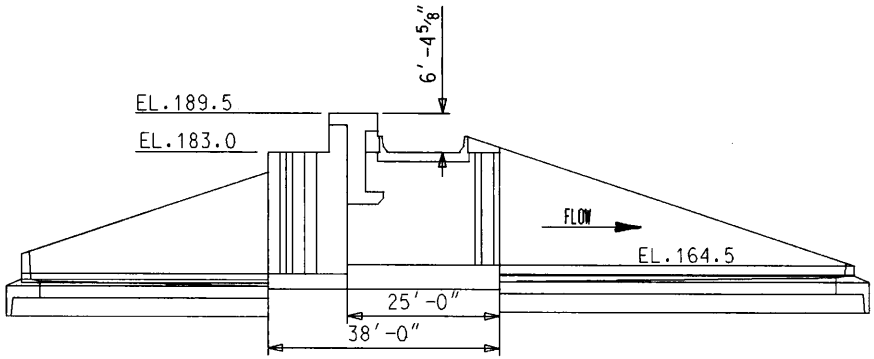


SECTION THROUGH CENTERLINE

GRAND PRAIRIE REGION AND BAYOU METO BASIN
ARKANSAS

**BAYOU METO STUDY**

BAYOU METO AREA, ARKANSAS
GENERAL REEVALUATION REPORT

**GROSS BREAK EXTENSION STRUCTURE**
**3,000 CFS ALTERNATIVE**

SCALED NONE

U. S. ARMY ENGINEER DISTRICT, VICKSBURG
CORPS OF ENGINEERS
VICKSBURG, MISSISSIPPI

DATE: MARCH 2003 FILE NO. AEM-14-2 PLATE NO. IV-62

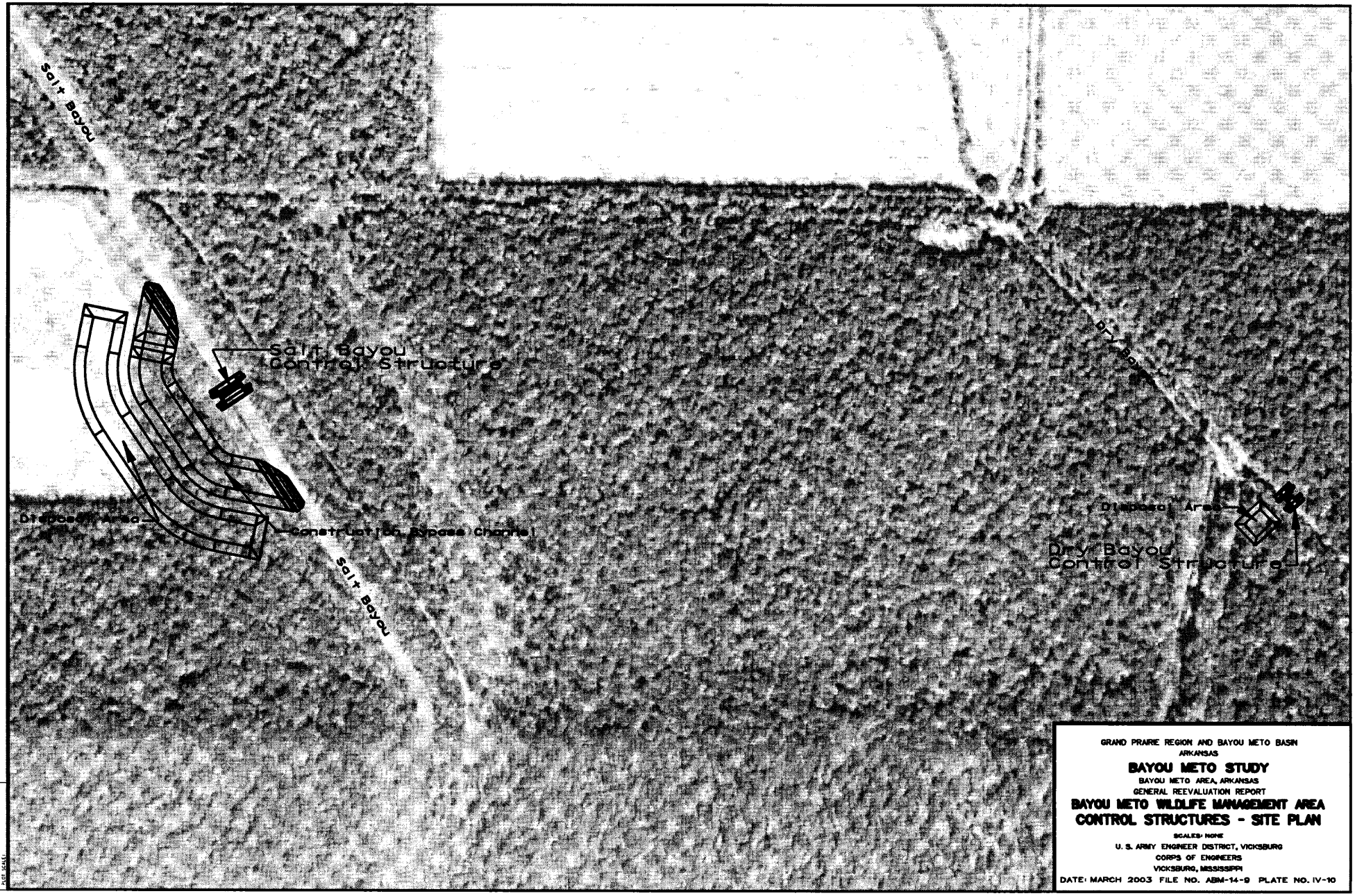


GRAND PRAIRIE REGION AND BAYOU METO BASIN
ARKANSAS

**BAYOU METO STUDY**

BAYOU METO AREA, ARKANSAS
GENERAL REEVALUATION REPORT

**BAYOU METO WILDLIFE MANAGEMENT AREA**
**CONTROL STRUCTURES - SITE PLAN**

SCALES: NONE
U. S. ARMY ENGINEER DISTRICT, VICKSBURG
CORPS OF ENGINEERS
VICKSBURG, MISSISSIPPI
DATE: MARCH 2003 FILE NO. ABM-14-9 PLATE NO. IV-10

USER IDENT. NO.
DESIGN FILE:XXX
PLOT SCALE:

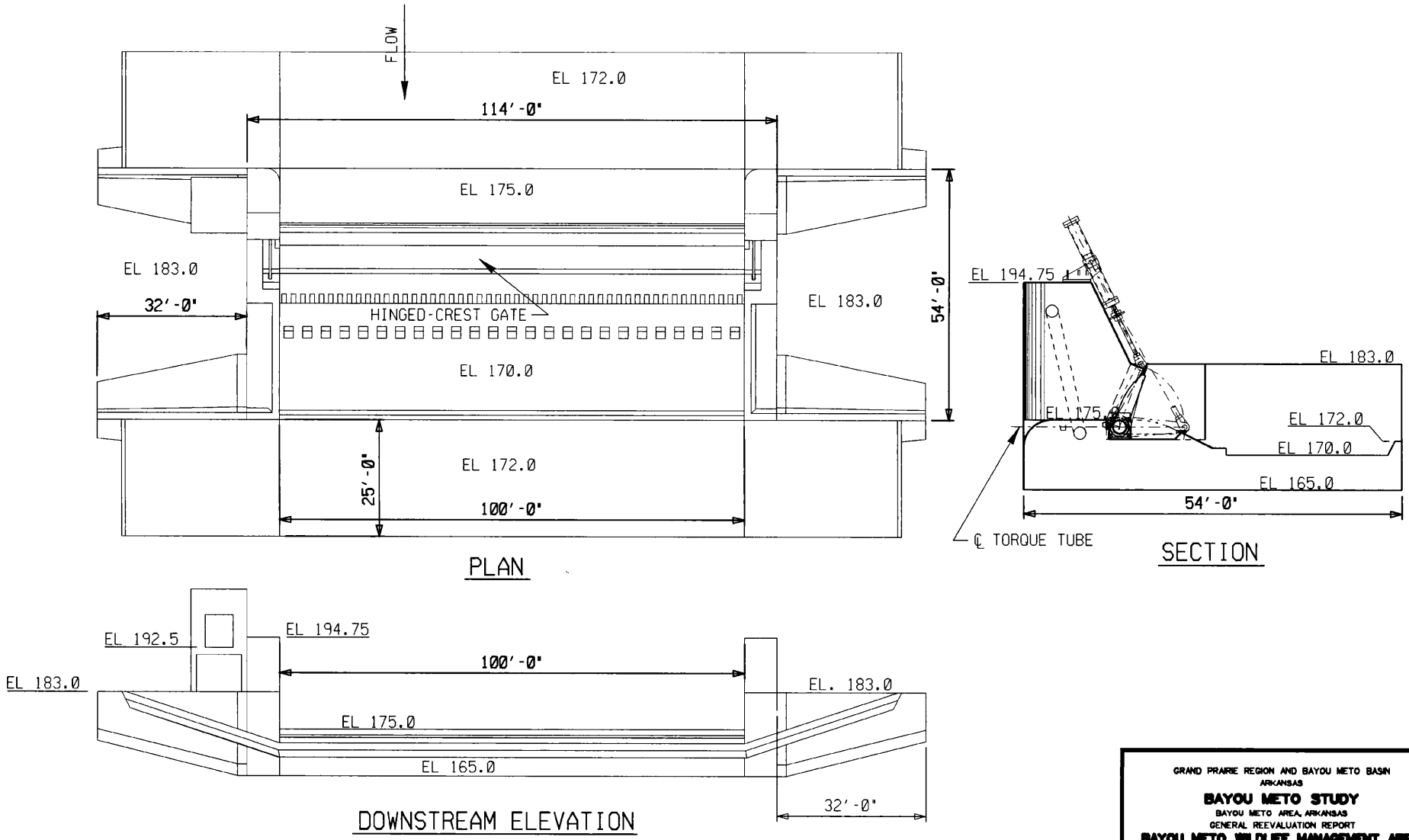


GRAND PRAIRIE REGION AND BAYOU METO BASIN
ARKANSAS

**BAYOU METO STUDY**

BAYOU METO AREA, ARKANSAS
GENERAL REEVALUATION REPORT

**BAYOU METO WILDLIFE MANAGEMENT AREA**
**SALT BAYOU CONTROL STRUCTURE**

SCALES: NONE
U. S. ARMY ENGINEER DISTRICT, VICKSBURG
CORPS OF ENGINEERS
VICKSBURG, MISSISSIPPI
DATE: MARCH 2003 FILE NO. ABM-14-9 PLATE NO. IV-11

USER IDENT. NO.
DESIGN FILE:xxx
PLOT SCALE:

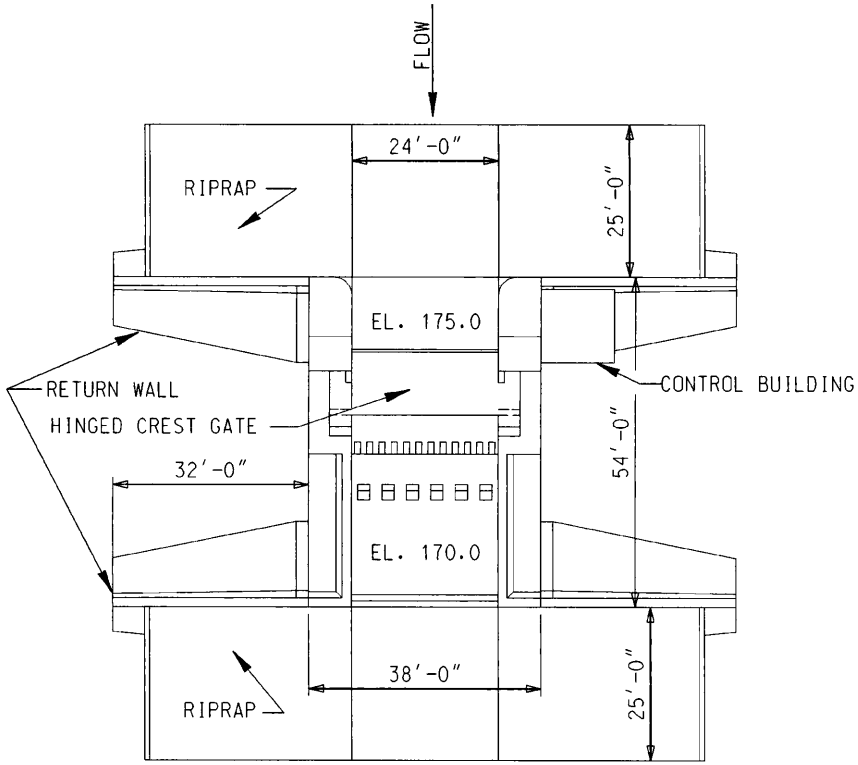


PLAN

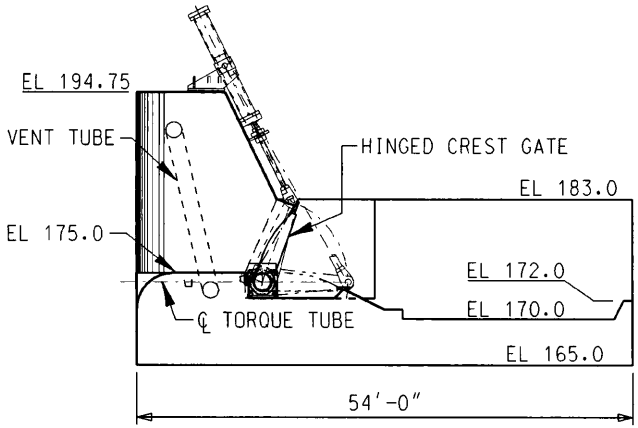


SECTION

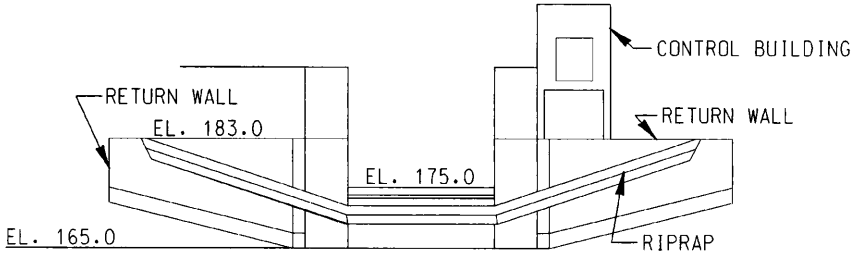


DOWNSTREAM ELEVATION

GRAND PRAIRIE REGION AND BAYOU METO BASIN
ARKANSAS

**BAYOU METO STUDY**

BAYOU METO AREA, ARKANSAS
GENERAL REEVALUATION REPORT

**BAYOU METO WILDLIFE MANAGEMENT AREA**
**DRY BAYOU CONTROL STRUCTURE**

SCALES: NONE
U. S. ARMY ENGINEER DISTRICT, VICKSBURG
CORPS OF ENGINEERS
VICKSBURG, MISSISSIPPI
DATE: MARCH 2003 FILE NO. ABM-14-9 PLATE NO. IV-12

USER INDEX. NO.
DESIGN FILENAME
PLOT SCALE

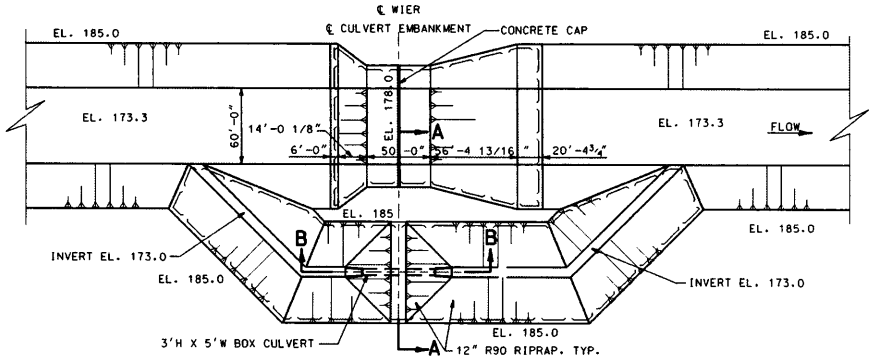


PLAN

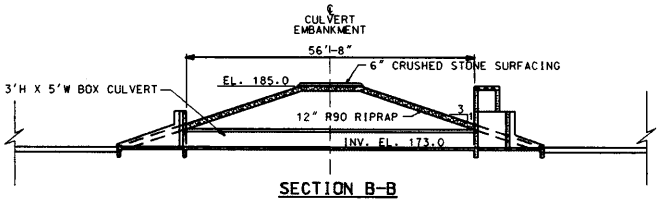


SECTION B-B

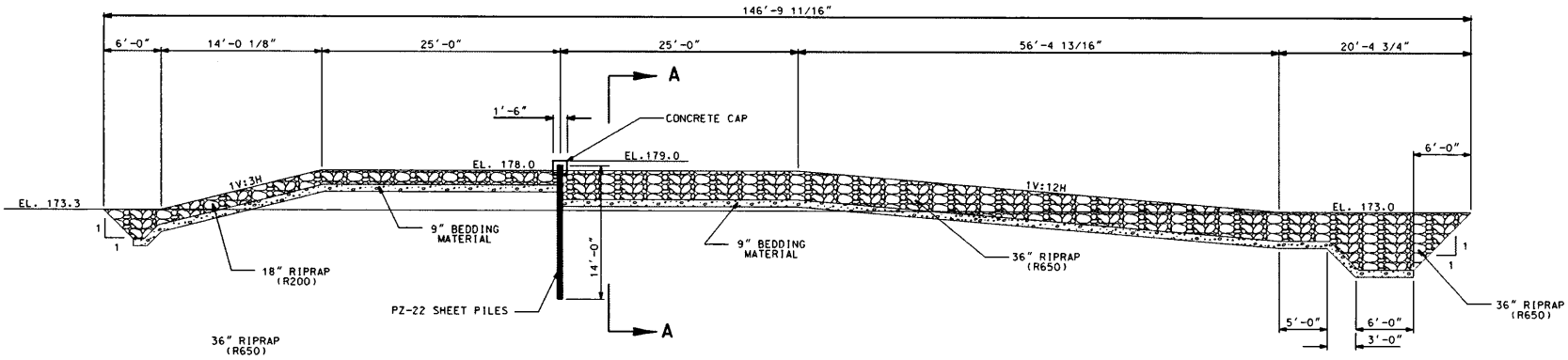


PROFILE OF WEIR

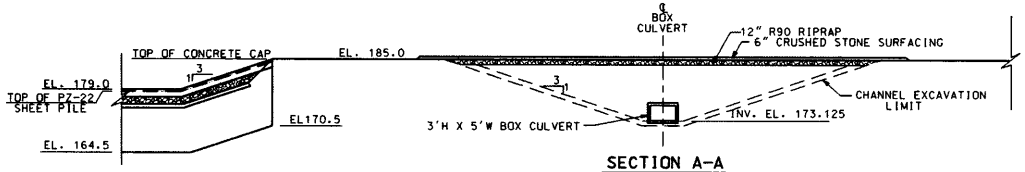


SECTION A-A

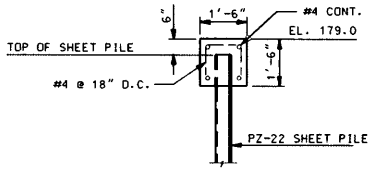


CONCRETE CAP DETAIL

GRAND PRAIRIE REGION AND BAYOU METO BASIN
ARKANSAS

**BAYOU METO STUDY**

BAYOU METO AREA, ARKANSAS
GENERAL REEVALUATION REPORT

**BOGGY SLOUGH CHANNEL**
**WATER CONTROL STRUCTURE**

SCALES: NONE

U. S. ARMY ENGINEER DISTRICT, VICKSBURG
CORPS OF ENGINEERS
VICKSBURG, MISSISSIPPI

DATE: MARCH 2003 FILE NO. ABM-14-9 PLATE NO. IV-13

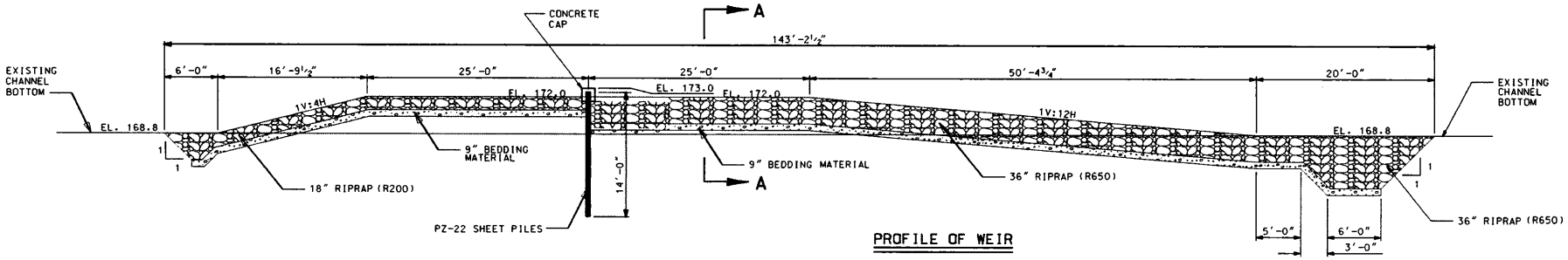


PROFILE OF WEIR

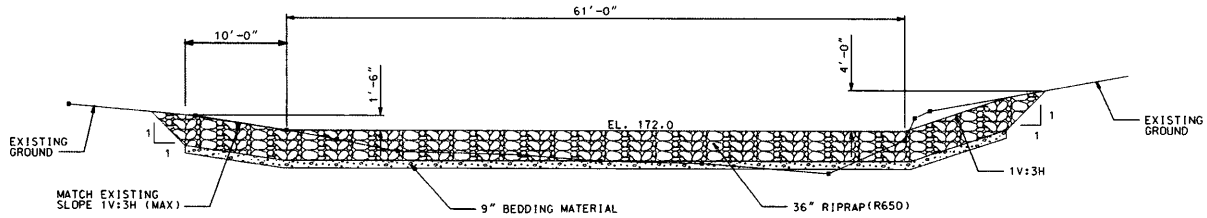


SECTION A-A

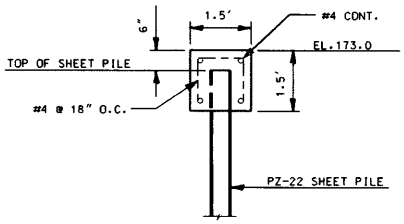


CONCRETE CAP DETAIL

GRAND PRAIRIE REGION AND BAYOU METO BASIN
ARKANSAS

**BAYOU METO STUDY**

BAYOU METO AREA, ARKANSAS
GENERAL REEVALUATION REPORT

**BOGGY SLOUGH DIVERSION CHANNEL**
**WEIR @ MILE 0.1**

SCALES: NONE
U. S. ARMY ENGINEER DISTRICT, VICKSBURG
CORPS OF ENGINEERS
VICKSBURG, MISSISSIPPI
DATE: MARCH 2003 FILE NO. ABM-14-9 PLATE NO. IV-14

USER IDENT. NO.
DESIGN FILENA.
PLOT SCALE:

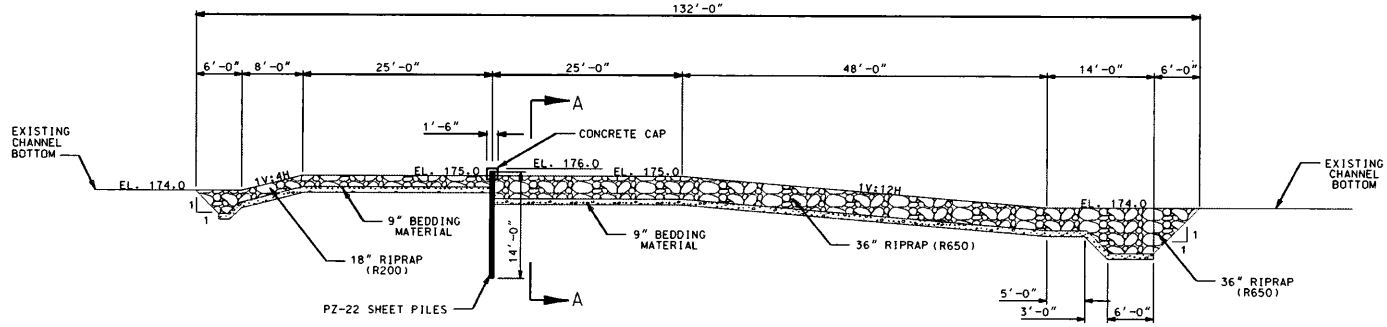


PROFILE OF WEIR

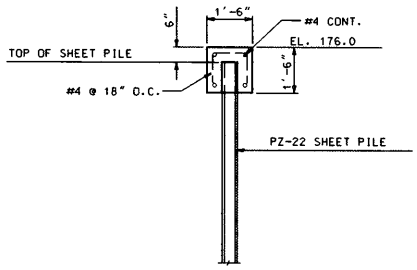


CONCRETE CAP DETAIL

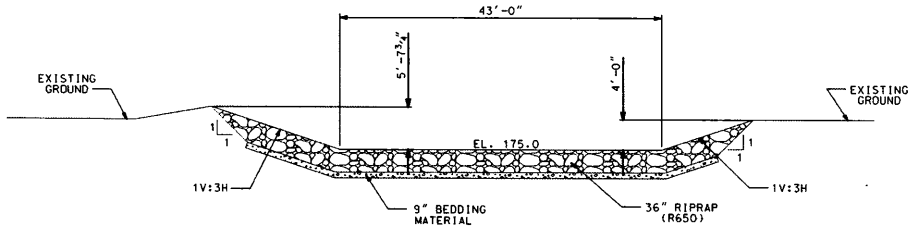


SECTION A-A

GRAND PRAIRIE REGION AND BAYOU METO BASIN
ARKANSAS

**BAYOU METO STUDY**

BAYOU METO AREA, ARKANSAS
GENERAL REEVALUATION REPORT

**BOGGY SLOUGH DIVERSION CHANNEL**
**WEIR @ MILE 4.97**

SCALES: NONE

U. S. ARMY ENGINEER DISTRICT, VICKSBURG
CORPS OF ENGINEERS
VICKSBURG, MISSISSIPPI

DATE: MARCH 2003 FILE NO. ABM-14-9 PLATE NO. IV-15

USER INPUT NO.
DESIGN FILE NO.
PLOT SCALE:

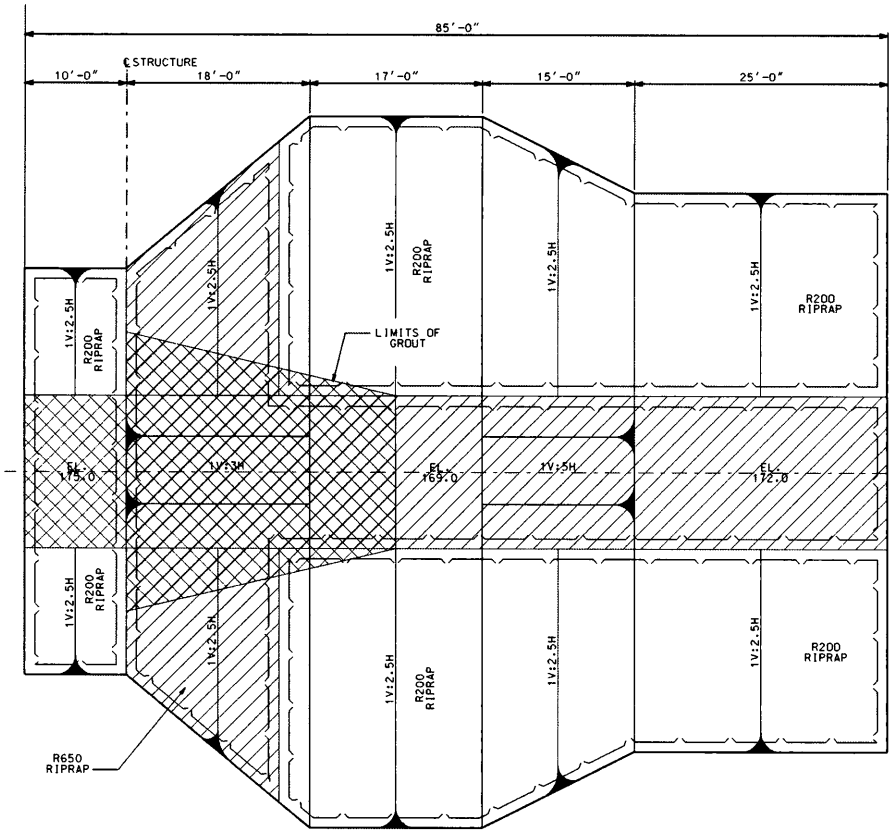


SITE PLAN

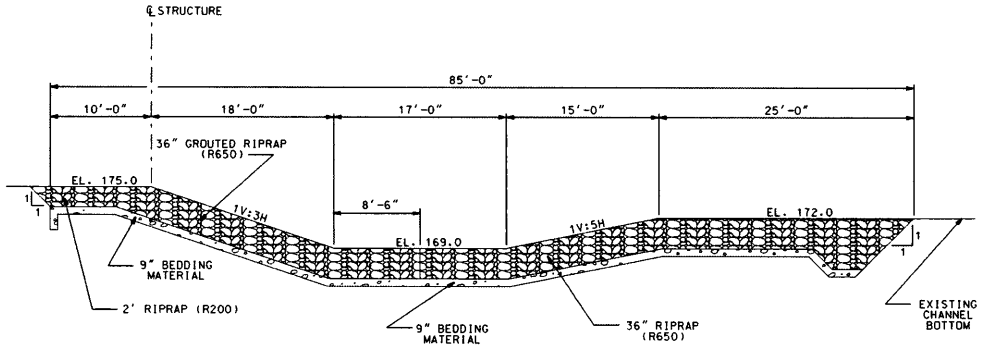


PROFILE ALONG STRUCTURE CENTER LINE

GRAND PRAIRIE REGION AND BAYOU METO BASIN
ARKANSAS

**BAYOU METO STUDY**

BAYOU METO AREA, ARKANSAS
GENERAL REEVALUATION REPORT

**CASTOR BAYOU**
**LOW DROP GRADE CONTROL STRUCTURE**

SCALES: NONE
U. S. ARMY ENGINEER DISTRICT, VICKSBURG
CORPS OF ENGINEERS
VICKSBURG, MISSISSIPPI
DATE: MARCH 2003 FILE NO. ABM-14-9 PLATE NO. IV-16

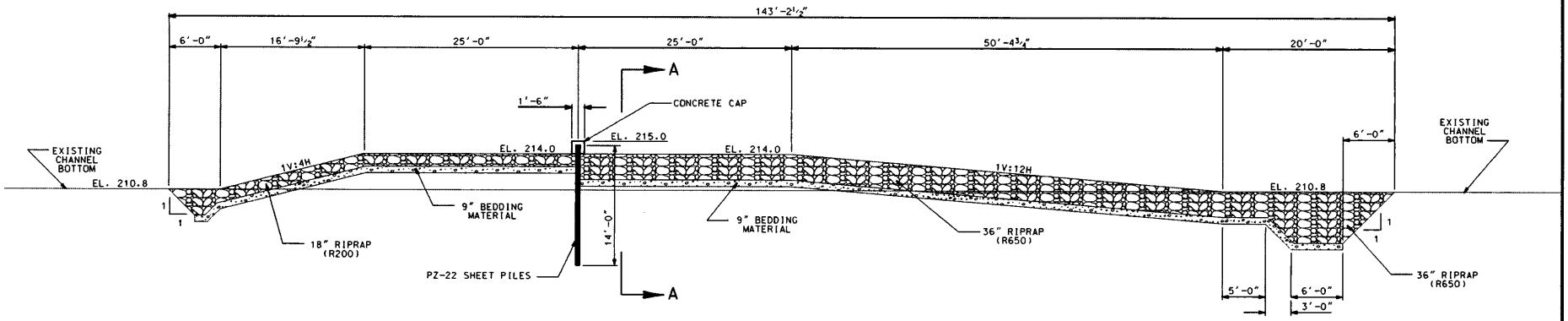


PROFILE OF WEIR

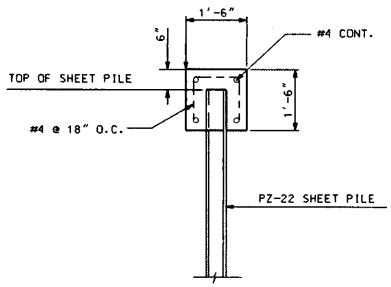


CONCRETE CAP DETAIL

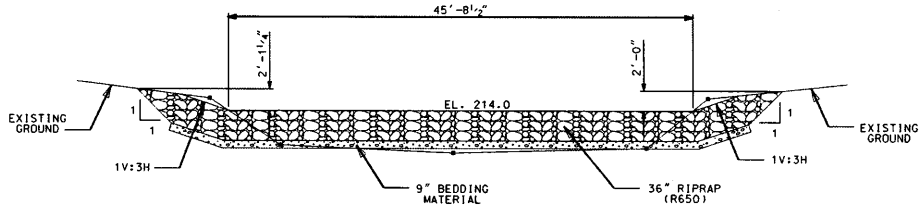


SECTION A-A

GRAND PRAIRIE REGION AND BAYOU METO BASIN
ARKANSAS

**BAYOU METO STUDY**

BAYOU METO AREA, ARKANSAS
GENERAL REEVALUATION REPORT

**INDIAN BAYOU DITCH**
**WEIR @ MILE 58.3**

SCALES: NONE

U. S. ARMY ENGINEER DISTRICT, VICKSBURG
CORPS OF ENGINEERS
VICKSBURG, MISSISSIPPI

DATE: MARCH 2003 FILE NO. ABM-14-9 PLATE NO. IV-17

USER INDEX NO.
DESIGN FILE NO.
PLOT SCALE:

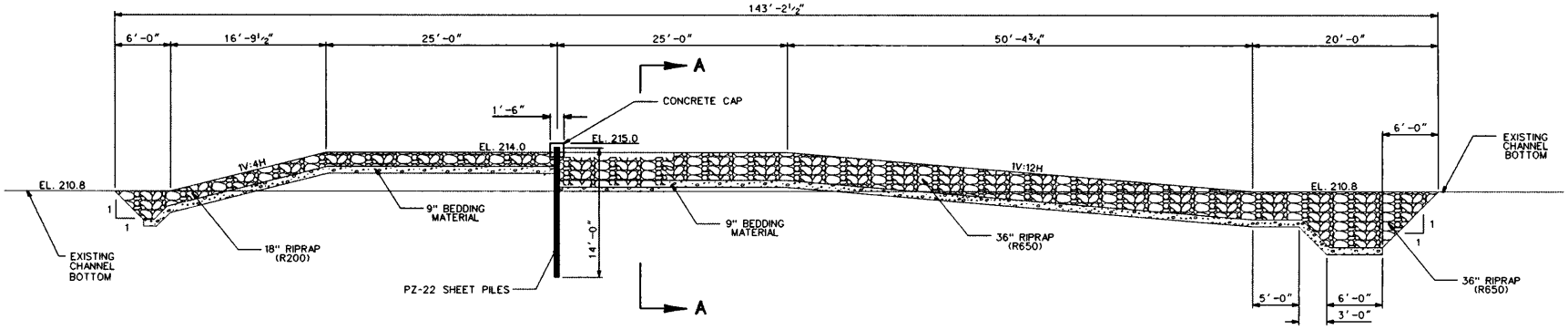


PROFILE OF WEIR

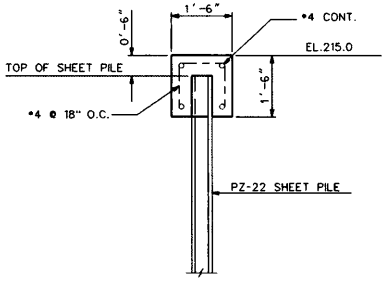


CONCRETE CAP DETAIL

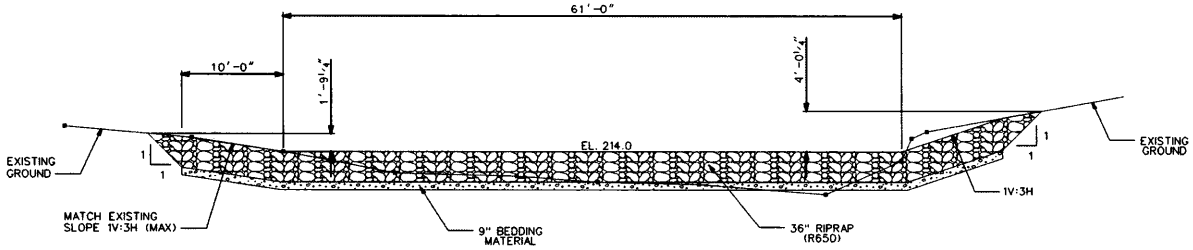


SECTION A-A

GRAND PRAIRIE REGION AND BAYOU METO BASIN
ARKANSAS

**BAYOU METO STUDY**

BAYOU METO AREA, ARKANSAS
GENERAL REEVALUATION REPORT

**INDIAN BAYOU**
**WEIR @ MILE 16.4**

SCALES: NONE
U. S. ARMY ENGINEER DISTRICT, VICKSBURG
CORPS OF ENGINEERS
VICKSBURG, MISSISSIPPI
DATE: MARCH 2003 FILE NO. ABM-14-9 PLATE NO. IV-16

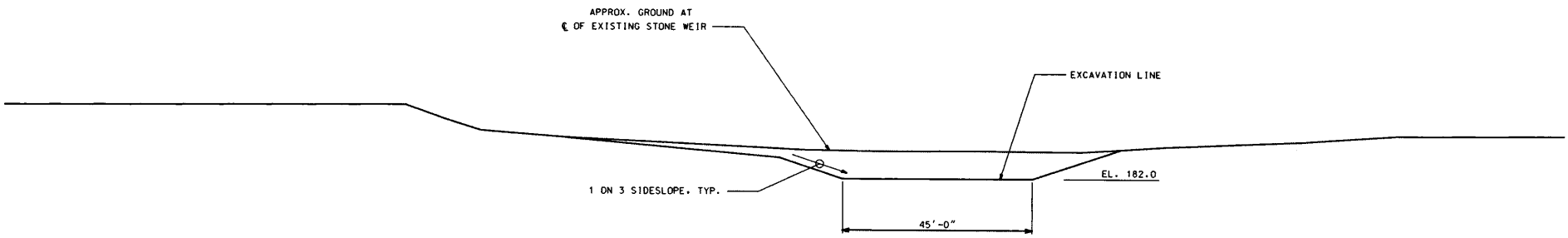


SECTION A

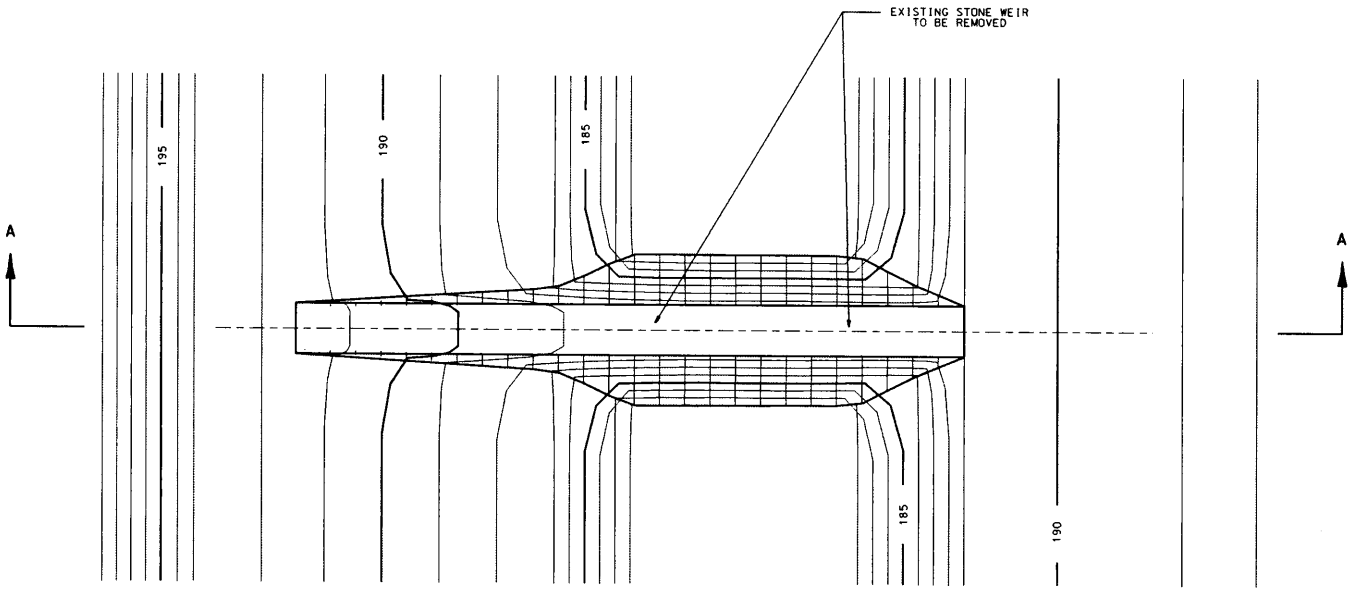


PLAN

GRAND PRAIRIE REGION AND BAYOU METO BASIN
ARKANSAS

**BAYOU METO STUDY**

BAYOU METO AREA, ARKANSAS
GENERAL REEVALUATION REPORT

**CROOKED CREEK**
**WEIR MODIFICATION**

SCALES: NONE

U. S. ARMY ENGINEER DISTRICT, VICKSBURG
CORPS OF ENGINEERS
VICKSBURG, MISSISSIPPI

DATE: MARCH 2003 FILE NO. ABM-14-9 PLATE NO. IV-19

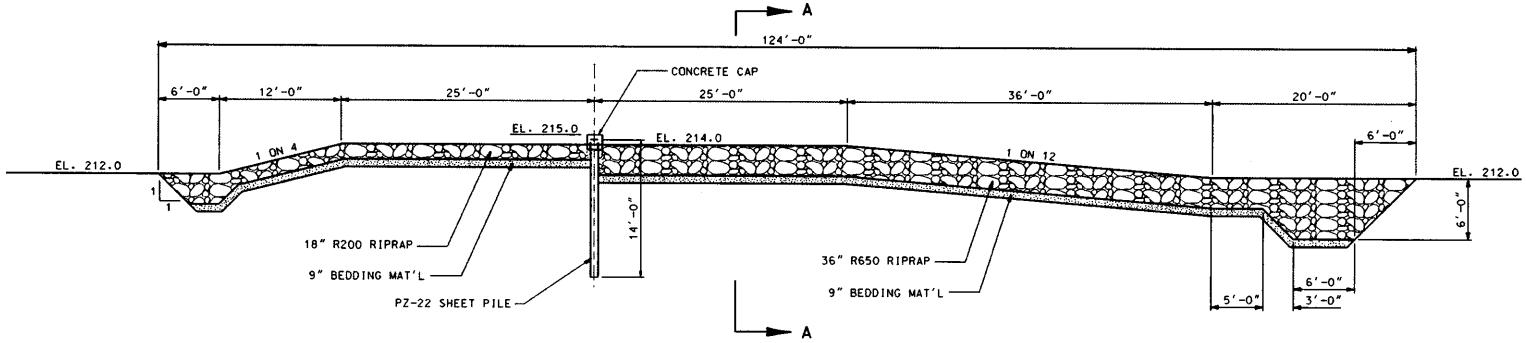


PROFILE

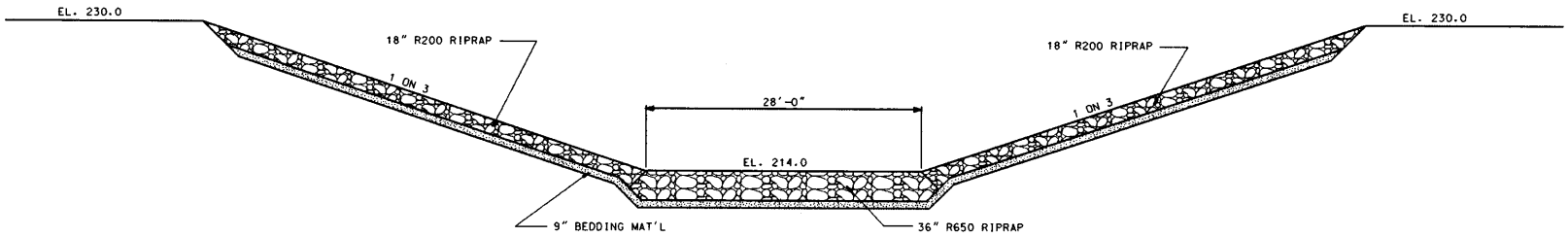


SECTION A

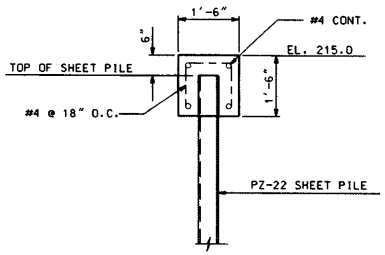


CONCRETE CAP DETAIL

GRAND PRARIE REGION AND BAYOU METO BASIN
ARKANSAS

**BAYOU METO STUDY**

BAYOU METO AREA, ARKANSAS
GENERAL REEVALUATION REPORT

**BIG BAYOU METO DIVERSION CHANNEL**
**LOW WATER WEIR @ MILE 0.0**

SCALES: NONE

U. S. ARMY ENGINEER DISTRICT, VICKSBURG
CORPS OF ENGINEERS
VICKSBURG, MISSISSIPPI

DATE: MARCH 2003 FILE NO. ABM-14-9 PLATE NO. IV-20

USER INDEX NO.
DESIGN FILENAME
PLOT SCALE

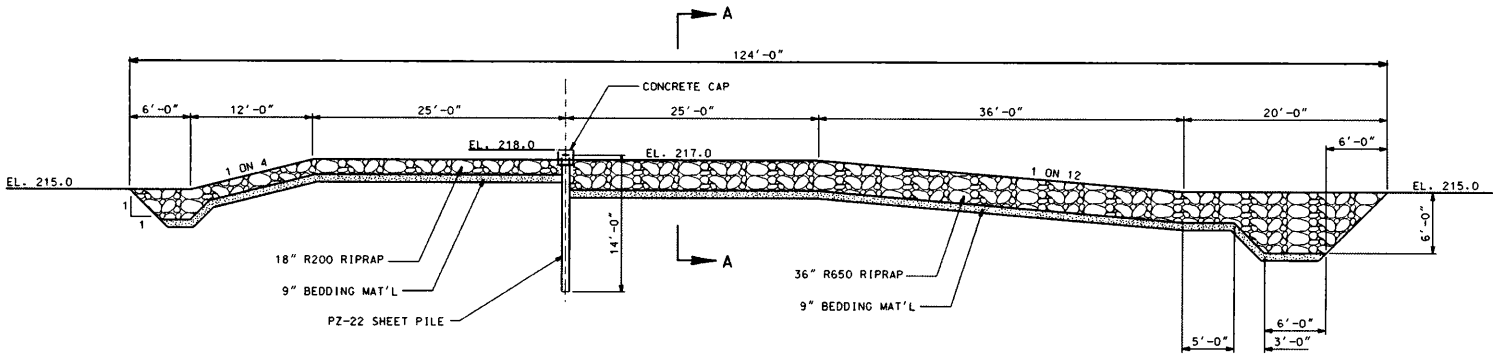


PROFILE

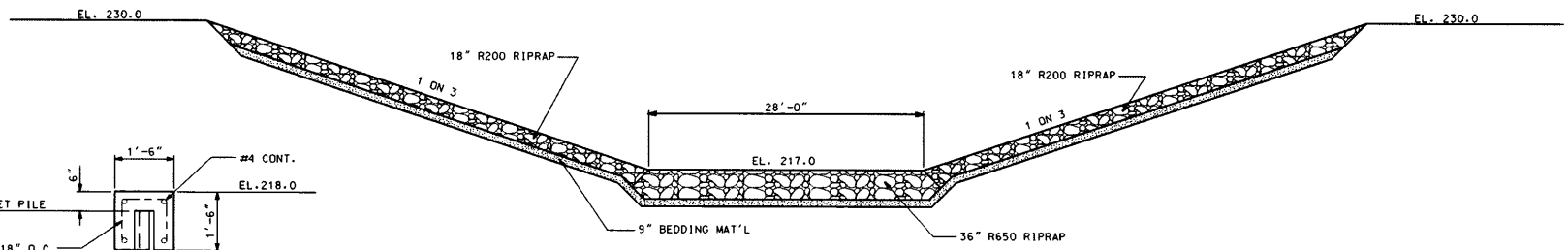


SECTION A

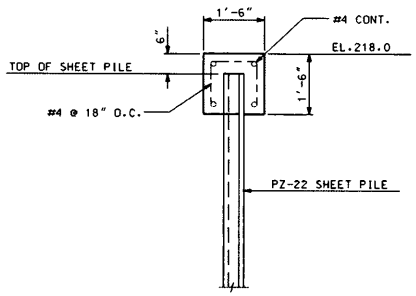


CONCRETE CAP DETAIL

GRAND PRAIRIE REGION AND BAYOU METO BASIN
ARKANSAS

**BAYOU METO STUDY**

BAYOU METO AREA, ARKANSAS
GENERAL REEVALUATION REPORT

**BIG BAYOU METO DIVERSION CANNEL**
**LOW WATER WEIR @ MILE 2.5**

SCALES: NONE
U. S. ARMY ENGINEER DISTRICT, VICKSBURG
CORPS OF ENGINEERS
VICKSBURG, MISSISSIPPI
DATE: MARCH 2003 FILE NO. ABM-14-9 PLATE NO. IV-21

USER INPUT, NO.
DESIGN FILENAME
PLOT SCALE

# APPENDIX C – ENGINEERING INVESTIGATIONS & ANALYSES FLOOD CONTROL COMPONENT

# SECTION IV – STRUCTURAL, MECHANICAL, ELECTRICAL & CIVIL DESIGN

# APPENDIX IV-C-A

| | S | T | U | V | W | X | Y | Z |
|---|---|---|---|---|---|---|---|---|
| 1 | 500-cfs Pump — Linear Interpolation Table | | | | | | | |
| 2 | Static Head | | Capacity | | Efficiency | | Brake hp | |
| 3 | (ft) | | (cfs) | | (%) | | (hp) | |
| 4 | -2.22 | -0.09 | 546.3 | 539.3 | 48.1% | 56.9% | 970.3 | 1012.5 |
| 5 | -0.09 | 2.04 | 539.3 | 532.3 | 56.9% | 63.5% | 1012.5 | 1075.8 |
| 6 | 2.04 | 4.22 | 532.3 | 523.9 | 63.5% | 68.8% | 1075.8 | 1139.1 |
| 7 | 4.22 | 6.42 | 523.9 | 514.4 | 68.8% | 73.2% | 1139.1 | 1202.3 |
| 8 | 6.42 | 8.63 | 514.4 | 504.4 | 73.2% | 77.3% | 1202.3 | 1255.1 |
| 9 | 8.63 | 10.89 | 504.4 | 493.0 | 77.3% | 80.6% | 1255.1 | 1307.8 |
| 10 | 10.89 | 13.15 | 493.0 | 481.0 | 80.6% | 82.5% | 1307.8 | 1371.1 |
| 11 | 13.15 | 15.45 | 481.0 | 467.5 | 82.5% | 84.2% | 1371.1 | 1423.8 |
| 12 | 15.45 | 17.72 | 467.5 | 454.6 | 84.2% | 86.2% | 1423.8 | 1466.0 |
| 13 | 17.72 | 20.04 | 454.6 | 439.6 | 86.2% | 88.5% | 1466.0 | 1487.1 |
| 14 | 20.04 | 22.36 | 439.6 | 424.2 | 88.5% | 90.2% | 1487.1 | 1508.2 |
| 15 | 22.36 | 24.67 | 424.2 | 408.7 | 90.2% | 92.0% | 1508.2 | 1518.7 |
| 16 | 24.67 | 26.98 | 408.7 | 392.3 | 92.0% | 92.6% | 1518.7 | 1539.8 |
| 17 | 26.98 | 29.31 | 392.3 | 374.3 | 92.6% | 92.3% | 1539.8 | 1560.9 |
| 18 | 29.31 | #VALUE! | 374.3 | #VALUE! | 92.3% | #VALUE! | 1560.9 | #VALUE! |
| 19 | | | | | | | | |
| 20 | 29.00 = Head | | | | | | | |
| 21 | 376.8 = Capacity | | | | | | | |
| 22 | 92.3% = Efficiency | | | | | | | |
| 23 | 1558.1 = Bhp | | | | | | | |
| 24 | 1750 = Mhp | | | | | | | |

# APPENDIX C – ENGINEERING INVESTIGATIONS & ANALYSES FLOOD CONTROL COMPONENT

# SECTION IV – STRUCTURAL, MECHANICAL, ELECTRICAL & CIVIL DESIGN

# APPENDIX IV-C-B

| | AB | AC | AD | AE | AF | AG | AH | AI |
|---|---|---|---|---|---|---|---|---|
| 1 | 1000-cfs Pump — Linear Interpolation Table | | | | | | | |
| 2 | Static Head | | Capacity | | Efficiency | | Brake hp | |
| 3 | (ft) | | (cfs) | | (%) | | (hp) | |
| 4 | -0.75 | 1.35 | 1229.2 | 1213.5 | 48.1% | 56.9% | 2183.2 | 2278.1 |
| 5 | 1.35 | 3.44 | 1213.5 | 1197.8 | 56.9% | 63.5% | 2278.1 | 2420.5 |
| 6 | 3.44 | 5.57 | 1197.8 | 1178.7 | 63.5% | 68.8% | 2420.5 | 2562.9 |
| 7 | 5.57 | 7.73 | 1178.7 | 1157.4 | 68.8% | 73.2% | 2562.9 | 2705.3 |
| 8 | 7.73 | 9.90 | 1157.4 | 1135.0 | 73.2% | 77.3% | 2705.3 | 2823.9 |
| 9 | 9.90 | 12.10 | 1135.0 | 1109.2 | 77.3% | 80.6% | 2823.9 | 2942.6 |
| 10 | 12.10 | 14.30 | 1109.2 | 1082.3 | 80.6% | 82.5% | 2942.6 | 3085.0 |
| 11 | 14.30 | 16.54 | 1082.3 | 1052.0 | 82.5% | 84.2% | 3085.0 | 3203.6 |
| 12 | 16.54 | 18.76 | 1052.0 | 1022.8 | 84.2% | 86.2% | 3203.6 | 3298.5 |
| 13 | 18.76 | 21.01 | 1022.8 | 989.2 | 86.2% | 88.5% | 3298.5 | 3346.0 |
| 14 | 21.01 | 23.27 | 989.2 | 954.4 | 88.5% | 90.2% | 3346.0 | 3393.4 |
| 15 | 23.27 | 25.51 | 954.4 | 919.6 | 90.2% | 92.0% | 3393.4 | 3417.2 |
| 16 | 25.51 | 27.76 | 919.6 | 882.6 | 92.0% | 92.6% | 3417.2 | 3464.6 |
| 17 | 27.76 | 30.03 | 882.6 | 842.3 | 92.6% | 92.3% | 3464.6 | 3512.1 |
| 18 | 30.03 | #VALUE! | 842.3 | #VALUE! | 92.3% | #VALUE! | 3512.1 | #VALUE! |
| 19 | | | | | | | | |
| 20 | 29.00 = Head | | | | | | | |
| 21 | 860.5 = Capacity | | | | | | | |
| 22 | 92.4% = Efficiency | | | | | | | |
| 23 | 3490.6 = Bhp | | | | | | | |
| 24 | 4000 = Mhp | | | | | | | |

# APPENDIX C – ENGINEERING INVESTIGATIONS & ANALYSES FLOOD CONTROL COMPONENT

# SECTION IV – STRUCTURAL, MECHANICAL, ELECTRICAL & CIVIL DESIGN

# APPENDIX IV-C-C

| Table B.2, Page 9 | | | |
|---|---|---|---|
| | Maximum Motor Hp | | |
| System Distribution Voltage | Induction, Wound-rotor, Synchronous (0.8 PF) | Synchronous (1.0 PF) | Interrupting Rating (MVA) Symmetrical 3-phase 50 or 60 Hz |
| **CR194 400 Ampere stationary and drawout [1]** | | | |
| 2400 | 1600 | 2000 | 200 |
| 4200 | 2800 | 3500 | 350 |
| 4800 | 3200 | 4000 | 400 |
| 7200 | 4800 | 6000 | 600 |
| **CR194 800 Ampere stationary [2]** | | | |
| 2400 | 3200 | 4000 | 200 |
| 4200 | 5600 | 7000 | 350 |
| 4800 | 6400 | 8000 | 400 |

NOTES:

1. Based on 400 A RMS maximum, enclosed, NEMA 1, vented one-high
2. Based on 800 A RMS maximum, enclosed, NEMA 1, vented one-high
3. For non-vented enclosures, apply a factor of 0.8 to the maximum hp

Source: *Limitamp® Medium-Voltage Motor Control, 2400-7200 Volts, Application and Selection Guide*, GET-6840B 0496 BL

# APPENDIX C – ENGINEERING INVESTIGATIONS & ANALYSES FLOOD CONTROL COMPONENT

## SECTION IV – STRUCTURAL, MECHANICAL, ELECTRICAL & CIVIL DESIGN

# APPENDIX IV-C-D

**Braswell, Hank T MVK**
**From:** Braswell, Hank T MVK
**Sent:** Tuesday, September 14, 1999 6:14 PM
**To:** Watkins, Gordon MVK
**Cc:** Lee, Fred MVK; Cary, Garland L MVK; Hite, Robert E MVK
**Subject:** RE: BAYOU METO PUMP STATION

Gordon,

Reference HEC-IFH User's Manual, Apr 92. As we discussed today, one large pump station alternative, located near the Big Bayou Meto Drainage Structure, is contemplated. In support of the study to determine the most economical pump station capacity, we will estimate the annual operating costs of operating the pump units. Such a power and energy cost study consists of 4 phases.

**PHASE I -- For each alternative, obtain data from ED-H for selecting pump curves**:

- Operating point (capacity and head)
- Maximum discharge elevation--maximum riverside elevation to be pumped against
- Elevation of levee at site
- Pump start and stop elevations
- Discharge configuration (i.e., over-the-levee, through-the-levee, siphon-assist, etc.)

**PHASE II -- Furnish pump curves for each alternative to ED-H for input to IFH**:

| Screen | Figure | Page | Comment |
|---|---|---|---|
| PUMP | 7.3 | 119 | Head loss set to 0.10; Pump Start and Stop elevations by ED-H. |

**PHASE III -- Obtain results from IFH**:
We will first make a limited study of the annual pump operating cost. Based on the results of that study, an extended study may be necessary. How the first costs are developed may also influence whether an extended study will be made. For the limited study and for each alternative, we need the following screen prints from the IFH CSA hydrologic analysis summaries:

| Screen | Figure | Page | Comment |
|---|---|---|---|
| D | 11.6 | 181 | Verification of pump station data |
| M | 11.39 | 206 | Monthly summaries of operating time and pump head |
| O | 11.45 | 211 | Water year annual summaries; many screens to be printed |
| Q | 11.50 | 215 | Maximum values |
| S | 11.52 | 218 | Exceedance duration table |
| V | 11.59 | 224 | Pump operation |

**PHASE IV -- Forecast annual pump operating costs**:
Since the site is fairly remote, electric service may be very expensive to connect. We will consider diesel-engine-driven pumps as well.

Hank

-----Original Message-----
**From:** Watkins, Gordon MVK
**Sent:** Tuesday, August 31, 1999 9:53 AM
**To:** Braswell, Hank T MVK
**Subject:** BAYOU METO PUMP STATION

HANK,
Could you please provide me with a paragraph stating the data required for your ananlysis of the pump station to include in the scope of work to the AE. Be sure to include the format you will need the data in. Also I will need to obtain the pump efficiency curves to provide the AE. We should have an idea in a couple of weeks the range of capacities we will analyze. Our

schedule is to go out on contract shortly after beginning of fy. If you have any questions give me a call at 1-7222.

Gordon Watkins, P.E.
Hydraulic Engineer
CEMVK-ED-HD

U. S. Army Engineer District, Vicksburg
4155 East Clay St.
Vicksburg, MS 39180-3435
Email: Gordon.Watkins@mvk02.usace.army.mil
(601)-631-7222 Phone
(601)-631-7231 Fax

http://www.mvk.usace.army.mil

**Braswell, Hank T MVK**
**From:** Braswell, Hank T MVK
**Sent:** Monday, April 03, 2000 7:29 AM
**To:** Watkins, Gordon MVK; Sullivan, Barry A MVK
**Cc:** Lee, Fred MVK; Cary, Garland L MVK; Hite, Robert E MVK
**Subject:** RE: BAYOU METO PUMP STATION

**Importance:** High

Gordon and Barry,

Updated data and revisions shown in blue. Reference HEC-IFH User's Manual, Apr 92. One large pump station, located near the Big Bayou Meto Drainage Structure, is contemplated. We understand that a pump station at Little Bayou Meto is now being contemplated. In support of the study to determine the most economical pump station capacity, we will estimate the annual operating costs of operating the pump units. Such a power and energy cost study consists of 4 phases.

**PHASE I -- For each alternative, obtain data from ED-H for selecting pump curves**:

- Elevation of levee at site: El. 194
- Maximum discharge elevation--maximum riverside elevation to be pumped against: El. 185 (highest stage on record, 1927)
- Discharge configuration (i.e., over-the-levee, through-the-levee, siphon-assist, etc.): Over-the-levee with siphon-assist.
- Invert of culverts: El. 145.67.
- Pool elevation: El. 162 which will be pump STOP elevation.
- Pump START and STOP elevations: El. 165 START; El. 162 STOP.
- Operating point (capacity and static head): Four pump size alternatives: 250 cfs, 500 cfs, 1000 cfs, 2000cfs; 23 ft. If more capacity is indicated, then multiple pump sizes (e.g., 500-, 1000- or 2000-cfs) will be modeled.
- 1 pump/station? Not necessarily, depends on electric utility requirements; Entergy/AP&L is probable local electric utility; quad map will be needed to assist AP&L with locating the nearest power line with sufficient capacity. If station will have multiple pumps, sequential start elevations will be incremented by 0.5-1.0 ft.
- Estimated station motor hp: 1000 hp, 2000 hp, 4000 hp, 8000 hp (for comparison, Lake Chicot PP has 10 3100-hp and 2 1250-hp pumps for a total station hp of 33,500-hp; 6500 cfs total station capacity, and Tensas-Cocodrie PP has 5 3000-hp pumps for a total station hp of 15,000-hp; 4000 cfs total station capacity).

**PHASE II -- Furnish static H-Q pump curves for each alternative to ED-H for input to IFH**:

| Screen | Figure | Page | Comment |
|---|---|---|---|
| PUMP | 7.3 | 119 | Head loss set to absolute minimum (0.10 ft.); Pump START and STOP elevations by ED-H. |

**PHASE III -- Obtain results from IFH**:
Screen prints from the IFH CSA hydrologic analysis summaries required for each alternative:

| Screen | Figure | Page | Comment |
|---|---|---|---|
| D | 11.6 | 181 | Verification of pump station data |
| M | 11.39 | 206 | Monthly summaries of operating time and pump head |
| O | 11.45 | 211 | Water year annual summaries; many screens to be printed |
| Q | 11.50 | 215 | Maximum values |
| S | 11.52 | 218 | Exceedance duration table |
| V | 11.59 | 224 | Pump operation |

Also, the DSS file from the IFH CSA for each alternative is required.

**PHASE IV -- Forecast annual pump operating costs**:
We will first make a limited study of the annual pump operating cost. Based on the results of that study, an extended study may be necessary. How the first costs are developed may also influence whether an extended study will be made. Since the site is fairly remote, electric service may be very expensive to connect. We will consider diesel-engine-driven pumps as well.

* * *

-----Original Message-----
**From:** Watkins, Gordon MVK
**Sent:** Tuesday, August 31, 1999 9:53 AM
**To:** Braswell, Hank T MVK
**Subject:** BAYOU METO PUMP STATION

HANK,
Could you please provide me with a paragraph stating the data required for your ananlysis of the pump station to include in the scope of work to the AE. Be sure to include the format you will need the data in. Also I will need to obtain the pump efficiency curves to provide the AE. We should have an idea in a couple of weeks the range of capacities we will analyze. Our schedule is to go out on contract shortly after beginning of fy. If you have any questions give me a call at 1-7222.

Gordon Watkins, P.E.
Hydraulic Engineer
CEMVK-ED-HD

U. S. Army Engineer District, Vicksburg
4155 East Clay St.
Vicksburg, MS 39180-3435
Email: Gordon.Watkins@mvk02.usace.army.mil
(601)-631-7222 Phone
(601)-631-7231 Fax

http://www.mvk.usace.army.mil

~~Previously updated data and revisions shown in blue. Newly updated data and revisions shown in red.~~ Reference HEC-IFH User's Manual, Apr 92. One large pump station, located near the Big Bayou Meto (BBM) Drainage Structure and a smaller ~~, is contemplated. We understand that a~~ pump station ~~at~~ near Little Bayou Meto (LBM) ~~is~~ are now ~~being~~ contemplated. In support of the study to determine the most economical pump station capacity, we will estimate the annual operating costs of operating the pump units. Such a power and energy cost study consists of 4 phases.

**PHASE I -- For each alternative, obtain data from ED-H for selecting pump curves for BBM only**:

- Elevation of levee at site: El. 194
- Maximum discharge elevation--maximum riverside elevation to be pumped against: El. 185 (highest stage on record, 1927)
- Discharge configuration (i.e., over-the-levee, through-the-levee, siphon-assist, etc.): Over-the-levee with siphon-assist.
- Invert of culverts: El. 145.67.
- Pool elevation: El. 162 which will be pump STOP elevation.
- Pump START and STOP elevations: El. 165 START; El. 162 STOP.
- Operating point (capacity and static head): Four pump sizes to be used in configuring the alternatives: 250 cfs, 500 cfs, 1000 cfs, 2000 cfs; ~~23~~ 6 ft operating, 29 ft priming. ~~If more capacity is indicated, then multiple pump sizes (e.g., 500-, 1000- or 2000-cfs) will be modeled.~~ The anticipated range of alternatives for BBM is 3000-8000 cfs; for LBM alone, 500-2000 cfs.
- 1 pump/station? Not necessarily, depends on electric utility requirements; Entergy/AP&L is probable local electric utility; quad map will be needed to assist AP&L with locating the nearest power line with sufficient capacity. Based on hp ranges given below, a subtransmission line and substation will be required for BBM; distribution substation upgrade will probably be required for LBM. If station will have multiple pumps, sequential start elevations will be incremented by 0.5-1.0 ft.
- Estimated station motor hp for BBM: ~~1000 hp, 2000 hp, 4000 hp, 8000 hp~~ 12000-32000 hp up to 15000-40000 hp (for comparison, Lake Chicot PP has 10 3100-hp and 2 1250-hp pumps for a total station hp of 33,500-hp; 6500 cfs total station capacity, and Tensas-Cocodrie PP has 5 3000-hp pumps for a total station hp of 15,000-hp; 4000 cfs total station capacity). The ranges are based on an empirical factors of 4 & 5 hp/cfs. Based on the pump curves, the pump motor sizes corresponding to 125 cfs, 250 cfs, 500 cfs, and 1000 cfs are 450 hp, 1000 hp, 1750 hp, and 4000 hp.
- Note that curves for the 2000-cfs pump model were not furnished; one reason is that highly specialized, custom—and prohibitively expensive— manufacturing would be required for pumps with runners larger than 10-ft diameter. Note also that curves for the 125-cfs pump model were furnished for use only at LBM.
- Period of Record: 1948-1997 (50 yrs)
- In any given alternative, use multiples of one size pump only; try not to mix pumps of different capacities in a station; this will simplify pump O&M.
    - At BBM, for the anticipated range of capacities (3000-8000 cfs), use the 1000 cfs model.
    - At LBM, for the anticipated range of capacities (500-2000 cfs), use a minimum of 4 pumps per alternative, owing to anticipated power company motor starting limitations.

What are same criteria for LBM? Barry to furnish these to Hank along with computation interval.

**PHASE II -- Furnish static H-Q pump curves for each alternative to ED-H for input to IFH**:

| Screen | Figure | Page | Comment |
|---|---|---|---|
| PUMP | 7.3 | 119 | Head loss set to absolute minimum (0.10 ft.); Pump START and STOP elevations by ED-H. |

Also furnish minimum submergence, minimum impeller height above base slab, and other factors dealing with pump installation.

Initial Pump Curves for ED-H.p...

**PHASE III -- Obtain results from IFH**:
Screen prints from the IFH CSA hydrologic analysis summaries required for each alternative:

| Screen | Figure | Page | Comment |
|---|---|---|---|
| D | 11.6 | 181 | Verification of pump station data |
| M | 11.39 | 206 | Monthly summaries of operating time and pump head |
| O | 11.45 | 211 | Water year annual summaries; many screens to be printed |
| Q | 11.50 | 215 | Maximum values |
| S | 11.52 | 218 | Exceedance duration table |
| V | 11.59 | 224 | Pump operation |

Also, the DSS file from the IFH CSA for each alternative is required.

**PHASE IV -- Forecast annual pump operating costs**:
We will first make a limited study of the annual pump operating cost. Based on the results of that study, an extended study may be necessary. How the first costs are developed may also influence whether an extended study will be made. Since the site is fairly remote, electric service may be very expensive to connect, especially since it appears that high-voltage work will be required of Entergy/AP&L. We will consider diesel-engine-driven pumps as well.

* * *

**Braswell, Hank T MVK**
**From:** Braswell, Hank T MVK
**Sent:** Saturday, April 29, 2000 11:44 AM
**To:** 'cwood@entergy.com'
**Subject:** Bayou Meto Pumping Plants, Feasibility Study

**Importance:** High
**Sensitivity:** Confidential

Charles,

1. I appreciate your assistance with, and interest in, this important project. As you requested, I am outlining subject study for determining the economically optimal plant configurations, if there are any. This information is *for Entergy's internal and official use only*.

2. One large pumping plant (BBM), to be located at the existing Big Bayou Meto Structure, and a smaller pumping plant (LBM), to be located at the existing Little Bayou Meto Structure, are being evaluated in three scenarios:

   a. BBM only
   b. LBM only
   c. BBM and LBM together

3. For each scenario, several alternative pump sizes will be selected. We will, as part of the overall feasibility study, determine the first costs and the annual operating costs associated with the pumps. Alternatives may be:

   a. For BBM: 3000- to 8000-cfs pumping plant alternatives in 1000-cfs increments; each alternative would consist of the required number of 1000-cfs pumps.
   b. LBM: 500- to 2000-cfs pumping plant alternatives in 500-cfs increments; each alternative may consist of 4 pumps.

4. Drivers for the pumps may consist of the following:

   a. Vertical, direct-driven, 3-phase electric motors
   b. Horizontal, gear-driven, 3-phase electric motors
   c. Internal combustion engines

5. Individual pump capacities and driver ratings, based on selected pump models, may be:

   a. 125 cfs (450 hp)
   b. 250 cfs (1000 hp)
   c. 500 cfs (1750 hp)
   d. 1000 cfs (4000 hp)

6. Medium-voltage controllers, subject to Entergy's approval, for the motors may be:

   a. Full-voltage
   b. Reduced-voltage autotransformer

c. Reduced-voltage solid-state

7. Flood hydrology computer simulations will be conducted to determine pump operation data over a 50-year period of historical meteorological and hydrological data (1948-1997). Those pump operation data, in conjunction with pump driver models and monthly fossil fuel and electric service unit costs, will result in 50-year estimated monthly billing and metering histories.

8. Bear in mind that the local sponsor, not the Corps of Engineers, will operate and maintain these pumping plants. Accordingly, the local sponsor will be responsible for contribution-in-aid of construction costs, monthly service charges, and all other costs associated with permanent electric service for the pumping plants.

9. This summer, we will furnishing more detailed requirements. At that time, we would appreciate Entergy providing the following data in support of subject feasibility study:

   a. Confirmation that BBM (T7S R4W S15) and LBM (T6S R5W S29) are in your service area
   b. Description of electric service facilities required for each alternative
   c. Estimated contribution-in-aid of construction costs and all other nonrecurring charges for each alternative
   d. Rate schedules, riders, and all other recurring charges applicable to each alternative (I understand that our neighboring Lake Chicot Pumping Plant is under the SGS rate schedule.)

10. Finally, let me reiterate that the above information is *for Entergy's internal and official use only.*

Sincerely,

***Hank T. Braswell, P.E.***
**U.S. Army Engineer District, Vicksburg,**
**CEMVK-ED-DC, ACME Section, Room 209**
**4155 Clay Street**
**Vicksburg, MS 39183-3435**

**Phone:** 601/631-5742 (8am-4pm)
**Fax:** 601/631-5583
**E-mail:** Hank.T.Braswell@mvk02.usace.army.mil
**Website:** http://www.mvk.usace.army.mil
[Updated 14 Apr 2000]

**Braswell, Hank T MVK**
**From:** BURNETTE, DAVID R [DBURNET@entergy.com]
**Sent:** Wednesday, July 05, 2000 11:46 AM
**To:** 'Braswell, Hank T MVK'
**Subject:** Bayou Meto progress

Hank,

Understand by your voicemail you are on vacation so want to send this email to update you on our progress.

Both sites are in our service territory. Considering the distances involved, the most likely method of serving the sites is through construction of a transmission tap. We are putting some very ball-parkish numbers together for your use on transmission line and substation construction costs. Around mid July we would like to schedule a call with you and discuss some of the larger issues and other questions that will arise as we begin to move forward. From that conference call, we can determine what the issues are and who should be included on the next call/or site meeting.

Some basic questions are:

- Exactly what is the nature and purpose of the project? Companion project to the Grand Prairie project. Although the main effort for these 2 projects is concerned with ground water depletion and irrigation, the pumping stations feasibility study is concerned with flood protection for the Bayou Meto Basin.
- Who will be the "local sponsor". The Bayou Meto Irrigation District is the potential project sponsor (Proj Coop Agreement has not been executed yet; only in draft stage).
- Have you hired an outside A/E firm for this project? Strange question. Why?
- Will the Corps want Entergy to own the potential substation?
- Will the be responsible for procuring Right of Way for transmission line extensions? If this is Entergy, will the Corps assist?
- We will need basic construction questions answered (for pricing estimate purposes) such as 2 way feed or lateral, fused substation or LTC?

I don't need these answers now but these are some of the things we will discuss during our next call. After that call, we can decide about the need of a site meeting. Let me know what your schedule is this week and I will call to discuss with you further.

Thanks,
db

PS....Do you have a contact in Little Rock who can discuss a couple accounts in Arkansas?

**Braswell, Hank T MVK**
**From:** Braswell, Hank T MVK
**Sent:** Friday, July 07, 2000 11:06 AM
**To:** 'BURNETTE, DAVID R'
**Subject:** RE: Bayou Meto progress

David,

I will be in the office Tue-Thu of next week. Please let me know the names and job titles of the others you will have take part in our teleconference so I can schedule the appropriate people.

I have answers to your basic questions. The questions I have - the ones that can be answered at this point - have been answered or will be answered in our teleconference.

Hank T. Braswell, P.E.
U.S. Army Engineer District, Vicksburg,
CEMVK-ED-DC, ACME Section, Room 209
4155 Clay Street
Vicksburg, MS 39183-3435

Phone: 601/631-5742 (8am-11am & 1pm-4pm)
Fax: 601/631-5583
E-mail: Hank.T.Braswell@mvk02.usace.army.mil
Website: http://www.mvk.usace.army.mil
[Updated 12 May 2000]

-----Original Message-----

**From:** **BURNETTE, DAVID R [mailto:DBURNET@entergy.com]**
Sent: Wednesday, July 05, 2000 11:46 am
To: 'Braswell, Hank T MVK'
Subject: Bayou Meto progress

Hank,

Understand by your voicemail you are on vacation so want to send this email to update you on our progress.

Both sites are in our service territory. Considering the distances involved, the most likely method of serving the sites is through construction of a transmission tap. We are putting some very ball-parkish numbers together for your use on transmission line and substation construction costs. Around mid July we would like to schedule a call with you and discuss some of the larger issues and other questions that will arise as we begin to move forward. From that conference call, we can determine what the issues are and who should be included on the next call/or site meeting.

Some basic questions are:

- Exactly what is the nature and purpose of the project?
- Who will be the "local sponsor".
- Have you hired an outside A/E firm for this project?

- Will the Corps want Entergy to own the potential substation?
- Will the be responsible for procuring Right of Way for transmission line extensions? If this is Entergy, will the Corps assist?
- We will need basic construction questions answered (for pricing estimate purposes) such as 2 way feed or lateral, fused substation or LTC?

I don't need these answers now but these are some of the things we will discuss during our next call. After that call, we can decide about the need of a site meeting. Let me know what your schedule is this week and I will call to discuss with you further.

Thanks,
db

PS....Do you have a contact in Little Rock who can discuss a couple accounts in Arkansas?

**Braswell, Hank T MVK**
**From:** BURNETTE, DAVID R [DBURNET@entergy.com]
**Sent:** Monday, November 05, 2001 3:38 PM
**To:** 'Braswell, Hank T MVK'
**Subject:** Summary of rates

Summary-July01
.xls

Hank,

Instead of taking the time to make the call and explain what I wanted, I decided to send you this info myself. For your information, the attachment is a summary of all our rates. SGS is on the first page right after the residential rates. The rate summaries are easier to use and include all the current riders whereas, the rate schedule just lists the demand and energy charges for the particular rate.

If you don't know this already, when looking at the summaries, the riders are M26 - Nuclear Decommissioning, M33- the Grand Gulf nuclear plant rider and ECR, which is energy cost recovery (fuel ).

If you have questions, give me a call. I always check voicemail and I will have my laptop this week checking emails.

David

Account Service Manager
Arkansas C & I Accounts
870-541-4747 (8-730-4747 internal)
870-692-0464 (mobile)
870-541-4738 (fax)

**Braswell, Hank T MVK**
**From:** Braswell, Hank T MVK
**Sent:** Monday, April 29, 2002 10:57 AM
**To:** 'BURNETTE, DAVID R'; VOGT, GEORGE Y; WOOD, CHARLES W
**Subject:** Little Bayou Meto Pumping Plant

1. Sorry for the short (practically nonexistent) fuse on this, but I was told recently that the numbers for the feasibility of subject pumping plant are due Tuesday 30 April 2002. Anything you can do to expedite this would be appreciated. Here's what we need in order of decreasing priority:

a. Voltage and liberally estimated length of distribution or transmission line required to serve the pumping plant for each alternative.

b. Budgetary unit cost in $/mile for the D-/T-line.

c. Budgetary lump-sum cost in $ for the substation that will adjoin the plant. Substation arrangements should be double-ended, even though the D-/T-line is radial.

(1) For the 1000-cfs pumping plant, two (2) 3750-kVA Class OA substation transformers with 4160Y/2400-V secondaries and low-resistance grounding. Note: The average annual electric bill, based on a 49-yr, 1-mo simulation is $321,800.

(2) For the 3000-cfs pumping plant, two (2) 12-MVA Class OA substation transformers with 4160Y/2400-V secondaries and low-resistance grounding. Note: The average annual electric bill, based on a 49-yr, 1-mo simulation is $601,400.

(3) We are no longer considering the 5000-cfs pumping plant.

d. I need the actual SGS rate schedule so I will know how to apply the different rates given in the summaries that David Burnette had sent me in a previous e-mail. I think I've made a pretty good stab at it, but I still need to verify that I understand the rate structure. Also, have all riders been included? What about a power-factor penalty rider?

2. Subject plant is to be located in T6S, R5W of Section 29. That's about 1.4 miles SSW of Reydell (Intersection of Hwy 88? And Hwy 11). The exact location is where Little Bayou Meto flows through the Ark. R. Levee.

3. The budgetary costs should be generous. If the feasibility study shows too low a B/C ratio, then it's a bust and no further consideration will be given to the 2 pumping plants mentioned above. However, if the B/C ratio is close to 1.0, then we will be asked to extend the design so that more specific information can be used to base first costs on; in other words, we'll have to dig a little deeper to fine-tune the costs. For example, instead of using a circuitous route for the T-line, a field survey might need to be performed to get a more accurate estimate of the T-line's length. Another thing we could do is do away with the double-ended substation in favor of a radial one.

Still another is to omit the low-resistance grounding, although that might be just shaving pennies off the first cost.

Thanks,

Hank T. Braswell, P.E.
Electrical Engineer
U.S. Army Engineer District, Vicksburg,
CEMVK-ED-DC, ACME Section, Room 209
4155 Clay Street
Vicksburg, MS 39183-3435

Phone: 601/631-5742 (8am-11am & 1pm-4pm)
Fax: 601/631-7065 or 601/631-5583
E-mail: Hank.T.Braswell@mvk02.usace.army.mil
Website: http://www.mvk.usace.army.mil
[Updated 11 Apr 2002]

**Braswell, Hank T MVK**
**From:** VOGT, GEORGE Y [GVOGT@entergy.com]
**Sent:** Monday, April 29, 2002 4:30 PM
**To:** 'Braswell, Hank T MVK'
**Cc:** HUNT, MARK WILLIAM; WOOD, CHARLES W; BURNETTE, DAVID R
**Subject:** RE: Little Bayou Meto Pumping Plant

Hank,
Here is the info that I can provide at this time:
1. The distance to the nearest Transmission line is 9.5 miles, 115 kV Woodward to Lake Village line, estimated at $265,000 per mile---Total= $2,517,500
2. 1,000 cfs pump station total= $958,000
3. 3,000 cfs pump station total= $1,480,000
4. The closest Distribution line is 24.5 miles at $89,500 per mile, BUT we believe there will be excessive voltage drop due to motor startup, and less reliable service from this line, and recommend against this approach.

George

-----Original Message-----

**From:** **Braswell, Hank T MVK [mailto:Hank.T.Braswell@mvk02.usace.army.mil]**
Sent: Monday, April 29, 2002 10:57 AM
To: BURNETTE, DAVID R; VOGT, GEORGE Y; WOOD, CHARLES W
Subject: Little Bayou Meto Pumping Plant

1. Sorry for the short (practically nonexistent) fuse on this, but I was told recently that the numbers for the feasibility of subject pumping plant are due Tuesday 30 April 2002. Anything you can do to expedite this would be appreciated. Here's what we need in order of decreasing priority:

a. Voltage and liberally estimated length of distribution or transmission line required to serve the pumping plant for each alternative.

b. Budgetary unit cost in $/mile for the D-/T-line.

c. Budgetary lump-sum cost in $ for the substation that will adjoin the plant. Substation arrangements should be double-ended, even though the D-/T-line is radial.

(1) For the 1000-cfs pumping plant, two (2) 3750-kVA Class OA substation transformers with 4160Y/2400-V secondaries and low-resistance grounding. Note: The average annual electric bill, based on a 49-yr, 1-mo simulation is $321,800.

(2) For the 3000-cfs pumping plant, two (2) 12-MVA Class OA substation transformers with 4160Y/2400-V secondaries and low-resistance grounding. Note: The average annual electric bill, based on a 49-yr, 1-mo simulation is $601,400.

(3) We are no longer considering the 5000-cfs pumping plant.

d. I need the actual SGS rate schedule so I will know how to apply the different rates given in the summaries that David Burnette had sent me in a previous e-mail. I think I've made a pretty good stab at it, but I still need to verify that I understand the rate structure. Also, have all riders been included? What about a power-factor penalty rider?

2. Subject plant is to be located in T6S, R5W of Section 29. That's about 1.4 miles SSW of Reydell (Intersection of Hwy 88? And Hwy 11). The exact location is where Little Bayou Meto flows through the Ark. R. Levee.

3. The budgetary costs should be generous. If the feasibility study shows too low a B/C ratio, then it's a bust and no further consideration will be given to the 2 pumping plants mentioned above. However, if the B/C ratio is close to 1.0, then we will be asked to extend the design so that more specific information can be used to base first costs on; in other words, we'll have to dig a little deeper to fine-tune the costs. For example, instead of using a circuitous route for the T-line, a field survey might need to be performed to get a more accurate estimate of the T-line's length. Another thing we could do is do away with the double-ended substation in favor of a radial one. Still another is to omit the low-resistance grounding, although that might be just shaving pennies off the first cost.

Thanks,

Hank T. Braswell, P.E.
Electrical Engineer
U.S. Army Engineer District, Vicksburg,
CEMVK-ED-DC, ACME Section, Room 209
4155 Clay Street
Vicksburg, MS 39183-3435

Phone: 601/631-5742 (8am-11am & 1pm-4pm)
Fax: 601/631-7065 or 601/631-5583
E-mail: Hank.T.Braswell@mvk02.usace.army.mil
Website: http://www.mvk.usace.army.mil <http://www.mvk.usace.army.mil>
[Updated 11 Apr 2002]

*****

**Braswell, Hank T MVK**
**From:** Braswell, Hank T MVK
**Sent:** Wednesday, May 01, 2002 3:25 PM
**To:** 'HUNT, MARK WILLIAM'
**Cc:** 'VOGT, GEORGE Y'; 'WOOD, CHARLES W'; 'BURNETTE, DAVID R'; Graham, Tim J MVK
**Subject:** Little Bayou Meto Pumping Plant

Mark,

Attached is an Adobe Acrobat PDF file showing the Metering and Billing History created from a hydrological/mechanical/electrical simulation over the period-of-record (49-yr, 1-mo). Would you be so kind as to review the results of the application of Rate Schedule SGS to confirm my understanding of it? Thanks,

BayouMet.pdf

Hank T. Braswell, P.E.
Electrical Engineer
U.S. Army Engineer District, Vicksburg,
CEMVK-ED-DC, ACME Section, Room 209
4155 Clay Street
Vicksburg, MS 39183-3435

Phone: 601/631-5742 (8am-11am & 1pm-4pm)
Fax: 601/631-7065 or 601/631-5583
E-mail: Hank.T.Braswell@mvk02.usace.army.mil
Website: http://www.mvk.usace.army.mil
[Updated 11 Apr 2002]

**Braswell, Hank T MVK**
**From:** Braswell, Hank T MVK
**Sent:** Wednesday, May 01, 2002 11:06 AM
**To:** 'VOGT, GEORGE Y'
**Cc:** HUNT, MARK WILLIAM; WOOD, CHARLES W; BURNETTE, DAVID R; Graham, Tim J MVK
**Subject:** RE: Little Bayou Meto Pumping Plant

George,

I need some information about the cost data.

1. Does the cost in Item 1 below include the cost for connecting the T-line at a substation on the Woodward to Lake Village line?

2. Are the costs in Items 2 and 3 below for the double-ended substations with low-resistance grounding?

By the beginning of next week, we should know which alternative, if any, is feasible.

Thanks,

Hank T. Braswell, P.E.
Electrical Engineer
U.S. Army Engineer District, Vicksburg,
CEMVK-ED-DC, ACME Section, Room 209
4155 Clay Street
Vicksburg, MS 39183-3435

Phone: 601/631-5742 (8am-11am & 1pm-4pm)
Fax: 601/631-7065 or 601/631-5583
E-mail: Hank.T.Braswell@mvk02.usace.army.mil
Website: http://www.mvk.usace.army.mil
[Updated 11 Apr 2002]

-----Original Message-----

**From:** **VOGT, GEORGE Y [mailto:GVOGT@entergy.com]**
Sent: Monday, April 29, 2002 4:30 PM
To: 'Braswell, Hank T MVK'
Cc: HUNT, MARK WILLIAM; WOOD, CHARLES W; BURNETTE, DAVID R
Subject: RE: Little Bayou Meto Pumping Plant

Hank,

Here is the info that I can provide at this time:

1. The distance to the nearest Transmission line is 9.5 miles, 115 kV Woodward to Lake Village line, estimated at $265,000 per mile--Total= $2,517,500
2. 1,000 cfs pump station total= $958,000
3. 3,000 cfs pump station total= $1,480,000
4. The closest Distribution line is 24.5 miles at $89,500 per mile, BUT we believe there will be excessive voltage drop due to motor

startup, and less reliable service from this line, and recommend against this approach.

George

**Braswell, Hank T MVK**
**From:** VOGT, GEORGE Y [GVOGT@entergy.com]
**Sent:** Thursday, May 02, 2002 9:41 AM
**To:** 'Braswell, Hank T MVK'
**Subject:** RE: Little Bayou Meto Pumping Plant

Hank,
The estimates are intended to include the costs of items 1. 2. and 3. in your below memo. These are estimates only. Actual results can vary by as much as plus/minus 20% at this early stage of the process.

George

-----Original Message-----

**From:** **Braswell, Hank T MVK**
**[mailto:Hank.T.Braswell@mvk02.usace.army.mil]**
Sent: Wednesday, May 01, 2002 11:06 AM
To: VOGT, GEORGE Y
Cc: HUNT, MARK WILLIAM; WOOD, CHARLES W; BURNETTE, DAVID R; Graham, Tim J
MVK
Subject: RE: Little Bayou Meto Pumping Plant

George,

I need some information about the cost data.

1. Does the cost in Item 1 below include the cost for connecting the T-line at a substation on the Woodward to Lake Village line?

2. Are the costs in Items 2 and 3 below for the double-ended substations with low-resistance grounding?

By the beginning of next week, we should know which alternative, if any, is feasible.

Thanks,

Hank T. Braswell, P.E.
Electrical Engineer
U.S. Army Engineer District, Vicksburg,
CEMVK-ED-DC, ACME Section, Room 209
4155 Clay Street
Vicksburg, MS 39183-3435

Phone: 601/631-5742 (8am-11am & 1pm-4pm)
Fax: 601/631-7065 or 601/631-5583
E-mail: Hank.T.Braswell@mvk02.usace.army.mil Website: http://www.mvk.usace.army.mil <http://www.mvk.usace.army.mil> [Updated 11 Apr 2002]

-----Original Message-----

**From:** **VOGT, GEORGE Y [ mailto:GVOGT@entergy.com <mailto:GVOGT@entergy.com>**
]
Sent: Monday, April 29, 2002 4:30 PM
To: 'Braswell, Hank T MVK'
Cc: HUNT, MARK WILLIAM; WOOD, CHARLES W; BURNETTE, DAVID R
Subject: RE: Little Bayou Meto Pumping Plant

Hank,

Here is the info that I can provide at this time:

1. The distance to the nearest Transmission line is 9.5 miles, 115 kV Woodward to Lake Village line, estimated at $265,000 per mile--Total= $2,517,500
2. 1,000 cfs pump station total= $958,000
3. 3,000 cfs pump station total= $1,480,000
4. The closest Distribution line is 24.5 miles at $89,500

per mile, BUT we believe there will be excessive voltage drop due to motor
startup, and less reliable
service from this line, and recommend against this approach.

George

**Braswell, Hank T MVK**
**From:** CARPENTER, DAVID J [DCARPE2@entergy.com]
**Sent:** Friday, May 03, 2002 8:14 AM
**To:** 'Hank T. Braswell-Corp of Engineers'
**Subject:** FW: Little Bayou Metro Pumping Plant

M1 Rider 1-04-01.doc | Summary Rates 4-1-2002.xls | SGS1-2002.pdf

Hank,
I may of had your email wrong the first time. See letter below:
David Carpenter

-----Original Message-----
**From:** **CARPENTER, DAVID J**
Sent: Thursday, May 02, 2002 9:53 AM
To: 'Hank T. Braswell-Corp of Engineers'
Cc: HUNT, MARK WILLIAM
Subject: Little Bayou Metro Pumping Plant

Hank,
I left you a voice mail.
Mark Hunt sent me your .pdf file on estimated demand and usage as applied
to rate SGS.
We bill on 90% of kVA, so it looks like the billed demands you list are a
little high. We recently had a decrease in our energy cost recovery rider
(ECR). As of now, the first block on SGS is $.05607/kWh and the second
block is $.04493/kWh. However, the ECR is subject to change every April
billing.
The billed demand charge will vary depending upon what voltage service is
delivered and taken. I have attached Voltage Adjustment Rider M1. The
$2.95/kW is the worst case.
The demand ratchet goes back for the following 12 months, including the
present month. Looks like some of the ratchets indicated only went back to
the first of the year. This makes very little difference based of the
history of example account .
I will forward the file to our rate department to review. An excel file
would be useful.
David Carpenter
Account Manager
501-396-4825
P.O. Box 551
Little Rock, AR 72203
A-9LA-2A

<<M1 Rider 1-04-01.doc>> <<Summary Rates 4-1-2002.xls>>
<<SGS1-2002.pdf>>

# ENTERGY ARKANSAS, INC.
## SUMMARY OF RATES
## EFFECTIVE FOR BILLINGS BEGINNING WITH CYCLE ONE FOR JULY, 2001

| All charges are in dollars ($) | (1) Present Rate | (2) M26 | (3) M33 | (4) Sub-Total | (5) ECR | (6) TOTAL * |
|---|---|---|---|---|---|---|
| **RESIDENTIAL (RS)** | | | | | | |
| Customer Charge | 6.94 | - | - | - | - | **6.94** |
| Three-Phase Charge | 2.73 | - | - | - | - | **2.73** |
| KWH Charge: | | | | | | |
| Summer | 0.06013 | 0.00000 | 0.00720 | 0.06733 | 0.01922 | **0.08655** |
| Other | | | | | | |
| 1st 1000 | 0.06013 | 0.00000 | 0.00720 | 0.06733 | 0.01922 | **0.08655** |
| Additional | 0.02990 | 0.00000 | 0.00720 | 0.03710 | 0.01922 | **0.05632** |
| Water Heating | 0.02990 | 0.00000 | 0.00720 | 0.03710 | 0.01922 | **0.05632** |
| Low/Level Use Provision | | | | | | |
| KWH Charge: | 0.05340 | 0.00000 | 0.00720 | 0.06060 | 0.01922 | **0.07982** |
| **RESIDENTIAL TIME-OF-USE (RT)** | | | | | | |
| Customer Charge | 11.05 | - | - | - | - | **11.05** |
| Three-Phase Charge | 2.73 | - | - | - | - | **2.73** |
| KWH Charge: | | | | | | |
| On-peak | 0.11627 | 0.00000 | 0.00720 | 0.12347 | 0.01922 | **0.14269** |
| Off-peak | 0.02295 | 0.00000 | 0.00720 | 0.03015 | 0.01922 | **0.04937** |
| **SMALL GENERAL SERVICE (SGS)** | | | | | | |
| Customer Charge | 16.24 | - | - | - | - | **16.24** |
| Minimum Kw Charge | 1.97 | - | - | - | - | **1.97** |
| KW Charge: | 2.95 | - | - | - | - | **2.95** |
| KWH Charge: | | | | | | |
| 1st 150 Kwh/Kw | 0.03771 | 0.00000 | 0.00579 | 0.04350 | 0.01922 | **0.06272** |
| Additional Kwh | 0.02657 | 0.00000 | 0.00579 | 0.03236 | 0.01922 | **0.05158** |
| **GENERAL FARM SERVICE (GFS)** | | | | | | |
| Customer Charge | 13.52 | - | - | - | - | **13.52** |
| Minimum KVA Charge | 1.02 | - | - | - | - | **1.02** |
| Three-Phase Service | 2.00 | - | - | - | - | **2.00** |
| KW Charge: | 2.63 | - | - | - | - | **2.63** |
| KWH Charge: | 0.02804 | 0.00000 | 0.00579 | 0.03383 | 0.01922 | **0.05305** |

*Franchise adjustment and sales taxes where applicable will apply to totals.

### 18.0. VOLTAGE ADJUSTMENT RIDER

### 18.1. AVAILABILITY

Available at the option of the Company to a customer receiving electric service under any approved Small General Service, Large General Service, or Large Power Service Rate Schedules where such service is delivered and/or metered at voltages of 13,800Y/7,960 or greater. Does not apply to Minimum provision of any Rate Schedule.

### 18.2. ADJUSTMENT TO NET MONTHLY RATE

This rate shall remain in effect until modified or terminated in accordance with its terms or applicable regulations or laws. (AT)

**18.2.1.** Service is delivered and metered at voltages less than 13,800Y/7,960.

No reduction in Demand or Energy.

**18.2.2.** Service is delivered at voltages less than 13,800Y/7,960 but metering is at voltages 13,800Y/7,960 or greater but less than 115,000 Volts.

Reduce Demand and Energy by 1% for losses.

**18.2.3.** Service is metered at voltages less than 13,800Y/7,960 and Customer owns and maintains all transformation facilities. (AT)

| Function: / Billing Item | Generation | Transmission | Distribution | Customer Service | Total |
|---|---|---|---|---|---|
| Reduce Monthly Demand Charge per kW by: | $0.00 | $0.00 | $0.77 | $0.00 | $0.77 |
| Reduce Daily Demand Charge per kW, if applicable, by: | $0.0000 | $0.0000 | $0.0253 | $0.0000 | $0.0253 |

**18.2.4.** Service is delivered and metered at voltages of 13,800Y/7,960 or greater but less than 115,000 Volts and Customer owns and maintains all transformation facilities. (AT)

| Function: / Billing Item | Generation | Transmission | Distribution | Customer Service | Total |
|---|---|---|---|---|---|
| Reduce Demand and Energy by 1.0% for losses; and, | | | | | |
| Reduce Monthly Demand Charge per kW by: | $0.00 | $0.00 | $0.77 | $0.00 | $0.77 |
| Reduce Daily Demand Charge per kW, if applicable, by: | $0.0000 | $0.0000 | $0.0253 | $0.0000 | $0.0253 |

**18.2.5.** Service is delivered at 115,000 Volts or greater but metered at a lower voltage. (AT, MT)

| Function: / Billing Item | Generation | Transmission | Distribution | Customer Service | Total |
|---|---|---|---|---|---|
| Reduce Demand and Energy by 1.0% for losses; and, Reduce Monthly Demand Charge per kW by: | $0.00 | $0.00 | $1.63 | $0.00 | $1.63 |
| Reduce Daily Demand Charge per kW, if applicable, by: | $0.0000 | $0.0000 | $0.0536 | $0.0000 | $0.0536 |

**18.2.6.** Service is delivered and metered at 115,000 Volts or greater. (AT)

| Function: / Billing Item | Generation | Transmission | Distribution | Customer Service | Total |
|---|---|---|---|---|---|
| Reduce Demand and Energy by 2.0% for losses; and, Reduce Monthly Demand Charge per kW by: | $0.00 | $0.00 | $1.63 | $0.00 | $1.63 |
| Reduce Daily Demand Charge per kW, if applicable, by: | $0.0000 | $0.0000 | $0.0536 | $0.0000 | $0.0536 |

**Braswell, Hank T MVK**
**From:** CARPENTER, DAVID J [DCARPE2@entergy.com]
**Sent:** Monday, May 06, 2002 4:45 PM
**To:** 'Hank T. Braswell-Corp of Engineers'
**Cc:** HUNT, MARK WILLIAM
**Subject:** FW: Little Bayou Metro Pumping Plant

Summary of
etering and Billli.

Hank,
I asked our rate department to update your spreadsheet with the latest SGS information and it is attached with two extra bookmarks. This assumes service is metered and delivered at low voltage. There are further discounts if take service and metered at higher voltages described in the Voltage Adjustment Rider I sent you last week.

David Carpenter

-----Original Message-----

**From:** **Braswell, Hank T MVK**
**[mailto:Hank.T.Braswell@mvk02.usace.army.mil]**
Sent: Monday, May 06, 2002 10:33 AM
To: CARPENTER, DAVID J
Cc: Graham, Tim J MVK
Subject: RE: Little Bayou Metro Pumping Plant

David,

XLS file attached as requested. I will call you about the SGS rates

sometime this week, hopefully today or tomorrow. Thanks for your help,

Hank T. Braswell, P.E.
Electrical Engineer
U.S. Army Engineer District, Vicksburg,
CEMVK-ED-DC, ACME Section, Room 209
4155 Clay Street
Vicksburg, MS 39183-3435

Phone: 601/631-5742 (8am-11am & 1pm-4pm)
Fax: 601/631-7065 or 601/631-5583
E-mail: Hank.T.Braswell@mvk02.usace.army.mil Website:
http://www.mvk.usace.army.mil <http://www.mvk.usace.army.mil> [Updated 11 Apr 2002]

-----Original Message-----

**From:** **CARPENTER, DAVID J [ mailto:DCARPE2@entergy.com**

<mailto:DCARPE2@entergy.com> ]
Sent: Friday, May 03, 2002 8:14 AM
To: 'Hank T. Braswell-Corp of Engineers'
Subject: FW: Little Bayou Metro Pumping Plant

Hank,
I may of had your email wrong the first time. See letter below:
David Carpenter

-----Original Message-----
**From: CARPENTER, DAVID J**
Sent: Thursday, May 02, 2002 9:53 AM
To: 'Hank T. Braswell-Corp of Engineers'
Cc: HUNT, MARK WILLIAM
Subject: Little Bayou Metro Pumping Plant

Hank,
I left you a voice mail.
Mark Hunt sent me your .pdf file on estimated demand and usage as applied
to rate SGS.
We bill on 90% of kVA, so it looks like the billed demands you list are a
little high. We recently had a decrease in our energy cost recovery rider

(ECR). As of now, the first block on SGS is $.05607/kWh and the second
block is $.04493/kWh. However, the ECR is subject to change every April
billing.
The billed demand charge will vary depending upon what voltage service is
delivered and taken. I have attached Voltage Adjustment Rider M1. The
$2.95/kW is the worst case.
The demand ratchet goes back for the following 12 months, including the
present month. Looks like some of the ratchets indicated only went back to

the first of the year. This makes very little difference based of the
history of example account .
I will forward the file to our rate department to review. An excel file
would be useful.
David Carpenter
Account Manager
501-396-4825
P.O. Box 551
Little Rock, AR 72203
A-9LA-2A
<<M1 Rider 1-04-01.doc>> <<Summary Rates 4-1-2002.xls>>
<<SGS1-2002.pdf>>

**Braswell, Hank T MVK**
**From:** Braswell, Hank T MVK
**Sent:** Monday, May 06, 2002 7:06 AM
**To:** 'VOGT, GEORGE Y'; Braswell, Hank T MVK
**Subject:** RE: Little Bayou Meto Pumping Plant

George,

Thanks for the clarifications. I asked for them because I remembered you mentioning that the substation cost would be the largest.

Also, ±20% is a lot tighter than what I was expecting, which was ±50% or more.

No need to reply to this message. I'll be in touch. Thanks very much for your help.

Hank T. Braswell, P.E.
Electrical Engineer
U.S. Army Engineer District, Vicksburg,
CEMVK-ED-DC, ACME Section, Room 209
4155 Clay Street
Vicksburg, MS 39183-3435

Phone: 601/631-5742 (8am-11am & 1pm-4pm)
Fax: 601/631-7065 or 601/631-5583
E-mail: Hank.T.Braswell@mvk02.usace.army.mil
Website: http://www.mvk.usace.army.mil
[Updated 11 Apr 2002]

-----Original Message-----

**From:** **VOGT, GEORGE Y [mailto:GVOGT@entergy.com]**
Sent: Thursday, May 02, 2002 9:41 AM
To: 'Braswell, Hank T MVK'
Subject: RE: Little Bayou Meto Pumping Plant

Hank,

The estimates are intended to include the costs of items 1. 2. and 3. in your below memo. These are estimates only. Actual results can vary by as much as plus/minus 20% at this early stage of the process.

George

-----Original Message-----

**From:** **Braswell, Hank T MVK [mailto:Hank.T.Braswell@mvk02.usace.army.mil]**
Sent: Wednesday, May 01, 2002 11:06 AM
To: VOGT, GEORGE Y
Cc: HUNT, MARK WILLIAM; WOOD, CHARLES W; BURNETTE, DAVID R; Graham, Tim J
MVK
Subject: RE: Little Bayou Meto Pumping Plant

George,

I need some information about the cost data.

1. Does the cost in Item 1 below include the cost for connecting the T-line at a substation on the Woodward to Lake Village line?
2. Are the costs in Items 2 and 3 below for the double-ended substations with low-resistance grounding?

By the beginning of next week, we should know which alternative, if any, is feasible.

Thanks,

Hank T. Braswell, P.E.
Electrical Engineer
U.S. Army Engineer District, Vicksburg,
CEMVK-ED-DC, ACME Section, Room 209
4155 Clay Street
Vicksburg, MS 39183-3435

Phone: 601/631-5742 (8am-11am & 1pm-4pm)
Fax: 601/631-7065 or 601/631-5583
E-mail: Hank.T.Braswell@mvk02.usace.army.mil
Website: http://www.mvk.usace.army.mil
<http://www.mvk.usace.army.mil>
[Updated 11 Apr 2002]

-----Original Message-----

**From: VOGT, GEORGE Y [ mailto:GVOGT@entergy.com <mailto:GVOGT@entergy.com>**
]
Sent: Monday, April 29, 2002 4:30 PM
To: 'Braswell, Hank T MVK'
Cc: HUNT, MARK WILLIAM; WOOD, CHARLES W; BURNETTE, DAVID R
Subject: RE: Little Bayou Meto Pumping Plant

Hank,

Here is the info that I can provide at this time:

1. The distance to the nearest Transmission line is 9.5 miles, 115 kV Woodward to Lake Village line, estimated at $265,000 per mile--Total= $2,517,500
2. 1,000 cfs pump station total= $958,000
3. 3,000 cfs pump station total= $1,480,000
4. The closest Distribution line is 24.5 miles at $89,500

per mile, BUT we believe there will be excessive voltage drop due to motor
startup, and less reliable
service from this line, and recommend against this approach.

George

**Braswell, Hank T MVK**
**From:** Braswell, Hank T MVK
**Sent:** Monday, May 06, 2002 10:33 AM
**To:** 'CARPENTER, DAVID J'
**Cc:** Graham, Tim J MVK
**Subject:** RE: Little Bayou Metro Pumping Plant

Summary of
etering and Billli.

David,

XLS file attached as requested. I will call you about the SGS rates sometime this week, hopefully today or tomorrow. Thanks for your help,

Hank T. Braswell, P.E.
Electrical Engineer
U.S. Army Engineer District, Vicksburg,
CEMVK-ED-DC, ACME Section, Room 209
4155 Clay Street
Vicksburg, MS 39183-3435

Phone: 601/631-5742 (8am-11am & 1pm-4pm)
Fax: 601/631-7065 or 601/631-5583
E-mail: Hank.T.Braswell@mvk02.usace.army.mil
Website: http://www.mvk.usace.army.mil
[Updated 11 Apr 2002]

-----Original Message-----

**From:** **CARPENTER, DAVID J [mailto:DCARPE2@entergy.com]**
Sent: Friday, May 03, 2002 8:14 AM
To: 'Hank T. Braswell-Corp of Engineers'
Subject: FW: Little Bayou Metro Pumping Plant

Hank,
I may of had your email wrong the first time. See letter below:
David Carpenter

-----Original Message-----
**From:** **CARPENTER, DAVID J**
Sent: Thursday, May 02, 2002 9:53 AM
To: 'Hank T. Braswell-Corp of Engineers'
Cc: HUNT, MARK WILLIAM
Subject: Little Bayou Metro Pumping Plant

Hank,
I left you a voice mail.
Mark Hunt sent me your .pdf file on estimated demand and usage as applied
to rate SGS.
We bill on 90% of kVA, so it looks like the billed demands you list are a
little high. We recently had a decrease in our energy cost recovery rider

(ECR). As of now, the first block on SGS is $.05607/kWh and the second
block is $.04493/kWh. However, the ECR is subject to change every April
billing.
The billed demand charge will vary depending upon what voltage service is
delivered and taken. I have attached Voltage Adjustment Rider M1. The
$2.95/kW is the worst case.
The demand ratchet goes back for the following 12 months, including the
present month. Looks like some of the ratchets indicated only went back to
the first of the year. This makes very little difference based of the
history of example account .
I will forward the file to our rate department to review. An excel file
would be useful.
David Carpenter
Account Manager
501-396-4825
P.O. Box 551
Little Rock, AR 72203
A-9LA-2A
<<M1 Rider 1-04-01.doc>> <<Summary Rates 4-1-2002.xls>>
<<SGS1-2002.pdf>>

## Braswell, Hank T MVK

**From:** Braswell, Hank T MVK
**Sent:** Tuesday, June 25, 2002 3:12 PM
**To:** 'GVOGT@entergy.com'
**Subject:** FW: Bayou Meto Basin Project, Hinged Crest Gate Structures

**Hank, 1-5742**
**ED-DC, Rm 209**

-----Original Message-----
**From:** Braswell, Hank T MVK
**Sent:** Wednesday, May 08, 2002 9:13 AM
**To:** 'DCARPE2@entergy.com'; 'MHUNT@entergy.com'
**Cc:** Graham, Tim J MVK
**Subject:** Bayou Meto Basin Project, Hinged Crest Gate Structures

Mark and David,

In addition to the pumping plant at Little Bayou Meto, there will be 2 hinged crest gate structures. One is called Salt Bayou; the other, Dry Bayou.

T4S, R7W; Section 1 for Salt Bayou and Section 6 for Dry Bayou. See saltdrylocation.jpg for an aerial photo with the structure locations marked in red. See saltdryvicinity.jpg for an excerpt from a quad map. I've been advised that these locations are difficult to get to now.

As it stands now, each structure have a hydraulic pump powered by a 20-hp motor and equipment heaters for the motors and equipment enclosures. Maximum demand for each structure will be on the order of 15 kW. Energy usage may be between 100-400 kWh/month. The extremely low annual load factor is a result of the motor producing the demand and the heaters consuming the energy.

Would you please send me budgetary estimates of the contributions-in-aid-of-construction for the line extensions and the applicable rate schedules and riders that I do not already have?

Thanks,

***Hank T. Braswell, P.E.***
**Electrical Engineer**
**U.S. Army Engineer District, Vicksburg,**
**CEMVK-ED-DC, ACME Section, Room 209**
**4155 Clay Street**
**Vicksburg, MS 39183-3435**

**Phone: 601/631-5742 (8am-11am & 1pm-4pm)**
**Fax: 601/631-7065 or 601/631-5583**
**E-mail: Hank.T.Braswell@mvk02.usace.army.mil**
**Website: http://www.mvk.usace.army.mil**

[Updated 11 Apr 2002]

**Braswell, Hank T MVK**
**From:** VOGT, GEORGE Y [GVOGT@entergy.com]
**Sent:** Monday, July 22, 2002 7:59 AM
**To:** 'Hank Braswell'
**Subject:** FW: Bayou Meto Basin Project, Hinged Crest Gate Structures

**Follow Up Flag:** Follow up
**Due By:** Monday, July 29, 2002 5:00 PM
**Flag Status:** Flagged

Hank,

An investigation reveals that this is not in Entergy service territory. Sorry for the delay in determining this.

George -----Original Message-----

**From:** **TAYLOR, JAMES DENNIS**
Sent: Friday, July 19, 2002 8:39 AM
To: COLLINS, JEFFERY A; VOGT, GEORGE Y
Cc: CARPENTER, DAVID J
Subject: RE: Bayou Meto Basin Project, Hinged Crest Gate Structures

George,

The interested parties should be advised that the two sites mentioned below that will need electric service are not in the Entergy service area. Both sites are south of Humphrey. I believe these will be in the First Electric Coop service area. They need to check with First Electric for further information.

Dennis Taylor

-----Original Message-----

**From:** **COLLINS, JEFFERY A**
Sent: Thursday, July 18, 2002 3:38 PM
To: VOGT, GEORGE Y
Cc: TAYLOR, JAMES DENNIS; CARPENTER, DAVID J
Subject: FW: Bayou Meto Basin Project, Hinged Crest Gate Structures

George,

This appears to be in Dennis Taylor's area. Dennis's phone number is 8-733-5624.

Jeff Collins
-----Original Message-----
**From:** **VOGT, GEORGE Y**
Sent: Tuesday, July 16, 2002 2:18 PM
To: COLLINS, JEFFERY A
Cc: CARPENTER, DAVID J
Subject: FW: Bayou Meto Basin Project, Hinged Crest Gate Structures

Jeff,

Can you provide this info?

George -----Original Message-----

**From:** **Braswell, Hank T MVK**
**[mailto:Hank.T.Braswell@mvk02.usace.army.mil]**
Sent: Tuesday, June 25, 2002 3:12 PM
To: VOGT, GEORGE Y
Subject: FW: Bayou Meto Basin Project, Hinged Crest Gate Structures

Hank, 1-5742

ED-DC, Rm 209

-----Original Message-----

**From:** **Braswell, Hank T MVK**
Sent: Wednesday, May 08, 2002 9:13 AM
To: 'DCARPE2@entergy.com'; 'MHUNT@entergy.com'
Cc: Graham, Tim J MVK
Subject: Bayou Meto Basin Project, Hinged Crest Gate Structures

Mark and David,

In addition to the pumping plant at Little Bayou Meto, there will be 2 hinged crest gate structures. One is called Salt Bayou; the other, Dry Bayou.

T4S, R7W; Section 1 for Salt Bayou and Section 6 for Dry Bayou. See saltdrylocation.jpg for an aerial photo with the structure locations marked in red. See saltdryvicinity.jpg for an

excerpt from a quad map. I've been advised that these locations are difficult to get to now.

As it stands now, each structure have a hydraulic pump powered by a 20-hp motor and equipment heaters for the motors and equipment enclosures. Maximum demand for each structure will be

on the order of 15 kW. Energy usage may be between 100-400 kWh/month. The extremely low annual load factor is a result of the motor producing the demand and the heaters consuming the

energy.

Would you please send me budgetary estimates of the contributions-in-aid-of-construction for the line extensions and the applicable rate schedules and riders that I do not already have?

Thanks,

Hank T. Braswell, P.E.

Electrical Engineer

U.S. Army Engineer District, Vicksburg,

CEMVK-ED-DC, ACME Section, Room 209

4155 Clay Street

Vicksburg, MS 39183-3435

Phone: 601/631-5742 (8am-11am & 1pm-4pm)

Fax: 601/631-7065 or 601/631-5583

E-mail: Hank.T.Braswell@mvk02.usace.army.mil

Website: http://www.mvk.usace.army.mil

[Updated 11 Apr 2002]

First Electric Co-op Corp
Stuttgart, AR 72160-6013
Tel: (800)489-3594 or (870)673-2695
Fax: (870)673-3695

Randy,

In addition to a pumping plant at Little Bayou Meto that is in Entergy's territory, there will be 2 hinged crest gate structures. One is called Salt Bayou; the other, Dry Bayou. T4S, R7W; Section 1 for Salt Bayou and Section 6 for Dry Bayou. An excerpt from a quad map follows.

As it stands now, each structure will have a hydraulic pump powered by a 20-hp motor and equipment heaters for the motors and equipment enclosures. Maximum demand for each structure will be on the order of 15 kW. Energy usage may be between 100-400 kWh/month. The low annual load factor is a result of the motor producing the demand and the heaters consuming the energy.

We need budgetary estimates of the contributions-in-aid-of-construction for the line extensions and the applicable rate schedule and riders. These estimates will be used in determining whether the Bayou Meto Basin Project is feasible.

If you have questions or need additional information, please call me. Thanks for your help.

***Hank T. Braswell, P.E.***
**Electrical Engineer**
**U.S. Army Engineer District, Vicksburg,**
**CEMVK-ED-DC, ACME Section, Room 209**
**4155 Clay Street**
**Vicksburg, MS 39183-3435**

**Phone: 601/631-5742 (8am-11am & 1pm-4pm)**
**Fax: 601/631-7065 or 601/631-5583**
**E-mail: Hank.T.Braswell@mvk02.usace.army.mil**
**Website: http://www.mvk.usace.army.mil**
[Updated 11 Apr 2002]

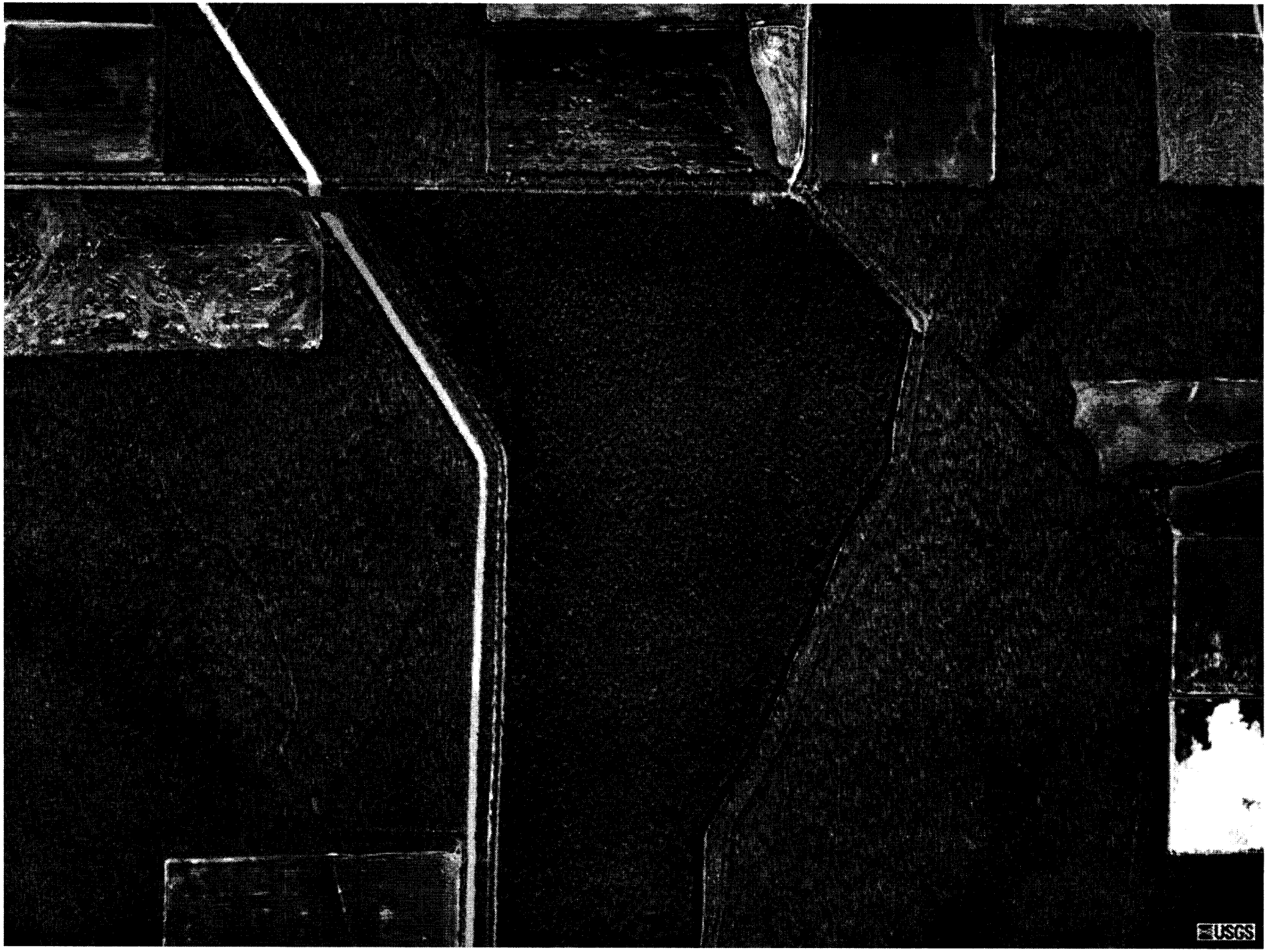
USGS

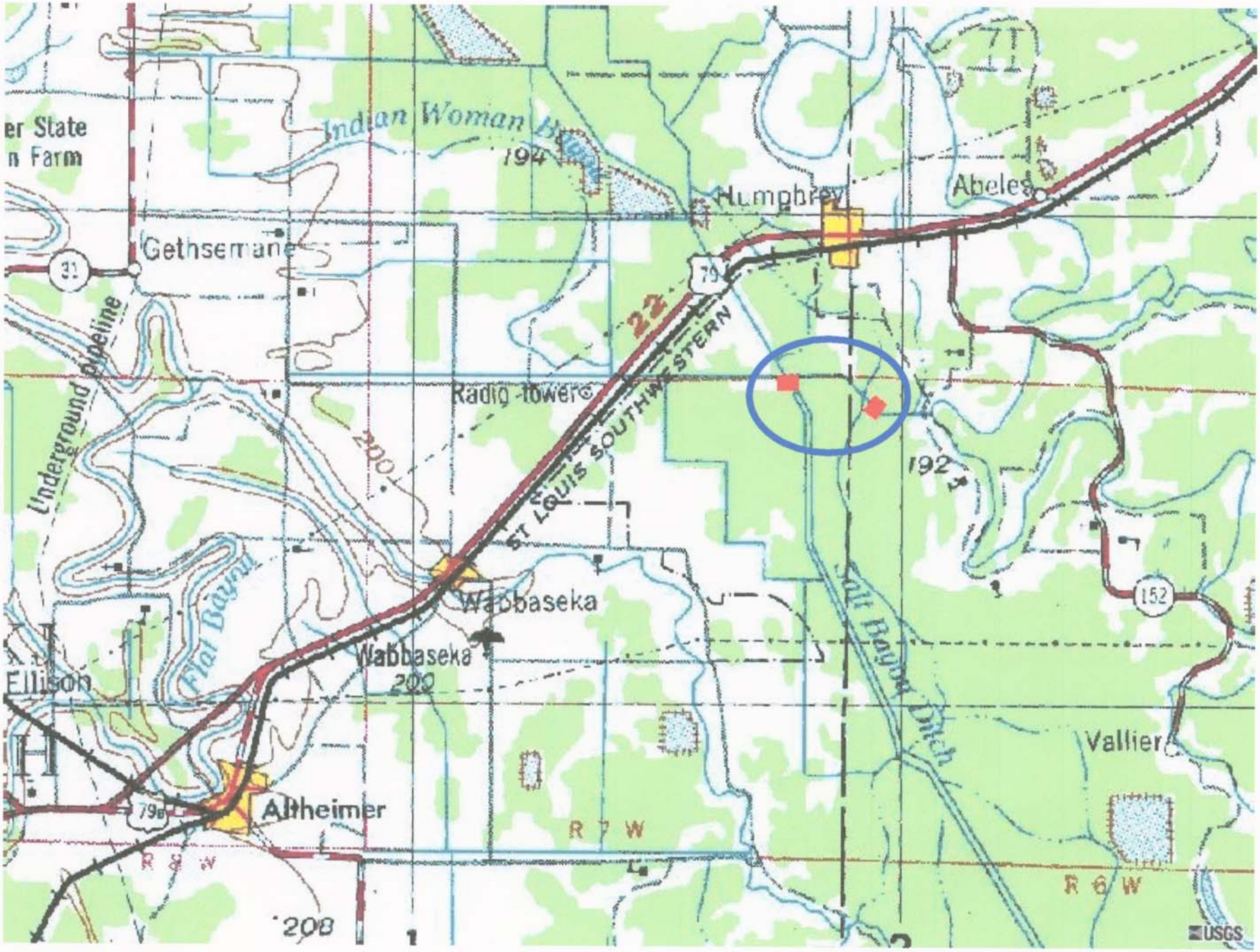
er State
n Farm
Indian Woman
194
Humphrey
Abeles
Gethsemane
31
79
22
ST LOUIS SOUTHWESTERN
Radio tower
Underground pipeline
200
192
Wabbaseka
Wabbaseka
200
Flat Bayou
Salt Bayou Ditch
152
Ellison
Vallier
Altheimer
79B
R 7 W
R 8 W
R 6 W
208
USGS

# APPENDIX C – ENGINEERING INVESTIGATIONS & ANALYSES FLOOD CONTROL COMPONENT

# SECTION IV – STRUCTURAL, MECHANICAL, ELECTRICAL & CIVIL DESIGN

# APPENDIX IV-C-E

Little Bayou Meto
Flood Control Pumping Plant
1000-cfs (2 1750-hp)



| | G | H | I | J | K | L | M | N | O | P | Q | R | S | T |
|---|---|---|---|---|---|---|---|---|---|---|---|---|---|---|
| 1 | DATE | Q | h_sump | h_static | h_total | N | Bhp | E_Load | M_Load | M_eff | M_pf | P_In | S_In | W_e |
| 8699 | 25-Oct-72 | 0 | 163.17 | | 0.10 | 0 | 0.0 | 0.0% | 0.0% | | | | | |
| 8700 | 26-Oct-72 | 0 | 163.37 | | 0.10 | 0 | 0.0 | 0.0% | 0.0% | | | | | |
| 8701 | 27-Oct-72 | 0 | 163.64 | | 0.10 | 0 | 0.0 | 0.0% | 0.0% | | | | | |
| 8702 | 28-Oct-72 | 0 | 163.62 | | 0.10 | 0 | 0.0 | 0.0% | 0.0% | | | | | |
| 8703 | 29-Oct-72 | 0 | 163.81 | | 0.10 | 0 | 0.0 | 0.0% | 0.0% | | | | | |
| 8704 | 30-Oct-72 | 0 | 164.67 | | 0.10 | 0 | 0.0 | 0.0% | 0.0% | | | | | |
| 8705 | 31-Oct-72 | 0 | 164.78 | | 0.10 | 0 | 0.0 | 0.0% | 0.0% | | | | | |
| 8706 | 01-Nov-72 | 0 | 165.41 | | 0.10 | 0 | 0.0 | 0.0% | 0.0% | | | | | |
| 8707 | 02-Nov-72 | 545 | 167.20 | 0.30 | 0.40 | 1 | 1027.0 | 60.4% | 59.3% | 91.9% | 86.3% | 841.9 | 975.3 | 20,205 |
| 8708 | 03-Nov-72 | 1,091 | 169.69 | 0.13 | 0.23 | 2 | 1021.9 | 60.1% | 59.0% | 91.8% | 86.3% | 1,676.0 | 1,943.0 | 40,225 |
| 8709 | 04-Nov-72 | 1,086 | 170.82 | 0.97 | 1.07 | 2 | 1046.9 | 61.6% | 60.4% | 92.0% | 86.5% | 1,713.9 | 1,980.4 | 41,134 |
| 8710 | 05-Nov-72 | 1,089 | 171.66 | 0.47 | 0.57 | 2 | 1032.0 | 60.7% | 59.6% | 91.9% | 86.4% | 1,691.4 | 1,958.2 | 40,593 |
| 8711 | 06-Nov-72 | 1,092 | 171.78 | 0.00 | 0.10 | 2 | 1018.0 | 59.9% | 58.8% | 91.8% | 86.2% | 1,670.2 | 1,937.2 | 40,084 |
| 8712 | 07-Nov-72 | 1,092 | 171.46 | 0.00 | 0.10 | 2 | 1018.0 | 59.9% | 58.8% | 91.8% | 86.2% | 1,670.2 | 1,937.2 | 40,084 |
| 8713 | 08-Nov-72 | 1,092 | 171.20 | 0.00 | 0.10 | 2 | 1018.0 | 59.9% | 58.8% | 91.8% | 86.2% | 1,670.2 | 1,937.2 | 40,084 |
| 8714 | 09-Nov-72 | 1,092 | 171.03 | 0.00 | 0.10 | 2 | 1018.0 | 59.9% | 58.8% | 91.8% | 86.2% | 1,670.2 | 1,937.2 | 40,084 |
| 8715 | 10-Nov-72 | 1,092 | 171.09 | 0.00 | 0.10 | 2 | 1018.0 | 59.9% | 58.8% | 91.8% | 86.2% | 1,670.2 | 1,937.2 | 40,084 |
| 8716 | 11-Nov-72 | 1,092 | 170.97 | 0.00 | 0.10 | 2 | 1018.0 | 59.9% | 58.8% | 91.8% | 86.2% | 1,670.2 | 1,937.2 | 40,084 |
| 8717 | 12-Nov-72 | 1,092 | 170.95 | 0.00 | 0.10 | 2 | 1018.0 | 59.9% | 58.8% | 91.8% | 86.2% | 1,670.2 | 1,937.2 | 40,084 |
| 8718 | 13-Nov-72 | 1,092 | 171.36 | 0.00 | 0.10 | 2 | 1018.0 | 59.9% | 58.8% | 91.8% | 86.2% | 1,670.2 | 1,937.2 | 40,084 |
| 8719 | 14-Nov-72 | 1,092 | 171.13 | 0.00 | 0.10 | 2 | 1018.0 | 59.9% | 58.8% | 91.8% | 86.2% | 1,670.2 | 1,937.2 | 40,084 |
| 8720 | 15-Nov-72 | 1,092 | 171.33 | 0.00 | 0.10 | 2 | 1018.0 | 59.9% | 58.8% | 91.8% | 86.2% | 1,670.2 | 1,937.2 | 40,084 |
| 8721 | 16-Nov-72 | 1,092 | 171.40 | 0.00 | 0.10 | 2 | 1018.0 | 59.9% | 58.8% | 91.8% | 86.2% | 1,670.2 | 1,937.2 | 40,084 |
| 8722 | 17-Nov-72 | 1,092 | 172.10 | 0.03 | 0.13 | 2 | 1018.9 | 60.0% | 58.8% | 91.8% | 86.2% | 1,671.5 | 1,938.5 | 40,117 |
| 8723 | 18-Nov-72 | 1,092 | 172.32 | 0.00 | 0.10 | 2 | 1018.0 | 59.9% | 58.8% | 91.8% | 86.2% | 1,670.2 | 1,937.2 | 40,084 |
| 8724 | 19-Nov-72 | 1,091 | 172.52 | 0.12 | 0.22 | 2 | 1021.6 | 60.1% | 59.0% | 91.8% | 86.3% | 1,675.6 | 1,942.6 | 40,214 |
| 8725 | 20-Nov-72 | 1,092 | 172.70 | 0.00 | 0.10 | 2 | 1018.0 | 59.9% | 58.8% | 91.8% | 86.2% | 1,670.2 | 1,937.2 | 40,084 |
| 8726 | 21-Nov-72 | 1,092 | 172.73 | 0.00 | 0.10 | 2 | 1018.0 | 59.9% | 58.8% | 91.8% | 86.2% | 1,670.2 | 1,937.2 | 40,084 |
| 8727 | 22-Nov-72 | 1,091 | 172.92 | 0.23 | 0.33 | 2 | 1024.9 | 60.3% | 59.2% | 91.9% | 86.3% | 1,680.6 | 1,947.5 | 40,334 |
| 8728 | 23-Nov-72 | 1,092 | 173.01 | 0.00 | 0.10 | 2 | 1018.0 | 59.9% | 58.8% | 91.8% | 86.2% | 1,670.2 | 1,937.2 | 40,084 |
| 8729 | 24-Nov-72 | 1,092 | 172.92 | 0.00 | 0.10 | 2 | 1018.0 | 59.9% | 58.8% | 91.8% | 86.2% | 1,670.2 | 1,937.2 | 40,084 |
| 8730 | 25-Nov-72 | 1,092 | 172.78 | 0.00 | 0.10 | 2 | 1018.0 | 59.9% | 58.8% | 91.8% | 86.2% | 1,670.2 | 1,937.2 | 40,084 |
| 8731 | 26-Nov-72 | 1,092 | 172.75 | 0.00 | 0.10 | 2 | 1018.0 | 59.9% | 58.8% | 91.8% | 86.2% | 1,670.2 | 1,937.2 | 40,084 |
| 8732 | 27-Nov-72 | 1,092 | 172.58 | 0.00 | 0.10 | 2 | 1018.0 | 59.9% | 58.8% | 91.8% | 86.2% | 1,670.2 | 1,937.2 | 40,084 |
| 8733 | 28-Nov-72 | 1,092 | 172.27 | 0.00 | 0.10 | 2 | 1018.0 | 59.9% | 58.8% | 91.8% | 86.2% | 1,670.2 | 1,937.2 | 40,084 |
| 8734 | 29-Nov-72 | 1,092 | 171.70 | 0.00 | 0.10 | 2 | 1018.0 | 59.9% | 58.8% | 91.8% | 86.2% | 1,670.2 | 1,937.2 | 40,084 |
| 8735 | 30-Nov-72 | 1,092 | 171.29 | 0.00 | 0.10 | 2 | 1018.0 | 59.9% | 58.8% | 91.8% | 86.2% | 1,670.2 | 1,937.2 | 40,084 |
| 8736 | 01-Dec-72 | 1,092 | 170.58 | 0.00 | 0.10 | 2 | 1018.0 | 59.9% | 58.8% | 91.8% | 86.2% | 1,670.2 | 1,937.2 | 40,084 |
| 8737 | 02-Dec-72 | 1,092 | 170.28 | 0.00 | 0.10 | 2 | 1018.0 | 59.9% | 58.8% | 91.8% | 86.2% | 1,670.2 | 1,937.2 | 40,084 |

Little Bayou Meto
Flood Control Pumping Plant
1000-cfs (2 1750-hp)



| | G | H | I | J | K | L | M | N | O | P | Q | R | S | T |
|---|---|---|---|---|---|---|---|---|---|---|---|---|---|---|
| 1 | DATE | Q | h_sump | h_static | h_total | N | Bhp | E_Load | M_Load | M_eff | M_pf | P_In | S_In | W_e |
| 8738 | 03-Dec-72 | 1,091 | 169.62 | 0.20 | 0.30 | 2 | 1024.0 | 60.3% | 59.1% | 91.9% | 86.3% | 1,679.2 | 1,946.2 | 40,301 |
| 8739 | 04-Dec-72 | 1,080 | 167.70 | 2.12 | 2.22 | 2 | 1081.0 | 63.6% | 62.4% | 92.2% | 86.9% | 1,765.3 | 2,030.8 | 42,368 |
| 8740 | 05-Dec-72 | 1,048 | 163.38 | 6.44 | 6.54 | 2 | 1205.2 | 70.9% | 69.6% | 93.1% | 88.3% | 1,950.6 | 2,208.3 | 46,815 |
| 8741 | 06-Dec-72 | 0 | 159.04 | | 0.10 | 0 | 0.0 | 0.0% | 0.0% | | | | | |
| 8742 | 07-Dec-72 | 0 | 164.92 | | 0.10 | 0 | 0.0 | 0.0% | 0.0% | | | | | |
| 8743 | 08-Dec-72 | 1,087 | 168.49 | 0.87 | 0.97 | 2 | 1043.9 | 61.4% | 60.2% | 92.0% | 86.5% | 1,709.4 | 1,976.0 | 41,026 |
| 8744 | 09-Dec-72 | 1,058 | 164.22 | 5.14 | 5.24 | 2 | 1168.5 | 68.8% | 67.4% | 92.8% | 87.9% | 1,896.2 | 2,156.8 | 45,508 |
| 8745 | 10-Dec-72 | 0 | 160.28 | | 0.10 | 0 | 0.0 | 0.0% | 0.0% | | | | | |
| 8746 | 11-Dec-72 | 1,092 | 169.39 | 0.00 | 0.10 | 2 | 1018.0 | 59.9% | 58.8% | 91.8% | 86.2% | 1,670.2 | 1,937.2 | 40,084 |
| 8747 | 12-Dec-72 | 1,092 | 169.55 | 0.00 | 0.10 | 2 | 1018.0 | 59.9% | 58.8% | 91.8% | 86.2% | 1,670.2 | 1,937.2 | 40,084 |
| 8748 | 13-Dec-72 | 1,092 | 170.07 | 0.00 | 0.10 | 2 | 1018.0 | 59.9% | 58.8% | 91.8% | 86.2% | 1,670.2 | 1,937.2 | 40,084 |
| 8749 | 14-Dec-72 | 1,092 | 170.23 | 0.00 | 0.10 | 2 | 1018.0 | 59.9% | 58.8% | 91.8% | 86.2% | 1,670.2 | 1,937.2 | 40,084 |
| 8750 | 15-Dec-72 | 1,092 | 170.47 | 0.00 | 0.10 | 2 | 1018.0 | 59.9% | 58.8% | 91.8% | 86.2% | 1,670.2 | 1,937.2 | 40,084 |
| 8751 | 16-Dec-72 | 1,092 | 170.88 | 0.00 | 0.10 | 2 | 1018.0 | 59.9% | 58.8% | 91.8% | 86.2% | 1,670.2 | 1,937.2 | 40,084 |
| 8752 | 17-Dec-72 | 1,092 | 171.21 | 0.00 | 0.10 | 2 | 1018.0 | 59.9% | 58.8% | 91.8% | 86.2% | 1,670.2 | 1,937.2 | 40,084 |
| 8753 | 18-Dec-72 | 1,092 | 171.24 | 0.00 | 0.10 | 2 | 1018.0 | 59.9% | 58.8% | 91.8% | 86.2% | 1,670.2 | 1,937.2 | 40,084 |
| 8754 | 19-Dec-72 | 1,092 | 171.18 | 0.00 | 0.10 | 2 | 1018.0 | 59.9% | 58.8% | 91.8% | 86.2% | 1,670.2 | 1,937.2 | 40,084 |
| 8755 | 20-Dec-72 | 1,092 | 171.34 | 0.00 | 0.10 | 2 | 1018.0 | 59.9% | 58.8% | 91.8% | 86.2% | 1,670.2 | 1,937.2 | 40,084 |
| 8756 | 21-Dec-72 | 1,092 | 171.22 | 0.00 | 0.10 | 2 | 1018.0 | 59.9% | 58.8% | 91.8% | 86.2% | 1,670.2 | 1,937.2 | 40,084 |
| 8757 | 22-Dec-72 | 1,092 | 170.54 | 0.00 | 0.10 | 2 | 1018.0 | 59.9% | 58.8% | 91.8% | 86.2% | 1,670.2 | 1,937.2 | 40,084 |
| 8758 | 23-Dec-72 | 1,092 | 170.13 | 0.00 | 0.10 | 2 | 1018.0 | 59.9% | 58.8% | 91.8% | 86.2% | 1,670.2 | 1,937.2 | 40,084 |
| 8759 | 24-Dec-72 | 1,092 | 169.93 | 0.00 | 0.10 | 2 | 1018.0 | 59.9% | 58.8% | 91.8% | 86.2% | 1,670.2 | 1,937.2 | 40,084 |
| 8760 | 25-Dec-72 | 1,092 | 169.58 | 0.00 | 0.10 | 2 | 1018.0 | 59.9% | 58.8% | 91.8% | 86.2% | 1,670.2 | 1,937.2 | 40,084 |
| 8761 | 26-Dec-72 | 1,092 | 169.31 | 0.00 | 0.10 | 2 | 1018.0 | 59.9% | 58.8% | 91.8% | 86.2% | 1,670.2 | 1,937.2 | 40,084 |
| 8762 | 27-Dec-72 | 1,092 | 168.54 | 0.00 | 0.10 | 2 | 1018.0 | 59.9% | 58.8% | 91.8% | 86.2% | 1,670.2 | 1,937.2 | 40,084 |
| 8763 | 28-Dec-72 | 1,092 | 168.45 | 0.00 | 0.10 | 2 | 1018.0 | 59.9% | 58.8% | 91.8% | 86.2% | 1,670.2 | 1,937.2 | 40,084 |
| 8764 | 29-Dec-72 | 1,092 | 168.33 | 0.00 | 0.10 | 2 | 1018.0 | 59.9% | 58.8% | 91.8% | 86.2% | 1,670.2 | 1,937.2 | 40,084 |
| 8765 | 30-Dec-72 | 1,092 | 168.10 | 0.00 | 0.10 | 2 | 1018.0 | 59.9% | 58.8% | 91.8% | 86.2% | 1,670.2 | 1,937.2 | 40,084 |
| 8766 | 31-Dec-72 | 1,091 | 167.94 | 0.10 | 0.20 | 2 | 1021.0 | 60.1% | 58.9% | 91.8% | 86.2% | 1,674.7 | 1,941.7 | 40,193 |
| 8767 | 01-Jan-73 | 1,088 | 167.04 | 0.73 | 0.83 | 2 | 1039.8 | 61.2% | 60.0% | 92.0% | 86.5% | 1,703.1 | 1,969.8 | 40,875 |
| 8768 | 02-Jan-73 | 1,076 | 165.00 | 2.77 | 2.87 | 2 | 1099.9 | 64.7% | 63.5% | 92.4% | 87.1% | 1,793.8 | 2,058.4 | 43,051 |
| 8769 | 03-Jan-73 | 0 | 161.56 | | 0.10 | 0 | 0.0 | 0.0% | 0.0% | | | | | |
| 8770 | 04-Jan-73 | 1,090 | 167.72 | 0.32 | 0.42 | 2 | 1027.6 | 60.5% | 59.3% | 91.9% | 86.3% | 1,684.6 | 1,951.5 | 40,431 |
| 8771 | 05-Jan-73 | 0 | 162.71 | | 0.10 | 0 | 0.0 | 0.0% | 0.0% | | | | | |
| 8772 | 06-Jan-73 | 1,083 | 167.62 | 1.50 | 1.60 | 2 | 1062.7 | 62.5% | 61.3% | 92.1% | 86.7% | 1,737.7 | 2,003.8 | 41,706 |
| 8773 | 07-Jan-73 | 0 | 162.80 | | 0.10 | 0 | 0.0 | 0.0% | 0.0% | | | | | |
| 8774 | 08-Jan-73 | 1,087 | 168.44 | 0.92 | 1.02 | 2 | 1045.4 | 61.5% | 60.3% | 92.0% | 86.5% | 1,711.7 | 1,978.2 | 41,080 |
| 8775 | 09-Jan-73 | 1,069 | 165.79 | 3.80 | 3.90 | 2 | 1129.9 | 66.5% | 65.2% | 92.6% | 87.5% | 1,838.7 | 2,101.8 | 44,128 |
| 8776 | 10-Jan-73 | 1,054 | 163.71 | 5.65 | 5.75 | 2 | 1183.1 | 69.6% | 68.3% | 92.9% | 88.1% | 1,917.9 | 2,177.4 | 46,030 |

Little Bayou Meto
Flood Control Pumping Plant
1000-cfs (2 1750-hp)



| | G | H | I | J | K | L | M | N | O | P | Q | R | S | T |
|---|---|---|---|---|---|---|---|---|---|---|---|---|---|---|
| 1 | DATE | Q | h_sump | h_static | h_total | N | Bhp | E_Load | M_Load | M_eff | M_pf | P_In | S_In | W_e |
| 8777 | 11-Jan-73 | 0 | 162.65 | | 0.10 | 0 | 0.0 | 0.0% | 0.0% | | | | | |
| 8778 | 12-Jan-73 | 1,092 | 169.73 | 0.00 | 0.10 | 2 | 1018.0 | 59.9% | 58.8% | 91.8% | 86.2% | 1,670.2 | 1,937.2 | 40,084 |
| 8779 | 13-Jan-73 | 1,088 | 168.90 | 0.69 | 0.79 | 2 | 1038.6 | 61.1% | 59.9% | 92.0% | 86.4% | 1,701.3 | 1,968.0 | 40,831 |
| 8780 | 14-Jan-73 | 1,081 | 167.54 | 1.82 | 1.92 | 2 | 1072.2 | 63.1% | 61.9% | 92.2% | 86.8% | 1,752.1 | 2,017.9 | 42,050 |
| 8781 | 15-Jan-73 | 1,067 | 165.28 | 4.08 | 4.18 | 2 | 1138.0 | 67.0% | 65.7% | 92.6% | 87.6% | 1,850.8 | 2,113.5 | 44,420 |
| 8782 | 16-Jan-73 | 0 | 161.75 | | 0.10 | 0 | 0.0 | 0.0% | 0.0% | | | | | |
| 8783 | 17-Jan-73 | 1,084 | 167.89 | 1.47 | 1.57 | 2 | 1061.8 | 62.5% | 61.3% | 92.1% | 86.7% | 1,736.4 | 2,002.5 | 41,673 |
| 8784 | 18-Jan-73 | 1,049 | 163.22 | 6.37 | 6.47 | 2 | 1203.5 | 70.8% | 69.5% | 93.1% | 88.3% | 1,948.2 | 2,205.9 | 46,756 |
| 8785 | 19-Jan-73 | 0 | 159.03 | | 0.10 | 0 | 0.0 | 0.0% | 0.0% | | | | | |
| 8786 | 20-Jan-73 | 0 | 164.38 | | 0.10 | 0 | 0.0 | 0.0% | 0.0% | | | | | |
| 8787 | 21-Jan-73 | 539 | 167.30 | 2.29 | 2.39 | 1 | 1085.9 | 63.9% | 62.7% | 92.3% | 87.0% | 886.4 | 1,019.0 | 21,273 |
| 8788 | 22-Jan-73 | 528 | 165.07 | 5.44 | 5.54 | 1 | 1177.1 | 69.3% | 67.9% | 92.9% | 88.0% | 954.5 | 1,084.5 | 22,908 |
| 8789 | 23-Jan-73 | 526 | 165.73 | 5.89 | 5.99 | 1 | 1190.0 | 70.0% | 68.7% | 93.0% | 88.2% | 964.1 | 1,093.5 | 23,138 |
| 8790 | 24-Jan-73 | 1,069 | 170.26 | 3.69 | 3.79 | 2 | 1126.7 | 66.3% | 65.0% | 92.5% | 87.4% | 1,833.9 | 2,097.2 | 44,013 |
| 8791 | 25-Jan-73 | 1,075 | 171.67 | 2.92 | 3.02 | 2 | 1104.3 | 65.0% | 63.7% | 92.4% | 87.2% | 1,800.3 | 2,064.8 | 43,208 |
| 8792 | 26-Jan-73 | 1,079 | 172.48 | 2.27 | 2.37 | 2 | 1085.4 | 63.9% | 62.6% | 92.3% | 87.0% | 1,771.9 | 2,037.2 | 42,526 |
| 8793 | 27-Jan-73 | 1,082 | 172.82 | 1.77 | 1.87 | 2 | 1070.7 | 63.0% | 61.8% | 92.2% | 86.8% | 1,749.8 | 2,015.7 | 41,996 |
| 8794 | 28-Jan-73 | 1,086 | 173.09 | 1.02 | 1.12 | 2 | 1048.4 | 61.7% | 60.5% | 92.0% | 86.6% | 1,716.2 | 1,982.6 | 41,188 |
| 8795 | 29-Jan-73 | 1,088 | 173.36 | 0.75 | 0.85 | 2 | 1040.3 | 61.2% | 60.0% | 92.0% | 86.5% | 1,704.0 | 1,970.7 | 40,896 |
| 8796 | 30-Jan-73 | 1,087 | 173.60 | 0.83 | 0.93 | 2 | 1042.7 | 61.4% | 60.2% | 92.0% | 86.5% | 1,707.6 | 1,974.2 | 40,983 |
| 8797 | 31-Jan-73 | 1,087 | 173.82 | 0.93 | 1.03 | 2 | 1045.7 | 61.5% | 60.4% | 92.0% | 86.5% | 1,712.1 | 1,978.7 | 41,091 |
| 8798 | 01-Feb-73 | 1,087 | 174.01 | 0.89 | 0.99 | 2 | 1044.5 | 61.5% | 60.3% | 92.0% | 86.5% | 1,710.3 | 1,976.9 | 41,047 |
| 8799 | 02-Feb-73 | 1,088 | 174.17 | 0.73 | 0.83 | 2 | 1039.8 | 61.2% | 60.0% | 92.0% | 86.5% | 1,703.1 | 1,969.8 | 40,875 |
| 8800 | 03-Feb-73 | 1,089 | 174.30 | 0.45 | 0.55 | 2 | 1031.4 | 60.7% | 59.5% | 91.9% | 86.4% | 1,690.5 | 1,957.3 | 40,572 |
| 8801 | 04-Feb-73 | 1,090 | 174.43 | 0.32 | 0.42 | 2 | 1027.6 | 60.5% | 59.3% | 91.9% | 86.3% | 1,684.6 | 1,951.5 | 40,431 |
| 8802 | 05-Feb-73 | 1,090 | 174.52 | 0.37 | 0.47 | 2 | 1029.0 | 60.6% | 59.4% | 91.9% | 86.3% | 1,686.9 | 1,953.8 | 40,485 |
| 8803 | 06-Feb-73 | 1,089 | 174.59 | 0.59 | 0.69 | 2 | 1035.6 | 61.0% | 59.8% | 91.9% | 86.4% | 1,696.8 | 1,963.6 | 40,723 |
| 8804 | 07-Feb-73 | 1,088 | 174.63 | 0.69 | 0.79 | 2 | 1038.6 | 61.1% | 59.9% | 92.0% | 86.4% | 1,701.3 | 1,968.0 | 40,831 |
| 8805 | 08-Feb-73 | 1,086 | 174.64 | 0.96 | 1.06 | 2 | 1046.6 | 61.6% | 60.4% | 92.0% | 86.5% | 1,713.5 | 1,980.0 | 41,123 |
| 8806 | 09-Feb-73 | 1,086 | 174.64 | 1.10 | 1.20 | 2 | 1050.8 | 61.8% | 60.6% | 92.0% | 86.6% | 1,719.8 | 1,986.2 | 41,274 |
| 8807 | 10-Feb-73 | 1,086 | 174.65 | 1.08 | 1.18 | 2 | 1050.2 | 61.8% | 60.6% | 92.0% | 86.6% | 1,718.9 | 1,985.3 | 41,253 |
| 8808 | 11-Feb-73 | 1,086 | 174.71 | 1.03 | 1.13 | 2 | 1048.7 | 61.7% | 60.5% | 92.0% | 86.6% | 1,716.6 | 1,983.1 | 41,199 |
| 8809 | 12-Feb-73 | 1,087 | 174.79 | 0.95 | 1.05 | 2 | 1046.3 | 61.6% | 60.4% | 92.0% | 86.5% | 1,713.0 | 1,979.5 | 41,112 |
| 8810 | 13-Feb-73 | 1,086 | 174.87 | 1.01 | 1.11 | 2 | 1048.1 | 61.7% | 60.5% | 92.0% | 86.6% | 1,715.7 | 1,982.2 | 41,177 |
| 8811 | 14-Feb-73 | 1,086 | 174.95 | 1.07 | 1.17 | 2 | 1049.9 | 61.8% | 60.6% | 92.0% | 86.6% | 1,718.4 | 1,984.9 | 41,242 |
| 8812 | 15-Feb-73 | 1,086 | 175.03 | 0.99 | 1.09 | 2 | 1047.5 | 61.7% | 60.5% | 92.0% | 86.5% | 1,714.8 | 1,981.3 | 41,155 |
| 8813 | 16-Feb-73 | 1,088 | 175.11 | 0.77 | 0.87 | 2 | 1040.9 | 61.3% | 60.1% | 92.0% | 86.5% | 1,704.9 | 1,971.6 | 40,918 |
| 8814 | 17-Feb-73 | 1,088 | 175.19 | 0.69 | 0.79 | 2 | 1038.6 | 61.1% | 59.9% | 92.0% | 86.4% | 1,701.3 | 1,968.0 | 40,831 |
| 8815 | 18-Feb-73 | 1,089 | 175.25 | 0.49 | 0.59 | 2 | 1032.6 | 60.8% | 59.6% | 91.9% | 86.4% | 1,692.3 | 1,959.1 | 40,615 |

Little Bayou Meto
Flood Control Pumping Plant
1000-cfs (2 1750-hp)



| | G | H | I | J | K | L | M | N | O | P | Q | R | S | T |
|---|---|---|---|---|---|---|---|---|---|---|---|---|---|---|
| 1 | DATE | Q | h_sump | h_static | h_total | N | Bhp | E_Load | M_Load | M_eff | M_pf | P_In | S_In | W_e |
| 8816 | 19-Feb-73 | 1,089 | 175.30 | 0.44 | 0.54 | 2 | 1031.1 | 60.7% | 59.5% | 91.9% | 86.4% | 1,690.0 | 1,956.9 | 40,561 |
| 8817 | 20-Feb-73 | 1,092 | 175.33 | 0.00 | 0.10 | 2 | 1018.0 | 59.9% | 58.8% | 91.8% | 86.2% | 1,670.2 | 1,937.2 | 40,084 |
| 8818 | 21-Feb-73 | 1,092 | 174.91 | 0.00 | 0.10 | 2 | 1018.0 | 59.9% | 58.8% | 91.8% | 86.2% | 1,670.2 | 1,937.2 | 40,084 |
| 8819 | 22-Feb-73 | 1,092 | 174.08 | 0.00 | 0.10 | 2 | 1018.0 | 59.9% | 58.8% | 91.8% | 86.2% | 1,670.2 | 1,937.2 | 40,084 |
| 8820 | 23-Feb-73 | 1,092 | 172.98 | 0.00 | 0.10 | 2 | 1018.0 | 59.9% | 58.8% | 91.8% | 86.2% | 1,670.2 | 1,937.2 | 40,084 |
| 8821 | 24-Feb-73 | 1,092 | 169.77 | 0.00 | 0.10 | 2 | 1018.0 | 59.9% | 58.8% | 91.8% | 86.2% | 1,670.2 | 1,937.2 | 40,084 |
| 8822 | 25-Feb-73 | 1,092 | 165.67 | 0.00 | 0.10 | 2 | 1018.0 | 59.9% | 58.8% | 91.8% | 86.2% | 1,670.2 | 1,937.2 | 40,084 |
| 8823 | 26-Feb-73 | 0 | 159.02 | | 0.10 | 0 | 0.0 | 0.0% | 0.0% | | | | | |
| 8824 | 27-Feb-73 | 0 | 164.17 | | 0.10 | 0 | 0.0 | 0.0% | 0.0% | | | | | |
| 8825 | 28-Feb-73 | 0 | 166.88 | | 0.10 | 0 | 0.0 | 0.0% | 0.0% | | | | | |
| 8826 | 01-Mar-73 | 546 | 167.31 | 0.00 | 0.10 | 1 | 1018.0 | 59.9% | 58.8% | 91.8% | 86.2% | 835.1 | 968.6 | 20,042 |
| 8827 | 02-Mar-73 | 539 | 165.05 | 2.45 | 2.55 | 1 | 1090.6 | 64.2% | 62.9% | 92.3% | 87.0% | 889.9 | 1,022.4 | 21,357 |
| 8828 | 03-Mar-73 | 0 | 162.65 | | 0.10 | 0 | 0.0 | 0.0% | 0.0% | | | | | |
| 8829 | 04-Mar-73 | 0 | 166.65 | | 0.10 | 0 | 0.0 | 0.0% | 0.0% | | | | | |
| 8830 | 05-Mar-73 | 1,081 | 169.67 | 1.94 | 2.04 | 2 | 1075.7 | 63.3% | 62.1% | 92.2% | 86.9% | 1,757.5 | 2,023.1 | 42,179 |
| 8831 | 06-Mar-73 | 1,052 | 167.52 | 5.95 | 6.05 | 2 | 1191.7 | 70.1% | 68.8% | 93.0% | 88.2% | 1,930.7 | 2,189.5 | 46,337 |
| 8832 | 07-Mar-73 | 1,022 | 165.63 | 9.27 | 9.37 | 2 | 1272.3 | 74.9% | 73.4% | 93.5% | 89.1% | 2,049.3 | 2,300.2 | 49,184 |
| 8833 | 08-Mar-73 | 1,000 | 164.18 | 11.56 | 11.66 | 2 | 1329.4 | 78.2% | 76.7% | 93.8% | 89.6% | 2,135.8 | 2,384.3 | 51,260 |
| 8834 | 09-Mar-73 | 993 | 164.11 | 12.20 | 12.30 | 2 | 1347.3 | 79.3% | 77.8% | 93.8% | 89.7% | 2,163.8 | 2,412.7 | 51,932 |
| 8835 | 10-Mar-73 | 1,008 | 166.43 | 10.84 | 10.94 | 2 | 1309.2 | 77.1% | 75.6% | 93.7% | 89.5% | 2,104.3 | 2,352.3 | 50,504 |
| 8836 | 11-Mar-73 | 1,023 | 168.66 | 9.22 | 9.32 | 2 | 1271.1 | 74.8% | 73.4% | 93.5% | 89.1% | 2,047.6 | 2,298.6 | 49,143 |
| 8837 | 12-Mar-73 | 1,035 | 169.99 | 7.89 | 7.99 | 2 | 1239.8 | 73.0% | 71.6% | 93.3% | 88.7% | 2,001.6 | 2,255.9 | 48,037 |
| 8838 | 13-Mar-73 | 1,041 | 170.85 | 7.27 | 7.37 | 2 | 1225.0 | 72.1% | 70.7% | 93.2% | 88.6% | 1,979.8 | 2,235.6 | 47,516 |
| 8839 | 14-Mar-73 | 1,045 | 171.57 | 6.79 | 6.89 | 2 | 1213.6 | 71.4% | 70.0% | 93.1% | 88.4% | 1,963.0 | 2,219.8 | 47,111 |
| 8840 | 15-Mar-73 | 1,049 | 172.09 | 6.27 | 6.37 | 2 | 1200.9 | 70.7% | 69.3% | 93.0% | 88.3% | 1,944.3 | 2,202.3 | 46,663 |
| 8841 | 16-Mar-73 | 1,052 | 172.33 | 5.91 | 6.01 | 2 | 1190.6 | 70.1% | 68.7% | 93.0% | 88.2% | 1,929.0 | 2,187.9 | 46,296 |
| 8842 | 17-Mar-73 | 1,054 | 172.49 | 5.75 | 5.85 | 2 | 1186.0 | 69.8% | 68.4% | 92.9% | 88.1% | 1,922.2 | 2,181.4 | 46,132 |
| 8843 | 18-Mar-73 | 1,055 | 172.66 | 5.58 | 5.68 | 2 | 1181.1 | 69.5% | 68.2% | 92.9% | 88.1% | 1,914.9 | 2,174.6 | 45,959 |
| 8844 | 19-Mar-73 | 1,057 | 172.87 | 5.37 | 5.47 | 2 | 1175.1 | 69.2% | 67.8% | 92.9% | 88.0% | 1,906.0 | 2,166.1 | 45,744 |
| 8845 | 20-Mar-73 | 1,058 | 173.10 | 5.14 | 5.24 | 2 | 1168.5 | 68.8% | 67.4% | 92.8% | 87.9% | 1,896.2 | 2,156.8 | 45,508 |
| 8846 | 21-Mar-73 | 1,060 | 173.31 | 4.93 | 5.03 | 2 | 1162.4 | 68.4% | 67.1% | 92.8% | 87.8% | 1,887.2 | 2,148.2 | 45,293 |
| 8847 | 22-Mar-73 | 1,062 | 173.49 | 4.75 | 4.85 | 2 | 1157.3 | 68.1% | 66.8% | 92.7% | 87.8% | 1,879.5 | 2,140.9 | 45,109 |
| 8848 | 23-Mar-73 | 1,064 | 173.64 | 4.48 | 4.58 | 2 | 1149.5 | 67.7% | 66.3% | 92.7% | 87.7% | 1,868.0 | 2,129.9 | 44,831 |
| 8849 | 24-Mar-73 | 1,065 | 173.76 | 4.36 | 4.46 | 2 | 1146.1 | 67.5% | 66.1% | 92.7% | 87.7% | 1,862.8 | 2,125.0 | 44,708 |
| 8850 | 25-Mar-73 | 1,065 | 173.85 | 4.27 | 4.37 | 2 | 1143.5 | 67.3% | 66.0% | 92.7% | 87.6% | 1,859.0 | 2,121.3 | 44,616 |
| 8851 | 26-Mar-73 | 1,066 | 173.91 | 4.21 | 4.31 | 2 | 1141.8 | 67.2% | 65.9% | 92.6% | 87.6% | 1,856.4 | 2,118.8 | 44,554 |
| 8852 | 27-Mar-73 | 1,067 | 173.97 | 4.03 | 4.13 | 2 | 1136.6 | 66.9% | 65.6% | 92.6% | 87.6% | 1,848.7 | 2,111.4 | 44,368 |
| 8853 | 28-Mar-73 | 1,067 | 174.08 | 4.04 | 4.14 | 2 | 1136.9 | 66.9% | 65.6% | 92.6% | 87.6% | 1,849.1 | 2,111.8 | 44,378 |
| 8854 | 29-Mar-73 | 1,068 | 174.22 | 3.90 | 4.00 | 2 | 1132.8 | 66.7% | 65.4% | 92.6% | 87.5% | 1,843.0 | 2,106.0 | 44,232 |

Little Bayou Meto
Flood Control Pumping Plant
1000-cfs (2 1750-hp)



| | G | H | I | J | K | L | M | N | O | P | Q | R | S | T |
|---|---|---|---|---|---|---|---|---|---|---|---|---|---|---|
| 1 | DATE | Q | h_sump | h_static | h_total | N | Bhp | E_Load | M_Load | M_eff | M_pf | P_In | S_In | W_e |
| 8855 | 30-Mar-73 | 1,069 | 174.35 | 3.77 | 3.87 | 2 | 1129.0 | 66.4% | 65.2% | 92.6% | 87.5% | 1,837.4 | 2,100.5 | 44,096 |
| 8856 | 31-Mar-73 | 1,070 | 174.47 | 3.53 | 3.63 | 2 | 1122.0 | 66.0% | 64.8% | 92.5% | 87.4% | 1,826.9 | 2,090.5 | 43,846 |
| 8857 | 01-Apr-73 | 1,071 | 174.56 | 3.44 | 3.54 | 2 | 1119.4 | 65.9% | 64.6% | 92.5% | 87.4% | 1,823.0 | 2,086.7 | 43,752 |
| 8858 | 02-Apr-73 | 1,072 | 174.65 | 3.35 | 3.45 | 2 | 1116.8 | 65.7% | 64.5% | 92.5% | 87.3% | 1,819.1 | 2,082.9 | 43,658 |
| 8859 | 03-Apr-73 | 1,072 | 174.75 | 3.25 | 3.35 | 2 | 1113.9 | 65.6% | 64.3% | 92.5% | 87.3% | 1,814.7 | 2,078.7 | 43,553 |
| 8860 | 04-Apr-73 | 1,074 | 174.84 | 3.04 | 3.14 | 2 | 1107.8 | 65.2% | 63.9% | 92.4% | 87.2% | 1,805.6 | 2,069.9 | 43,333 |
| 8861 | 05-Apr-73 | 1,075 | 174.91 | 2.83 | 2.93 | 2 | 1101.6 | 64.8% | 63.6% | 92.4% | 87.2% | 1,796.4 | 2,061.0 | 43,113 |
| 8862 | 06-Apr-73 | 1,076 | 174.98 | 2.77 | 2.87 | 2 | 1099.9 | 64.7% | 63.5% | 92.4% | 87.1% | 1,793.8 | 2,058.4 | 43,051 |
| 8863 | 07-Apr-73 | 1,075 | 175.03 | 2.85 | 2.95 | 2 | 1102.2 | 64.9% | 63.6% | 92.4% | 87.2% | 1,797.3 | 2,061.8 | 43,134 |
| 8864 | 08-Apr-73 | 1,074 | 175.06 | 2.94 | 3.04 | 2 | 1104.8 | 65.0% | 63.8% | 92.4% | 87.2% | 1,801.2 | 2,065.6 | 43,229 |
| 8865 | 09-Apr-73 | 1,075 | 175.07 | 2.81 | 2.91 | 2 | 1101.1 | 64.8% | 63.5% | 92.4% | 87.2% | 1,795.5 | 2,060.1 | 43,092 |
| 8866 | 10-Apr-73 | 1,074 | 175.07 | 2.93 | 3.03 | 2 | 1104.6 | 65.0% | 63.7% | 92.4% | 87.2% | 1,800.8 | 2,065.2 | 43,218 |
| 8867 | 11-Apr-73 | 1,074 | 175.07 | 2.93 | 3.03 | 2 | 1104.6 | 65.0% | 63.7% | 92.4% | 87.2% | 1,800.8 | 2,065.2 | 43,218 |
| 8868 | 12-Apr-73 | 1,074 | 175.08 | 3.04 | 3.14 | 2 | 1107.8 | 65.2% | 63.9% | 92.4% | 87.2% | 1,805.6 | 2,069.9 | 43,333 |
| 8869 | 13-Apr-73 | 1,073 | 175.09 | 3.15 | 3.25 | 2 | 1111.0 | 65.4% | 64.1% | 92.4% | 87.3% | 1,810.4 | 2,074.5 | 43,449 |
| 8870 | 14-Apr-73 | 1,071 | 175.10 | 3.50 | 3.60 | 2 | 1121.1 | 66.0% | 64.7% | 92.5% | 87.4% | 1,825.6 | 2,089.2 | 43,815 |
| 8871 | 15-Apr-73 | 1,067 | 175.09 | 4.04 | 4.14 | 2 | 1136.9 | 66.9% | 65.6% | 92.6% | 87.6% | 1,849.1 | 2,111.8 | 44,378 |
| 8872 | 16-Apr-73 | 1,067 | 175.08 | 4.05 | 4.15 | 2 | 1137.1 | 66.9% | 65.6% | 92.6% | 87.6% | 1,849.5 | 2,112.2 | 44,389 |
| 8873 | 17-Apr-73 | 1,067 | 175.06 | 4.07 | 4.17 | 2 | 1137.7 | 67.0% | 65.7% | 92.6% | 87.6% | 1,850.4 | 2,113.0 | 44,409 |
| 8874 | 18-Apr-73 | 1,064 | 175.04 | 4.45 | 4.55 | 2 | 1148.7 | 67.6% | 66.3% | 92.7% | 87.7% | 1,866.7 | 2,128.7 | 44,801 |
| 8875 | 19-Apr-73 | 1,063 | 175.05 | 4.62 | 4.72 | 2 | 1153.5 | 67.9% | 66.6% | 92.7% | 87.7% | 1,874.0 | 2,135.6 | 44,975 |
| 8876 | 20-Apr-73 | 1,056 | 175.11 | 5.46 | 5.56 | 2 | 1177.7 | 69.3% | 68.0% | 92.9% | 88.0% | 1,909.8 | 2,169.7 | 45,836 |
| 8877 | 21-Apr-73 | 1,045 | 175.24 | 6.78 | 6.88 | 2 | 1213.3 | 71.4% | 70.0% | 93.1% | 88.4% | 1,962.6 | 2,219.5 | 47,102 |
| 8878 | 22-Apr-73 | 1,046 | 175.46 | 6.70 | 6.80 | 2 | 1211.4 | 71.3% | 69.9% | 93.1% | 88.4% | 1,959.8 | 2,216.9 | 47,035 |
| 8879 | 23-Apr-73 | 1,046 | 175.77 | 6.70 | 6.80 | 2 | 1211.4 | 71.3% | 69.9% | 93.1% | 88.4% | 1,959.8 | 2,216.9 | 47,035 |
| 8880 | 24-Apr-73 | 1,042 | 176.10 | 7.17 | 7.27 | 2 | 1222.6 | 72.0% | 70.6% | 93.2% | 88.5% | 1,976.3 | 2,232.4 | 47,431 |
| 8881 | 25-Apr-73 | 1,038 | 176.44 | 7.56 | 7.66 | 2 | 1231.9 | 72.5% | 71.1% | 93.2% | 88.6% | 1,990.0 | 2,245.2 | 47,760 |
| 8882 | 26-Apr-73 | 1,030 | 176.79 | 8.47 | 8.57 | 2 | 1253.6 | 73.8% | 72.3% | 93.4% | 88.9% | 2,021.9 | 2,274.8 | 48,525 |
| 8883 | 27-Apr-73 | 1,026 | 177.15 | 8.86 | 8.96 | 2 | 1262.7 | 74.3% | 72.9% | 93.5% | 89.0% | 2,035.3 | 2,287.2 | 48,847 |
| 8884 | 28-Apr-73 | 1,030 | 177.51 | 8.50 | 8.60 | 2 | 1254.3 | 73.8% | 72.4% | 93.4% | 88.9% | 2,022.9 | 2,275.8 | 48,550 |
| 8885 | 29-Apr-73 | 1,034 | 177.85 | 8.01 | 8.11 | 2 | 1242.6 | 73.1% | 71.7% | 93.3% | 88.8% | 2,005.8 | 2,259.9 | 48,138 |
| 8886 | 30-Apr-73 | 1,045 | 178.16 | 6.80 | 6.90 | 2 | 1213.8 | 71.4% | 70.1% | 93.1% | 88.4% | 1,963.3 | 2,220.2 | 47,119 |
| 8887 | 01-May-73 | 1,052 | 178.43 | 5.93 | 6.03 | 2 | 1191.2 | 70.1% | 68.7% | 93.0% | 88.2% | 1,929.8 | 2,188.7 | 46,316 |
| 8888 | 02-May-73 | 1,056 | 178.67 | 5.45 | 5.55 | 2 | 1177.4 | 69.3% | 68.0% | 92.9% | 88.0% | 1,909.4 | 2,169.3 | 45,826 |
| 8889 | 03-May-73 | 1,075 | 178.87 | 2.87 | 2.97 | 2 | 1102.8 | 64.9% | 63.6% | 92.4% | 87.2% | 1,798.1 | 2,062.7 | 43,155 |
| 8890 | 04-May-73 | 1,071 | 179.03 | 3.44 | 3.54 | 2 | 1119.4 | 65.9% | 64.6% | 92.5% | 87.4% | 1,823.0 | 2,086.7 | 43,752 |
| 8891 | 05-May-73 | 1,071 | 179.16 | 3.47 | 3.57 | 2 | 1120.3 | 65.9% | 64.7% | 92.5% | 87.4% | 1,824.3 | 2,088.0 | 43,783 |
| 8892 | 06-May-73 | 1,071 | 179.28 | 3.51 | 3.61 | 2 | 1121.4 | 66.0% | 64.7% | 92.5% | 87.4% | 1,826.0 | 2,089.6 | 43,825 |
| 8893 | 07-May-73 | 1,072 | 179.37 | 3.26 | 3.36 | 2 | 1114.2 | 65.6% | 64.3% | 92.5% | 87.3% | 1,815.2 | 2,079.1 | 43,564 |

Little Bayou Meto
Flood Control Pumping Plant
1000-cfs (2 1750-hp)



| | G | H | I | J | K | L | M | N | O | P | Q | R | S | T |
|---|---|---|---|---|---|---|---|---|---|---|---|---|---|---|
| 1 | DATE | Q | h_sump | h_static | h_total | N | Bhp | E_Load | M_Load | M_eff | M_pf | P_In | S_In | W_e |
| 8894 | 08-May-73 | 1,075 | 179.44 | 2.86 | 2.96 | 2 | 1102.5 | 64.9% | 63.6% | 92.4% | 87.2% | 1,797.7 | 2,062.3 | 43,145 |
| 8895 | 09-May-73 | 1,074 | 179.50 | 2.97 | 3.07 | 2 | 1105.7 | 65.1% | 63.8% | 92.4% | 87.2% | 1,802.5 | 2,066.9 | 43,260 |
| 8896 | 10-May-73 | 1,072 | 179.53 | 3.26 | 3.36 | 2 | 1114.2 | 65.6% | 64.3% | 92.5% | 87.3% | 1,815.2 | 2,079.1 | 43,564 |
| 8897 | 11-May-73 | 1,069 | 179.56 | 3.71 | 3.81 | 2 | 1127.3 | 66.3% | 65.1% | 92.5% | 87.5% | 1,834.7 | 2,098.0 | 44,034 |
| 8898 | 12-May-73 | 1,076 | 179.57 | 2.74 | 2.84 | 2 | 1099.0 | 64.7% | 63.4% | 92.4% | 87.1% | 1,792.5 | 2,057.2 | 43,019 |
| 8899 | 13-May-73 | 1,080 | 179.58 | 2.16 | 2.26 | 2 | 1082.2 | 63.7% | 62.5% | 92.2% | 86.9% | 1,767.1 | 2,032.5 | 42,410 |
| 8900 | 14-May-73 | 1,080 | 179.57 | 2.03 | 2.13 | 2 | 1078.4 | 63.5% | 62.2% | 92.2% | 86.9% | 1,761.4 | 2,027.0 | 42,274 |
| 8901 | 15-May-73 | 1,079 | 179.57 | 2.31 | 2.41 | 2 | 1086.5 | 63.9% | 62.7% | 92.3% | 87.0% | 1,773.7 | 2,038.9 | 42,568 |
| 8902 | 16-May-73 | 1,076 | 179.55 | 2.76 | 2.86 | 2 | 1099.6 | 64.7% | 63.5% | 92.4% | 87.1% | 1,793.3 | 2,058.0 | 43,040 |
| 8903 | 17-May-73 | 1,073 | 179.53 | 3.10 | 3.20 | 2 | 1109.5 | 65.3% | 64.0% | 92.4% | 87.3% | 1,808.2 | 2,072.4 | 43,396 |
| 8904 | 18-May-73 | 1,072 | 179.51 | 3.28 | 3.38 | 2 | 1114.7 | 65.6% | 64.3% | 92.5% | 87.3% | 1,816.0 | 2,080.0 | 43,585 |
| 8905 | 19-May-73 | 1,078 | 179.48 | 2.40 | 2.50 | 2 | 1089.1 | 64.1% | 62.9% | 92.3% | 87.0% | 1,777.6 | 2,042.7 | 42,662 |
| 8906 | 20-May-73 | 1,084 | 179.44 | 1.31 | 1.41 | 2 | 1057.0 | 62.2% | 61.0% | 92.1% | 86.7% | 1,729.2 | 1,995.5 | 41,501 |
| 8907 | 21-May-73 | 1,085 | 179.41 | 1.16 | 1.26 | 2 | 1052.5 | 61.9% | 60.7% | 92.0% | 86.6% | 1,722.5 | 1,988.8 | 41,339 |
| 8908 | 22-May-73 | 1,087 | 179.37 | 0.84 | 0.94 | 2 | 1043.0 | 61.4% | 60.2% | 92.0% | 86.5% | 1,708.1 | 1,974.7 | 40,993 |
| 8909 | 23-May-73 | 1,089 | 179.35 | 0.50 | 0.60 | 2 | 1032.9 | 60.8% | 59.6% | 91.9% | 86.4% | 1,692.7 | 1,959.5 | 40,626 |
| 8910 | 24-May-73 | 1,091 | 179.34 | 0.15 | 0.25 | 2 | 1022.5 | 60.2% | 59.0% | 91.8% | 86.3% | 1,677.0 | 1,943.9 | 40,247 |
| 8911 | 25-May-73 | 1,092 | 179.27 | 0.00 | 0.10 | 2 | 1018.0 | 59.9% | 58.8% | 91.8% | 86.2% | 1,670.2 | 1,937.2 | 40,084 |
| 8912 | 26-May-73 | 1,092 | 179.13 | 0.00 | 0.10 | 2 | 1018.0 | 59.9% | 58.8% | 91.8% | 86.2% | 1,670.2 | 1,937.2 | 40,084 |
| 8913 | 27-May-73 | 1,092 | 178.99 | 0.00 | 0.10 | 2 | 1018.0 | 59.9% | 58.8% | 91.8% | 86.2% | 1,670.2 | 1,937.2 | 40,084 |
| 8914 | 28-May-73 | 1,092 | 178.79 | 0.00 | 0.10 | 2 | 1018.0 | 59.9% | 58.8% | 91.8% | 86.2% | 1,670.2 | 1,937.2 | 40,084 |
| 8915 | 29-May-73 | 1,092 | 178.58 | 0.00 | 0.10 | 2 | 1018.0 | 59.9% | 58.8% | 91.8% | 86.2% | 1,670.2 | 1,937.2 | 40,084 |
| 8916 | 30-May-73 | 1,092 | 178.33 | 0.00 | 0.10 | 2 | 1018.0 | 59.9% | 58.8% | 91.8% | 86.2% | 1,670.2 | 1,937.2 | 40,084 |
| 8917 | 31-May-73 | 1,092 | 178.04 | 0.00 | 0.10 | 2 | 1018.0 | 59.9% | 58.8% | 91.8% | 86.2% | 1,670.2 | 1,937.2 | 40,084 |
| 8918 | 01-Jun-73 | 1,092 | 177.65 | 0.00 | 0.10 | 2 | 1018.0 | 59.9% | 58.8% | 91.8% | 86.2% | 1,670.2 | 1,937.2 | 40,084 |
| 8919 | 02-Jun-73 | 1,092 | 177.18 | 0.00 | 0.10 | 2 | 1018.0 | 59.9% | 58.8% | 91.8% | 86.2% | 1,670.2 | 1,937.2 | 40,084 |
| 8920 | 03-Jun-73 | 1,092 | 176.69 | 0.00 | 0.10 | 2 | 1018.0 | 59.9% | 58.8% | 91.8% | 86.2% | 1,670.2 | 1,937.2 | 40,084 |
| 8921 | 04-Jun-73 | 1,092 | 176.23 | 0.00 | 0.10 | 2 | 1018.0 | 59.9% | 58.8% | 91.8% | 86.2% | 1,670.2 | 1,937.2 | 40,084 |
| 8922 | 05-Jun-73 | 1,092 | 175.86 | 0.00 | 0.10 | 2 | 1018.0 | 59.9% | 58.8% | 91.8% | 86.2% | 1,670.2 | 1,937.2 | 40,084 |
| 8923 | 06-Jun-73 | 1,085 | 175.85 | 1.25 | 1.35 | 2 | 1055.2 | 62.1% | 60.9% | 92.1% | 86.6% | 1,726.5 | 1,992.8 | 41,436 |
| 8924 | 07-Jun-73 | 1,084 | 175.86 | 1.41 | 1.51 | 2 | 1060.0 | 62.4% | 61.2% | 92.1% | 86.7% | 1,733.7 | 1,999.9 | 41,609 |
| 8925 | 08-Jun-73 | 1,080 | 175.86 | 2.02 | 2.12 | 2 | 1078.1 | 63.5% | 62.2% | 92.2% | 86.9% | 1,761.0 | 2,026.5 | 42,263 |
| 8926 | 09-Jun-73 | 1,051 | 175.85 | 6.03 | 6.13 | 2 | 1194.0 | 70.3% | 68.9% | 93.0% | 88.2% | 1,934.1 | 2,192.7 | 46,418 |
| 8927 | 10-Jun-73 | 1,049 | 175.83 | 6.33 | 6.43 | 2 | 1202.6 | 70.8% | 69.4% | 93.1% | 88.3% | 1,946.8 | 2,204.6 | 46,722 |
| 8928 | 11-Jun-73 | 1,049 | 175.79 | 6.36 | 6.46 | 2 | 1203.3 | 70.8% | 69.4% | 93.1% | 88.3% | 1,947.8 | 2,205.6 | 46,748 |
| 8929 | 12-Jun-73 | 1,084 | 175.75 | 1.36 | 1.46 | 2 | 1058.5 | 62.3% | 61.1% | 92.1% | 86.7% | 1,731.4 | 1,997.7 | 41,555 |
| 8930 | 13-Jun-73 | 1,086 | 175.69 | 1.10 | 1.20 | 2 | 1050.8 | 61.8% | 60.6% | 92.0% | 86.6% | 1,719.8 | 1,986.2 | 41,274 |
| 8931 | 14-Jun-73 | 1,086 | 175.62 | 1.01 | 1.11 | 2 | 1048.1 | 61.7% | 60.5% | 92.0% | 86.6% | 1,715.7 | 1,982.2 | 41,177 |
| 8932 | 15-Jun-73 | 1,086 | 175.55 | 1.08 | 1.18 | 2 | 1050.2 | 61.8% | 60.6% | 92.0% | 86.6% | 1,718.9 | 1,985.3 | 41,253 |

Little Bayou Meto
Flood Control Pumping Plant
1000-cfs (2 1750-hp)



| | G | H | I | J | K | L | M | N | O | P | Q | R | S | T |
|---|---|---|---|---|---|---|---|---|---|---|---|---|---|---|
| 1 | DATE | Q | h_sump | h_static | h_total | N | Bhp | E_Load | M_Load | M_eff | M_pf | P_In | S_In | W_e |
| 8933 | 16-Jun-73 | 1,087 | 175.47 | 0.84 | 0.94 | 2 | 1043.0 | 61.4% | 60.2% | 92.0% | 86.5% | 1,708.1 | 1,974.7 | 40,993 |
| 8934 | 17-Jun-73 | 1,087 | 175.39 | 0.92 | 1.02 | 2 | 1045.4 | 61.5% | 60.3% | 92.0% | 86.5% | 1,711.7 | 1,978.2 | 41,080 |
| 8935 | 18-Jun-73 | 1,088 | 175.30 | 0.71 | 0.81 | 2 | 1039.2 | 61.2% | 60.0% | 92.0% | 86.5% | 1,702.2 | 1,968.9 | 40,853 |
| 8936 | 19-Jun-73 | 1,091 | 175.22 | 0.24 | 0.34 | 2 | 1025.2 | 60.3% | 59.2% | 91.9% | 86.3% | 1,681.0 | 1,947.9 | 40,344 |
| 8937 | 20-Jun-73 | 1,092 | 175.13 | 0.05 | 0.15 | 2 | 1019.5 | 60.0% | 58.8% | 91.8% | 86.2% | 1,672.4 | 1,939.4 | 40,138 |
| 8938 | 21-Jun-73 | 1,092 | 175.06 | 0.00 | 0.10 | 2 | 1018.0 | 59.9% | 58.8% | 91.8% | 86.2% | 1,670.2 | 1,937.2 | 40,084 |
| 8939 | 22-Jun-73 | 1,092 | 174.57 | 0.00 | 0.10 | 2 | 1018.0 | 59.9% | 58.8% | 91.8% | 86.2% | 1,670.2 | 1,937.2 | 40,084 |
| 8940 | 23-Jun-73 | 1,092 | 173.76 | 0.00 | 0.10 | 2 | 1018.0 | 59.9% | 58.8% | 91.8% | 86.2% | 1,670.2 | 1,937.2 | 40,084 |
| 8941 | 24-Jun-73 | 1,092 | 172.66 | 0.00 | 0.10 | 2 | 1018.0 | 59.9% | 58.8% | 91.8% | 86.2% | 1,670.2 | 1,937.2 | 40,084 |
| 8942 | 25-Jun-73 | 1,092 | 171.62 | 0.00 | 0.10 | 2 | 1018.0 | 59.9% | 58.8% | 91.8% | 86.2% | 1,670.2 | 1,937.2 | 40,084 |
| 8943 | 26-Jun-73 | 1,091 | 171.04 | 0.16 | 0.26 | 2 | 1022.8 | 60.2% | 59.0% | 91.8% | 86.3% | 1,677.4 | 1,944.4 | 40,258 |
| 8944 | 27-Jun-73 | 1,089 | 170.04 | 0.47 | 0.57 | 2 | 1032.0 | 60.7% | 59.6% | 91.9% | 86.4% | 1,691.4 | 1,958.2 | 40,593 |
| 8945 | 28-Jun-73 | 1,078 | 167.64 | 2.41 | 2.51 | 2 | 1089.4 | 64.1% | 62.9% | 92.3% | 87.0% | 1,778.0 | 2,043.2 | 42,673 |
| 8946 | 29-Jun-73 | 0 | 162.82 | | 0.10 | 0 | 0.0 | 0.0% | 0.0% | | | | | |
| 8947 | 30-Jun-73 | 540 | 167.47 | 2.12 | 2.22 | 1 | 1081.0 | 63.6% | 62.4% | 92.2% | 86.9% | 882.7 | 1,015.4 | 21,184 |
| 8948 | 01-Jul-73 | 538 | 166.76 | 2.60 | 2.70 | 1 | 1095.0 | 64.4% | 63.2% | 92.3% | 87.1% | 893.2 | 1,025.6 | 21,436 |
| 8949 | 02-Jul-73 | 535 | 165.63 | 3.73 | 3.83 | 1 | 1127.8 | 66.4% | 65.1% | 92.6% | 87.5% | 917.8 | 1,049.4 | 22,027 |
| 8950 | 03-Jul-73 | 533 | 164.27 | 4.04 | 4.14 | 1 | 1136.9 | 66.9% | 65.6% | 92.6% | 87.6% | 924.5 | 1,055.9 | 22,189 |
| 8951 | 04-Jul-73 | 0 | 162.78 | | 0.10 | 0 | 0.0 | 0.0% | 0.0% | | | | | |
| 8952 | 05-Jul-73 | 0 | 166.05 | | 0.10 | 0 | 0.0 | 0.0% | 0.0% | | | | | |
| 8953 | 06-Jul-73 | 0 | 165.35 | | 0.10 | 0 | 0.0 | 0.0% | 0.0% | | | | | |
| 8954 | 07-Jul-73 | 0 | 164.40 | | 0.10 | 0 | 0.0 | 0.0% | 0.0% | | | | | |
| 8955 | 08-Jul-73 | 0 | 163.50 | | 0.10 | 0 | 0.0 | 0.0% | 0.0% | | | | | |
| 8956 | 09-Jul-73 | 0 | 163.42 | | 0.10 | 0 | 0.0 | 0.0% | 0.0% | | | | | |
| 8957 | 10-Jul-73 | 0 | 163.39 | | 0.10 | 0 | 0.0 | 0.0% | 0.0% | | | | | |
| 8958 | 11-Jul-73 | 0 | 163.36 | | 0.10 | 0 | 0.0 | 0.0% | 0.0% | | | | | |
| 8959 | 12-Jul-73 | 0 | 163.35 | | 0.10 | 0 | 0.0 | 0.0% | 0.0% | | | | | |
| 8960 | 13-Jul-73 | 0 | 163.35 | | 0.10 | 0 | 0.0 | 0.0% | 0.0% | | | | | |
| 8961 | 14-Jul-73 | 0 | 163.35 | | 0.10 | 0 | 0.0 | 0.0% | 0.0% | | | | | |
| 8962 | 15-Jul-73 | 0 | 163.35 | | 0.10 | 0 | 0.0 | 0.0% | 0.0% | | | | | |
| 8963 | 16-Jul-73 | 0 | 163.38 | | 0.10 | 0 | 0.0 | 0.0% | 0.0% | | | | | |
| 8964 | 17-Jul-73 | 0 | 163.36 | | 0.10 | 0 | 0.0 | 0.0% | 0.0% | | | | | |
| 8965 | 18-Jul-73 | 0 | 164.00 | | 0.10 | 0 | 0.0 | 0.0% | 0.0% | | | | | |
| 8966 | 19-Jul-73 | 0 | 164.70 | | 0.10 | 0 | 0.0 | 0.0% | 0.0% | | | | | |
| 8967 | 20-Jul-73 | 0 | 165.36 | | 0.10 | 0 | 0.0 | 0.0% | 0.0% | | | | | |
| 8968 | 21-Jul-73 | 0 | 165.94 | | 0.10 | 0 | 0.0 | 0.0% | 0.0% | | | | | |
| 8969 | 22-Jul-73 | 0 | 166.79 | | 0.10 | 0 | 0.0 | 0.0% | 0.0% | | | | | |
| 8970 | 23-Jul-73 | 0 | 166.83 | | 0.10 | 0 | 0.0 | 0.0% | 0.0% | | | | | |
| 8971 | 24-Jul-73 | 0 | 166.83 | | 0.10 | 0 | 0.0 | 0.0% | 0.0% | | | | | |

Little Bayou Meto
Flood Control Pumping Plant
1000-cfs (2 1750-hp)



| | G | H | I | J | K | L | M | N | O | P | Q | R | S | T |
|---|---|---|---|---|---|---|---|---|---|---|---|---|---|---|
| 1 | DATE | Q | h_sump | h_static | h_total | N | Bhp | E_Load | M_Load | M_eff | M_pf | P_In | S_In | W_e |
| 8972 | 25-Jul-73 | 0 | 166.82 | | 0.10 | 0 | 0.0 | 0.0% | 0.0% | | | | | |
| 8973 | 26-Jul-73 | 0 | 166.81 | | 0.10 | 0 | 0.0 | 0.0% | 0.0% | | | | | |
| 8974 | 27-Jul-73 | 0 | 166.80 | | 0.10 | 0 | 0.0 | 0.0% | 0.0% | | | | | |
| 8975 | 28-Jul-73 | 0 | 166.30 | | 0.10 | 0 | 0.0 | 0.0% | 0.0% | | | | | |
| 8976 | 29-Jul-73 | 0 | 166.14 | | 0.10 | 0 | 0.0 | 0.0% | 0.0% | | | | | |
| 8977 | 30-Jul-73 | 0 | 166.14 | | 0.10 | 0 | 0.0 | 0.0% | 0.0% | | | | | |
| 8978 | 31-Jul-73 | 0 | 166.15 | | 0.10 | 0 | 0.0 | 0.0% | 0.0% | | | | | |
| 8979 | 01-Aug-73 | 0 | 166.02 | | 0.10 | 0 | 0.0 | 0.0% | 0.0% | | | | | |
| 8980 | 02-Aug-73 | 0 | 166.15 | | 0.10 | 0 | 0.0 | 0.0% | 0.0% | | | | | |
| 8981 | 03-Aug-73 | 0 | 166.22 | | 0.10 | 0 | 0.0 | 0.0% | 0.0% | | | | | |
| 8982 | 04-Aug-73 | 0 | 166.24 | | 0.10 | 0 | 0.0 | 0.0% | 0.0% | | | | | |
| 8983 | 05-Aug-73 | 0 | 166.17 | | 0.10 | 0 | 0.0 | 0.0% | 0.0% | | | | | |
| 8984 | 06-Aug-73 | 0 | 166.14 | | 0.10 | 0 | 0.0 | 0.0% | 0.0% | | | | | |
| 8985 | 07-Aug-73 | 0 | 166.02 | | 0.10 | 0 | 0.0 | 0.0% | 0.0% | | | | | |
| 8986 | 08-Aug-73 | 0 | 165.89 | | 0.10 | 0 | 0.0 | 0.0% | 0.0% | | | | | |
| 8987 | 09-Aug-73 | 0 | 165.20 | | 0.10 | 0 | 0.0 | 0.0% | 0.0% | | | | | |
| 8988 | 10-Aug-73 | 0 | 165.16 | | 0.10 | 0 | 0.0 | 0.0% | 0.0% | | | | | |
| 8989 | 11-Aug-73 | 0 | 164.89 | | 0.10 | 0 | 0.0 | 0.0% | 0.0% | | | | | |
| 8990 | 12-Aug-73 | 0 | 164.81 | | 0.10 | 0 | 0.0 | 0.0% | 0.0% | | | | | |
| 8991 | 13-Aug-73 | 0 | 164.77 | | 0.10 | 0 | 0.0 | 0.0% | 0.0% | | | | | |
| 8992 | 14-Aug-73 | 0 | 164.76 | | 0.10 | 0 | 0.0 | 0.0% | 0.0% | | | | | |
| 8993 | 15-Aug-73 | 0 | 165.08 | | 0.10 | 0 | 0.0 | 0.0% | 0.0% | | | | | |
| 8994 | 16-Aug-73 | 0 | 165.41 | | 0.10 | 0 | 0.0 | 0.0% | 0.0% | | | | | |
| 8995 | 17-Aug-73 | 0 | 165.65 | | 0.10 | 0 | 0.0 | 0.0% | 0.0% | | | | | |
| 8996 | 18-Aug-73 | 0 | 166.08 | | 0.10 | 0 | 0.0 | 0.0% | 0.0% | | | | | |
| 8997 | 19-Aug-73 | 0 | 166.17 | | 0.10 | 0 | 0.0 | 0.0% | 0.0% | | | | | |
| 8998 | 20-Aug-73 | 0 | 166.14 | | 0.10 | 0 | 0.0 | 0.0% | 0.0% | | | | | |
| 8999 | 21-Aug-73 | 0 | 166.14 | | 0.10 | 0 | 0.0 | 0.0% | 0.0% | | | | | |
| 9000 | 22-Aug-73 | 0 | 165.75 | | 0.10 | 0 | 0.0 | 0.0% | 0.0% | | | | | |
| 9001 | 23-Aug-73 | 0 | 165.05 | | 0.10 | 0 | 0.0 | 0.0% | 0.0% | | | | | |
| 9002 | 24-Aug-73 | 0 | 164.75 | | 0.10 | 0 | 0.0 | 0.0% | 0.0% | | | | | |
| 9003 | 25-Aug-73 | 0 | 163.81 | | 0.10 | 0 | 0.0 | 0.0% | 0.0% | | | | | |
| 9004 | 26-Aug-73 | 0 | 163.62 | | 0.10 | 0 | 0.0 | 0.0% | 0.0% | | | | | |
| 9005 | 27-Aug-73 | 0 | 163.46 | | 0.10 | 0 | 0.0 | 0.0% | 0.0% | | | | | |
| 9006 | 28-Aug-73 | 0 | 163.30 | | 0.10 | 0 | 0.0 | 0.0% | 0.0% | | | | | |
| 9007 | 29-Aug-73 | 0 | 163.18 | | 0.10 | 0 | 0.0 | 0.0% | 0.0% | | | | | |
| 9008 | 30-Aug-73 | 0 | 163.13 | | 0.10 | 0 | 0.0 | 0.0% | 0.0% | | | | | |
| 9009 | 31-Aug-73 | 0 | 163.11 | | 0.10 | 0 | 0.0 | 0.0% | 0.0% | | | | | |
| 9010 | 01-Sep-73 | 0 | 163.10 | | 0.10 | 0 | 0.0 | 0.0% | 0.0% | | | | | |

Little Bayou Meto
Flood Control Pumping Plant
1000-cfs (2 1750-hp)



| | G | H | I | J | K | L | M | N | O | P | Q | R | S | T |
|---|---|---|---|---|---|---|---|---|---|---|---|---|---|---|
| 1 | DATE | Q | h_sump | h_static | h_total | N | Bhp | E_Load | M_Load | M_eff | M_pf | P_In | S_In | W_e |
| 9011 | 02-Sep-73 | 0 | 163.10 | | 0.10 | 0 | 0.0 | 0.0% | 0.0% | | | | | |
| 9012 | 03-Sep-73 | 0 | 163.10 | | 0.10 | 0 | 0.0 | 0.0% | 0.0% | | | | | |
| 9013 | 04-Sep-73 | 0 | 163.10 | | 0.10 | 0 | 0.0 | 0.0% | 0.0% | | | | | |
| 9014 | 05-Sep-73 | 0 | 163.52 | | 0.10 | 0 | 0.0 | 0.0% | 0.0% | | | | | |
| 9015 | 06-Sep-73 | 0 | 164.35 | | 0.10 | 0 | 0.0 | 0.0% | 0.0% | | | | | |
| 9016 | 07-Sep-73 | 0 | 165.04 | | 0.10 | 0 | 0.0 | 0.0% | 0.0% | | | | | |
| 9017 | 08-Sep-73 | 0 | 165.43 | | 0.10 | 0 | 0.0 | 0.0% | 0.0% | | | | | |
| 9018 | 09-Sep-73 | 0 | 165.84 | | 0.10 | 0 | 0.0 | 0.0% | 0.0% | | | | | |
| 9019 | 10-Sep-73 | 0 | 166.04 | | 0.10 | 0 | 0.0 | 0.0% | 0.0% | | | | | |
| 9020 | 11-Sep-73 | 0 | 166.07 | | 0.10 | 0 | 0.0 | 0.0% | 0.0% | | | | | |
| 9021 | 12-Sep-73 | 0 | 166.25 | | 0.10 | 0 | 0.0 | 0.0% | 0.0% | | | | | |
| 9022 | 13-Sep-73 | 0 | 166.26 | | 0.10 | 0 | 0.0 | 0.0% | 0.0% | | | | | |
| 9023 | 14-Sep-73 | 0 | 166.22 | | 0.10 | 0 | 0.0 | 0.0% | 0.0% | | | | | |
| 9024 | 15-Sep-73 | 0 | 166.20 | | 0.10 | 0 | 0.0 | 0.0% | 0.0% | | | | | |
| 9025 | 16-Sep-73 | 0 | 166.51 | | 0.10 | 0 | 0.0 | 0.0% | 0.0% | | | | | |
| 9026 | 17-Sep-73 | 0 | 166.50 | | 0.10 | 0 | 0.0 | 0.0% | 0.0% | | | | | |
| 9027 | 18-Sep-73 | 0 | 166.50 | | 0.10 | 0 | 0.0 | 0.0% | 0.0% | | | | | |
| 9028 | 19-Sep-73 | 0 | 166.37 | | 0.10 | 0 | 0.0 | 0.0% | 0.0% | | | | | |
| 9029 | 20-Sep-73 | 0 | 166.10 | | 0.10 | 0 | 0.0 | 0.0% | 0.0% | | | | | |
| 9030 | 21-Sep-73 | 0 | 165.80 | | 0.10 | 0 | 0.0 | 0.0% | 0.0% | | | | | |
| 9031 | 22-Sep-73 | 0 | 165.45 | | 0.10 | 0 | 0.0 | 0.0% | 0.0% | | | | | |
| 9032 | 23-Sep-73 | 0 | 165.10 | | 0.10 | 0 | 0.0 | 0.0% | 0.0% | | | | | |
| 9033 | 24-Sep-73 | 0 | 164.89 | | 0.10 | 0 | 0.0 | 0.0% | 0.0% | | | | | |
| 9034 | 25-Sep-73 | 0 | 164.81 | | 0.10 | 0 | 0.0 | 0.0% | 0.0% | | | | | |
| 9035 | 26-Sep-73 | 0 | 164.77 | | 0.10 | 0 | 0.0 | 0.0% | 0.0% | | | | | |
| 9036 | 27-Sep-73 | 0 | 165.06 | | 0.10 | 0 | 0.0 | 0.0% | 0.0% | | | | | |
| 9037 | 28-Sep-73 | 0 | 165.12 | | 0.10 | 0 | 0.0 | 0.0% | 0.0% | | | | | |
| 9038 | 29-Sep-73 | 0 | 165.10 | | 0.10 | 0 | 0.0 | 0.0% | 0.0% | | | | | |
| 9039 | 30-Sep-73 | 0 | 165.10 | | 0.10 | 0 | 0.0 | 0.0% | 0.0% | | | | | |
| 9040 | 01-Oct-73 | 0 | 165.10 | | 0.10 | 0 | 0.0 | 0.0% | 0.0% | | | | | |
| 9041 | 02-Oct-73 | 0 | 165.10 | | 0.10 | 0 | 0.0 | 0.0% | 0.0% | | | | | |
| 9042 | 03-Oct-73 | 0 | 165.44 | | 0.10 | 0 | 0.0 | 0.0% | 0.0% | | | | | |
| 9043 | 04-Oct-73 | 0 | 165.49 | | 0.10 | 0 | 0.0 | 0.0% | 0.0% | | | | | |
| 9044 | 05-Oct-73 | 0 | 165.69 | | 0.10 | 0 | 0.0 | 0.0% | 0.0% | | | | | |
| 9045 | 06-Oct-73 | 0 | 165.82 | | 0.10 | 0 | 0.0 | 0.0% | 0.0% | | | | | |
| 9046 | 07-Oct-73 | 0 | 165.81 | | 0.10 | 0 | 0.0 | 0.0% | 0.0% | | | | | |
| 9047 | 08-Oct-73 | 0 | 165.80 | | 0.10 | 0 | 0.0 | 0.0% | 0.0% | | | | | |
| 9048 | 09-Oct-73 | 0 | 166.11 | | 0.10 | 0 | 0.0 | 0.0% | 0.0% | | | | | |
| 9049 | 10-Oct-73 | 0 | 166.15 | | 0.10 | 0 | 0.0 | 0.0% | 0.0% | | | | | |

Little Bayou Meto
Flood Control Pumping Plant
1000-cfs (2 1750-hp)



| | G | H | I | J | K | L | M | N | O | P | Q | R | S | T |
|---|---|---|---|---|---|---|---|---|---|---|---|---|---|---|
| 1 | DATE | Q | h_sump | h_static | h_total | N | Bhp | E_Load | M_Load | M_eff | M_pf | P_In | S_In | W_e |
| 9050 | 11-Oct-73 | 1,089 | 167.53 | 0.51 | 0.61 | 2 | 1033.2 | 60.8% | 59.6% | 91.9% | 86.4% | 1,693.2 | 1,960.0 | 40,637 |
| 9051 | 12-Oct-73 | 0 | 159.01 | | 0.10 | 0 | 0.0 | 0.0% | 0.0% | | | | | |
| 9052 | 13-Oct-73 | 0 | 159.01 | | 0.10 | 0 | 0.0 | 0.0% | 0.0% | | | | | |
| 9053 | 14-Oct-73 | 0 | 159.01 | | 0.10 | 0 | 0.0 | 0.0% | 0.0% | | | | | |
| 9054 | 15-Oct-73 | 0 | 159.01 | | 0.10 | 0 | 0.0 | 0.0% | 0.0% | | | | | |
| 9055 | 16-Oct-73 | 0 | 159.03 | | 0.10 | 0 | 0.0 | 0.0% | 0.0% | | | | | |
| 9056 | 17-Oct-73 | 0 | 166.10 | | 0.10 | 0 | 0.0 | 0.0% | 0.0% | | | | | |
| 9057 | 18-Oct-73 | 1,043 | 170.13 | 6.97 | 7.07 | 2 | 1217.8 | 71.7% | 70.3% | 93.2% | 88.5% | 1,969.3 | 2,225.8 | 47,263 |
| 9058 | 19-Oct-73 | 1,037 | 169.44 | 7.67 | 7.77 | 2 | 1234.5 | 72.7% | 71.2% | 93.3% | 88.7% | 1,993.9 | 2,248.8 | 47,852 |
| 9059 | 20-Oct-73 | 1,033 | 168.95 | 8.16 | 8.26 | 2 | 1246.2 | 73.3% | 71.9% | 93.3% | 88.8% | 2,011.0 | 2,264.7 | 48,264 |
| 9060 | 21-Oct-73 | 1,029 | 168.55 | 8.56 | 8.66 | 2 | 1255.7 | 73.9% | 72.5% | 93.4% | 88.9% | 2,025.0 | 2,277.7 | 48,600 |
| 9061 | 22-Oct-73 | 1,030 | 168.03 | 8.44 | 8.54 | 2 | 1252.9 | 73.7% | 72.3% | 93.4% | 88.9% | 2,020.8 | 2,273.8 | 48,499 |
| 9062 | 23-Oct-73 | 1,024 | 167.08 | 9.08 | 9.18 | 2 | 1267.9 | 74.6% | 73.2% | 93.5% | 89.0% | 2,042.8 | 2,294.2 | 49,028 |
| 9063 | 24-Oct-73 | 1,011 | 165.26 | 10.48 | 10.58 | 2 | 1300.6 | 76.5% | 75.1% | 93.7% | 89.4% | 2,090.8 | 2,338.5 | 50,178 |
| 9064 | 25-Oct-73 | 0 | 162.26 | | 0.10 | 0 | 0.0 | 0.0% | 0.0% | | | | | |
| 9065 | 26-Oct-73 | 1,044 | 168.16 | 6.88 | 6.98 | 2 | 1215.7 | 71.6% | 70.2% | 93.1% | 88.5% | 1,966.1 | 2,222.8 | 47,187 |
| 9066 | 27-Oct-73 | 1,016 | 164.26 | 10.01 | 10.11 | 2 | 1289.6 | 75.9% | 74.4% | 93.6% | 89.3% | 2,074.6 | 2,323.5 | 49,791 |
| 9067 | 28-Oct-73 | 0 | 159.03 | | 0.10 | 0 | 0.0 | 0.0% | 0.0% | | | | | |
| 9068 | 29-Oct-73 | 0 | 164.52 | | 0.10 | 0 | 0.0 | 0.0% | 0.0% | | | | | |
| 9069 | 30-Oct-73 | 536 | 167.36 | 3.38 | 3.48 | 1 | 1117.6 | 65.8% | 64.5% | 92.5% | 87.3% | 910.2 | 1,042.1 | 21,845 |
| 9070 | 31-Oct-73 | 521 | 164.74 | 7.05 | 7.15 | 1 | 1219.7 | 71.8% | 70.4% | 93.2% | 88.5% | 986.0 | 1,114.2 | 23,665 |
| 9071 | 01-Nov-73 | 0 | 161.58 | | 0.10 | 0 | 0.0 | 0.0% | 0.0% | | | | | |
| 9072 | 02-Nov-73 | 0 | 164.69 | | 0.10 | 0 | 0.0 | 0.0% | 0.0% | | | | | |
| 9073 | 03-Nov-73 | 532 | 167.43 | 4.53 | 4.63 | 1 | 1151.0 | 67.7% | 66.4% | 92.7% | 87.7% | 935.1 | 1,066.0 | 22,441 |
| 9074 | 04-Nov-73 | 526 | 166.26 | 6.04 | 6.14 | 1 | 1194.3 | 70.3% | 68.9% | 93.0% | 88.2% | 967.3 | 1,096.5 | 23,214 |
| 9075 | 05-Nov-73 | 521 | 165.20 | 7.10 | 7.20 | 1 | 1220.9 | 71.9% | 70.5% | 93.2% | 88.5% | 986.9 | 1,115.0 | 23,686 |
| 9076 | 06-Nov-73 | 517 | 164.21 | 8.09 | 8.19 | 1 | 1244.5 | 73.2% | 71.8% | 93.3% | 88.8% | 1,004.3 | 1,131.2 | 24,103 |
| 9077 | 07-Nov-73 | 518 | 164.61 | 7.69 | 7.79 | 1 | 1235.0 | 72.7% | 71.3% | 93.3% | 88.7% | 997.3 | 1,124.7 | 23,935 |
| 9078 | 08-Nov-73 | 543 | 167.30 | 1.01 | 1.11 | 1 | 1048.1 | 61.7% | 60.5% | 92.0% | 86.6% | 857.9 | 991.1 | 20,589 |
| 9079 | 09-Nov-73 | 1,088 | 169.59 | 0.69 | 0.79 | 2 | 1038.6 | 61.1% | 59.9% | 92.0% | 86.4% | 1,701.3 | 1,968.0 | 40,831 |
| 9080 | 10-Nov-73 | 1,089 | 169.25 | 0.57 | 0.67 | 2 | 1035.0 | 60.9% | 59.7% | 91.9% | 86.4% | 1,695.9 | 1,962.7 | 40,702 |
| 9081 | 11-Nov-73 | 1,092 | 168.31 | 0.00 | 0.10 | 2 | 1018.0 | 59.9% | 58.8% | 91.8% | 86.2% | 1,670.2 | 1,937.2 | 40,084 |
| 9082 | 12-Nov-73 | 1,091 | 167.93 | 0.11 | 0.21 | 2 | 1021.3 | 60.1% | 58.9% | 91.8% | 86.3% | 1,675.1 | 1,942.1 | 40,203 |
| 9083 | 13-Nov-73 | 1,092 | 163.78 | 0.00 | 0.10 | 2 | 1018.0 | 59.9% | 58.8% | 91.8% | 86.2% | 1,670.2 | 1,937.2 | 40,084 |
| 9084 | 14-Nov-73 | 0 | 161.18 | | 0.10 | 0 | 0.0 | 0.0% | 0.0% | | | | | |
| 9085 | 15-Nov-73 | 0 | 164.40 | | 0.10 | 0 | 0.0 | 0.0% | 0.0% | | | | | |
| 9086 | 16-Nov-73 | 0 | 164.33 | | 0.10 | 0 | 0.0 | 0.0% | 0.0% | | | | | |
| 9087 | 17-Nov-73 | 0 | 164.26 | | 0.10 | 0 | 0.0 | 0.0% | 0.0% | | | | | |
| 9088 | 18-Nov-73 | 0 | 164.20 | | 0.10 | 0 | 0.0 | 0.0% | 0.0% | | | | | |

Little Bayou Meto
Flood Control Pumping Plant
1000-cfs (2 1750-hp)



| | G | H | I | J | K | L | M | N | O | P | Q | R | S | T |
|---|---|---|---|---|---|---|---|---|---|---|---|---|---|---|
| 1 | DATE | Q | h_sump | h_static | h_total | N | Bhp | E_Load | M_Load | M_eff | M_pf | P_In | S_In | W_e |
| 17903 | | Q | Period-of-Record Pumping Station Operating Statistics | | | | | | | | | | | |
| 17904 | DATE | (kcfs) | h_sump | h_static | h_total | N | Bhp | E_Load | M_Load | M_eff | M_pf | P_In | S_In | W_e |
| 17905 | 357.9 | (cfs) | (ft) | (ft) | (ft) | | (hp) | | | | | (kW) | (kVA) | (MWh) |
| 17906 | SUM/COUNT | 5,898.9 | N/A | N/A | N/A | N/A | N/A | N/A | N/A | N/A | N/A | N/A | N/A | 233,453 |
| 17907 | MIN | 0.0 | 159.0 | 0.0 | 0.1 | 0.0 | 0.0 | 0.0% | 0.0% | 91.8% | 86.2% | 835.1 | 968.6 | 20.04 |
| 17908 | AVG | 329.6 | 165.6 | 2.3 | 0.9 | 0.6 | 362.4 | 21.3% | 20.9% | 92.2% | 87.0% | 1,625.8 | 1,867.8 | 39.02 |
| 17909 | MAX | 1,092.0 | 179.6 | 20.1 | 20.2 | 2.0 | 1,488.3 | 87.6% | 85.9% | 94.0% | 90.5% | 2,383.6 | 2,632.9 | 57.21 |
| 17910 | | | | | | | | | | | | | | |
| 17911 | 17897 | = No. of days pumped over POR | | | | | | | | | | | | |
| 17912 | 429528 | = No. of hours pumped over POR | | | | | | | | | | | | |
| 17913 | 50.00 | = Duration of POR in years | | | | | | | | | | | | |
| 17914 | 4.1% | = Days pumped per year as a percentage | | | | | | | | | | | | |

**Cell:** H17904
**Comment:** Total flow (in SUM/COUNT line) over the POR of pump station in 1000's of cfs

**Cell:** G17905
**Comment:** Average number of hours pumped annually over the POR

**Cell:** H17905
**Comment:** Min, avg, and max flows of pump station over the POR in cfs

**Cell:** J17905
**Comment:** Hydraulic static head is the negative of mechanical static head

**Cell:** L17905
**Comment:** Number of pumps operating

**Cell:** M17905
**Comment:** Pump brake hp

**Cell:** N17905
**Comment:** Diesel engine load as a percentage

**Cell:** O17905
**Comment:** Electric motor load as a percentage

**Cell:** P17905
**Comment:** Electric motor efficiency as a function of M_load

**Cell:** Q17905
**Comment:** Electric motor power factor as a function of M_load

**Cell:** R17905
**Comment:** Power demand in kW of pumping station

**Cell:** S17905
**Comment:** Power demand in kVA of pumping plant (accounts for power factor)

Little Bayou Meto
Flood Control Pumping Plant
3000-cfs (3 4000-hp)



| | G | H | I | J | K | L | M | N | O | P | Q | R | S | T |
|---|---|---|---|---|---|---|---|---|---|---|---|---|---|---|
| 1 | DATE | Q | h_sump | h_static | h_total | N | Bhp | E_Load | M_Load | M_eff | M_pf | P_In | S_In | W_e |
| 8704 | 30-Oct-72 | 0 | 164.67 | | 0.10 | 0 | 0.0 | 0.0% | 0.0% | | | | | |
| 8705 | 31-Oct-72 | 0 | 164.77 | | 0.10 | 0 | 0.0 | 0.0% | 0.0% | | | | | |
| 8706 | 01-Nov-72 | 0 | 165.41 | | 0.10 | 0 | 0.0 | 0.0% | 0.0% | | | | | |
| 8707 | 02-Nov-72 | 1,225 | 167.20 | 0.30 | 0.40 | 2 | 1027.0 | 32.1% | 25.9% | 86.5% | 76.0% | 1,788.3 | 2,354.2 | 42,918 |
| 8708 | 03-Nov-72 | 3,633 | 168.22 | 1.60 | 1.70 | 7 | 1065.6 | 33.3% | 26.9% | 86.7% | 76.3% | 6,478.5 | 8,486.4 | 155,484 |
| 8709 | 04-Nov-72 | 0 | 159.05 | | 0.10 | 0 | 0.0 | 0.0% | 0.0% | | | | | |
| 8710 | 05-Nov-72 | 3,642 | 170.92 | 1.21 | 1.31 | 7 | 1054.0 | 32.9% | 26.6% | 86.7% | 76.2% | 6,412.7 | 8,412.7 | 153,906 |
| 8711 | 06-Nov-72 | 0 | 159.01 | | 0.10 | 0 | 0.0 | 0.0% | 0.0% | | | | | |
| 8712 | 07-Nov-72 | 3,676 | 170.74 | 0.23 | 0.33 | 7 | 1024.9 | 32.0% | 25.9% | 86.5% | 75.9% | 6,247.0 | 8,226.2 | 149,929 |
| 8713 | 08-Nov-72 | 0 | 159.03 | | 0.10 | 0 | 0.0 | 0.0% | 0.0% | | | | | |
| 8714 | 09-Nov-72 | 3,684 | 171.01 | 0.00 | 0.10 | 7 | 1018.0 | 31.8% | 25.7% | 86.5% | 75.9% | 6,208.1 | 8,182.1 | 148,993 |
| 8715 | 10-Nov-72 | 3,583 | 167.00 | 3.74 | 3.84 | 7 | 1128.1 | 35.2% | 28.5% | 87.1% | 77.0% | 6,831.1 | 8,877.0 | 163,946 |
| 8716 | 11-Nov-72 | 3,507 | 164.05 | 6.46 | 6.56 | 7 | 1205.7 | 37.6% | 30.4% | 87.5% | 77.7% | 7,264.8 | 9,348.4 | 174,355 |
| 8717 | 12-Nov-72 | 0 | 162.13 | | 0.10 | 0 | 0.0 | 0.0% | 0.0% | | | | | |
| 8718 | 13-Nov-72 | 3,684 | 171.64 | 0.00 | 0.10 | 7 | 1018.0 | 31.8% | 25.7% | 86.5% | 75.9% | 6,208.1 | 8,182.1 | 148,993 |
| 8719 | 14-Nov-72 | 3,684 | 170.88 | 0.00 | 0.10 | 7 | 1018.0 | 31.8% | 25.7% | 86.5% | 75.9% | 6,208.1 | 8,182.1 | 148,993 |
| 8720 | 15-Nov-72 | 3,612 | 168.67 | 2.53 | 2.63 | 7 | 1092.9 | 34.1% | 27.6% | 86.9% | 76.6% | 6,632.8 | 8,658.1 | 159,187 |
| 8721 | 16-Nov-72 | 0 | 162.63 | | 0.10 | 0 | 0.0 | 0.0% | 0.0% | | | | | |
| 8722 | 17-Nov-72 | 3,684 | 172.20 | 0.00 | 0.10 | 7 | 1018.0 | 31.8% | 25.7% | 86.5% | 75.9% | 6,208.1 | 8,182.1 | 148,993 |
| 8723 | 18-Nov-72 | 3,624 | 170.16 | 1.97 | 2.07 | 7 | 1076.6 | 33.6% | 27.2% | 86.8% | 76.4% | 6,540.7 | 8,555.8 | 156,977 |
| 8724 | 19-Nov-72 | 0 | 159.08 | | 0.10 | 0 | 0.0 | 0.0% | 0.0% | | | | | |
| 8725 | 20-Nov-72 | 3,639 | 171.32 | 1.32 | 1.42 | 7 | 1057.3 | 33.0% | 26.7% | 86.7% | 76.3% | 6,431.3 | 8,433.6 | 154,351 |
| 8726 | 21-Nov-72 | 0 | 161.24 | | 0.10 | 0 | 0.0 | 0.0% | 0.0% | | | | | |
| 8727 | 22-Nov-72 | 3,631 | 171.50 | 1.65 | 1.75 | 7 | 1067.1 | 33.3% | 26.9% | 86.7% | 76.4% | 6,486.9 | 8,495.8 | 155,686 |
| 8728 | 23-Nov-72 | 0 | 162.75 | | 0.10 | 0 | 0.0 | 0.0% | 0.0% | | | | | |
| 8729 | 24-Nov-72 | 3,645 | 171.52 | 1.12 | 1.22 | 7 | 1051.4 | 32.8% | 26.5% | 86.6% | 76.2% | 6,397.5 | 8,395.7 | 153,541 |
| 8730 | 25-Nov-72 | 0 | 160.43 | | 0.10 | 0 | 0.0 | 0.0% | 0.0% | | | | | |
| 8731 | 26-Nov-72 | 3,628 | 170.84 | 1.80 | 1.90 | 7 | 1071.6 | 33.4% | 27.1% | 86.8% | 76.4% | 6,512.2 | 8,524.0 | 156,293 |
| 8732 | 27-Nov-72 | 0 | 159.02 | | 0.10 | 0 | 0.0 | 0.0% | 0.0% | | | | | |
| 8733 | 28-Nov-72 | 3,633 | 170.36 | 1.60 | 1.70 | 7 | 1065.6 | 33.3% | 26.9% | 86.7% | 76.3% | 6,478.5 | 8,486.4 | 155,484 |
| 8734 | 29-Nov-72 | 0 | 159.02 | | 0.10 | 0 | 0.0 | 0.0% | 0.0% | | | | | |
| 8735 | 30-Nov-72 | 3,653 | 169.84 | 0.90 | 1.00 | 7 | 1044.8 | 32.6% | 26.4% | 86.6% | 76.1% | 6,360.4 | 8,354.0 | 152,649 |
| 8736 | 01-Dec-72 | 0 | 159.01 | | 0.10 | 0 | 0.0 | 0.0% | 0.0% | | | | | |
| 8737 | 02-Dec-72 | 0 | 159.01 | | 0.10 | 0 | 0.0 | 0.0% | 0.0% | | | | | |
| 8738 | 03-Dec-72 | 0 | 159.01 | | 0.10 | 0 | 0.0 | 0.0% | 0.0% | | | | | |
| 8739 | 04-Dec-72 | 0 | 159.01 | | 0.10 | 0 | 0.0 | 0.0% | 0.0% | | | | | |
| 8740 | 05-Dec-72 | 0 | 159.01 | | 0.10 | 0 | 0.0 | 0.0% | 0.0% | | | | | |
| 8741 | 06-Dec-72 | 0 | 159.01 | | 0.10 | 0 | 0.0 | 0.0% | 0.0% | | | | | |

Little Bayou Meto
Flood Control Pumping Plant
3000-cfs (3 4000-hp)



| | G | H | I | J | K | L | M | N | O | P | Q | R | S | T |
|---|---|---|---|---|---|---|---|---|---|---|---|---|---|---|
| 1 | DATE | Q | h_sump | h_static | h_total | N | Bhp | E_Load | M_Load | M_eff | M_pf | P_In | S_In | W_e |
| 8742 | 07-Dec-72 | 0 | 159.01 | | 0.10 | 0 | 0.0 | 0.0% | 0.0% | | | | | |
| 8743 | 08-Dec-72 | 0 | 159.01 | | 0.10 | 0 | 0.0 | 0.0% | 0.0% | | | | | |
| 8744 | 09-Dec-72 | 0 | 159.01 | | 0.10 | 0 | 0.0 | 0.0% | 0.0% | | | | | |
| 8745 | 10-Dec-72 | 0 | 159.01 | | 0.10 | 0 | 0.0 | 0.0% | 0.0% | | | | | |
| 8746 | 11-Dec-72 | 0 | 159.03 | | 0.10 | 0 | 0.0 | 0.0% | 0.0% | | | | | |
| 8747 | 12-Dec-72 | 3,684 | 169.85 | 0.00 | 0.10 | 7 | 1018.0 | 31.8% | 25.7% | 86.5% | 75.9% | 6,208.1 | 8,182.1 | 148,993 |
| 8748 | 13-Dec-72 | 3,602 | 166.64 | 2.95 | 3.05 | 7 | 1105.1 | 34.5% | 27.9% | 86.9% | 76.7% | 6,701.7 | 8,734.5 | 160,841 |
| 8749 | 14-Dec-72 | 3,625 | 167.64 | 1.94 | 2.04 | 7 | 1075.7 | 33.6% | 27.2% | 86.8% | 76.4% | 6,535.8 | 8,550.3 | 156,858 |
| 8750 | 15-Dec-72 | 3,684 | 169.93 | 0.00 | 0.10 | 7 | 1018.0 | 31.8% | 25.7% | 86.5% | 75.9% | 6,208.1 | 8,182.1 | 148,993 |
| 8751 | 16-Dec-72 | 3,684 | 170.34 | 0.00 | 0.10 | 7 | 1018.0 | 31.8% | 25.7% | 86.5% | 75.9% | 6,208.1 | 8,182.1 | 148,993 |
| 8752 | 17-Dec-72 | 3,684 | 170.62 | 0.00 | 0.10 | 7 | 1018.0 | 31.8% | 25.7% | 86.5% | 75.9% | 6,208.1 | 8,182.1 | 148,993 |
| 8753 | 18-Dec-72 | 3,684 | 170.61 | 0.00 | 0.10 | 7 | 1018.0 | 31.8% | 25.7% | 86.5% | 75.9% | 6,208.1 | 8,182.1 | 148,993 |
| 8754 | 19-Dec-72 | 3,684 | 170.61 | 0.00 | 0.10 | 7 | 1018.0 | 31.8% | 25.7% | 86.5% | 75.9% | 6,208.1 | 8,182.1 | 148,993 |
| 8755 | 20-Dec-72 | 3,680 | 170.85 | 0.12 | 0.22 | 7 | 1021.6 | 31.9% | 25.8% | 86.5% | 75.9% | 6,228.4 | 8,205.1 | 149,482 |
| 8756 | 21-Dec-72 | 3,684 | 170.93 | 0.00 | 0.10 | 7 | 1018.0 | 31.8% | 25.7% | 86.5% | 75.9% | 6,208.1 | 8,182.1 | 148,993 |
| 8757 | 22-Dec-72 | 3,684 | 170.49 | 0.00 | 0.10 | 7 | 1018.0 | 31.8% | 25.7% | 86.5% | 75.9% | 6,208.1 | 8,182.1 | 148,993 |
| 8758 | 23-Dec-72 | 3,645 | 168.47 | 1.11 | 1.21 | 7 | 1051.1 | 32.8% | 26.5% | 86.6% | 76.2% | 6,395.9 | 8,393.8 | 153,500 |
| 8759 | 24-Dec-72 | 0 | 162.18 | | 0.10 | 0 | 0.0 | 0.0% | 0.0% | | | | | |
| 8760 | 25-Dec-72 | 3,684 | 169.88 | 0.00 | 0.10 | 7 | 1018.0 | 31.8% | 25.7% | 86.5% | 75.9% | 6,208.1 | 8,182.1 | 148,993 |
| 8761 | 26-Dec-72 | 0 | 159.54 | | 0.10 | 0 | 0.0 | 0.0% | 0.0% | | | | | |
| 8762 | 27-Dec-72 | 3,684 | 168.79 | 0.00 | 0.10 | 7 | 1018.0 | 31.8% | 25.7% | 86.5% | 75.9% | 6,208.1 | 8,182.1 | 148,993 |
| 8763 | 28-Dec-72 | 0 | 159.05 | | 0.10 | 0 | 0.0 | 0.0% | 0.0% | | | | | |
| 8764 | 29-Dec-72 | 3,684 | 168.43 | 0.00 | 0.10 | 7 | 1018.0 | 31.8% | 25.7% | 86.5% | 75.9% | 6,208.1 | 8,182.1 | 148,993 |
| 8765 | 30-Dec-72 | 0 | 159.01 | | 0.10 | 0 | 0.0 | 0.0% | 0.0% | | | | | |
| 8766 | 31-Dec-72 | 3,684 | 168.33 | 0.00 | 0.10 | 7 | 1018.0 | 31.8% | 25.7% | 86.5% | 75.9% | 6,208.1 | 8,182.1 | 148,993 |
| 8767 | 01-Jan-73 | 0 | 159.01 | | 0.10 | 0 | 0.0 | 0.0% | 0.0% | | | | | |
| 8768 | 02-Jan-73 | 0 | 159.01 | | 0.10 | 0 | 0.0 | 0.0% | 0.0% | | | | | |
| 8769 | 03-Jan-73 | 0 | 159.01 | | 0.10 | 0 | 0.0 | 0.0% | 0.0% | | | | | |
| 8770 | 04-Jan-73 | 0 | 159.01 | | 0.10 | 0 | 0.0 | 0.0% | 0.0% | | | | | |
| 8771 | 05-Jan-73 | 0 | 159.01 | | 0.10 | 0 | 0.0 | 0.0% | 0.0% | | | | | |
| 8772 | 06-Jan-73 | 0 | 159.01 | | 0.10 | 0 | 0.0 | 0.0% | 0.0% | | | | | |
| 8773 | 07-Jan-73 | 0 | 159.01 | | 0.10 | 0 | 0.0 | 0.0% | 0.0% | | | | | |
| 8774 | 08-Jan-73 | 0 | 159.01 | | 0.10 | 0 | 0.0 | 0.0% | 0.0% | | | | | |
| 8775 | 09-Jan-73 | 0 | 159.01 | | 0.10 | 0 | 0.0 | 0.0% | 0.0% | | | | | |
| 8776 | 10-Jan-73 | 0 | 159.01 | | 0.10 | 0 | 0.0 | 0.0% | 0.0% | | | | | |
| 8777 | 11-Jan-73 | 0 | 159.01 | | 0.10 | 0 | 0.0 | 0.0% | 0.0% | | | | | |
| 8778 | 12-Jan-73 | 0 | 159.01 | | 0.10 | 0 | 0.0 | 0.0% | 0.0% | | | | | |
| 8779 | 13-Jan-73 | 0 | 159.01 | | 0.10 | 0 | 0.0 | 0.0% | 0.0% | | | | | |

| | G | H | I | J | K | L | M | N | O | P | Q | R | S | T |
|---|---|---|---|---|---|---|---|---|---|---|---|---|---|---|
| 1 | DATE | Q | h_sump | h_static | h_total | N | Bhp | E_Load | M_Load | M_eff | M_pf | P_In | S_In | W_e |
| 8780 | 14-Jan-73 | 0 | 159.01 | | 0.10 | 0 | 0.0 | 0.0% | 0.0% | | | | | |
| 8781 | 15-Jan-73 | 0 | 159.01 | | 0.10 | 0 | 0.0 | 0.0% | 0.0% | | | | | |
| 8782 | 16-Jan-73 | 0 | 159.01 | | 0.10 | 0 | 0.0 | 0.0% | 0.0% | | | | | |
| 8783 | 17-Jan-73 | 0 | 159.01 | | 0.10 | 0 | 0.0 | 0.0% | 0.0% | | | | | |
| 8784 | 18-Jan-73 | 0 | 159.01 | | 0.10 | 0 | 0.0 | 0.0% | 0.0% | | | | | |
| 8785 | 19-Jan-73 | 0 | 159.01 | | 0.10 | 0 | 0.0 | 0.0% | 0.0% | | | | | |
| 8786 | 20-Jan-73 | 0 | 159.01 | | 0.10 | 0 | 0.0 | 0.0% | 0.0% | | | | | |
| 8787 | 21-Jan-73 | 0 | 159.01 | | 0.10 | 0 | 0.0 | 0.0% | 0.0% | | | | | |
| 8788 | 22-Jan-73 | 0 | 159.01 | | 0.10 | 0 | 0.0 | 0.0% | 0.0% | | | | | |
| 8789 | 23-Jan-73 | 0 | 159.01 | | 0.10 | 0 | 0.0 | 0.0% | 0.0% | | | | | |
| 8790 | 24-Jan-73 | 0 | 159.05 | | 0.10 | 0 | 0.0 | 0.0% | 0.0% | | | | | |
| 8791 | 25-Jan-73 | 3,595 | 171.30 | 3.29 | 3.39 | 7 | 1115.0 | 34.8% | 28.2% | 87.0% | 76.8% | 6,757.4 | 8,796.0 | 162,178 |
| 8792 | 26-Jan-73 | 3,391 | 164.54 | 10.21 | 10.31 | 7 | 1294.3 | 40.4% | 32.7% | 88.0% | 78.6% | 7,754.9 | 9,868.8 | 186,119 |
| 8793 | 27-Jan-73 | 0 | 159.08 | | 0.10 | 0 | 0.0 | 0.0% | 0.0% | | | | | |
| 8794 | 28-Jan-73 | 3,619 | 171.90 | 2.21 | 2.31 | 7 | 1083.6 | 33.8% | 27.4% | 86.8% | 76.5% | 6,580.2 | 8,599.7 | 157,924 |
| 8795 | 29-Jan-73 | 3,567 | 169.80 | 4.31 | 4.41 | 7 | 1144.6 | 35.7% | 28.9% | 87.2% | 77.1% | 6,923.8 | 8,978.6 | 166,170 |
| 8796 | 30-Jan-73 | 0 | 162.32 | | 0.10 | 0 | 0.0 | 0.0% | 0.0% | | | | | |
| 8797 | 31-Jan-73 | 3,609 | 172.11 | 2.64 | 2.74 | 7 | 1096.1 | 34.2% | 27.7% | 86.9% | 76.6% | 6,650.8 | 8,678.2 | 159,620 |
| 8798 | 01-Feb-73 | 3,552 | 170.04 | 4.86 | 4.96 | 7 | 1160.4 | 36.2% | 29.3% | 87.2% | 77.3% | 7,012.2 | 9,075.1 | 168,294 |
| 8799 | 02-Feb-73 | 0 | 159.81 | | 0.10 | 0 | 0.0 | 0.0% | 0.0% | | | | | |
| 8800 | 03-Feb-73 | 3,599 | 171.68 | 3.07 | 3.17 | 7 | 1108.6 | 34.6% | 28.0% | 87.0% | 76.8% | 6,721.4 | 8,756.2 | 161,313 |
| 8801 | 04-Feb-73 | 3,451 | 166.44 | 8.31 | 8.41 | 7 | 1249.8 | 39.0% | 31.6% | 87.7% | 78.1% | 7,509.3 | 9,609.6 | 180,223 |
| 8802 | 05-Feb-73 | 0 | 159.06 | | 0.10 | 0 | 0.0 | 0.0% | 0.0% | | | | | |
| 8803 | 06-Feb-73 | 3,566 | 170.81 | 4.37 | 4.47 | 7 | 1146.4 | 35.8% | 28.9% | 87.2% | 77.1% | 6,933.4 | 8,989.2 | 166,402 |
| 8804 | 07-Feb-73 | 0 | 159.03 | | 0.10 | 0 | 0.0 | 0.0% | 0.0% | | | | | |
| 8805 | 08-Feb-73 | 3,531 | 169.94 | 5.66 | 5.76 | 7 | 1183.4 | 36.9% | 29.9% | 87.4% | 77.5% | 7,140.6 | 9,214.5 | 171,375 |
| 8806 | 09-Feb-73 | 0 | 159.01 | | 0.10 | 0 | 0.0 | 0.0% | 0.0% | | | | | |
| 8807 | 10-Feb-73 | 3,521 | 169.75 | 5.99 | 6.09 | 7 | 1192.9 | 37.2% | 30.1% | 87.4% | 77.6% | 7,193.5 | 9,271.5 | 172,644 |
| 8808 | 11-Feb-73 | 0 | 159.05 | | 0.10 | 0 | 0.0 | 0.0% | 0.0% | | | | | |
| 8809 | 12-Feb-73 | 3,561 | 171.19 | 4.55 | 4.65 | 7 | 1151.5 | 35.9% | 29.1% | 87.2% | 77.2% | 6,962.4 | 9,020.8 | 167,097 |
| 8810 | 13-Feb-73 | 0 | 161.42 | | 0.10 | 0 | 0.0 | 0.0% | 0.0% | | | | | |
| 8811 | 14-Feb-73 | 3,560 | 171.46 | 4.56 | 4.66 | 7 | 1151.8 | 36.0% | 29.1% | 87.2% | 77.2% | 6,964.0 | 9,022.6 | 167,136 |
| 8812 | 15-Feb-73 | 3,298 | 163.22 | 12.80 | 12.90 | 7 | 1364.1 | 42.6% | 34.4% | 88.4% | 79.3% | 8,137.2 | 10,266.0 | 195,292 |
| 8813 | 16-Feb-73 | 0 | 159.05 | | 0.10 | 0 | 0.0 | 0.0% | 0.0% | | | | | |
| 8814 | 17-Feb-73 | 3,559 | 171.25 | 4.63 | 4.73 | 7 | 1153.8 | 36.0% | 29.1% | 87.2% | 77.2% | 6,975.3 | 9,034.8 | 167,406 |
| 8815 | 18-Feb-73 | 0 | 160.99 | | 0.10 | 0 | 0.0 | 0.0% | 0.0% | | | | | |
| 8816 | 19-Feb-73 | 3,558 | 171.09 | 4.65 | 4.75 | 7 | 1154.4 | 36.0% | 29.1% | 87.2% | 77.2% | 6,978.5 | 9,038.3 | 167,483 |
| 8817 | 20-Feb-73 | 0 | 159.05 | | 0.10 | 0 | 0.0 | 0.0% | 0.0% | | | | | |

Little Bayou Meto
Flood Control Pumping Plant
3000-cfs (3 4000-hp)



| | G | H | I | J | K | L | M | N | O | P | Q | R | S | T |
|---|---|---|---|---|---|---|---|---|---|---|---|---|---|---|
| 1 | DATE | Q | h_sump | h_static | h_total | N | Bhp | E_Load | M_Load | M_eff | M_pf | P_In | S_In | W_e |
| 8818 | 21-Feb-73 | 3,599 | 170.23 | 3.08 | 3.18 | 7 | 1108.9 | 34.6% | 28.0% | 87.0% | 76.8% | 6,723.0 | 8,758.0 | 161,352 |
| 8819 | 22-Feb-73 | 0 | 159.01 | | 0.10 | 0 | 0.0 | 0.0% | 0.0% | | | | | |
| 8820 | 23-Feb-73 | 3,599 | 168.52 | 3.10 | 3.20 | 7 | 1109.5 | 34.6% | 28.0% | 87.0% | 76.8% | 6,726.3 | 8,761.6 | 161,431 |
| 8821 | 24-Feb-73 | 0 | 159.01 | | 0.10 | 0 | 0.0 | 0.0% | 0.0% | | | | | |
| 8822 | 25-Feb-73 | 0 | 159.01 | | 0.10 | 0 | 0.0 | 0.0% | 0.0% | | | | | |
| 8823 | 26-Feb-73 | 0 | 159.01 | | 0.10 | 0 | 0.0 | 0.0% | 0.0% | | | | | |
| 8824 | 27-Feb-73 | 0 | 159.01 | | 0.10 | 0 | 0.0 | 0.0% | 0.0% | | | | | |
| 8825 | 28-Feb-73 | 0 | 159.01 | | 0.10 | 0 | 0.0 | 0.0% | 0.0% | | | | | |
| 8826 | 01-Mar-73 | 0 | 159.01 | | 0.10 | 0 | 0.0 | 0.0% | 0.0% | | | | | |
| 8827 | 02-Mar-73 | 0 | 159.01 | | 0.10 | 0 | 0.0 | 0.0% | 0.0% | | | | | |
| 8828 | 03-Mar-73 | 0 | 159.01 | | 0.10 | 0 | 0.0 | 0.0% | 0.0% | | | | | |
| 8829 | 04-Mar-73 | 0 | 159.01 | | 0.10 | 0 | 0.0 | 0.0% | 0.0% | | | | | |
| 8830 | 05-Mar-73 | 0 | 159.01 | | 0.10 | 0 | 0.0 | 0.0% | 0.0% | | | | | |
| 8831 | 06-Mar-73 | 0 | 159.01 | | 0.10 | 0 | 0.0 | 0.0% | 0.0% | | | | | |
| 8832 | 07-Mar-73 | 0 | 159.01 | | 0.10 | 0 | 0.0 | 0.0% | 0.0% | | | | | |
| 8833 | 08-Mar-73 | 0 | 159.01 | | 0.10 | 0 | 0.0 | 0.0% | 0.0% | | | | | |
| 8834 | 09-Mar-73 | 0 | 159.01 | | 0.10 | 0 | 0.0 | 0.0% | 0.0% | | | | | |
| 8835 | 10-Mar-73 | 3,473 | 169.65 | 7.62 | 7.72 | 7 | 1233.3 | 38.5% | 31.1% | 87.7% | 78.0% | 7,418.3 | 9,512.7 | 178,038 |
| 8836 | 11-Mar-73 | 0 | 159.04 | | 0.10 | 0 | 0.0 | 0.0% | 0.0% | | | | | |
| 8837 | 12-Mar-73 | 3,466 | 170.06 | 7.82 | 7.92 | 7 | 1238.1 | 38.6% | 31.3% | 87.7% | 78.0% | 7,444.7 | 9,540.8 | 178,672 |
| 8838 | 13-Mar-73 | 0 | 159.04 | | 0.10 | 0 | 0.0 | 0.0% | 0.0% | | | | | |
| 8839 | 14-Mar-73 | 3,468 | 170.59 | 7.77 | 7.87 | 7 | 1236.9 | 38.6% | 31.2% | 87.7% | 78.0% | 7,438.1 | 9,533.8 | 178,514 |
| 8840 | 15-Mar-73 | 0 | 159.05 | | 0.10 | 0 | 0.0 | 0.0% | 0.0% | | | | | |
| 8841 | 16-Mar-73 | 3,470 | 170.55 | 7.69 | 7.79 | 7 | 1235.0 | 38.5% | 31.2% | 87.7% | 78.0% | 7,427.5 | 9,522.6 | 178,260 |
| 8842 | 17-Mar-73 | 0 | 159.04 | | 0.10 | 0 | 0.0 | 0.0% | 0.0% | | | | | |
| 8843 | 18-Mar-73 | 3,478 | 170.79 | 7.45 | 7.55 | 7 | 1229.3 | 38.4% | 31.0% | 87.6% | 77.9% | 7,395.8 | 9,488.7 | 177,500 |
| 8844 | 19-Mar-73 | 0 | 160.72 | | 0.10 | 0 | 0.0 | 0.0% | 0.0% | | | | | |
| 8845 | 20-Mar-73 | 3,505 | 171.72 | 6.51 | 6.61 | 7 | 1206.9 | 37.7% | 30.5% | 87.5% | 77.7% | 7,271.4 | 9,355.5 | 174,514 |
| 8846 | 21-Mar-73 | 3,391 | 168.05 | 10.19 | 10.29 | 7 | 1293.8 | 40.4% | 32.7% | 88.0% | 78.6% | 7,752.4 | 9,866.1 | 186,057 |
| 8847 | 22-Mar-73 | 0 | 159.03 | | 0.10 | 0 | 0.0 | 0.0% | 0.0% | | | | | |
| 8848 | 23-Mar-73 | 3,498 | 171.35 | 6.77 | 6.87 | 7 | 1213.1 | 37.9% | 30.6% | 87.5% | 77.8% | 7,305.9 | 9,392.5 | 175,341 |
| 8849 | 24-Mar-73 | 0 | 162.50 | | 0.10 | 0 | 0.0 | 0.0% | 0.0% | | | | | |
| 8850 | 25-Mar-73 | 3,496 | 171.30 | 6.82 | 6.92 | 7 | 1214.3 | 37.9% | 30.7% | 87.5% | 77.8% | 7,312.5 | 9,399.6 | 175,500 |
| 8851 | 26-Mar-73 | 0 | 159.04 | | 0.10 | 0 | 0.0 | 0.0% | 0.0% | | | | | |
| 8852 | 27-Mar-73 | 3,476 | 170.49 | 7.52 | 7.62 | 7 | 1230.9 | 38.4% | 31.1% | 87.6% | 78.0% | 7,405.1 | 9,498.6 | 177,721 |
| 8853 | 28-Mar-73 | 0 | 159.01 | | 0.10 | 0 | 0.0 | 0.0% | 0.0% | | | | | |
| 8854 | 29-Mar-73 | 0 | 159.10 | | 0.10 | 0 | 0.0 | 0.0% | 0.0% | | | | | |
| 8855 | 30-Mar-73 | 3,503 | 171.52 | 6.60 | 6.70 | 7 | 1209.0 | 37.7% | 30.5% | 87.5% | 77.7% | 7,283.4 | 9,368.3 | 174,801 |

Little Bayou Meto
Flood Control Pumping Plant
3000-cfs (3 4000-hp)



| | G | H | I | J | K | L | M | N | O | P | Q | R | S | T |
|---|---|---|---|---|---|---|---|---|---|---|---|---|---|---|
| 1 | DATE | Q | h_sump | h_static | h_total | N | Bhp | E_Load | M_Load | M_eff | M_pf | P_In | S_In | W_e |
| 8856 | 31-Mar-73 | 3,307 | 165.43 | 12.57 | 12.67 | 7 | 1357.6 | 42.4% | 34.3% | 88.3% | 79.2% | 8,102.1 | 10,229.8 | 194,450 |
| 8857 | 01-Apr-73 | 0 | 159.06 | | 0.10 | 0 | 0.0 | 0.0% | 0.0% | | | | | |
| 8858 | 02-Apr-73 | 3,497 | 171.20 | 6.80 | 6.90 | 7 | 1213.8 | 37.9% | 30.6% | 87.5% | 77.8% | 7,309.8 | 9,396.7 | 175,436 |
| 8859 | 03-Apr-73 | 0 | 162.74 | | 0.10 | 0 | 0.0 | 0.0% | 0.0% | | | | | |
| 8860 | 04-Apr-73 | 3,515 | 171.71 | 6.17 | 6.27 | 7 | 1198.1 | 37.4% | 30.3% | 87.5% | 77.6% | 7,222.3 | 9,302.6 | 173,335 |
| 8861 | 05-Apr-73 | 3,299 | 164.98 | 12.77 | 12.87 | 7 | 1363.2 | 42.5% | 34.4% | 88.4% | 79.3% | 8,132.6 | 10,261.3 | 195,182 |
| 8862 | 06-Apr-73 | 0 | 159.01 | | 0.10 | 0 | 0.0 | 0.0% | 0.0% | | | | | |
| 8863 | 07-Apr-73 | 3,484 | 170.65 | 7.23 | 7.33 | 7 | 1224.0 | 38.2% | 30.9% | 87.6% | 77.9% | 7,366.7 | 9,457.6 | 176,802 |
| 8864 | 08-Apr-73 | 0 | 159.02 | | 0.10 | 0 | 0.0 | 0.0% | 0.0% | | | | | |
| 8865 | 09-Apr-73 | 3,454 | 169.68 | 8.20 | 8.30 | 7 | 1247.1 | 38.9% | 31.5% | 87.7% | 78.1% | 7,494.8 | 9,594.2 | 179,875 |
| 8866 | 10-Apr-73 | 0 | 159.01 | | 0.10 | 0 | 0.0 | 0.0% | 0.0% | | | | | |
| 8867 | 11-Apr-73 | 3,441 | 169.35 | 8.65 | 8.75 | 7 | 1257.8 | 39.3% | 31.8% | 87.8% | 78.2% | 7,553.8 | 9,656.8 | 181,291 |
| 8868 | 12-Apr-73 | 0 | 159.02 | | 0.10 | 0 | 0.0 | 0.0% | 0.0% | | | | | |
| 8869 | 13-Apr-73 | 3,446 | 169.76 | 8.48 | 8.58 | 7 | 1253.8 | 39.1% | 31.7% | 87.8% | 78.2% | 7,531.7 | 9,633.4 | 180,761 |
| 8870 | 14-Apr-73 | 0 | 159.01 | | 0.10 | 0 | 0.0 | 0.0% | 0.0% | | | | | |
| 8871 | 15-Apr-73 | 0 | 159.01 | | 0.10 | 0 | 0.0 | 0.0% | 0.0% | | | | | |
| 8872 | 16-Apr-73 | 3,381 | 168.64 | 10.49 | 10.59 | 7 | 1300.8 | 40.6% | 32.8% | 88.0% | 78.6% | 7,790.9 | 9,906.6 | 186,983 |
| 8873 | 17-Apr-73 | 0 | 159.01 | | 0.10 | 0 | 0.0 | 0.0% | 0.0% | | | | | |
| 8874 | 18-Apr-73 | 0 | 159.01 | | 0.10 | 0 | 0.0 | 0.0% | 0.0% | | | | | |
| 8875 | 19-Apr-73 | 3,400 | 169.72 | 9.95 | 10.05 | 7 | 1288.2 | 40.2% | 32.5% | 88.0% | 78.5% | 7,721.5 | 9,833.7 | 185,316 |
| 8876 | 20-Apr-73 | 0 | 159.09 | | 0.10 | 0 | 0.0 | 0.0% | 0.0% | | | | | |
| 8877 | 21-Apr-73 | 3,393 | 171.88 | 10.14 | 10.24 | 7 | 1292.6 | 40.3% | 32.6% | 88.0% | 78.6% | 7,745.9 | 9,859.4 | 185,902 |
| 8878 | 22-Apr-73 | 3,391 | 171.96 | 10.20 | 10.30 | 7 | 1294.0 | 40.4% | 32.7% | 88.0% | 78.6% | 7,753.7 | 9,867.5 | 186,088 |
| 8879 | 23-Apr-73 | 3,404 | 172.63 | 9.84 | 9.94 | 7 | 1285.6 | 40.1% | 32.5% | 87.9% | 78.5% | 7,707.3 | 9,818.8 | 184,976 |
| 8880 | 24-Apr-73 | 3,394 | 173.15 | 10.11 | 10.21 | 7 | 1291.9 | 40.3% | 32.6% | 88.0% | 78.6% | 7,742.1 | 9,855.3 | 185,810 |
| 8881 | 25-Apr-73 | 3,386 | 173.67 | 10.33 | 10.43 | 7 | 1297.1 | 40.5% | 32.8% | 88.0% | 78.6% | 7,770.4 | 9,885.0 | 186,489 |
| 8882 | 26-Apr-73 | 3,362 | 174.24 | 11.02 | 11.12 | 7 | 1314.3 | 41.0% | 33.2% | 88.1% | 78.8% | 7,864.8 | 9,983.8 | 188,756 |
| 8883 | 27-Apr-73 | 3,355 | 174.79 | 11.22 | 11.32 | 7 | 1319.9 | 41.2% | 33.3% | 88.1% | 78.8% | 7,895.5 | 10,015.8 | 189,492 |
| 8884 | 28-Apr-73 | 3,372 | 175.28 | 10.73 | 10.83 | 7 | 1306.4 | 40.8% | 33.0% | 88.1% | 78.7% | 7,821.8 | 9,938.8 | 187,723 |
| 8885 | 29-Apr-73 | 3,391 | 175.67 | 10.19 | 10.29 | 7 | 1293.8 | 40.4% | 32.7% | 88.0% | 78.6% | 7,752.4 | 9,866.1 | 186,057 |
| 8886 | 30-Apr-73 | 3,431 | 175.98 | 8.98 | 9.08 | 7 | 1265.5 | 39.5% | 32.0% | 87.8% | 78.3% | 7,596.4 | 9,701.9 | 182,314 |
| 8887 | 01-May-73 | 3,457 | 176.22 | 8.14 | 8.24 | 7 | 1245.7 | 38.9% | 31.5% | 87.7% | 78.1% | 7,486.9 | 9,585.8 | 179,685 |
| 8888 | 02-May-73 | 3,470 | 176.40 | 7.72 | 7.82 | 7 | 1235.7 | 38.6% | 31.2% | 87.7% | 78.0% | 7,431.5 | 9,526.8 | 178,355 |
| 8889 | 03-May-73 | 3,543 | 176.53 | 5.21 | 5.31 | 7 | 1170.5 | 36.5% | 29.6% | 87.3% | 77.4% | 7,068.5 | 9,136.2 | 169,643 |
| 8890 | 04-May-73 | 3,524 | 176.60 | 5.87 | 5.97 | 7 | 1189.4 | 37.1% | 30.0% | 87.4% | 77.6% | 7,174.3 | 9,250.8 | 172,183 |
| 8891 | 05-May-73 | 3,521 | 176.64 | 5.99 | 6.09 | 7 | 1192.9 | 37.2% | 30.1% | 87.4% | 77.6% | 7,193.5 | 9,271.5 | 172,644 |
| 8892 | 06-May-73 | 3,516 | 176.66 | 6.13 | 6.23 | 7 | 1196.9 | 37.4% | 30.2% | 87.4% | 77.6% | 7,215.9 | 9,295.7 | 173,181 |
| 8893 | 07-May-73 | 3,521 | 176.65 | 5.99 | 6.09 | 7 | 1192.9 | 37.2% | 30.1% | 87.4% | 77.6% | 7,193.5 | 9,271.5 | 172,644 |

Little Bayou Meto
Flood Control Pumping Plant
3000-cfs (3 4000-hp)



| | G | H | I | J | K | L | M | N | O | P | Q | R | S | T |
|---|---|---|---|---|---|---|---|---|---|---|---|---|---|---|
| 1 | DATE | Q | h_sump | h_static | h_total | N | Bhp | E_Load | M_Load | M_eff | M_pf | P_In | S_In | W_e |
| 8894 | 08-May-73 | 3,529 | 176.60 | 5.71 | 5.81 | 7 | 1184.8 | 37.0% | 29.9% | 87.4% | 77.5% | 7,148.6 | 9,223.1 | 171,567 |
| 8895 | 09-May-73 | 3,522 | 176.53 | 5.94 | 6.04 | 7 | 1191.4 | 37.2% | 30.1% | 87.4% | 77.6% | 7,185.5 | 9,262.9 | 172,452 |
| 8896 | 10-May-73 | 3,510 | 176.44 | 6.35 | 6.45 | 7 | 1203.1 | 37.6% | 30.4% | 87.5% | 77.7% | 7,250.2 | 9,332.7 | 174,005 |
| 8897 | 11-May-73 | 3,492 | 176.32 | 6.95 | 7.05 | 7 | 1217.4 | 38.0% | 30.7% | 87.6% | 77.8% | 7,329.7 | 9,418.0 | 175,913 |
| 8898 | 12-May-73 | 3,517 | 176.19 | 6.12 | 6.22 | 7 | 1196.6 | 37.3% | 30.2% | 87.4% | 77.6% | 7,214.3 | 9,294.0 | 173,143 |
| 8899 | 13-May-73 | 3,529 | 176.03 | 5.71 | 5.81 | 7 | 1184.8 | 37.0% | 29.9% | 87.4% | 77.5% | 7,148.6 | 9,223.1 | 171,567 |
| 8900 | 14-May-73 | 3,528 | 175.85 | 5.75 | 5.85 | 7 | 1186.0 | 37.0% | 29.9% | 87.4% | 77.5% | 7,155.1 | 9,230.0 | 171,721 |
| 8901 | 15-May-73 | 3,514 | 175.65 | 6.23 | 6.33 | 7 | 1199.8 | 37.4% | 30.3% | 87.5% | 77.7% | 7,231.9 | 9,312.9 | 173,565 |
| 8902 | 16-May-73 | 3,494 | 175.42 | 6.89 | 6.99 | 7 | 1215.9 | 38.0% | 30.7% | 87.6% | 77.8% | 7,321.8 | 9,409.5 | 175,722 |
| 8903 | 17-May-73 | 3,477 | 175.16 | 7.47 | 7.57 | 7 | 1229.7 | 38.4% | 31.1% | 87.6% | 77.9% | 7,398.5 | 9,491.5 | 177,563 |
| 8904 | 18-May-73 | 3,462 | 174.84 | 7.95 | 8.05 | 7 | 1241.2 | 38.7% | 31.3% | 87.7% | 78.1% | 7,461.8 | 9,559.1 | 179,084 |
| 8905 | 19-May-73 | 3,479 | 174.48 | 7.40 | 7.50 | 7 | 1228.1 | 38.3% | 31.0% | 87.6% | 77.9% | 7,389.2 | 9,481.7 | 177,341 |
| 8906 | 20-May-73 | 3,499 | 174.04 | 6.71 | 6.81 | 7 | 1211.6 | 37.8% | 30.6% | 87.5% | 77.8% | 7,297.9 | 9,383.9 | 175,150 |
| 8907 | 21-May-73 | 3,489 | 173.51 | 7.06 | 7.16 | 7 | 1220.0 | 38.1% | 30.8% | 87.6% | 77.9% | 7,344.3 | 9,433.6 | 176,262 |
| 8908 | 22-May-73 | 3,482 | 172.91 | 7.30 | 7.40 | 7 | 1225.7 | 38.3% | 30.9% | 87.6% | 77.9% | 7,376.0 | 9,467.5 | 177,024 |
| 8909 | 23-May-73 | 3,446 | 171.38 | 8.47 | 8.57 | 7 | 1253.6 | 39.1% | 31.7% | 87.8% | 78.2% | 7,530.4 | 9,632.0 | 180,729 |
| 8910 | 24-May-73 | 0 | 159.01 | | 0.10 | 0 | 0.0 | 0.0% | 0.0% | | | | | |
| 8911 | 25-May-73 | 0 | 159.01 | | 0.10 | 0 | 0.0 | 0.0% | 0.0% | | | | | |
| 8912 | 26-May-73 | 0 | 159.01 | | 0.10 | 0 | 0.0 | 0.0% | 0.0% | | | | | |
| 8913 | 27-May-73 | 0 | 159.03 | | 0.10 | 0 | 0.0 | 0.0% | 0.0% | | | | | |
| 8914 | 28-May-73 | 3,470 | 170.18 | 7.70 | 7.80 | 7 | 1235.2 | 38.6% | 31.2% | 87.7% | 78.0% | 7,428.8 | 9,524.0 | 178,292 |
| 8915 | 29-May-73 | 0 | 159.05 | | 0.10 | 0 | 0.0 | 0.0% | 0.0% | | | | | |
| 8916 | 30-May-73 | 3,530 | 171.27 | 5.68 | 5.78 | 7 | 1184.0 | 37.0% | 29.9% | 87.4% | 77.5% | 7,143.8 | 9,217.9 | 171,452 |
| 8917 | 31-May-73 | 3,334 | 164.35 | 11.81 | 11.91 | 7 | 1336.4 | 41.7% | 33.7% | 88.2% | 79.0% | 7,985.9 | 10,109.7 | 191,662 |
| 8918 | 01-Jun-73 | 0 | 159.08 | | 0.10 | 0 | 0.0 | 0.0% | 0.0% | | | | | |
| 8919 | 02-Jun-73 | 3,662 | 171.50 | 0.63 | 0.73 | 7 | 1036.8 | 32.4% | 26.2% | 86.6% | 76.1% | 6,314.7 | 8,302.6 | 151,554 |
| 8920 | 03-Jun-73 | 3,359 | 163.31 | 11.12 | 11.22 | 7 | 1317.1 | 41.1% | 33.3% | 88.1% | 78.8% | 7,880.2 | 9,999.8 | 189,124 |
| 8921 | 04-Jun-73 | 0 | 159.04 | | 0.10 | 0 | 0.0 | 0.0% | 0.0% | | | | | |
| 8922 | 05-Jun-73 | 3,558 | 170.66 | 4.66 | 4.76 | 7 | 1154.7 | 36.0% | 29.2% | 87.2% | 77.2% | 6,980.1 | 9,040.1 | 167,522 |
| 8923 | 06-Jun-73 | 0 | 159.05 | | 0.10 | 0 | 0.0 | 0.0% | 0.0% | | | | | |
| 8924 | 07-Jun-73 | 3,478 | 169.82 | 7.44 | 7.54 | 7 | 1229.0 | 38.4% | 31.0% | 87.6% | 77.9% | 7,394.5 | 9,487.3 | 177,468 |
| 8925 | 08-Jun-73 | 0 | 159.01 | | 0.10 | 0 | 0.0 | 0.0% | 0.0% | | | | | |
| 8926 | 09-Jun-73 | 3,283 | 168.67 | 13.21 | 13.31 | 7 | 1374.7 | 42.9% | 34.7% | 88.4% | 79.4% | 8,195.3 | 10,325.7 | 196,688 |
| 8927 | 10-Jun-73 | 0 | 159.01 | | 0.10 | 0 | 0.0 | 0.0% | 0.0% | | | | | |
| 8928 | 11-Jun-73 | 0 | 159.01 | | 0.10 | 0 | 0.0 | 0.0% | 0.0% | | | | | |
| 8929 | 12-Jun-73 | 0 | 159.01 | | 0.10 | 0 | 0.0 | 0.0% | 0.0% | | | | | |
| 8930 | 13-Jun-73 | 0 | 159.01 | | 0.10 | 0 | 0.0 | 0.0% | 0.0% | | | | | |
| 8931 | 14-Jun-73 | 0 | 159.01 | | 0.10 | 0 | 0.0 | 0.0% | 0.0% | | | | | |

Little Bayou Meto
Flood Control Pumping Plant
3000-cfs (3 4000-hp)



| | G | H | I | J | K | L | M | N | O | P | Q | R | S | T |
|---|---|---|---|---|---|---|---|---|---|---|---|---|---|---|
| 1 | DATE | Q | h_sump | h_static | h_total | N | Bhp | E_Load | M_Load | M_eff | M_pf | P_In | S_In | W_e |
| 8932 | 15-Jun-73 | 0 | 159.01 | | 0.10 | 0 | 0.0 | 0.0% | 0.0% | | | | | |
| 8933 | 16-Jun-73 | 0 | 159.01 | | 0.10 | 0 | 0.0 | 0.0% | 0.0% | | | | | |
| 8934 | 17-Jun-73 | 0 | 159.01 | | 0.10 | 0 | 0.0 | 0.0% | 0.0% | | | | | |
| 8935 | 18-Jun-73 | 0 | 159.01 | | 0.10 | 0 | 0.0 | 0.0% | 0.0% | | | | | |
| 8936 | 19-Jun-73 | 0 | 159.01 | | 0.10 | 0 | 0.0 | 0.0% | 0.0% | | | | | |
| 8937 | 20-Jun-73 | 0 | 159.01 | | 0.10 | 0 | 0.0 | 0.0% | 0.0% | | | | | |
| 8938 | 21-Jun-73 | 0 | 159.01 | | 0.10 | 0 | 0.0 | 0.0% | 0.0% | | | | | |
| 8939 | 22-Jun-73 | 0 | 159.01 | | 0.10 | 0 | 0.0 | 0.0% | 0.0% | | | | | |
| 8940 | 23-Jun-73 | 0 | 159.01 | | 0.10 | 0 | 0.0 | 0.0% | 0.0% | | | | | |
| 8941 | 24-Jun-73 | 0 | 159.01 | | 0.10 | 0 | 0.0 | 0.0% | 0.0% | | | | | |
| 8942 | 25-Jun-73 | 0 | 159.01 | | 0.10 | 0 | 0.0 | 0.0% | 0.0% | | | | | |
| 8943 | 26-Jun-73 | 0 | 159.01 | | 0.10 | 0 | 0.0 | 0.0% | 0.0% | | | | | |
| 8944 | 27-Jun-73 | 0 | 159.01 | | 0.10 | 0 | 0.0 | 0.0% | 0.0% | | | | | |
| 8945 | 28-Jun-73 | 0 | 159.01 | | 0.10 | 0 | 0.0 | 0.0% | 0.0% | | | | | |
| 8946 | 29-Jun-73 | 0 | 159.01 | | 0.10 | 0 | 0.0 | 0.0% | 0.0% | | | | | |
| 8947 | 30-Jun-73 | 0 | 159.01 | | 0.10 | 0 | 0.0 | 0.0% | 0.0% | | | | | |
| 8948 | 01-Jul-73 | 0 | 159.01 | | 0.10 | 0 | 0.0 | 0.0% | 0.0% | | | | | |
| 8949 | 02-Jul-73 | 0 | 159.01 | | 0.10 | 0 | 0.0 | 0.0% | 0.0% | | | | | |
| 8950 | 03-Jul-73 | 0 | 159.01 | | 0.10 | 0 | 0.0 | 0.0% | 0.0% | | | | | |
| 8951 | 04-Jul-73 | 0 | 159.01 | | 0.10 | 0 | 0.0 | 0.0% | 0.0% | | | | | |
| 8952 | 05-Jul-73 | 0 | 159.01 | | 0.10 | 0 | 0.0 | 0.0% | 0.0% | | | | | |
| 8953 | 06-Jul-73 | 0 | 159.01 | | 0.10 | 0 | 0.0 | 0.0% | 0.0% | | | | | |
| 8954 | 07-Jul-73 | 0 | 159.01 | | 0.10 | 0 | 0.0 | 0.0% | 0.0% | | | | | |
| 8955 | 08-Jul-73 | 0 | 159.01 | | 0.10 | 0 | 0.0 | 0.0% | 0.0% | | | | | |
| 8956 | 09-Jul-73 | 0 | 159.01 | | 0.10 | 0 | 0.0 | 0.0% | 0.0% | | | | | |
| 8957 | 10-Jul-73 | 0 | 159.01 | | 0.10 | 0 | 0.0 | 0.0% | 0.0% | | | | | |
| 8958 | 11-Jul-73 | 0 | 159.01 | | 0.10 | 0 | 0.0 | 0.0% | 0.0% | | | | | |
| 8959 | 12-Jul-73 | 0 | 159.01 | | 0.10 | 0 | 0.0 | 0.0% | 0.0% | | | | | |
| 8960 | 13-Jul-73 | 0 | 159.01 | | 0.10 | 0 | 0.0 | 0.0% | 0.0% | | | | | |
| 8961 | 14-Jul-73 | 0 | 159.01 | | 0.10 | 0 | 0.0 | 0.0% | 0.0% | | | | | |
| 8962 | 15-Jul-73 | 0 | 159.01 | | 0.10 | 0 | 0.0 | 0.0% | 0.0% | | | | | |
| 8963 | 16-Jul-73 | 0 | 159.01 | | 0.10 | 0 | 0.0 | 0.0% | 0.0% | | | | | |
| 8964 | 17-Jul-73 | 0 | 159.01 | | 0.10 | 0 | 0.0 | 0.0% | 0.0% | | | | | |
| 8965 | 18-Jul-73 | 0 | 159.01 | | 0.10 | 0 | 0.0 | 0.0% | 0.0% | | | | | |
| 8966 | 19-Jul-73 | 0 | 159.01 | | 0.10 | 0 | 0.0 | 0.0% | 0.0% | | | | | |
| 8967 | 20-Jul-73 | 0 | 159.01 | | 0.10 | 0 | 0.0 | 0.0% | 0.0% | | | | | |
| 8968 | 21-Jul-73 | 0 | 159.01 | | 0.10 | 0 | 0.0 | 0.0% | 0.0% | | | | | |
| 8969 | 22-Jul-73 | 0 | 159.01 | | 0.10 | 0 | 0.0 | 0.0% | 0.0% | | | | | |

Little Bayou Meto
Flood Control Pumping Plant
3000-cfs (3 4000-hp)



| | G | H | I | J | K | L | M | N | O | P | Q | R | S | T |
|---|---|---|---|---|---|---|---|---|---|---|---|---|---|---|
| 1 | DATE | Q | h_sump | h_static | h_total | N | Bhp | E_Load | M_Load | M_eff | M_pf | P_In | S_In | W_e |
| 8970 | 23-Jul-73 | 0 | 159.01 | | 0.10 | 0 | 0.0 | 0.0% | 0.0% | | | | | |
| 8971 | 24-Jul-73 | 0 | 159.01 | | 0.10 | 0 | 0.0 | 0.0% | 0.0% | | | | | |
| 8972 | 25-Jul-73 | 0 | 159.01 | | 0.10 | 0 | 0.0 | 0.0% | 0.0% | | | | | |
| 8973 | 26-Jul-73 | 0 | 159.01 | | 0.10 | 0 | 0.0 | 0.0% | 0.0% | | | | | |
| 8974 | 27-Jul-73 | 0 | 159.01 | | 0.10 | 0 | 0.0 | 0.0% | 0.0% | | | | | |
| 8975 | 28-Jul-73 | 0 | 159.01 | | 0.10 | 0 | 0.0 | 0.0% | 0.0% | | | | | |
| 8976 | 29-Jul-73 | 0 | 159.01 | | 0.10 | 0 | 0.0 | 0.0% | 0.0% | | | | | |
| 8977 | 30-Jul-73 | 0 | 159.01 | | 0.10 | 0 | 0.0 | 0.0% | 0.0% | | | | | |
| 8978 | 31-Jul-73 | 0 | 159.01 | | 0.10 | 0 | 0.0 | 0.0% | 0.0% | | | | | |
| 8979 | 01-Aug-73 | 0 | 159.01 | | 0.10 | 0 | 0.0 | 0.0% | 0.0% | | | | | |
| 8980 | 02-Aug-73 | 0 | 159.01 | | 0.10 | 0 | 0.0 | 0.0% | 0.0% | | | | | |
| 8981 | 03-Aug-73 | 0 | 159.01 | | 0.10 | 0 | 0.0 | 0.0% | 0.0% | | | | | |
| 8982 | 04-Aug-73 | 0 | 159.01 | | 0.10 | 0 | 0.0 | 0.0% | 0.0% | | | | | |
| 8983 | 05-Aug-73 | 0 | 159.01 | | 0.10 | 0 | 0.0 | 0.0% | 0.0% | | | | | |
| 8984 | 06-Aug-73 | 0 | 159.01 | | 0.10 | 0 | 0.0 | 0.0% | 0.0% | | | | | |
| 8985 | 07-Aug-73 | 0 | 159.01 | | 0.10 | 0 | 0.0 | 0.0% | 0.0% | | | | | |
| 8986 | 08-Aug-73 | 0 | 159.01 | | 0.10 | 0 | 0.0 | 0.0% | 0.0% | | | | | |
| 8987 | 09-Aug-73 | 0 | 159.01 | | 0.10 | 0 | 0.0 | 0.0% | 0.0% | | | | | |
| 8988 | 10-Aug-73 | 0 | 159.01 | | 0.10 | 0 | 0.0 | 0.0% | 0.0% | | | | | |
| 8989 | 11-Aug-73 | 0 | 159.01 | | 0.10 | 0 | 0.0 | 0.0% | 0.0% | | | | | |
| 8990 | 12-Aug-73 | 0 | 159.01 | | 0.10 | 0 | 0.0 | 0.0% | 0.0% | | | | | |
| 8991 | 13-Aug-73 | 0 | 159.01 | | 0.10 | 0 | 0.0 | 0.0% | 0.0% | | | | | |
| 8992 | 14-Aug-73 | 0 | 159.01 | | 0.10 | 0 | 0.0 | 0.0% | 0.0% | | | | | |
| 8993 | 15-Aug-73 | 0 | 159.01 | | 0.10 | 0 | 0.0 | 0.0% | 0.0% | | | | | |
| 8994 | 16-Aug-73 | 0 | 159.01 | | 0.10 | 0 | 0.0 | 0.0% | 0.0% | | | | | |
| 8995 | 17-Aug-73 | 0 | 159.01 | | 0.10 | 0 | 0.0 | 0.0% | 0.0% | | | | | |
| 8996 | 18-Aug-73 | 0 | 159.01 | | 0.10 | 0 | 0.0 | 0.0% | 0.0% | | | | | |
| 8997 | 19-Aug-73 | 0 | 159.01 | | 0.10 | 0 | 0.0 | 0.0% | 0.0% | | | | | |
| 8998 | 20-Aug-73 | 0 | 159.01 | | 0.10 | 0 | 0.0 | 0.0% | 0.0% | | | | | |
| 8999 | 21-Aug-73 | 0 | 159.01 | | 0.10 | 0 | 0.0 | 0.0% | 0.0% | | | | | |
| 9000 | 22-Aug-73 | 0 | 159.01 | | 0.10 | 0 | 0.0 | 0.0% | 0.0% | | | | | |
| 9001 | 23-Aug-73 | 0 | 159.01 | | 0.10 | 0 | 0.0 | 0.0% | 0.0% | | | | | |
| 9002 | 24-Aug-73 | 0 | 159.01 | | 0.10 | 0 | 0.0 | 0.0% | 0.0% | | | | | |
| 9003 | 25-Aug-73 | 0 | 159.01 | | 0.10 | 0 | 0.0 | 0.0% | 0.0% | | | | | |
| 9004 | 26-Aug-73 | 0 | 159.01 | | 0.10 | 0 | 0.0 | 0.0% | 0.0% | | | | | |
| 9005 | 27-Aug-73 | 0 | 159.01 | | 0.10 | 0 | 0.0 | 0.0% | 0.0% | | | | | |
| 9006 | 28-Aug-73 | 0 | 159.01 | | 0.10 | 0 | 0.0 | 0.0% | 0.0% | | | | | |
| 9007 | 29-Aug-73 | 0 | 159.01 | | 0.10 | 0 | 0.0 | 0.0% | 0.0% | | | | | |

Little Bayou Meto
Flood Control Pumping Plant
3000-cfs (3 4000-hp)



| | G | H | I | J | K | L | M | N | O | P | Q | R | S | T |
|---|---|---|---|---|---|---|---|---|---|---|---|---|---|---|
| 1 | DATE | Q | h_sump | h_static | h_total | N | Bhp | E_Load | M_Load | M_eff | M_pf | P_In | S_In | W_e |
| 9008 | 30-Aug-73 | 0 | 159.55 | | 0.10 | 0 | 0.0 | 0.0% | 0.0% | | | | | |
| 9009 | 31-Aug-73 | 0 | 160.54 | | 0.10 | 0 | 0.0 | 0.0% | 0.0% | | | | | |
| 9010 | 01-Sep-73 | 0 | 161.20 | | 0.10 | 0 | 0.0 | 0.0% | 0.0% | | | | | |
| 9011 | 02-Sep-73 | 0 | 161.66 | | 0.10 | 0 | 0.0 | 0.0% | 0.0% | | | | | |
| 9012 | 03-Sep-73 | 0 | 162.00 | | 0.10 | 0 | 0.0 | 0.0% | 0.0% | | | | | |
| 9013 | 04-Sep-73 | 0 | 162.24 | | 0.10 | 0 | 0.0 | 0.0% | 0.0% | | | | | |
| 9014 | 05-Sep-73 | 0 | 162.77 | | 0.10 | 0 | 0.0 | 0.0% | 0.0% | | | | | |
| 9015 | 06-Sep-73 | 0 | 164.04 | | 0.10 | 0 | 0.0 | 0.0% | 0.0% | | | | | |
| 9016 | 07-Sep-73 | 0 | 165.03 | | 0.10 | 0 | 0.0 | 0.0% | 0.0% | | | | | |
| 9017 | 08-Sep-73 | 0 | 165.42 | | 0.10 | 0 | 0.0 | 0.0% | 0.0% | | | | | |
| 9018 | 09-Sep-73 | 0 | 165.84 | | 0.10 | 0 | 0.0 | 0.0% | 0.0% | | | | | |
| 9019 | 10-Sep-73 | 0 | 166.04 | | 0.10 | 0 | 0.0 | 0.0% | 0.0% | | | | | |
| 9020 | 11-Sep-73 | 0 | 166.07 | | 0.10 | 0 | 0.0 | 0.0% | 0.0% | | | | | |
| 9021 | 12-Sep-73 | 0 | 166.25 | | 0.10 | 0 | 0.0 | 0.0% | 0.0% | | | | | |
| 9022 | 13-Sep-73 | 0 | 166.26 | | 0.10 | 0 | 0.0 | 0.0% | 0.0% | | | | | |
| 9023 | 14-Sep-73 | 0 | 166.24 | | 0.10 | 0 | 0.0 | 0.0% | 0.0% | | | | | |
| 9024 | 15-Sep-73 | 0 | 166.21 | | 0.10 | 0 | 0.0 | 0.0% | 0.0% | | | | | |
| 9025 | 16-Sep-73 | 0 | 166.51 | | 0.10 | 0 | 0.0 | 0.0% | 0.0% | | | | | |
| 9026 | 17-Sep-73 | 0 | 166.50 | | 0.10 | 0 | 0.0 | 0.0% | 0.0% | | | | | |
| 9027 | 18-Sep-73 | 0 | 166.50 | | 0.10 | 0 | 0.0 | 0.0% | 0.0% | | | | | |
| 9028 | 19-Sep-73 | 0 | 166.37 | | 0.10 | 0 | 0.0 | 0.0% | 0.0% | | | | | |
| 9029 | 20-Sep-73 | 0 | 166.10 | | 0.10 | 0 | 0.0 | 0.0% | 0.0% | | | | | |
| 9030 | 21-Sep-73 | 0 | 165.80 | | 0.10 | 0 | 0.0 | 0.0% | 0.0% | | | | | |
| 9031 | 22-Sep-73 | 0 | 165.45 | | 0.10 | 0 | 0.0 | 0.0% | 0.0% | | | | | |
| 9032 | 23-Sep-73 | 0 | 165.10 | | 0.10 | 0 | 0.0 | 0.0% | 0.0% | | | | | |
| 9033 | 24-Sep-73 | 0 | 164.89 | | 0.10 | 0 | 0.0 | 0.0% | 0.0% | | | | | |
| 9034 | 25-Sep-73 | 0 | 164.81 | | 0.10 | 0 | 0.0 | 0.0% | 0.0% | | | | | |
| 9035 | 26-Sep-73 | 0 | 164.77 | | 0.10 | 0 | 0.0 | 0.0% | 0.0% | | | | | |
| 9036 | 27-Sep-73 | 0 | 165.06 | | 0.10 | 0 | 0.0 | 0.0% | 0.0% | | | | | |
| 9037 | 28-Sep-73 | 0 | 165.12 | | 0.10 | 0 | 0.0 | 0.0% | 0.0% | | | | | |
| 9038 | 29-Sep-73 | 0 | 165.10 | | 0.10 | 0 | 0.0 | 0.0% | 0.0% | | | | | |
| 9039 | 30-Sep-73 | 0 | 165.10 | | 0.10 | 0 | 0.0 | 0.0% | 0.0% | | | | | |
| 9040 | 01-Oct-73 | 0 | 165.10 | | 0.10 | 0 | 0.0 | 0.0% | 0.0% | | | | | |
| 9041 | 02-Oct-73 | 0 | 165.10 | | 0.10 | 0 | 0.0 | 0.0% | 0.0% | | | | | |
| 9042 | 03-Oct-73 | 0 | 165.44 | | 0.10 | 0 | 0.0 | 0.0% | 0.0% | | | | | |
| 9043 | 04-Oct-73 | 0 | 165.49 | | 0.10 | 0 | 0.0 | 0.0% | 0.0% | | | | | |
| 9044 | 05-Oct-73 | 0 | 165.69 | | 0.10 | 0 | 0.0 | 0.0% | 0.0% | | | | | |
| 9045 | 06-Oct-73 | 0 | 165.82 | | 0.10 | 0 | 0.0 | 0.0% | 0.0% | | | | | |

Little Bayou Meto
Flood Control Pumping Plant
3000-cfs (3 4000-hp)



| | G | H | I | J | K | L | M | N | O | P | Q | R | S | T |
|---|---|---|---|---|---|---|---|---|---|---|---|---|---|---|
| 1 | DATE | Q | h_sump | h_static | h_total | N | Bhp | E_Load | M_Load | M_eff | M_pf | P_In | S_In | W_e |
| 9046 | 07-Oct-73 | 0 | 165.81 | | 0.10 | 0 | 0.0 | 0.0% | 0.0% | | | | | |
| 9047 | 08-Oct-73 | 0 | 165.80 | | 0.10 | 0 | 0.0 | 0.0% | 0.0% | | | | | |
| 9048 | 09-Oct-73 | 0 | 166.11 | | 0.10 | 0 | 0.0 | 0.0% | 0.0% | | | | | |
| 9049 | 10-Oct-73 | 0 | 166.15 | | 0.10 | 0 | 0.0 | 0.0% | 0.0% | | | | | |
| 9050 | 11-Oct-73 | 2,444 | 167.53 | 0.51 | 0.61 | 5 | 1033.2 | 32.2% | 26.1% | 86.5% | 76.0% | 4,496.0 | 5,914.1 | 107,905 |
| 9051 | 12-Oct-73 | 0 | 159.01 | | 0.10 | 0 | 0.0 | 0.0% | 0.0% | | | | | |
| 9052 | 13-Oct-73 | 0 | 159.01 | | 0.10 | 0 | 0.0 | 0.0% | 0.0% | | | | | |
| 9053 | 14-Oct-73 | 0 | 159.01 | | 0.10 | 0 | 0.0 | 0.0% | 0.0% | | | | | |
| 9054 | 15-Oct-73 | 0 | 159.01 | | 0.10 | 0 | 0.0 | 0.0% | 0.0% | | | | | |
| 9055 | 16-Oct-73 | 0 | 159.01 | | 0.10 | 0 | 0.0 | 0.0% | 0.0% | | | | | |
| 9056 | 17-Oct-73 | 0 | 159.01 | | 0.10 | 0 | 0.0 | 0.0% | 0.0% | | | | | |
| 9057 | 18-Oct-73 | 0 | 159.02 | | 0.10 | 0 | 0.0 | 0.0% | 0.0% | | | | | |
| 9058 | 19-Oct-73 | 3,426 | 168.00 | 9.11 | 9.21 | 7 | 1268.6 | 39.6% | 32.0% | 87.8% | 78.3% | 7,613.2 | 9,719.6 | 182,717 |
| 9059 | 20-Oct-73 | 0 | 159.01 | | 0.10 | 0 | 0.0 | 0.0% | 0.0% | | | | | |
| 9060 | 21-Oct-73 | 0 | 159.01 | | 0.10 | 0 | 0.0 | 0.0% | 0.0% | | | | | |
| 9061 | 22-Oct-73 | 0 | 159.01 | | 0.10 | 0 | 0.0 | 0.0% | 0.0% | | | | | |
| 9062 | 23-Oct-73 | 0 | 159.01 | | 0.10 | 0 | 0.0 | 0.0% | 0.0% | | | | | |
| 9063 | 24-Oct-73 | 0 | 159.01 | | 0.10 | 0 | 0.0 | 0.0% | 0.0% | | | | | |
| 9064 | 25-Oct-73 | 0 | 159.01 | | 0.10 | 0 | 0.0 | 0.0% | 0.0% | | | | | |
| 9065 | 26-Oct-73 | 0 | 159.01 | | 0.10 | 0 | 0.0 | 0.0% | 0.0% | | | | | |
| 9066 | 27-Oct-73 | 0 | 159.01 | | 0.10 | 0 | 0.0 | 0.0% | 0.0% | | | | | |
| 9067 | 28-Oct-73 | 0 | 159.01 | | 0.10 | 0 | 0.0 | 0.0% | 0.0% | | | | | |
| 9068 | 29-Oct-73 | 0 | 159.01 | | 0.10 | 0 | 0.0 | 0.0% | 0.0% | | | | | |
| 9069 | 30-Oct-73 | 0 | 159.01 | | 0.10 | 0 | 0.0 | 0.0% | 0.0% | | | | | |
| 9070 | 31-Oct-73 | 0 | 159.01 | | 0.10 | 0 | 0.0 | 0.0% | 0.0% | | | | | |
| 9071 | 01-Nov-73 | 0 | 159.01 | | 0.10 | 0 | 0.0 | 0.0% | 0.0% | | | | | |
| 9072 | 02-Nov-73 | 0 | 159.01 | | 0.10 | 0 | 0.0 | 0.0% | 0.0% | | | | | |
| 9073 | 03-Nov-73 | 0 | 159.01 | | 0.10 | 0 | 0.0 | 0.0% | 0.0% | | | | | |
| 9074 | 04-Nov-73 | 0 | 159.01 | | 0.10 | 0 | 0.0 | 0.0% | 0.0% | | | | | |
| 9075 | 05-Nov-73 | 0 | 159.01 | | 0.10 | 0 | 0.0 | 0.0% | 0.0% | | | | | |
| 9076 | 06-Nov-73 | 0 | 159.01 | | 0.10 | 0 | 0.0 | 0.0% | 0.0% | | | | | |
| 9077 | 07-Nov-73 | 0 | 159.01 | | 0.10 | 0 | 0.0 | 0.0% | 0.0% | | | | | |
| 9078 | 08-Nov-73 | 0 | 159.01 | | 0.10 | 0 | 0.0 | 0.0% | 0.0% | | | | | |
| 9079 | 09-Nov-73 | 0 | 159.01 | | 0.10 | 0 | 0.0 | 0.0% | 0.0% | | | | | |
| 9080 | 10-Nov-73 | 0 | 159.01 | | 0.10 | 0 | 0.0 | 0.0% | 0.0% | | | | | |
| 9081 | 11-Nov-73 | 0 | 159.01 | | 0.10 | 0 | 0.0 | 0.0% | 0.0% | | | | | |
| 9082 | 12-Nov-73 | 3,684 | 168.25 | 0.00 | 0.10 | 7 | 1018.0 | 31.8% | 25.7% | 86.5% | 75.9% | 6,208.1 | 8,182.1 | 148,993 |
| 9083 | 13-Nov-73 | 0 | 159.01 | | 0.10 | 0 | 0.0 | 0.0% | 0.0% | | | | | |

Little Bayou Meto
Flood Control Pumping Plant
3000-cfs (3 4000-hp)



| | G | H | I | J | K | L | M | N | O | P | Q | R | S | T |
|---|---|---|---|---|---|---|---|---|---|---|---|---|---|---|
| 1 | DATE | Q | h_sump | h_static | h_total | N | Bhp | E_Load | M_Load | M_eff | M_pf | P_In | S_In | W_e |
| 17900 | | | | | | | | | | | | | | |
| 17901 | | | | | | | | | | | | | | |
| 17902 | | | | | | | | | | | | | | |
| 17903 | | Q | Period-of-Record Pumping Station Operating Statistics | | | | | | | | | | | |
| 17904 | DATE | (kcfs) | h_sump | h_static | h_total | N | Bhp | E_Load | M_Load | M_eff | M_pf | P_In | S_In | W_e |
| 17905 | 365.2 | (cfs) | (ft) | (ft) | (ft) | | (hp) | | | | | (kW) | (kVA) | (MWh) |
| 17906 | SUM/COUNT | 7,488.2 | N/A | N/A | N/A | N/A | N/A | N/A | N/A | N/A | N/A | N/A | N/A | 336,795 |
| 17907 | MIN | 0.0 | 159.0 | 0.0 | 0.1 | 0.0 | 0.0 | 0.0% | 0.0% | 86.5% | 75.9% | 1,773.7 | 2,337.7 | 42.57 |
| 17908 | AVG | 418.4 | 163.2 | 3.0 | 0.5 | 0.8 | 158.0 | 4.9% | 4.0% | 86.9% | 76.7% | 5,471.0 | 7,111.2 | 131.30 |
| 17909 | MAX | 3,684.0 | 176.7 | 23.0 | 23.1 | 7.0 | 1,511.7 | 47.2% | 38.2% | 89.2% | 80.7% | 8,935.1 | 11,070.6 | 214.44 |
| 17910 | | | | | | | | | | | | | | |
| 17911 | 17896 | = No. of days pumped over POR | | | | | | | | | | | | |
| 17912 | 429504 | = No. of hours pumped over POR | | | | | | | | | | | | |
| 17913 | 49.00 | = Duration of POR in years | | | | | | | | | | | | |
| 17914 | 4.2% | = Days pumped per year as a percentage | | | | | | | | | | | | |

**Cell:** K1
**Comment:** The pumping system HQ curve was used, not the pump bowl curve. Total dynamic head is the static head plus the 0.1-foot minimum head loss input to HEC-IFH CSA.

**Cell:** P1
**Comment:** The values in this column must be linearly interpolated.

**Cell:** Q1
**Comment:** The values in this column must be linearly interpolated.

**Cell:** H17904
**Comment:** Total flow (in SUM/COUNT line) over the POR of pump station in 1000's of cfs

**Cell:** G17905
**Comment:** Average number of hours pumped annually over the POR

**Cell:** H17905
**Comment:** Min, avg, and max flows of pump station over the POR in cfs

**Cell:** J17905
**Comment:** Hydraulic static head is the negative of mechanical static head

**Cell:** L17905
**Comment:** Number of pumps operating

**Cell:** M17905
**Comment:** Pump brake hp

**Cell:** N17905
**Comment:** Diesel engine load as a percentage

**Cell:** O17905
**Comment:** Electric motor load as a percentage

**Cell:** P17905
**Comment:** Electric motor efficiency as a function of M_load

**Cell:** Q17905
**Comment:** Electric motor power factor as a function of M_load

**Cell:** R17905
**Comment:** Power demand in kW of pumping station

**Cell:** S17905
**Comment:** Power demand in kVA of
pumping plant (accounts for power factor)

# APPENDIX C – ENGINEERING INVESTIGATIONS & ANALYSES
# FLOOD CONTROL COMPONENT

# SECTION IV – STRUCTURAL, MECHANICAL, ELECTRICAL & CIVIL DESIGN

# APPENDIX IV-C-E

Little Bayou Meto
Flood Control Pumping Plant
1000-cfs (2 1750-hp)



| | G | H | I | J | K | L | M | N | O | P | Q | R | S | T |
|---|---|---|---|---|---|---|---|---|---|---|---|---|---|---|
| 1 | DATE | Q | h_sump | h_static | h_total | N | Bhp | E_Load | M_Load | M_eff | M_pf | P_In | S_In | W_e |
| 8699 | 25-Oct-72 | 0 | 163.17 | | 0.10 | 0 | 0.0 | 0.0% | 0.0% | | | | | |
| 8700 | 26-Oct-72 | 0 | 163.37 | | 0.10 | 0 | 0.0 | 0.0% | 0.0% | | | | | |
| 8701 | 27-Oct-72 | 0 | 163.64 | | 0.10 | 0 | 0.0 | 0.0% | 0.0% | | | | | |
| 8702 | 28-Oct-72 | 0 | 163.62 | | 0.10 | 0 | 0.0 | 0.0% | 0.0% | | | | | |
| 8703 | 29-Oct-72 | 0 | 163.81 | | 0.10 | 0 | 0.0 | 0.0% | 0.0% | | | | | |
| 8704 | 30-Oct-72 | 0 | 164.67 | | 0.10 | 0 | 0.0 | 0.0% | 0.0% | | | | | |
| 8705 | 31-Oct-72 | 0 | 164.78 | | 0.10 | 0 | 0.0 | 0.0% | 0.0% | | | | | |
| 8706 | 01-Nov-72 | 0 | 165.41 | | 0.10 | 0 | 0.0 | 0.0% | 0.0% | | | | | |
| 8707 | 02-Nov-72 | 545 | 167.20 | 0.30 | 0.40 | 1 | 1027.0 | 60.4% | 59.3% | 91.9% | 86.3% | 841.9 | 975.3 | 20,205 |
| 8708 | 03-Nov-72 | 1,091 | 169.69 | 0.13 | 0.23 | 2 | 1021.9 | 60.1% | 59.0% | 91.8% | 86.3% | 1,676.0 | 1,943.0 | 40,225 |
| 8709 | 04-Nov-72 | 1,086 | 170.82 | 0.97 | 1.07 | 2 | 1046.9 | 61.6% | 60.4% | 92.0% | 86.5% | 1,713.9 | 1,980.4 | 41,134 |
| 8710 | 05-Nov-72 | 1,089 | 171.66 | 0.47 | 0.57 | 2 | 1032.0 | 60.7% | 59.6% | 91.9% | 86.4% | 1,691.4 | 1,958.2 | 40,593 |
| 8711 | 06-Nov-72 | 1,092 | 171.78 | 0.00 | 0.10 | 2 | 1018.0 | 59.9% | 58.8% | 91.8% | 86.2% | 1,670.2 | 1,937.2 | 40,084 |
| 8712 | 07-Nov-72 | 1,092 | 171.46 | 0.00 | 0.10 | 2 | 1018.0 | 59.9% | 58.8% | 91.8% | 86.2% | 1,670.2 | 1,937.2 | 40,084 |
| 8713 | 08-Nov-72 | 1,092 | 171.20 | 0.00 | 0.10 | 2 | 1018.0 | 59.9% | 58.8% | 91.8% | 86.2% | 1,670.2 | 1,937.2 | 40,084 |
| 8714 | 09-Nov-72 | 1,092 | 171.03 | 0.00 | 0.10 | 2 | 1018.0 | 59.9% | 58.8% | 91.8% | 86.2% | 1,670.2 | 1,937.2 | 40,084 |
| 8715 | 10-Nov-72 | 1,092 | 171.09 | 0.00 | 0.10 | 2 | 1018.0 | 59.9% | 58.8% | 91.8% | 86.2% | 1,670.2 | 1,937.2 | 40,084 |
| 8716 | 11-Nov-72 | 1,092 | 170.97 | 0.00 | 0.10 | 2 | 1018.0 | 59.9% | 58.8% | 91.8% | 86.2% | 1,670.2 | 1,937.2 | 40,084 |
| 8717 | 12-Nov-72 | 1,092 | 170.95 | 0.00 | 0.10 | 2 | 1018.0 | 59.9% | 58.8% | 91.8% | 86.2% | 1,670.2 | 1,937.2 | 40,084 |
| 8718 | 13-Nov-72 | 1,092 | 171.36 | 0.00 | 0.10 | 2 | 1018.0 | 59.9% | 58.8% | 91.8% | 86.2% | 1,670.2 | 1,937.2 | 40,084 |
| 8719 | 14-Nov-72 | 1,092 | 171.13 | 0.00 | 0.10 | 2 | 1018.0 | 59.9% | 58.8% | 91.8% | 86.2% | 1,670.2 | 1,937.2 | 40,084 |
| 8720 | 15-Nov-72 | 1,092 | 171.33 | 0.00 | 0.10 | 2 | 1018.0 | 59.9% | 58.8% | 91.8% | 86.2% | 1,670.2 | 1,937.2 | 40,084 |
| 8721 | 16-Nov-72 | 1,092 | 171.40 | 0.00 | 0.10 | 2 | 1018.0 | 59.9% | 58.8% | 91.8% | 86.2% | 1,670.2 | 1,937.2 | 40,084 |
| 8722 | 17-Nov-72 | 1,092 | 172.10 | 0.03 | 0.13 | 2 | 1018.9 | 60.0% | 58.8% | 91.8% | 86.2% | 1,671.5 | 1,938.5 | 40,117 |
| 8723 | 18-Nov-72 | 1,092 | 172.32 | 0.00 | 0.10 | 2 | 1018.0 | 59.9% | 58.8% | 91.8% | 86.2% | 1,670.2 | 1,937.2 | 40,084 |
| 8724 | 19-Nov-72 | 1,091 | 172.52 | 0.12 | 0.22 | 2 | 1021.6 | 60.1% | 59.0% | 91.8% | 86.3% | 1,675.6 | 1,942.6 | 40,214 |
| 8725 | 20-Nov-72 | 1,092 | 172.70 | 0.00 | 0.10 | 2 | 1018.0 | 59.9% | 58.8% | 91.8% | 86.2% | 1,670.2 | 1,937.2 | 40,084 |
| 8726 | 21-Nov-72 | 1,092 | 172.73 | 0.00 | 0.10 | 2 | 1018.0 | 59.9% | 58.8% | 91.8% | 86.2% | 1,670.2 | 1,937.2 | 40,084 |
| 8727 | 22-Nov-72 | 1,091 | 172.92 | 0.23 | 0.33 | 2 | 1024.9 | 60.3% | 59.2% | 91.9% | 86.3% | 1,680.6 | 1,947.5 | 40,334 |
| 8728 | 23-Nov-72 | 1,092 | 173.01 | 0.00 | 0.10 | 2 | 1018.0 | 59.9% | 58.8% | 91.8% | 86.2% | 1,670.2 | 1,937.2 | 40,084 |
| 8729 | 24-Nov-72 | 1,092 | 172.92 | 0.00 | 0.10 | 2 | 1018.0 | 59.9% | 58.8% | 91.8% | 86.2% | 1,670.2 | 1,937.2 | 40,084 |
| 8730 | 25-Nov-72 | 1,092 | 172.78 | 0.00 | 0.10 | 2 | 1018.0 | 59.9% | 58.8% | 91.8% | 86.2% | 1,670.2 | 1,937.2 | 40,084 |
| 8731 | 26-Nov-72 | 1,092 | 172.75 | 0.00 | 0.10 | 2 | 1018.0 | 59.9% | 58.8% | 91.8% | 86.2% | 1,670.2 | 1,937.2 | 40,084 |
| 8732 | 27-Nov-72 | 1,092 | 172.58 | 0.00 | 0.10 | 2 | 1018.0 | 59.9% | 58.8% | 91.8% | 86.2% | 1,670.2 | 1,937.2 | 40,084 |
| 8733 | 28-Nov-72 | 1,092 | 172.27 | 0.00 | 0.10 | 2 | 1018.0 | 59.9% | 58.8% | 91.8% | 86.2% | 1,670.2 | 1,937.2 | 40,084 |
| 8734 | 29-Nov-72 | 1,092 | 171.70 | 0.00 | 0.10 | 2 | 1018.0 | 59.9% | 58.8% | 91.8% | 86.2% | 1,670.2 | 1,937.2 | 40,084 |
| 8735 | 30-Nov-72 | 1,092 | 171.29 | 0.00 | 0.10 | 2 | 1018.0 | 59.9% | 58.8% | 91.8% | 86.2% | 1,670.2 | 1,937.2 | 40,084 |
| 8736 | 01-Dec-72 | 1,092 | 170.58 | 0.00 | 0.10 | 2 | 1018.0 | 59.9% | 58.8% | 91.8% | 86.2% | 1,670.2 | 1,937.2 | 40,084 |
| 8737 | 02-Dec-72 | 1,092 | 170.28 | 0.00 | 0.10 | 2 | 1018.0 | 59.9% | 58.8% | 91.8% | 86.2% | 1,670.2 | 1,937.2 | 40,084 |

Little Bayou Meto
Flood Control Pumping Plant
1000-cfs (2 1750-hp)



| | G | H | I | J | K | L | M | N | O | P | Q | R | S | T |
|---|---|---|---|---|---|---|---|---|---|---|---|---|---|---|
| 1 | DATE | Q | h_sump | h_static | h_total | N | Bhp | E_Load | M_Load | M_eff | M_pf | P_In | S_In | W_e |
| 8738 | 03-Dec-72 | 1,091 | 169.62 | 0.20 | 0.30 | 2 | 1024.0 | 60.3% | 59.1% | 91.9% | 86.3% | 1,679.2 | 1,946.2 | 40,301 |
| 8739 | 04-Dec-72 | 1,080 | 167.70 | 2.12 | 2.22 | 2 | 1081.0 | 63.6% | 62.4% | 92.2% | 86.9% | 1,765.3 | 2,030.8 | 42,368 |
| 8740 | 05-Dec-72 | 1,048 | 163.38 | 6.44 | 6.54 | 2 | 1205.2 | 70.9% | 69.6% | 93.1% | 88.3% | 1,950.6 | 2,208.3 | 46,815 |
| 8741 | 06-Dec-72 | 0 | 159.04 | | 0.10 | 0 | 0.0 | 0.0% | 0.0% | | | | | |
| 8742 | 07-Dec-72 | 0 | 164.92 | | 0.10 | 0 | 0.0 | 0.0% | 0.0% | | | | | |
| 8743 | 08-Dec-72 | 1,087 | 168.49 | 0.87 | 0.97 | 2 | 1043.9 | 61.4% | 60.2% | 92.0% | 86.5% | 1,709.4 | 1,976.0 | 41,026 |
| 8744 | 09-Dec-72 | 1,058 | 164.22 | 5.14 | 5.24 | 2 | 1168.5 | 68.8% | 67.4% | 92.8% | 87.9% | 1,896.2 | 2,156.8 | 45,508 |
| 8745 | 10-Dec-72 | 0 | 160.28 | | 0.10 | 0 | 0.0 | 0.0% | 0.0% | | | | | |
| 8746 | 11-Dec-72 | 1,092 | 169.39 | 0.00 | 0.10 | 2 | 1018.0 | 59.9% | 58.8% | 91.8% | 86.2% | 1,670.2 | 1,937.2 | 40,084 |
| 8747 | 12-Dec-72 | 1,092 | 169.55 | 0.00 | 0.10 | 2 | 1018.0 | 59.9% | 58.8% | 91.8% | 86.2% | 1,670.2 | 1,937.2 | 40,084 |
| 8748 | 13-Dec-72 | 1,092 | 170.07 | 0.00 | 0.10 | 2 | 1018.0 | 59.9% | 58.8% | 91.8% | 86.2% | 1,670.2 | 1,937.2 | 40,084 |
| 8749 | 14-Dec-72 | 1,092 | 170.23 | 0.00 | 0.10 | 2 | 1018.0 | 59.9% | 58.8% | 91.8% | 86.2% | 1,670.2 | 1,937.2 | 40,084 |
| 8750 | 15-Dec-72 | 1,092 | 170.47 | 0.00 | 0.10 | 2 | 1018.0 | 59.9% | 58.8% | 91.8% | 86.2% | 1,670.2 | 1,937.2 | 40,084 |
| 8751 | 16-Dec-72 | 1,092 | 170.88 | 0.00 | 0.10 | 2 | 1018.0 | 59.9% | 58.8% | 91.8% | 86.2% | 1,670.2 | 1,937.2 | 40,084 |
| 8752 | 17-Dec-72 | 1,092 | 171.21 | 0.00 | 0.10 | 2 | 1018.0 | 59.9% | 58.8% | 91.8% | 86.2% | 1,670.2 | 1,937.2 | 40,084 |
| 8753 | 18-Dec-72 | 1,092 | 171.24 | 0.00 | 0.10 | 2 | 1018.0 | 59.9% | 58.8% | 91.8% | 86.2% | 1,670.2 | 1,937.2 | 40,084 |
| 8754 | 19-Dec-72 | 1,092 | 171.18 | 0.00 | 0.10 | 2 | 1018.0 | 59.9% | 58.8% | 91.8% | 86.2% | 1,670.2 | 1,937.2 | 40,084 |
| 8755 | 20-Dec-72 | 1,092 | 171.34 | 0.00 | 0.10 | 2 | 1018.0 | 59.9% | 58.8% | 91.8% | 86.2% | 1,670.2 | 1,937.2 | 40,084 |
| 8756 | 21-Dec-72 | 1,092 | 171.22 | 0.00 | 0.10 | 2 | 1018.0 | 59.9% | 58.8% | 91.8% | 86.2% | 1,670.2 | 1,937.2 | 40,084 |
| 8757 | 22-Dec-72 | 1,092 | 170.54 | 0.00 | 0.10 | 2 | 1018.0 | 59.9% | 58.8% | 91.8% | 86.2% | 1,670.2 | 1,937.2 | 40,084 |
| 8758 | 23-Dec-72 | 1,092 | 170.13 | 0.00 | 0.10 | 2 | 1018.0 | 59.9% | 58.8% | 91.8% | 86.2% | 1,670.2 | 1,937.2 | 40,084 |
| 8759 | 24-Dec-72 | 1,092 | 169.93 | 0.00 | 0.10 | 2 | 1018.0 | 59.9% | 58.8% | 91.8% | 86.2% | 1,670.2 | 1,937.2 | 40,084 |
| 8760 | 25-Dec-72 | 1,092 | 169.58 | 0.00 | 0.10 | 2 | 1018.0 | 59.9% | 58.8% | 91.8% | 86.2% | 1,670.2 | 1,937.2 | 40,084 |
| 8761 | 26-Dec-72 | 1,092 | 169.31 | 0.00 | 0.10 | 2 | 1018.0 | 59.9% | 58.8% | 91.8% | 86.2% | 1,670.2 | 1,937.2 | 40,084 |
| 8762 | 27-Dec-72 | 1,092 | 168.54 | 0.00 | 0.10 | 2 | 1018.0 | 59.9% | 58.8% | 91.8% | 86.2% | 1,670.2 | 1,937.2 | 40,084 |
| 8763 | 28-Dec-72 | 1,092 | 168.45 | 0.00 | 0.10 | 2 | 1018.0 | 59.9% | 58.8% | 91.8% | 86.2% | 1,670.2 | 1,937.2 | 40,084 |
| 8764 | 29-Dec-72 | 1,092 | 168.33 | 0.00 | 0.10 | 2 | 1018.0 | 59.9% | 58.8% | 91.8% | 86.2% | 1,670.2 | 1,937.2 | 40,084 |
| 8765 | 30-Dec-72 | 1,092 | 168.10 | 0.00 | 0.10 | 2 | 1018.0 | 59.9% | 58.8% | 91.8% | 86.2% | 1,670.2 | 1,937.2 | 40,084 |
| 8766 | 31-Dec-72 | 1,091 | 167.94 | 0.10 | 0.20 | 2 | 1021.0 | 60.1% | 58.9% | 91.8% | 86.2% | 1,674.7 | 1,941.7 | 40,193 |
| 8767 | 01-Jan-73 | 1,088 | 167.04 | 0.73 | 0.83 | 2 | 1039.8 | 61.2% | 60.0% | 92.0% | 86.5% | 1,703.1 | 1,969.8 | 40,875 |
| 8768 | 02-Jan-73 | 1,076 | 165.00 | 2.77 | 2.87 | 2 | 1099.9 | 64.7% | 63.5% | 92.4% | 87.1% | 1,793.8 | 2,058.4 | 43,051 |
| 8769 | 03-Jan-73 | 0 | 161.56 | | 0.10 | 0 | 0.0 | 0.0% | 0.0% | | | | | |
| 8770 | 04-Jan-73 | 1,090 | 167.72 | 0.32 | 0.42 | 2 | 1027.6 | 60.5% | 59.3% | 91.9% | 86.3% | 1,684.6 | 1,951.5 | 40,431 |
| 8771 | 05-Jan-73 | 0 | 162.71 | | 0.10 | 0 | 0.0 | 0.0% | 0.0% | | | | | |
| 8772 | 06-Jan-73 | 1,083 | 167.62 | 1.50 | 1.60 | 2 | 1062.7 | 62.5% | 61.3% | 92.1% | 86.7% | 1,737.7 | 2,003.8 | 41,706 |
| 8773 | 07-Jan-73 | 0 | 162.80 | | 0.10 | 0 | 0.0 | 0.0% | 0.0% | | | | | |
| 8774 | 08-Jan-73 | 1,087 | 168.44 | 0.92 | 1.02 | 2 | 1045.4 | 61.5% | 60.3% | 92.0% | 86.5% | 1,711.7 | 1,978.2 | 41,080 |
| 8775 | 09-Jan-73 | 1,069 | 165.79 | 3.80 | 3.90 | 2 | 1129.9 | 66.5% | 65.2% | 92.6% | 87.5% | 1,838.7 | 2,101.8 | 44,128 |
| 8776 | 10-Jan-73 | 1,054 | 163.71 | 5.65 | 5.75 | 2 | 1183.1 | 69.6% | 68.3% | 92.9% | 88.1% | 1,917.9 | 2,177.4 | 46,030 |

Little Bayou Meto
Flood Control Pumping Plant
1000-cfs (2 1750-hp)



| | G | H | I | J | K | L | M | N | O | P | Q | R | S | T |
|---|---|---|---|---|---|---|---|---|---|---|---|---|---|---|
| 1 | DATE | Q | h_sump | h_static | h_total | N | Bhp | E_Load | M_Load | M_eff | M_pf | P_In | S_In | W_e |
| 8777 | 11-Jan-73 | 0 | 162.65 | | 0.10 | 0 | 0.0 | 0.0% | 0.0% | | | | | |
| 8778 | 12-Jan-73 | 1,092 | 169.73 | 0.00 | 0.10 | 2 | 1018.0 | 59.9% | 58.8% | 91.8% | 86.2% | 1,670.2 | 1,937.2 | 40,084 |
| 8779 | 13-Jan-73 | 1,088 | 168.90 | 0.69 | 0.79 | 2 | 1038.6 | 61.1% | 59.9% | 92.0% | 86.4% | 1,701.3 | 1,968.0 | 40,831 |
| 8780 | 14-Jan-73 | 1,081 | 167.54 | 1.82 | 1.92 | 2 | 1072.2 | 63.1% | 61.9% | 92.2% | 86.8% | 1,752.1 | 2,017.9 | 42,050 |
| 8781 | 15-Jan-73 | 1,067 | 165.28 | 4.08 | 4.18 | 2 | 1138.0 | 67.0% | 65.7% | 92.6% | 87.6% | 1,850.8 | 2,113.5 | 44,420 |
| 8782 | 16-Jan-73 | 0 | 161.75 | | 0.10 | 0 | 0.0 | 0.0% | 0.0% | | | | | |
| 8783 | 17-Jan-73 | 1,084 | 167.89 | 1.47 | 1.57 | 2 | 1061.8 | 62.5% | 61.3% | 92.1% | 86.7% | 1,736.4 | 2,002.5 | 41,673 |
| 8784 | 18-Jan-73 | 1,049 | 163.22 | 6.37 | 6.47 | 2 | 1203.5 | 70.8% | 69.5% | 93.1% | 88.3% | 1,948.2 | 2,205.9 | 46,756 |
| 8785 | 19-Jan-73 | 0 | 159.03 | | 0.10 | 0 | 0.0 | 0.0% | 0.0% | | | | | |
| 8786 | 20-Jan-73 | 0 | 164.38 | | 0.10 | 0 | 0.0 | 0.0% | 0.0% | | | | | |
| 8787 | 21-Jan-73 | 539 | 167.30 | 2.29 | 2.39 | 1 | 1085.9 | 63.9% | 62.7% | 92.3% | 87.0% | 886.4 | 1,019.0 | 21,273 |
| 8788 | 22-Jan-73 | 528 | 165.07 | 5.44 | 5.54 | 1 | 1177.1 | 69.3% | 67.9% | 92.9% | 88.0% | 954.5 | 1,084.5 | 22,908 |
| 8789 | 23-Jan-73 | 526 | 165.73 | 5.89 | 5.99 | 1 | 1190.0 | 70.0% | 68.7% | 93.0% | 88.2% | 964.1 | 1,093.5 | 23,138 |
| 8790 | 24-Jan-73 | 1,069 | 170.26 | 3.69 | 3.79 | 2 | 1126.7 | 66.3% | 65.0% | 92.5% | 87.4% | 1,833.9 | 2,097.2 | 44,013 |
| 8791 | 25-Jan-73 | 1,075 | 171.67 | 2.92 | 3.02 | 2 | 1104.3 | 65.0% | 63.7% | 92.4% | 87.2% | 1,800.3 | 2,064.8 | 43,208 |
| 8792 | 26-Jan-73 | 1,079 | 172.48 | 2.27 | 2.37 | 2 | 1085.4 | 63.9% | 62.6% | 92.3% | 87.0% | 1,771.9 | 2,037.2 | 42,526 |
| 8793 | 27-Jan-73 | 1,082 | 172.82 | 1.77 | 1.87 | 2 | 1070.7 | 63.0% | 61.8% | 92.2% | 86.8% | 1,749.8 | 2,015.7 | 41,996 |
| 8794 | 28-Jan-73 | 1,086 | 173.09 | 1.02 | 1.12 | 2 | 1048.4 | 61.7% | 60.5% | 92.0% | 86.6% | 1,716.2 | 1,982.6 | 41,188 |
| 8795 | 29-Jan-73 | 1,088 | 173.36 | 0.75 | 0.85 | 2 | 1040.3 | 61.2% | 60.0% | 92.0% | 86.5% | 1,704.0 | 1,970.7 | 40,896 |
| 8796 | 30-Jan-73 | 1,087 | 173.60 | 0.83 | 0.93 | 2 | 1042.7 | 61.4% | 60.2% | 92.0% | 86.5% | 1,707.6 | 1,974.2 | 40,983 |
| 8797 | 31-Jan-73 | 1,087 | 173.82 | 0.93 | 1.03 | 2 | 1045.7 | 61.5% | 60.4% | 92.0% | 86.5% | 1,712.1 | 1,978.7 | 41,091 |
| 8798 | 01-Feb-73 | 1,087 | 174.01 | 0.89 | 0.99 | 2 | 1044.5 | 61.5% | 60.3% | 92.0% | 86.5% | 1,710.3 | 1,976.9 | 41,047 |
| 8799 | 02-Feb-73 | 1,088 | 174.17 | 0.73 | 0.83 | 2 | 1039.8 | 61.2% | 60.0% | 92.0% | 86.5% | 1,703.1 | 1,969.8 | 40,875 |
| 8800 | 03-Feb-73 | 1,089 | 174.30 | 0.45 | 0.55 | 2 | 1031.4 | 60.7% | 59.5% | 91.9% | 86.4% | 1,690.5 | 1,957.3 | 40,572 |
| 8801 | 04-Feb-73 | 1,090 | 174.43 | 0.32 | 0.42 | 2 | 1027.6 | 60.5% | 59.3% | 91.9% | 86.3% | 1,684.6 | 1,951.5 | 40,431 |
| 8802 | 05-Feb-73 | 1,090 | 174.52 | 0.37 | 0.47 | 2 | 1029.0 | 60.6% | 59.4% | 91.9% | 86.3% | 1,686.9 | 1,953.8 | 40,485 |
| 8803 | 06-Feb-73 | 1,089 | 174.59 | 0.59 | 0.69 | 2 | 1035.6 | 61.0% | 59.8% | 91.9% | 86.4% | 1,696.8 | 1,963.6 | 40,723 |
| 8804 | 07-Feb-73 | 1,088 | 174.63 | 0.69 | 0.79 | 2 | 1038.6 | 61.1% | 59.9% | 92.0% | 86.4% | 1,701.3 | 1,968.0 | 40,831 |
| 8805 | 08-Feb-73 | 1,086 | 174.64 | 0.96 | 1.06 | 2 | 1046.6 | 61.6% | 60.4% | 92.0% | 86.5% | 1,713.5 | 1,980.0 | 41,123 |
| 8806 | 09-Feb-73 | 1,086 | 174.64 | 1.10 | 1.20 | 2 | 1050.8 | 61.8% | 60.6% | 92.0% | 86.6% | 1,719.8 | 1,986.2 | 41,274 |
| 8807 | 10-Feb-73 | 1,086 | 174.65 | 1.08 | 1.18 | 2 | 1050.2 | 61.8% | 60.6% | 92.0% | 86.6% | 1,718.9 | 1,985.3 | 41,253 |
| 8808 | 11-Feb-73 | 1,086 | 174.71 | 1.03 | 1.13 | 2 | 1048.7 | 61.7% | 60.5% | 92.0% | 86.6% | 1,716.6 | 1,983.1 | 41,199 |
| 8809 | 12-Feb-73 | 1,087 | 174.79 | 0.95 | 1.05 | 2 | 1046.3 | 61.6% | 60.4% | 92.0% | 86.5% | 1,713.0 | 1,979.5 | 41,112 |
| 8810 | 13-Feb-73 | 1,086 | 174.87 | 1.01 | 1.11 | 2 | 1048.1 | 61.7% | 60.5% | 92.0% | 86.6% | 1,715.7 | 1,982.2 | 41,177 |
| 8811 | 14-Feb-73 | 1,086 | 174.95 | 1.07 | 1.17 | 2 | 1049.9 | 61.8% | 60.6% | 92.0% | 86.6% | 1,718.4 | 1,984.9 | 41,242 |
| 8812 | 15-Feb-73 | 1,086 | 175.03 | 0.99 | 1.09 | 2 | 1047.5 | 61.7% | 60.5% | 92.0% | 86.5% | 1,714.8 | 1,981.3 | 41,155 |
| 8813 | 16-Feb-73 | 1,088 | 175.11 | 0.77 | 0.87 | 2 | 1040.9 | 61.3% | 60.1% | 92.0% | 86.5% | 1,704.9 | 1,971.6 | 40,918 |
| 8814 | 17-Feb-73 | 1,088 | 175.19 | 0.69 | 0.79 | 2 | 1038.6 | 61.1% | 59.9% | 92.0% | 86.4% | 1,701.3 | 1,968.0 | 40,831 |
| 8815 | 18-Feb-73 | 1,089 | 175.25 | 0.49 | 0.59 | 2 | 1032.6 | 60.8% | 59.6% | 91.9% | 86.4% | 1,692.3 | 1,959.1 | 40,615 |

Little Bayou Meto
Flood Control Pumping Plant
1000-cfs (2 1750-hp)



| | G | H | I | J | K | L | M | N | O | P | Q | R | S | T |
|---|---|---|---|---|---|---|---|---|---|---|---|---|---|---|
| 1 | DATE | Q | h_sump | h_static | h_total | N | Bhp | E_Load | M_Load | M_eff | M_pf | P_In | S_In | W_e |
| 8816 | 19-Feb-73 | 1,089 | 175.30 | 0.44 | 0.54 | 2 | 1031.1 | 60.7% | 59.5% | 91.9% | 86.4% | 1,690.0 | 1,956.9 | 40,561 |
| 8817 | 20-Feb-73 | 1,092 | 175.33 | 0.00 | 0.10 | 2 | 1018.0 | 59.9% | 58.8% | 91.8% | 86.2% | 1,670.2 | 1,937.2 | 40,084 |
| 8818 | 21-Feb-73 | 1,092 | 174.91 | 0.00 | 0.10 | 2 | 1018.0 | 59.9% | 58.8% | 91.8% | 86.2% | 1,670.2 | 1,937.2 | 40,084 |
| 8819 | 22-Feb-73 | 1,092 | 174.08 | 0.00 | 0.10 | 2 | 1018.0 | 59.9% | 58.8% | 91.8% | 86.2% | 1,670.2 | 1,937.2 | 40,084 |
| 8820 | 23-Feb-73 | 1,092 | 172.98 | 0.00 | 0.10 | 2 | 1018.0 | 59.9% | 58.8% | 91.8% | 86.2% | 1,670.2 | 1,937.2 | 40,084 |
| 8821 | 24-Feb-73 | 1,092 | 169.77 | 0.00 | 0.10 | 2 | 1018.0 | 59.9% | 58.8% | 91.8% | 86.2% | 1,670.2 | 1,937.2 | 40,084 |
| 8822 | 25-Feb-73 | 1,092 | 165.67 | 0.00 | 0.10 | 2 | 1018.0 | 59.9% | 58.8% | 91.8% | 86.2% | 1,670.2 | 1,937.2 | 40,084 |
| 8823 | 26-Feb-73 | 0 | 159.02 | | 0.10 | 0 | 0.0 | 0.0% | 0.0% | | | | | |
| 8824 | 27-Feb-73 | 0 | 164.17 | | 0.10 | 0 | 0.0 | 0.0% | 0.0% | | | | | |
| 8825 | 28-Feb-73 | 0 | 166.88 | | 0.10 | 0 | 0.0 | 0.0% | 0.0% | | | | | |
| 8826 | 01-Mar-73 | 546 | 167.31 | 0.00 | 0.10 | 1 | 1018.0 | 59.9% | 58.8% | 91.8% | 86.2% | 835.1 | 968.6 | 20,042 |
| 8827 | 02-Mar-73 | 539 | 165.05 | 2.45 | 2.55 | 1 | 1090.6 | 64.2% | 62.9% | 92.3% | 87.0% | 889.9 | 1,022.4 | 21,357 |
| 8828 | 03-Mar-73 | 0 | 162.65 | | 0.10 | 0 | 0.0 | 0.0% | 0.0% | | | | | |
| 8829 | 04-Mar-73 | 0 | 166.65 | | 0.10 | 0 | 0.0 | 0.0% | 0.0% | | | | | |
| 8830 | 05-Mar-73 | 1,081 | 169.67 | 1.94 | 2.04 | 2 | 1075.7 | 63.3% | 62.1% | 92.2% | 86.9% | 1,757.5 | 2,023.1 | 42,179 |
| 8831 | 06-Mar-73 | 1,052 | 167.52 | 5.95 | 6.05 | 2 | 1191.7 | 70.1% | 68.8% | 93.0% | 88.2% | 1,930.7 | 2,189.5 | 46,337 |
| 8832 | 07-Mar-73 | 1,022 | 165.63 | 9.27 | 9.37 | 2 | 1272.3 | 74.9% | 73.4% | 93.5% | 89.1% | 2,049.3 | 2,300.2 | 49,184 |
| 8833 | 08-Mar-73 | 1,000 | 164.18 | 11.56 | 11.66 | 2 | 1329.4 | 78.2% | 76.7% | 93.8% | 89.6% | 2,135.8 | 2,384.3 | 51,260 |
| 8834 | 09-Mar-73 | 993 | 164.11 | 12.20 | 12.30 | 2 | 1347.3 | 79.3% | 77.8% | 93.8% | 89.7% | 2,163.8 | 2,412.7 | 51,932 |
| 8835 | 10-Mar-73 | 1,008 | 166.43 | 10.84 | 10.94 | 2 | 1309.2 | 77.1% | 75.6% | 93.7% | 89.5% | 2,104.3 | 2,352.3 | 50,504 |
| 8836 | 11-Mar-73 | 1,023 | 168.66 | 9.22 | 9.32 | 2 | 1271.1 | 74.8% | 73.4% | 93.5% | 89.1% | 2,047.6 | 2,298.6 | 49,143 |
| 8837 | 12-Mar-73 | 1,035 | 169.99 | 7.89 | 7.99 | 2 | 1239.8 | 73.0% | 71.6% | 93.3% | 88.7% | 2,001.6 | 2,255.9 | 48,037 |
| 8838 | 13-Mar-73 | 1,041 | 170.85 | 7.27 | 7.37 | 2 | 1225.0 | 72.1% | 70.7% | 93.2% | 88.6% | 1,979.8 | 2,235.6 | 47,516 |
| 8839 | 14-Mar-73 | 1,045 | 171.57 | 6.79 | 6.89 | 2 | 1213.6 | 71.4% | 70.0% | 93.1% | 88.4% | 1,963.0 | 2,219.8 | 47,111 |
| 8840 | 15-Mar-73 | 1,049 | 172.09 | 6.27 | 6.37 | 2 | 1200.9 | 70.7% | 69.3% | 93.0% | 88.3% | 1,944.3 | 2,202.3 | 46,663 |
| 8841 | 16-Mar-73 | 1,052 | 172.33 | 5.91 | 6.01 | 2 | 1190.6 | 70.1% | 68.7% | 93.0% | 88.2% | 1,929.0 | 2,187.9 | 46,296 |
| 8842 | 17-Mar-73 | 1,054 | 172.49 | 5.75 | 5.85 | 2 | 1186.0 | 69.8% | 68.4% | 92.9% | 88.1% | 1,922.2 | 2,181.4 | 46,132 |
| 8843 | 18-Mar-73 | 1,055 | 172.66 | 5.58 | 5.68 | 2 | 1181.1 | 69.5% | 68.2% | 92.9% | 88.1% | 1,914.9 | 2,174.6 | 45,959 |
| 8844 | 19-Mar-73 | 1,057 | 172.87 | 5.37 | 5.47 | 2 | 1175.1 | 69.2% | 67.8% | 92.9% | 88.0% | 1,906.0 | 2,166.1 | 45,744 |
| 8845 | 20-Mar-73 | 1,058 | 173.10 | 5.14 | 5.24 | 2 | 1168.5 | 68.8% | 67.4% | 92.8% | 87.9% | 1,896.2 | 2,156.8 | 45,508 |
| 8846 | 21-Mar-73 | 1,060 | 173.31 | 4.93 | 5.03 | 2 | 1162.4 | 68.4% | 67.1% | 92.8% | 87.8% | 1,887.2 | 2,148.2 | 45,293 |
| 8847 | 22-Mar-73 | 1,062 | 173.49 | 4.75 | 4.85 | 2 | 1157.3 | 68.1% | 66.8% | 92.7% | 87.8% | 1,879.5 | 2,140.9 | 45,109 |
| 8848 | 23-Mar-73 | 1,064 | 173.64 | 4.48 | 4.58 | 2 | 1149.5 | 67.7% | 66.3% | 92.7% | 87.7% | 1,868.0 | 2,129.9 | 44,831 |
| 8849 | 24-Mar-73 | 1,065 | 173.76 | 4.36 | 4.46 | 2 | 1146.1 | 67.5% | 66.1% | 92.7% | 87.7% | 1,862.8 | 2,125.0 | 44,708 |
| 8850 | 25-Mar-73 | 1,065 | 173.85 | 4.27 | 4.37 | 2 | 1143.5 | 67.3% | 66.0% | 92.7% | 87.6% | 1,859.0 | 2,121.3 | 44,616 |
| 8851 | 26-Mar-73 | 1,066 | 173.91 | 4.21 | 4.31 | 2 | 1141.8 | 67.2% | 65.9% | 92.6% | 87.6% | 1,856.4 | 2,118.8 | 44,554 |
| 8852 | 27-Mar-73 | 1,067 | 173.97 | 4.03 | 4.13 | 2 | 1136.6 | 66.9% | 65.6% | 92.6% | 87.6% | 1,848.7 | 2,111.4 | 44,368 |
| 8853 | 28-Mar-73 | 1,067 | 174.08 | 4.04 | 4.14 | 2 | 1136.9 | 66.9% | 65.6% | 92.6% | 87.6% | 1,849.1 | 2,111.8 | 44,378 |
| 8854 | 29-Mar-73 | 1,068 | 174.22 | 3.90 | 4.00 | 2 | 1132.8 | 66.7% | 65.4% | 92.6% | 87.5% | 1,843.0 | 2,106.0 | 44,232 |

Little Bayou Meto
Flood Control Pumping Plant
1000-cfs (2 1750-hp)



| | G | H | I | J | K | L | M | N | O | P | Q | R | S | T |
|---|---|---|---|---|---|---|---|---|---|---|---|---|---|---|
| 1 | DATE | Q | h_sump | h_static | h_total | N | Bhp | E_Load | M_Load | M_eff | M_pf | P_In | S_In | W_e |
| 8855 | 30-Mar-73 | 1,069 | 174.35 | 3.77 | 3.87 | 2 | 1129.0 | 66.4% | 65.2% | 92.6% | 87.5% | 1,837.4 | 2,100.5 | 44,096 |
| 8856 | 31-Mar-73 | 1,070 | 174.47 | 3.53 | 3.63 | 2 | 1122.0 | 66.0% | 64.8% | 92.5% | 87.4% | 1,826.9 | 2,090.5 | 43,846 |
| 8857 | 01-Apr-73 | 1,071 | 174.56 | 3.44 | 3.54 | 2 | 1119.4 | 65.9% | 64.6% | 92.5% | 87.4% | 1,823.0 | 2,086.7 | 43,752 |
| 8858 | 02-Apr-73 | 1,072 | 174.65 | 3.35 | 3.45 | 2 | 1116.8 | 65.7% | 64.5% | 92.5% | 87.3% | 1,819.1 | 2,082.9 | 43,658 |
| 8859 | 03-Apr-73 | 1,072 | 174.75 | 3.25 | 3.35 | 2 | 1113.9 | 65.6% | 64.3% | 92.5% | 87.3% | 1,814.7 | 2,078.7 | 43,553 |
| 8860 | 04-Apr-73 | 1,074 | 174.84 | 3.04 | 3.14 | 2 | 1107.8 | 65.2% | 63.9% | 92.4% | 87.2% | 1,805.6 | 2,069.9 | 43,333 |
| 8861 | 05-Apr-73 | 1,075 | 174.91 | 2.83 | 2.93 | 2 | 1101.6 | 64.8% | 63.6% | 92.4% | 87.2% | 1,796.4 | 2,061.0 | 43,113 |
| 8862 | 06-Apr-73 | 1,076 | 174.98 | 2.77 | 2.87 | 2 | 1099.9 | 64.7% | 63.5% | 92.4% | 87.1% | 1,793.8 | 2,058.4 | 43,051 |
| 8863 | 07-Apr-73 | 1,075 | 175.03 | 2.85 | 2.95 | 2 | 1102.2 | 64.9% | 63.6% | 92.4% | 87.2% | 1,797.3 | 2,061.8 | 43,134 |
| 8864 | 08-Apr-73 | 1,074 | 175.06 | 2.94 | 3.04 | 2 | 1104.8 | 65.0% | 63.8% | 92.4% | 87.2% | 1,801.2 | 2,065.6 | 43,229 |
| 8865 | 09-Apr-73 | 1,075 | 175.07 | 2.81 | 2.91 | 2 | 1101.1 | 64.8% | 63.5% | 92.4% | 87.2% | 1,795.5 | 2,060.1 | 43,092 |
| 8866 | 10-Apr-73 | 1,074 | 175.07 | 2.93 | 3.03 | 2 | 1104.6 | 65.0% | 63.7% | 92.4% | 87.2% | 1,800.8 | 2,065.2 | 43,218 |
| 8867 | 11-Apr-73 | 1,074 | 175.07 | 2.93 | 3.03 | 2 | 1104.6 | 65.0% | 63.7% | 92.4% | 87.2% | 1,800.8 | 2,065.2 | 43,218 |
| 8868 | 12-Apr-73 | 1,074 | 175.08 | 3.04 | 3.14 | 2 | 1107.8 | 65.2% | 63.9% | 92.4% | 87.2% | 1,805.6 | 2,069.9 | 43,333 |
| 8869 | 13-Apr-73 | 1,073 | 175.09 | 3.15 | 3.25 | 2 | 1111.0 | 65.4% | 64.1% | 92.4% | 87.3% | 1,810.4 | 2,074.5 | 43,449 |
| 8870 | 14-Apr-73 | 1,071 | 175.10 | 3.50 | 3.60 | 2 | 1121.1 | 66.0% | 64.7% | 92.5% | 87.4% | 1,825.6 | 2,089.2 | 43,815 |
| 8871 | 15-Apr-73 | 1,067 | 175.09 | 4.04 | 4.14 | 2 | 1136.9 | 66.9% | 65.6% | 92.6% | 87.6% | 1,849.1 | 2,111.8 | 44,378 |
| 8872 | 16-Apr-73 | 1,067 | 175.08 | 4.05 | 4.15 | 2 | 1137.1 | 66.9% | 65.6% | 92.6% | 87.6% | 1,849.5 | 2,112.2 | 44,389 |
| 8873 | 17-Apr-73 | 1,067 | 175.06 | 4.07 | 4.17 | 2 | 1137.7 | 67.0% | 65.7% | 92.6% | 87.6% | 1,850.4 | 2,113.0 | 44,409 |
| 8874 | 18-Apr-73 | 1,064 | 175.04 | 4.45 | 4.55 | 2 | 1148.7 | 67.6% | 66.3% | 92.7% | 87.7% | 1,866.7 | 2,128.7 | 44,801 |
| 8875 | 19-Apr-73 | 1,063 | 175.05 | 4.62 | 4.72 | 2 | 1153.5 | 67.9% | 66.6% | 92.7% | 87.7% | 1,874.0 | 2,135.6 | 44,975 |
| 8876 | 20-Apr-73 | 1,056 | 175.11 | 5.46 | 5.56 | 2 | 1177.7 | 69.3% | 68.0% | 92.9% | 88.0% | 1,909.8 | 2,169.7 | 45,836 |
| 8877 | 21-Apr-73 | 1,045 | 175.24 | 6.78 | 6.88 | 2 | 1213.3 | 71.4% | 70.0% | 93.1% | 88.4% | 1,962.6 | 2,219.5 | 47,102 |
| 8878 | 22-Apr-73 | 1,046 | 175.46 | 6.70 | 6.80 | 2 | 1211.4 | 71.3% | 69.9% | 93.1% | 88.4% | 1,959.8 | 2,216.9 | 47,035 |
| 8879 | 23-Apr-73 | 1,046 | 175.77 | 6.70 | 6.80 | 2 | 1211.4 | 71.3% | 69.9% | 93.1% | 88.4% | 1,959.8 | 2,216.9 | 47,035 |
| 8880 | 24-Apr-73 | 1,042 | 176.10 | 7.17 | 7.27 | 2 | 1222.6 | 72.0% | 70.6% | 93.2% | 88.5% | 1,976.3 | 2,232.4 | 47,431 |
| 8881 | 25-Apr-73 | 1,038 | 176.44 | 7.56 | 7.66 | 2 | 1231.9 | 72.5% | 71.1% | 93.2% | 88.6% | 1,990.0 | 2,245.2 | 47,760 |
| 8882 | 26-Apr-73 | 1,030 | 176.79 | 8.47 | 8.57 | 2 | 1253.6 | 73.8% | 72.3% | 93.4% | 88.9% | 2,021.9 | 2,274.8 | 48,525 |
| 8883 | 27-Apr-73 | 1,026 | 177.15 | 8.86 | 8.96 | 2 | 1262.7 | 74.3% | 72.9% | 93.5% | 89.0% | 2,035.3 | 2,287.2 | 48,847 |
| 8884 | 28-Apr-73 | 1,030 | 177.51 | 8.50 | 8.60 | 2 | 1254.3 | 73.8% | 72.4% | 93.4% | 88.9% | 2,022.9 | 2,275.8 | 48,550 |
| 8885 | 29-Apr-73 | 1,034 | 177.85 | 8.01 | 8.11 | 2 | 1242.6 | 73.1% | 71.7% | 93.3% | 88.8% | 2,005.8 | 2,259.9 | 48,138 |
| 8886 | 30-Apr-73 | 1,045 | 178.16 | 6.80 | 6.90 | 2 | 1213.8 | 71.4% | 70.1% | 93.1% | 88.4% | 1,963.3 | 2,220.2 | 47,119 |
| 8887 | 01-May-73 | 1,052 | 178.43 | 5.93 | 6.03 | 2 | 1191.2 | 70.1% | 68.7% | 93.0% | 88.2% | 1,929.8 | 2,188.7 | 46,316 |
| 8888 | 02-May-73 | 1,056 | 178.67 | 5.45 | 5.55 | 2 | 1177.4 | 69.3% | 68.0% | 92.9% | 88.0% | 1,909.4 | 2,169.3 | 45,826 |
| 8889 | 03-May-73 | 1,075 | 178.87 | 2.87 | 2.97 | 2 | 1102.8 | 64.9% | 63.6% | 92.4% | 87.2% | 1,798.1 | 2,062.7 | 43,155 |
| 8890 | 04-May-73 | 1,071 | 179.03 | 3.44 | 3.54 | 2 | 1119.4 | 65.9% | 64.6% | 92.5% | 87.4% | 1,823.0 | 2,086.7 | 43,752 |
| 8891 | 05-May-73 | 1,071 | 179.16 | 3.47 | 3.57 | 2 | 1120.3 | 65.9% | 64.7% | 92.5% | 87.4% | 1,824.3 | 2,088.0 | 43,783 |
| 8892 | 06-May-73 | 1,071 | 179.28 | 3.51 | 3.61 | 2 | 1121.4 | 66.0% | 64.7% | 92.5% | 87.4% | 1,826.0 | 2,089.6 | 43,825 |
| 8893 | 07-May-73 | 1,072 | 179.37 | 3.26 | 3.36 | 2 | 1114.2 | 65.6% | 64.3% | 92.5% | 87.3% | 1,815.2 | 2,079.1 | 43,564 |

Little Bayou Meto
Flood Control Pumping Plant
1000-cfs (2 1750-hp)



| | G | H | I | J | K | L | M | N | O | P | Q | R | S | T |
|---|---|---|---|---|---|---|---|---|---|---|---|---|---|---|
| 1 | DATE | Q | h_sump | h_static | h_total | N | Bhp | E_Load | M_Load | M_eff | M_pf | P_In | S_In | W_e |
| 8894 | 08-May-73 | 1,075 | 179.44 | 2.86 | 2.96 | 2 | 1102.5 | 64.9% | 63.6% | 92.4% | 87.2% | 1,797.7 | 2,062.3 | 43,145 |
| 8895 | 09-May-73 | 1,074 | 179.50 | 2.97 | 3.07 | 2 | 1105.7 | 65.1% | 63.8% | 92.4% | 87.2% | 1,802.5 | 2,066.9 | 43,260 |
| 8896 | 10-May-73 | 1,072 | 179.53 | 3.26 | 3.36 | 2 | 1114.2 | 65.6% | 64.3% | 92.5% | 87.3% | 1,815.2 | 2,079.1 | 43,564 |
| 8897 | 11-May-73 | 1,069 | 179.56 | 3.71 | 3.81 | 2 | 1127.3 | 66.3% | 65.1% | 92.5% | 87.5% | 1,834.7 | 2,098.0 | 44,034 |
| 8898 | 12-May-73 | 1,076 | 179.57 | 2.74 | 2.84 | 2 | 1099.0 | 64.7% | 63.4% | 92.4% | 87.1% | 1,792.5 | 2,057.2 | 43,019 |
| 8899 | 13-May-73 | 1,080 | 179.58 | 2.16 | 2.26 | 2 | 1082.2 | 63.7% | 62.5% | 92.2% | 86.9% | 1,767.1 | 2,032.5 | 42,410 |
| 8900 | 14-May-73 | 1,080 | 179.57 | 2.03 | 2.13 | 2 | 1078.4 | 63.5% | 62.2% | 92.2% | 86.9% | 1,761.4 | 2,027.0 | 42,274 |
| 8901 | 15-May-73 | 1,079 | 179.57 | 2.31 | 2.41 | 2 | 1086.5 | 63.9% | 62.7% | 92.3% | 87.0% | 1,773.7 | 2,038.9 | 42,568 |
| 8902 | 16-May-73 | 1,076 | 179.55 | 2.76 | 2.86 | 2 | 1099.6 | 64.7% | 63.5% | 92.4% | 87.1% | 1,793.3 | 2,058.0 | 43,040 |
| 8903 | 17-May-73 | 1,073 | 179.53 | 3.10 | 3.20 | 2 | 1109.5 | 65.3% | 64.0% | 92.4% | 87.3% | 1,808.2 | 2,072.4 | 43,396 |
| 8904 | 18-May-73 | 1,072 | 179.51 | 3.28 | 3.38 | 2 | 1114.7 | 65.6% | 64.3% | 92.5% | 87.3% | 1,816.0 | 2,080.0 | 43,585 |
| 8905 | 19-May-73 | 1,078 | 179.48 | 2.40 | 2.50 | 2 | 1089.1 | 64.1% | 62.9% | 92.3% | 87.0% | 1,777.6 | 2,042.7 | 42,662 |
| 8906 | 20-May-73 | 1,084 | 179.44 | 1.31 | 1.41 | 2 | 1057.0 | 62.2% | 61.0% | 92.1% | 86.7% | 1,729.2 | 1,995.5 | 41,501 |
| 8907 | 21-May-73 | 1,085 | 179.41 | 1.16 | 1.26 | 2 | 1052.5 | 61.9% | 60.7% | 92.0% | 86.6% | 1,722.5 | 1,988.8 | 41,339 |
| 8908 | 22-May-73 | 1,087 | 179.37 | 0.84 | 0.94 | 2 | 1043.0 | 61.4% | 60.2% | 92.0% | 86.5% | 1,708.1 | 1,974.7 | 40,993 |
| 8909 | 23-May-73 | 1,089 | 179.35 | 0.50 | 0.60 | 2 | 1032.9 | 60.8% | 59.6% | 91.9% | 86.4% | 1,692.7 | 1,959.5 | 40,626 |
| 8910 | 24-May-73 | 1,091 | 179.34 | 0.15 | 0.25 | 2 | 1022.5 | 60.2% | 59.0% | 91.8% | 86.3% | 1,677.0 | 1,943.9 | 40,247 |
| 8911 | 25-May-73 | 1,092 | 179.27 | 0.00 | 0.10 | 2 | 1018.0 | 59.9% | 58.8% | 91.8% | 86.2% | 1,670.2 | 1,937.2 | 40,084 |
| 8912 | 26-May-73 | 1,092 | 179.13 | 0.00 | 0.10 | 2 | 1018.0 | 59.9% | 58.8% | 91.8% | 86.2% | 1,670.2 | 1,937.2 | 40,084 |
| 8913 | 27-May-73 | 1,092 | 178.99 | 0.00 | 0.10 | 2 | 1018.0 | 59.9% | 58.8% | 91.8% | 86.2% | 1,670.2 | 1,937.2 | 40,084 |
| 8914 | 28-May-73 | 1,092 | 178.79 | 0.00 | 0.10 | 2 | 1018.0 | 59.9% | 58.8% | 91.8% | 86.2% | 1,670.2 | 1,937.2 | 40,084 |
| 8915 | 29-May-73 | 1,092 | 178.58 | 0.00 | 0.10 | 2 | 1018.0 | 59.9% | 58.8% | 91.8% | 86.2% | 1,670.2 | 1,937.2 | 40,084 |
| 8916 | 30-May-73 | 1,092 | 178.33 | 0.00 | 0.10 | 2 | 1018.0 | 59.9% | 58.8% | 91.8% | 86.2% | 1,670.2 | 1,937.2 | 40,084 |
| 8917 | 31-May-73 | 1,092 | 178.04 | 0.00 | 0.10 | 2 | 1018.0 | 59.9% | 58.8% | 91.8% | 86.2% | 1,670.2 | 1,937.2 | 40,084 |
| 8918 | 01-Jun-73 | 1,092 | 177.65 | 0.00 | 0.10 | 2 | 1018.0 | 59.9% | 58.8% | 91.8% | 86.2% | 1,670.2 | 1,937.2 | 40,084 |
| 8919 | 02-Jun-73 | 1,092 | 177.18 | 0.00 | 0.10 | 2 | 1018.0 | 59.9% | 58.8% | 91.8% | 86.2% | 1,670.2 | 1,937.2 | 40,084 |
| 8920 | 03-Jun-73 | 1,092 | 176.69 | 0.00 | 0.10 | 2 | 1018.0 | 59.9% | 58.8% | 91.8% | 86.2% | 1,670.2 | 1,937.2 | 40,084 |
| 8921 | 04-Jun-73 | 1,092 | 176.23 | 0.00 | 0.10 | 2 | 1018.0 | 59.9% | 58.8% | 91.8% | 86.2% | 1,670.2 | 1,937.2 | 40,084 |
| 8922 | 05-Jun-73 | 1,092 | 175.86 | 0.00 | 0.10 | 2 | 1018.0 | 59.9% | 58.8% | 91.8% | 86.2% | 1,670.2 | 1,937.2 | 40,084 |
| 8923 | 06-Jun-73 | 1,085 | 175.85 | 1.25 | 1.35 | 2 | 1055.2 | 62.1% | 60.9% | 92.1% | 86.6% | 1,726.5 | 1,992.8 | 41,436 |
| 8924 | 07-Jun-73 | 1,084 | 175.86 | 1.41 | 1.51 | 2 | 1060.0 | 62.4% | 61.2% | 92.1% | 86.7% | 1,733.7 | 1,999.9 | 41,609 |
| 8925 | 08-Jun-73 | 1,080 | 175.86 | 2.02 | 2.12 | 2 | 1078.1 | 63.5% | 62.2% | 92.2% | 86.9% | 1,761.0 | 2,026.5 | 42,263 |
| 8926 | 09-Jun-73 | 1,051 | 175.85 | 6.03 | 6.13 | 2 | 1194.0 | 70.3% | 68.9% | 93.0% | 88.2% | 1,934.1 | 2,192.7 | 46,418 |
| 8927 | 10-Jun-73 | 1,049 | 175.83 | 6.33 | 6.43 | 2 | 1202.6 | 70.8% | 69.4% | 93.1% | 88.3% | 1,946.8 | 2,204.6 | 46,722 |
| 8928 | 11-Jun-73 | 1,049 | 175.79 | 6.36 | 6.46 | 2 | 1203.3 | 70.8% | 69.4% | 93.1% | 88.3% | 1,947.8 | 2,205.6 | 46,748 |
| 8929 | 12-Jun-73 | 1,084 | 175.75 | 1.36 | 1.46 | 2 | 1058.5 | 62.3% | 61.1% | 92.1% | 86.7% | 1,731.4 | 1,997.7 | 41,555 |
| 8930 | 13-Jun-73 | 1,086 | 175.69 | 1.10 | 1.20 | 2 | 1050.8 | 61.8% | 60.6% | 92.0% | 86.6% | 1,719.8 | 1,986.2 | 41,274 |
| 8931 | 14-Jun-73 | 1,086 | 175.62 | 1.01 | 1.11 | 2 | 1048.1 | 61.7% | 60.5% | 92.0% | 86.6% | 1,715.7 | 1,982.2 | 41,177 |
| 8932 | 15-Jun-73 | 1,086 | 175.55 | 1.08 | 1.18 | 2 | 1050.2 | 61.8% | 60.6% | 92.0% | 86.6% | 1,718.9 | 1,985.3 | 41,253 |

Little Bayou Meto
Flood Control Pumping Plant
1000-cfs (2 1750-hp)



| | G | H | I | J | K | L | M | N | O | P | Q | R | S | T |
|---|---|---|---|---|---|---|---|---|---|---|---|---|---|---|
| 1 | DATE | Q | h_sump | h_static | h_total | N | Bhp | E_Load | M_Load | M_eff | M_pf | P_In | S_In | W_e |
| 8933 | 16-Jun-73 | 1,087 | 175.47 | 0.84 | 0.94 | 2 | 1043.0 | 61.4% | 60.2% | 92.0% | 86.5% | 1,708.1 | 1,974.7 | 40,993 |
| 8934 | 17-Jun-73 | 1,087 | 175.39 | 0.92 | 1.02 | 2 | 1045.4 | 61.5% | 60.3% | 92.0% | 86.5% | 1,711.7 | 1,978.2 | 41,080 |
| 8935 | 18-Jun-73 | 1,088 | 175.30 | 0.71 | 0.81 | 2 | 1039.2 | 61.2% | 60.0% | 92.0% | 86.5% | 1,702.2 | 1,968.9 | 40,853 |
| 8936 | 19-Jun-73 | 1,091 | 175.22 | 0.24 | 0.34 | 2 | 1025.2 | 60.3% | 59.2% | 91.9% | 86.3% | 1,681.0 | 1,947.9 | 40,344 |
| 8937 | 20-Jun-73 | 1,092 | 175.13 | 0.05 | 0.15 | 2 | 1019.5 | 60.0% | 58.8% | 91.8% | 86.2% | 1,672.4 | 1,939.4 | 40,138 |
| 8938 | 21-Jun-73 | 1,092 | 175.06 | 0.00 | 0.10 | 2 | 1018.0 | 59.9% | 58.8% | 91.8% | 86.2% | 1,670.2 | 1,937.2 | 40,084 |
| 8939 | 22-Jun-73 | 1,092 | 174.57 | 0.00 | 0.10 | 2 | 1018.0 | 59.9% | 58.8% | 91.8% | 86.2% | 1,670.2 | 1,937.2 | 40,084 |
| 8940 | 23-Jun-73 | 1,092 | 173.76 | 0.00 | 0.10 | 2 | 1018.0 | 59.9% | 58.8% | 91.8% | 86.2% | 1,670.2 | 1,937.2 | 40,084 |
| 8941 | 24-Jun-73 | 1,092 | 172.66 | 0.00 | 0.10 | 2 | 1018.0 | 59.9% | 58.8% | 91.8% | 86.2% | 1,670.2 | 1,937.2 | 40,084 |
| 8942 | 25-Jun-73 | 1,092 | 171.62 | 0.00 | 0.10 | 2 | 1018.0 | 59.9% | 58.8% | 91.8% | 86.2% | 1,670.2 | 1,937.2 | 40,084 |
| 8943 | 26-Jun-73 | 1,091 | 171.04 | 0.16 | 0.26 | 2 | 1022.8 | 60.2% | 59.0% | 91.8% | 86.3% | 1,677.4 | 1,944.4 | 40,258 |
| 8944 | 27-Jun-73 | 1,089 | 170.04 | 0.47 | 0.57 | 2 | 1032.0 | 60.7% | 59.6% | 91.9% | 86.4% | 1,691.4 | 1,958.2 | 40,593 |
| 8945 | 28-Jun-73 | 1,078 | 167.64 | 2.41 | 2.51 | 2 | 1089.4 | 64.1% | 62.9% | 92.3% | 87.0% | 1,778.0 | 2,043.2 | 42,673 |
| 8946 | 29-Jun-73 | 0 | 162.82 | | 0.10 | 0 | 0.0 | 0.0% | 0.0% | | | | | |
| 8947 | 30-Jun-73 | 540 | 167.47 | 2.12 | 2.22 | 1 | 1081.0 | 63.6% | 62.4% | 92.2% | 86.9% | 882.7 | 1,015.4 | 21,184 |
| 8948 | 01-Jul-73 | 538 | 166.76 | 2.60 | 2.70 | 1 | 1095.0 | 64.4% | 63.2% | 92.3% | 87.1% | 893.2 | 1,025.6 | 21,436 |
| 8949 | 02-Jul-73 | 535 | 165.63 | 3.73 | 3.83 | 1 | 1127.8 | 66.4% | 65.1% | 92.6% | 87.5% | 917.8 | 1,049.4 | 22,027 |
| 8950 | 03-Jul-73 | 533 | 164.27 | 4.04 | 4.14 | 1 | 1136.9 | 66.9% | 65.6% | 92.6% | 87.6% | 924.5 | 1,055.9 | 22,189 |
| 8951 | 04-Jul-73 | 0 | 162.78 | | 0.10 | 0 | 0.0 | 0.0% | 0.0% | | | | | |
| 8952 | 05-Jul-73 | 0 | 166.05 | | 0.10 | 0 | 0.0 | 0.0% | 0.0% | | | | | |
| 8953 | 06-Jul-73 | 0 | 165.35 | | 0.10 | 0 | 0.0 | 0.0% | 0.0% | | | | | |
| 8954 | 07-Jul-73 | 0 | 164.40 | | 0.10 | 0 | 0.0 | 0.0% | 0.0% | | | | | |
| 8955 | 08-Jul-73 | 0 | 163.50 | | 0.10 | 0 | 0.0 | 0.0% | 0.0% | | | | | |
| 8956 | 09-Jul-73 | 0 | 163.42 | | 0.10 | 0 | 0.0 | 0.0% | 0.0% | | | | | |
| 8957 | 10-Jul-73 | 0 | 163.39 | | 0.10 | 0 | 0.0 | 0.0% | 0.0% | | | | | |
| 8958 | 11-Jul-73 | 0 | 163.36 | | 0.10 | 0 | 0.0 | 0.0% | 0.0% | | | | | |
| 8959 | 12-Jul-73 | 0 | 163.35 | | 0.10 | 0 | 0.0 | 0.0% | 0.0% | | | | | |
| 8960 | 13-Jul-73 | 0 | 163.35 | | 0.10 | 0 | 0.0 | 0.0% | 0.0% | | | | | |
| 8961 | 14-Jul-73 | 0 | 163.35 | | 0.10 | 0 | 0.0 | 0.0% | 0.0% | | | | | |
| 8962 | 15-Jul-73 | 0 | 163.35 | | 0.10 | 0 | 0.0 | 0.0% | 0.0% | | | | | |
| 8963 | 16-Jul-73 | 0 | 163.38 | | 0.10 | 0 | 0.0 | 0.0% | 0.0% | | | | | |
| 8964 | 17-Jul-73 | 0 | 163.36 | | 0.10 | 0 | 0.0 | 0.0% | 0.0% | | | | | |
| 8965 | 18-Jul-73 | 0 | 164.00 | | 0.10 | 0 | 0.0 | 0.0% | 0.0% | | | | | |
| 8966 | 19-Jul-73 | 0 | 164.70 | | 0.10 | 0 | 0.0 | 0.0% | 0.0% | | | | | |
| 8967 | 20-Jul-73 | 0 | 165.36 | | 0.10 | 0 | 0.0 | 0.0% | 0.0% | | | | | |
| 8968 | 21-Jul-73 | 0 | 165.94 | | 0.10 | 0 | 0.0 | 0.0% | 0.0% | | | | | |
| 8969 | 22-Jul-73 | 0 | 166.79 | | 0.10 | 0 | 0.0 | 0.0% | 0.0% | | | | | |
| 8970 | 23-Jul-73 | 0 | 166.83 | | 0.10 | 0 | 0.0 | 0.0% | 0.0% | | | | | |
| 8971 | 24-Jul-73 | 0 | 166.83 | | 0.10 | 0 | 0.0 | 0.0% | 0.0% | | | | | |

| | G | H | I | J | K | L | M | N | O | P | Q | R | S | T |
|---|---|---|---|---|---|---|---|---|---|---|---|---|---|---|
| 1 | DATE | Q | h_sump | h_static | h_total | N | Bhp | E_Load | M_Load | M_eff | M_pf | P_In | S_In | W_e |
| 8972 | 25-Jul-73 | 0 | 166.82 | | 0.10 | 0 | 0.0 | 0.0% | 0.0% | | | | | |
| 8973 | 26-Jul-73 | 0 | 166.81 | | 0.10 | 0 | 0.0 | 0.0% | 0.0% | | | | | |
| 8974 | 27-Jul-73 | 0 | 166.80 | | 0.10 | 0 | 0.0 | 0.0% | 0.0% | | | | | |
| 8975 | 28-Jul-73 | 0 | 166.30 | | 0.10 | 0 | 0.0 | 0.0% | 0.0% | | | | | |
| 8976 | 29-Jul-73 | 0 | 166.14 | | 0.10 | 0 | 0.0 | 0.0% | 0.0% | | | | | |
| 8977 | 30-Jul-73 | 0 | 166.14 | | 0.10 | 0 | 0.0 | 0.0% | 0.0% | | | | | |
| 8978 | 31-Jul-73 | 0 | 166.15 | | 0.10 | 0 | 0.0 | 0.0% | 0.0% | | | | | |
| 8979 | 01-Aug-73 | 0 | 166.02 | | 0.10 | 0 | 0.0 | 0.0% | 0.0% | | | | | |
| 8980 | 02-Aug-73 | 0 | 166.15 | | 0.10 | 0 | 0.0 | 0.0% | 0.0% | | | | | |
| 8981 | 03-Aug-73 | 0 | 166.22 | | 0.10 | 0 | 0.0 | 0.0% | 0.0% | | | | | |
| 8982 | 04-Aug-73 | 0 | 166.24 | | 0.10 | 0 | 0.0 | 0.0% | 0.0% | | | | | |
| 8983 | 05-Aug-73 | 0 | 166.17 | | 0.10 | 0 | 0.0 | 0.0% | 0.0% | | | | | |
| 8984 | 06-Aug-73 | 0 | 166.14 | | 0.10 | 0 | 0.0 | 0.0% | 0.0% | | | | | |
| 8985 | 07-Aug-73 | 0 | 166.02 | | 0.10 | 0 | 0.0 | 0.0% | 0.0% | | | | | |
| 8986 | 08-Aug-73 | 0 | 165.89 | | 0.10 | 0 | 0.0 | 0.0% | 0.0% | | | | | |
| 8987 | 09-Aug-73 | 0 | 165.20 | | 0.10 | 0 | 0.0 | 0.0% | 0.0% | | | | | |
| 8988 | 10-Aug-73 | 0 | 165.16 | | 0.10 | 0 | 0.0 | 0.0% | 0.0% | | | | | |
| 8989 | 11-Aug-73 | 0 | 164.89 | | 0.10 | 0 | 0.0 | 0.0% | 0.0% | | | | | |
| 8990 | 12-Aug-73 | 0 | 164.81 | | 0.10 | 0 | 0.0 | 0.0% | 0.0% | | | | | |
| 8991 | 13-Aug-73 | 0 | 164.77 | | 0.10 | 0 | 0.0 | 0.0% | 0.0% | | | | | |
| 8992 | 14-Aug-73 | 0 | 164.76 | | 0.10 | 0 | 0.0 | 0.0% | 0.0% | | | | | |
| 8993 | 15-Aug-73 | 0 | 165.08 | | 0.10 | 0 | 0.0 | 0.0% | 0.0% | | | | | |
| 8994 | 16-Aug-73 | 0 | 165.41 | | 0.10 | 0 | 0.0 | 0.0% | 0.0% | | | | | |
| 8995 | 17-Aug-73 | 0 | 165.65 | | 0.10 | 0 | 0.0 | 0.0% | 0.0% | | | | | |
| 8996 | 18-Aug-73 | 0 | 166.08 | | 0.10 | 0 | 0.0 | 0.0% | 0.0% | | | | | |
| 8997 | 19-Aug-73 | 0 | 166.17 | | 0.10 | 0 | 0.0 | 0.0% | 0.0% | | | | | |
| 8998 | 20-Aug-73 | 0 | 166.14 | | 0.10 | 0 | 0.0 | 0.0% | 0.0% | | | | | |
| 8999 | 21-Aug-73 | 0 | 166.14 | | 0.10 | 0 | 0.0 | 0.0% | 0.0% | | | | | |
| 9000 | 22-Aug-73 | 0 | 165.75 | | 0.10 | 0 | 0.0 | 0.0% | 0.0% | | | | | |
| 9001 | 23-Aug-73 | 0 | 165.05 | | 0.10 | 0 | 0.0 | 0.0% | 0.0% | | | | | |
| 9002 | 24-Aug-73 | 0 | 164.75 | | 0.10 | 0 | 0.0 | 0.0% | 0.0% | | | | | |
| 9003 | 25-Aug-73 | 0 | 163.81 | | 0.10 | 0 | 0.0 | 0.0% | 0.0% | | | | | |
| 9004 | 26-Aug-73 | 0 | 163.62 | | 0.10 | 0 | 0.0 | 0.0% | 0.0% | | | | | |
| 9005 | 27-Aug-73 | 0 | 163.46 | | 0.10 | 0 | 0.0 | 0.0% | 0.0% | | | | | |
| 9006 | 28-Aug-73 | 0 | 163.30 | | 0.10 | 0 | 0.0 | 0.0% | 0.0% | | | | | |
| 9007 | 29-Aug-73 | 0 | 163.18 | | 0.10 | 0 | 0.0 | 0.0% | 0.0% | | | | | |
| 9008 | 30-Aug-73 | 0 | 163.13 | | 0.10 | 0 | 0.0 | 0.0% | 0.0% | | | | | |
| 9009 | 31-Aug-73 | 0 | 163.11 | | 0.10 | 0 | 0.0 | 0.0% | 0.0% | | | | | |
| 9010 | 01-Sep-73 | 0 | 163.10 | | 0.10 | 0 | 0.0 | 0.0% | 0.0% | | | | | |

Little Bayou Meto
Flood Control Pumping Plant
1000-cfs (2 1750-hp)



| | G | H | I | J | K | L | M | N | O | P | Q | R | S | T |
|---|---|---|---|---|---|---|---|---|---|---|---|---|---|---|
| 1 | DATE | Q | h_sump | h_static | h_total | N | Bhp | E_Load | M_Load | M_eff | M_pf | P_In | S_In | W_e |
| 9011 | 02-Sep-73 | 0 | 163.10 | | 0.10 | 0 | 0.0 | 0.0% | 0.0% | | | | | |
| 9012 | 03-Sep-73 | 0 | 163.10 | | 0.10 | 0 | 0.0 | 0.0% | 0.0% | | | | | |
| 9013 | 04-Sep-73 | 0 | 163.10 | | 0.10 | 0 | 0.0 | 0.0% | 0.0% | | | | | |
| 9014 | 05-Sep-73 | 0 | 163.52 | | 0.10 | 0 | 0.0 | 0.0% | 0.0% | | | | | |
| 9015 | 06-Sep-73 | 0 | 164.35 | | 0.10 | 0 | 0.0 | 0.0% | 0.0% | | | | | |
| 9016 | 07-Sep-73 | 0 | 165.04 | | 0.10 | 0 | 0.0 | 0.0% | 0.0% | | | | | |
| 9017 | 08-Sep-73 | 0 | 165.43 | | 0.10 | 0 | 0.0 | 0.0% | 0.0% | | | | | |
| 9018 | 09-Sep-73 | 0 | 165.84 | | 0.10 | 0 | 0.0 | 0.0% | 0.0% | | | | | |
| 9019 | 10-Sep-73 | 0 | 166.04 | | 0.10 | 0 | 0.0 | 0.0% | 0.0% | | | | | |
| 9020 | 11-Sep-73 | 0 | 166.07 | | 0.10 | 0 | 0.0 | 0.0% | 0.0% | | | | | |
| 9021 | 12-Sep-73 | 0 | 166.25 | | 0.10 | 0 | 0.0 | 0.0% | 0.0% | | | | | |
| 9022 | 13-Sep-73 | 0 | 166.26 | | 0.10 | 0 | 0.0 | 0.0% | 0.0% | | | | | |
| 9023 | 14-Sep-73 | 0 | 166.22 | | 0.10 | 0 | 0.0 | 0.0% | 0.0% | | | | | |
| 9024 | 15-Sep-73 | 0 | 166.20 | | 0.10 | 0 | 0.0 | 0.0% | 0.0% | | | | | |
| 9025 | 16-Sep-73 | 0 | 166.51 | | 0.10 | 0 | 0.0 | 0.0% | 0.0% | | | | | |
| 9026 | 17-Sep-73 | 0 | 166.50 | | 0.10 | 0 | 0.0 | 0.0% | 0.0% | | | | | |
| 9027 | 18-Sep-73 | 0 | 166.50 | | 0.10 | 0 | 0.0 | 0.0% | 0.0% | | | | | |
| 9028 | 19-Sep-73 | 0 | 166.37 | | 0.10 | 0 | 0.0 | 0.0% | 0.0% | | | | | |
| 9029 | 20-Sep-73 | 0 | 166.10 | | 0.10 | 0 | 0.0 | 0.0% | 0.0% | | | | | |
| 9030 | 21-Sep-73 | 0 | 165.80 | | 0.10 | 0 | 0.0 | 0.0% | 0.0% | | | | | |
| 9031 | 22-Sep-73 | 0 | 165.45 | | 0.10 | 0 | 0.0 | 0.0% | 0.0% | | | | | |
| 9032 | 23-Sep-73 | 0 | 165.10 | | 0.10 | 0 | 0.0 | 0.0% | 0.0% | | | | | |
| 9033 | 24-Sep-73 | 0 | 164.89 | | 0.10 | 0 | 0.0 | 0.0% | 0.0% | | | | | |
| 9034 | 25-Sep-73 | 0 | 164.81 | | 0.10 | 0 | 0.0 | 0.0% | 0.0% | | | | | |
| 9035 | 26-Sep-73 | 0 | 164.77 | | 0.10 | 0 | 0.0 | 0.0% | 0.0% | | | | | |
| 9036 | 27-Sep-73 | 0 | 165.06 | | 0.10 | 0 | 0.0 | 0.0% | 0.0% | | | | | |
| 9037 | 28-Sep-73 | 0 | 165.12 | | 0.10 | 0 | 0.0 | 0.0% | 0.0% | | | | | |
| 9038 | 29-Sep-73 | 0 | 165.10 | | 0.10 | 0 | 0.0 | 0.0% | 0.0% | | | | | |
| 9039 | 30-Sep-73 | 0 | 165.10 | | 0.10 | 0 | 0.0 | 0.0% | 0.0% | | | | | |
| 9040 | 01-Oct-73 | 0 | 165.10 | | 0.10 | 0 | 0.0 | 0.0% | 0.0% | | | | | |
| 9041 | 02-Oct-73 | 0 | 165.10 | | 0.10 | 0 | 0.0 | 0.0% | 0.0% | | | | | |
| 9042 | 03-Oct-73 | 0 | 165.44 | | 0.10 | 0 | 0.0 | 0.0% | 0.0% | | | | | |
| 9043 | 04-Oct-73 | 0 | 165.49 | | 0.10 | 0 | 0.0 | 0.0% | 0.0% | | | | | |
| 9044 | 05-Oct-73 | 0 | 165.69 | | 0.10 | 0 | 0.0 | 0.0% | 0.0% | | | | | |
| 9045 | 06-Oct-73 | 0 | 165.82 | | 0.10 | 0 | 0.0 | 0.0% | 0.0% | | | | | |
| 9046 | 07-Oct-73 | 0 | 165.81 | | 0.10 | 0 | 0.0 | 0.0% | 0.0% | | | | | |
| 9047 | 08-Oct-73 | 0 | 165.80 | | 0.10 | 0 | 0.0 | 0.0% | 0.0% | | | | | |
| 9048 | 09-Oct-73 | 0 | 166.11 | | 0.10 | 0 | 0.0 | 0.0% | 0.0% | | | | | |
| 9049 | 10-Oct-73 | 0 | 166.15 | | 0.10 | 0 | 0.0 | 0.0% | 0.0% | | | | | |

Little Bayou Meto
Flood Control Pumping Plant
1000-cfs (2 1750-hp)



| | G | H | I | J | K | L | M | N | O | P | Q | R | S | T |
|---|---|---|---|---|---|---|---|---|---|---|---|---|---|---|
| 1 | DATE | Q | h_sump | h_static | h_total | N | Bhp | E_Load | M_Load | M_eff | M_pf | P_In | S_In | W_e |
| 9050 | 11-Oct-73 | 1,089 | 167.53 | 0.51 | 0.61 | 2 | 1033.2 | 60.8% | 59.6% | 91.9% | 86.4% | 1,693.2 | 1,960.0 | 40,637 |
| 9051 | 12-Oct-73 | 0 | 159.01 | | 0.10 | 0 | 0.0 | 0.0% | 0.0% | | | | | |
| 9052 | 13-Oct-73 | 0 | 159.01 | | 0.10 | 0 | 0.0 | 0.0% | 0.0% | | | | | |
| 9053 | 14-Oct-73 | 0 | 159.01 | | 0.10 | 0 | 0.0 | 0.0% | 0.0% | | | | | |
| 9054 | 15-Oct-73 | 0 | 159.01 | | 0.10 | 0 | 0.0 | 0.0% | 0.0% | | | | | |
| 9055 | 16-Oct-73 | 0 | 159.03 | | 0.10 | 0 | 0.0 | 0.0% | 0.0% | | | | | |
| 9056 | 17-Oct-73 | 0 | 166.10 | | 0.10 | 0 | 0.0 | 0.0% | 0.0% | | | | | |
| 9057 | 18-Oct-73 | 1,043 | 170.13 | 6.97 | 7.07 | 2 | 1217.8 | 71.7% | 70.3% | 93.2% | 88.5% | 1,969.3 | 2,225.8 | 47,263 |
| 9058 | 19-Oct-73 | 1,037 | 169.44 | 7.67 | 7.77 | 2 | 1234.5 | 72.7% | 71.2% | 93.3% | 88.7% | 1,993.9 | 2,248.8 | 47,852 |
| 9059 | 20-Oct-73 | 1,033 | 168.95 | 8.16 | 8.26 | 2 | 1246.2 | 73.3% | 71.9% | 93.3% | 88.8% | 2,011.0 | 2,264.7 | 48,264 |
| 9060 | 21-Oct-73 | 1,029 | 168.55 | 8.56 | 8.66 | 2 | 1255.7 | 73.9% | 72.5% | 93.4% | 88.9% | 2,025.0 | 2,277.7 | 48,600 |
| 9061 | 22-Oct-73 | 1,030 | 168.03 | 8.44 | 8.54 | 2 | 1252.9 | 73.7% | 72.3% | 93.4% | 88.9% | 2,020.8 | 2,273.8 | 48,499 |
| 9062 | 23-Oct-73 | 1,024 | 167.08 | 9.08 | 9.18 | 2 | 1267.9 | 74.6% | 73.2% | 93.5% | 89.0% | 2,042.8 | 2,294.2 | 49,028 |
| 9063 | 24-Oct-73 | 1,011 | 165.26 | 10.48 | 10.58 | 2 | 1300.6 | 76.5% | 75.1% | 93.7% | 89.4% | 2,090.8 | 2,338.5 | 50,178 |
| 9064 | 25-Oct-73 | 0 | 162.26 | | 0.10 | 0 | 0.0 | 0.0% | 0.0% | | | | | |
| 9065 | 26-Oct-73 | 1,044 | 168.16 | 6.88 | 6.98 | 2 | 1215.7 | 71.6% | 70.2% | 93.1% | 88.5% | 1,966.1 | 2,222.8 | 47,187 |
| 9066 | 27-Oct-73 | 1,016 | 164.26 | 10.01 | 10.11 | 2 | 1289.6 | 75.9% | 74.4% | 93.6% | 89.3% | 2,074.6 | 2,323.5 | 49,791 |
| 9067 | 28-Oct-73 | 0 | 159.03 | | 0.10 | 0 | 0.0 | 0.0% | 0.0% | | | | | |
| 9068 | 29-Oct-73 | 0 | 164.52 | | 0.10 | 0 | 0.0 | 0.0% | 0.0% | | | | | |
| 9069 | 30-Oct-73 | 536 | 167.36 | 3.38 | 3.48 | 1 | 1117.6 | 65.8% | 64.5% | 92.5% | 87.3% | 910.2 | 1,042.1 | 21,845 |
| 9070 | 31-Oct-73 | 521 | 164.74 | 7.05 | 7.15 | 1 | 1219.7 | 71.8% | 70.4% | 93.2% | 88.5% | 986.0 | 1,114.2 | 23,665 |
| 9071 | 01-Nov-73 | 0 | 161.58 | | 0.10 | 0 | 0.0 | 0.0% | 0.0% | | | | | |
| 9072 | 02-Nov-73 | 0 | 164.69 | | 0.10 | 0 | 0.0 | 0.0% | 0.0% | | | | | |
| 9073 | 03-Nov-73 | 532 | 167.43 | 4.53 | 4.63 | 1 | 1151.0 | 67.7% | 66.4% | 92.7% | 87.7% | 935.1 | 1,066.0 | 22,441 |
| 9074 | 04-Nov-73 | 526 | 166.26 | 6.04 | 6.14 | 1 | 1194.3 | 70.3% | 68.9% | 93.0% | 88.2% | 967.3 | 1,096.5 | 23,214 |
| 9075 | 05-Nov-73 | 521 | 165.20 | 7.10 | 7.20 | 1 | 1220.9 | 71.9% | 70.5% | 93.2% | 88.5% | 986.9 | 1,115.0 | 23,686 |
| 9076 | 06-Nov-73 | 517 | 164.21 | 8.09 | 8.19 | 1 | 1244.5 | 73.2% | 71.8% | 93.3% | 88.8% | 1,004.3 | 1,131.2 | 24,103 |
| 9077 | 07-Nov-73 | 518 | 164.61 | 7.69 | 7.79 | 1 | 1235.0 | 72.7% | 71.3% | 93.3% | 88.7% | 997.3 | 1,124.7 | 23,935 |
| 9078 | 08-Nov-73 | 543 | 167.30 | 1.01 | 1.11 | 1 | 1048.1 | 61.7% | 60.5% | 92.0% | 86.6% | 857.9 | 991.1 | 20,589 |
| 9079 | 09-Nov-73 | 1,088 | 169.59 | 0.69 | 0.79 | 2 | 1038.6 | 61.1% | 59.9% | 92.0% | 86.4% | 1,701.3 | 1,968.0 | 40,831 |
| 9080 | 10-Nov-73 | 1,089 | 169.25 | 0.57 | 0.67 | 2 | 1035.0 | 60.9% | 59.7% | 91.9% | 86.4% | 1,695.9 | 1,962.7 | 40,702 |
| 9081 | 11-Nov-73 | 1,092 | 168.31 | 0.00 | 0.10 | 2 | 1018.0 | 59.9% | 58.8% | 91.8% | 86.2% | 1,670.2 | 1,937.2 | 40,084 |
| 9082 | 12-Nov-73 | 1,091 | 167.93 | 0.11 | 0.21 | 2 | 1021.3 | 60.1% | 58.9% | 91.8% | 86.3% | 1,675.1 | 1,942.1 | 40,203 |
| 9083 | 13-Nov-73 | 1,092 | 163.78 | 0.00 | 0.10 | 2 | 1018.0 | 59.9% | 58.8% | 91.8% | 86.2% | 1,670.2 | 1,937.2 | 40,084 |
| 9084 | 14-Nov-73 | 0 | 161.18 | | 0.10 | 0 | 0.0 | 0.0% | 0.0% | | | | | |
| 9085 | 15-Nov-73 | 0 | 164.40 | | 0.10 | 0 | 0.0 | 0.0% | 0.0% | | | | | |
| 9086 | 16-Nov-73 | 0 | 164.33 | | 0.10 | 0 | 0.0 | 0.0% | 0.0% | | | | | |
| 9087 | 17-Nov-73 | 0 | 164.26 | | 0.10 | 0 | 0.0 | 0.0% | 0.0% | | | | | |
| 9088 | 18-Nov-73 | 0 | 164.20 | | 0.10 | 0 | 0.0 | 0.0% | 0.0% | | | | | |

Little Bayou Meto
Flood Control Pumping Plant
1000-cfs (2 1750-hp)



| | G | H | I | J | K | L | M | N | O | P | Q | R | S | T |
|---|---|---|---|---|---|---|---|---|---|---|---|---|---|---|
| 1 | DATE | Q | h_sump | h_static | h_total | N | Bhp | E_Load | M_Load | M_eff | M_pf | P_In | S_In | W_e |
| 17903 | | Q | Period-of-Record Pumping Station Operating Statistics | | | | | | | | | | | |
| 17904 | DATE | (kcfs) | h_sump | h_static | h_total | N | Bhp | E_Load | M_Load | M_eff | M_pf | P_In | S_In | W_e |
| 17905 | 357.9 | (cfs) | (ft) | (ft) | (ft) | | (hp) | | | | | (kW) | (kVA) | (MWh) |
| 17906 | SUM/COUNT | 5,898.9 | N/A | N/A | N/A | N/A | N/A | N/A | N/A | N/A | N/A | N/A | N/A | 233,453 |
| 17907 | MIN | 0.0 | 159.0 | 0.0 | 0.1 | 0.0 | 0.0 | 0.0% | 0.0% | 91.8% | 86.2% | 835.1 | 968.6 | 20.04 |
| 17908 | AVG | 329.6 | 165.6 | 2.3 | 0.9 | 0.6 | 362.4 | 21.3% | 20.9% | 92.2% | 87.0% | 1,625.8 | 1,867.8 | 39.02 |
| 17909 | MAX | 1,092.0 | 179.6 | 20.1 | 20.2 | 2.0 | 1,488.3 | 87.6% | 85.9% | 94.0% | 90.5% | 2,383.6 | 2,632.9 | 57.21 |
| 17910 | | | | | | | | | | | | | | |
| 17911 | 17897 | = No. of days pumped over POR | | | | | | | | | | | | |
| 17912 | 429528 | = No. of hours pumped over POR | | | | | | | | | | | | |
| 17913 | 50.00 | = Duration of POR in years | | | | | | | | | | | | |
| 17914 | 4.1% | = Days pumped per year as a percentage | | | | | | | | | | | | |

**Cell:** H17904
**Comment:** Total flow (in SUM/COUNT line) over the POR of pump station in 1000's of cfs

**Cell:** G17905
**Comment:** Average number of hours pumped annually over the POR

**Cell:** H17905
**Comment:** Min, avg, and max flows of pump station over the POR in cfs

**Cell:** J17905
**Comment:** Hydraulic static head is the negative of mechanical static head

**Cell:** L17905
**Comment:** Number of pumps operating

**Cell:** M17905
**Comment:** Pump brake hp

**Cell:** N17905
**Comment:** Diesel engine load as a percentage

**Cell:** O17905
**Comment:** Electric motor load as a percentage

**Cell:** P17905
**Comment:** Electric motor efficiency as a function of M_load

**Cell:** Q17905
**Comment:** Electric motor power factor as a function of M_load

**Cell:** R17905
**Comment:** Power demand in kW of pumping station

**Cell:** S17905
**Comment:** Power demand in kVA of pumping plant (accounts for power factor)

Little Bayou Meto
Flood Control Pumping Plant
3000-cfs (3 4000-hp)



| | G | H | I | J | K | L | M | N | O | P | Q | R | S | T |
|---|---|---|---|---|---|---|---|---|---|---|---|---|---|---|
| 1 | DATE | Q | h_sump | h_static | h_total | N | Bhp | E_Load | M_Load | M_eff | M_pf | P_In | S_In | W_e |
| 8704 | 30-Oct-72 | 0 | 164.67 | | 0.10 | 0 | 0.0 | 0.0% | 0.0% | | | | | |
| 8705 | 31-Oct-72 | 0 | 164.77 | | 0.10 | 0 | 0.0 | 0.0% | 0.0% | | | | | |
| 8706 | 01-Nov-72 | 0 | 165.41 | | 0.10 | 0 | 0.0 | 0.0% | 0.0% | | | | | |
| 8707 | 02-Nov-72 | 1,225 | 167.20 | 0.30 | 0.40 | 2 | 1027.0 | 32.1% | 25.9% | 86.5% | 76.0% | 1,788.3 | 2,354.2 | 42,918 |
| 8708 | 03-Nov-72 | 3,633 | 168.22 | 1.60 | 1.70 | 7 | 1065.6 | 33.3% | 26.9% | 86.7% | 76.3% | 6,478.5 | 8,486.4 | 155,484 |
| 8709 | 04-Nov-72 | 0 | 159.05 | | 0.10 | 0 | 0.0 | 0.0% | 0.0% | | | | | |
| 8710 | 05-Nov-72 | 3,642 | 170.92 | 1.21 | 1.31 | 7 | 1054.0 | 32.9% | 26.6% | 86.7% | 76.2% | 6,412.7 | 8,412.7 | 153,906 |
| 8711 | 06-Nov-72 | 0 | 159.01 | | 0.10 | 0 | 0.0 | 0.0% | 0.0% | | | | | |
| 8712 | 07-Nov-72 | 3,676 | 170.74 | 0.23 | 0.33 | 7 | 1024.9 | 32.0% | 25.9% | 86.5% | 75.9% | 6,247.0 | 8,226.2 | 149,929 |
| 8713 | 08-Nov-72 | 0 | 159.03 | | 0.10 | 0 | 0.0 | 0.0% | 0.0% | | | | | |
| 8714 | 09-Nov-72 | 3,684 | 171.01 | 0.00 | 0.10 | 7 | 1018.0 | 31.8% | 25.7% | 86.5% | 75.9% | 6,208.1 | 8,182.1 | 148,993 |
| 8715 | 10-Nov-72 | 3,583 | 167.00 | 3.74 | 3.84 | 7 | 1128.1 | 35.2% | 28.5% | 87.1% | 77.0% | 6,831.1 | 8,877.0 | 163,946 |
| 8716 | 11-Nov-72 | 3,507 | 164.05 | 6.46 | 6.56 | 7 | 1205.7 | 37.6% | 30.4% | 87.5% | 77.7% | 7,264.8 | 9,348.4 | 174,355 |
| 8717 | 12-Nov-72 | 0 | 162.13 | | 0.10 | 0 | 0.0 | 0.0% | 0.0% | | | | | |
| 8718 | 13-Nov-72 | 3,684 | 171.64 | 0.00 | 0.10 | 7 | 1018.0 | 31.8% | 25.7% | 86.5% | 75.9% | 6,208.1 | 8,182.1 | 148,993 |
| 8719 | 14-Nov-72 | 3,684 | 170.88 | 0.00 | 0.10 | 7 | 1018.0 | 31.8% | 25.7% | 86.5% | 75.9% | 6,208.1 | 8,182.1 | 148,993 |
| 8720 | 15-Nov-72 | 3,612 | 168.67 | 2.53 | 2.63 | 7 | 1092.9 | 34.1% | 27.6% | 86.9% | 76.6% | 6,632.8 | 8,658.1 | 159,187 |
| 8721 | 16-Nov-72 | 0 | 162.63 | | 0.10 | 0 | 0.0 | 0.0% | 0.0% | | | | | |
| 8722 | 17-Nov-72 | 3,684 | 172.20 | 0.00 | 0.10 | 7 | 1018.0 | 31.8% | 25.7% | 86.5% | 75.9% | 6,208.1 | 8,182.1 | 148,993 |
| 8723 | 18-Nov-72 | 3,624 | 170.16 | 1.97 | 2.07 | 7 | 1076.6 | 33.6% | 27.2% | 86.8% | 76.4% | 6,540.7 | 8,555.8 | 156,977 |
| 8724 | 19-Nov-72 | 0 | 159.08 | | 0.10 | 0 | 0.0 | 0.0% | 0.0% | | | | | |
| 8725 | 20-Nov-72 | 3,639 | 171.32 | 1.32 | 1.42 | 7 | 1057.3 | 33.0% | 26.7% | 86.7% | 76.3% | 6,431.3 | 8,433.6 | 154,351 |
| 8726 | 21-Nov-72 | 0 | 161.24 | | 0.10 | 0 | 0.0 | 0.0% | 0.0% | | | | | |
| 8727 | 22-Nov-72 | 3,631 | 171.50 | 1.65 | 1.75 | 7 | 1067.1 | 33.3% | 26.9% | 86.7% | 76.4% | 6,486.9 | 8,495.8 | 155,686 |
| 8728 | 23-Nov-72 | 0 | 162.75 | | 0.10 | 0 | 0.0 | 0.0% | 0.0% | | | | | |
| 8729 | 24-Nov-72 | 3,645 | 171.52 | 1.12 | 1.22 | 7 | 1051.4 | 32.8% | 26.5% | 86.6% | 76.2% | 6,397.5 | 8,395.7 | 153,541 |
| 8730 | 25-Nov-72 | 0 | 160.43 | | 0.10 | 0 | 0.0 | 0.0% | 0.0% | | | | | |
| 8731 | 26-Nov-72 | 3,628 | 170.84 | 1.80 | 1.90 | 7 | 1071.6 | 33.4% | 27.1% | 86.8% | 76.4% | 6,512.2 | 8,524.0 | 156,293 |
| 8732 | 27-Nov-72 | 0 | 159.02 | | 0.10 | 0 | 0.0 | 0.0% | 0.0% | | | | | |
| 8733 | 28-Nov-72 | 3,633 | 170.36 | 1.60 | 1.70 | 7 | 1065.6 | 33.3% | 26.9% | 86.7% | 76.3% | 6,478.5 | 8,486.4 | 155,484 |
| 8734 | 29-Nov-72 | 0 | 159.02 | | 0.10 | 0 | 0.0 | 0.0% | 0.0% | | | | | |
| 8735 | 30-Nov-72 | 3,653 | 169.84 | 0.90 | 1.00 | 7 | 1044.8 | 32.6% | 26.4% | 86.6% | 76.1% | 6,360.4 | 8,354.0 | 152,649 |
| 8736 | 01-Dec-72 | 0 | 159.01 | | 0.10 | 0 | 0.0 | 0.0% | 0.0% | | | | | |
| 8737 | 02-Dec-72 | 0 | 159.01 | | 0.10 | 0 | 0.0 | 0.0% | 0.0% | | | | | |
| 8738 | 03-Dec-72 | 0 | 159.01 | | 0.10 | 0 | 0.0 | 0.0% | 0.0% | | | | | |
| 8739 | 04-Dec-72 | 0 | 159.01 | | 0.10 | 0 | 0.0 | 0.0% | 0.0% | | | | | |
| 8740 | 05-Dec-72 | 0 | 159.01 | | 0.10 | 0 | 0.0 | 0.0% | 0.0% | | | | | |
| 8741 | 06-Dec-72 | 0 | 159.01 | | 0.10 | 0 | 0.0 | 0.0% | 0.0% | | | | | |

Little Bayou Meto
Flood Control Pumping Plant
3000-cfs (3 4000-hp)



| | G | H | I | J | K | L | M | N | O | P | Q | R | S | T |
|---|---|---|---|---|---|---|---|---|---|---|---|---|---|---|
| 1 | DATE | Q | h_sump | h_static | h_total | N | Bhp | E_Load | M_Load | M_eff | M_pf | P_In | S_In | W_e |
| 8742 | 07-Dec-72 | 0 | 159.01 | | 0.10 | 0 | 0.0 | 0.0% | 0.0% | | | | | |
| 8743 | 08-Dec-72 | 0 | 159.01 | | 0.10 | 0 | 0.0 | 0.0% | 0.0% | | | | | |
| 8744 | 09-Dec-72 | 0 | 159.01 | | 0.10 | 0 | 0.0 | 0.0% | 0.0% | | | | | |
| 8745 | 10-Dec-72 | 0 | 159.01 | | 0.10 | 0 | 0.0 | 0.0% | 0.0% | | | | | |
| 8746 | 11-Dec-72 | 0 | 159.03 | | 0.10 | 0 | 0.0 | 0.0% | 0.0% | | | | | |
| 8747 | 12-Dec-72 | 3,684 | 169.85 | 0.00 | 0.10 | 7 | 1018.0 | 31.8% | 25.7% | 86.5% | 75.9% | 6,208.1 | 8,182.1 | 148,993 |
| 8748 | 13-Dec-72 | 3,602 | 166.64 | 2.95 | 3.05 | 7 | 1105.1 | 34.5% | 27.9% | 86.9% | 76.7% | 6,701.7 | 8,734.5 | 160,841 |
| 8749 | 14-Dec-72 | 3,625 | 167.64 | 1.94 | 2.04 | 7 | 1075.7 | 33.6% | 27.2% | 86.8% | 76.4% | 6,535.8 | 8,550.3 | 156,858 |
| 8750 | 15-Dec-72 | 3,684 | 169.93 | 0.00 | 0.10 | 7 | 1018.0 | 31.8% | 25.7% | 86.5% | 75.9% | 6,208.1 | 8,182.1 | 148,993 |
| 8751 | 16-Dec-72 | 3,684 | 170.34 | 0.00 | 0.10 | 7 | 1018.0 | 31.8% | 25.7% | 86.5% | 75.9% | 6,208.1 | 8,182.1 | 148,993 |
| 8752 | 17-Dec-72 | 3,684 | 170.62 | 0.00 | 0.10 | 7 | 1018.0 | 31.8% | 25.7% | 86.5% | 75.9% | 6,208.1 | 8,182.1 | 148,993 |
| 8753 | 18-Dec-72 | 3,684 | 170.61 | 0.00 | 0.10 | 7 | 1018.0 | 31.8% | 25.7% | 86.5% | 75.9% | 6,208.1 | 8,182.1 | 148,993 |
| 8754 | 19-Dec-72 | 3,684 | 170.61 | 0.00 | 0.10 | 7 | 1018.0 | 31.8% | 25.7% | 86.5% | 75.9% | 6,208.1 | 8,182.1 | 148,993 |
| 8755 | 20-Dec-72 | 3,680 | 170.85 | 0.12 | 0.22 | 7 | 1021.6 | 31.9% | 25.8% | 86.5% | 75.9% | 6,228.4 | 8,205.1 | 149,482 |
| 8756 | 21-Dec-72 | 3,684 | 170.93 | 0.00 | 0.10 | 7 | 1018.0 | 31.8% | 25.7% | 86.5% | 75.9% | 6,208.1 | 8,182.1 | 148,993 |
| 8757 | 22-Dec-72 | 3,684 | 170.49 | 0.00 | 0.10 | 7 | 1018.0 | 31.8% | 25.7% | 86.5% | 75.9% | 6,208.1 | 8,182.1 | 148,993 |
| 8758 | 23-Dec-72 | 3,645 | 168.47 | 1.11 | 1.21 | 7 | 1051.1 | 32.8% | 26.5% | 86.6% | 76.2% | 6,395.9 | 8,393.8 | 153,500 |
| 8759 | 24-Dec-72 | 0 | 162.18 | | 0.10 | 0 | 0.0 | 0.0% | 0.0% | | | | | |
| 8760 | 25-Dec-72 | 3,684 | 169.88 | 0.00 | 0.10 | 7 | 1018.0 | 31.8% | 25.7% | 86.5% | 75.9% | 6,208.1 | 8,182.1 | 148,993 |
| 8761 | 26-Dec-72 | 0 | 159.54 | | 0.10 | 0 | 0.0 | 0.0% | 0.0% | | | | | |
| 8762 | 27-Dec-72 | 3,684 | 168.79 | 0.00 | 0.10 | 7 | 1018.0 | 31.8% | 25.7% | 86.5% | 75.9% | 6,208.1 | 8,182.1 | 148,993 |
| 8763 | 28-Dec-72 | 0 | 159.05 | | 0.10 | 0 | 0.0 | 0.0% | 0.0% | | | | | |
| 8764 | 29-Dec-72 | 3,684 | 168.43 | 0.00 | 0.10 | 7 | 1018.0 | 31.8% | 25.7% | 86.5% | 75.9% | 6,208.1 | 8,182.1 | 148,993 |
| 8765 | 30-Dec-72 | 0 | 159.01 | | 0.10 | 0 | 0.0 | 0.0% | 0.0% | | | | | |
| 8766 | 31-Dec-72 | 3,684 | 168.33 | 0.00 | 0.10 | 7 | 1018.0 | 31.8% | 25.7% | 86.5% | 75.9% | 6,208.1 | 8,182.1 | 148,993 |
| 8767 | 01-Jan-73 | 0 | 159.01 | | 0.10 | 0 | 0.0 | 0.0% | 0.0% | | | | | |
| 8768 | 02-Jan-73 | 0 | 159.01 | | 0.10 | 0 | 0.0 | 0.0% | 0.0% | | | | | |
| 8769 | 03-Jan-73 | 0 | 159.01 | | 0.10 | 0 | 0.0 | 0.0% | 0.0% | | | | | |
| 8770 | 04-Jan-73 | 0 | 159.01 | | 0.10 | 0 | 0.0 | 0.0% | 0.0% | | | | | |
| 8771 | 05-Jan-73 | 0 | 159.01 | | 0.10 | 0 | 0.0 | 0.0% | 0.0% | | | | | |
| 8772 | 06-Jan-73 | 0 | 159.01 | | 0.10 | 0 | 0.0 | 0.0% | 0.0% | | | | | |
| 8773 | 07-Jan-73 | 0 | 159.01 | | 0.10 | 0 | 0.0 | 0.0% | 0.0% | | | | | |
| 8774 | 08-Jan-73 | 0 | 159.01 | | 0.10 | 0 | 0.0 | 0.0% | 0.0% | | | | | |
| 8775 | 09-Jan-73 | 0 | 159.01 | | 0.10 | 0 | 0.0 | 0.0% | 0.0% | | | | | |
| 8776 | 10-Jan-73 | 0 | 159.01 | | 0.10 | 0 | 0.0 | 0.0% | 0.0% | | | | | |
| 8777 | 11-Jan-73 | 0 | 159.01 | | 0.10 | 0 | 0.0 | 0.0% | 0.0% | | | | | |
| 8778 | 12-Jan-73 | 0 | 159.01 | | 0.10 | 0 | 0.0 | 0.0% | 0.0% | | | | | |
| 8779 | 13-Jan-73 | 0 | 159.01 | | 0.10 | 0 | 0.0 | 0.0% | 0.0% | | | | | |

| | G | H | I | J | K | L | M | N | O | P | Q | R | S | T |
|---|---|---|---|---|---|---|---|---|---|---|---|---|---|---|
| 1 | DATE | Q | h_sump | h_static | h_total | N | Bhp | E_Load | M_Load | M_eff | M_pf | P_In | S_In | W_e |
| 8780 | 14-Jan-73 | 0 | 159.01 | | 0.10 | 0 | 0.0 | 0.0% | 0.0% | | | | | |
| 8781 | 15-Jan-73 | 0 | 159.01 | | 0.10 | 0 | 0.0 | 0.0% | 0.0% | | | | | |
| 8782 | 16-Jan-73 | 0 | 159.01 | | 0.10 | 0 | 0.0 | 0.0% | 0.0% | | | | | |
| 8783 | 17-Jan-73 | 0 | 159.01 | | 0.10 | 0 | 0.0 | 0.0% | 0.0% | | | | | |
| 8784 | 18-Jan-73 | 0 | 159.01 | | 0.10 | 0 | 0.0 | 0.0% | 0.0% | | | | | |
| 8785 | 19-Jan-73 | 0 | 159.01 | | 0.10 | 0 | 0.0 | 0.0% | 0.0% | | | | | |
| 8786 | 20-Jan-73 | 0 | 159.01 | | 0.10 | 0 | 0.0 | 0.0% | 0.0% | | | | | |
| 8787 | 21-Jan-73 | 0 | 159.01 | | 0.10 | 0 | 0.0 | 0.0% | 0.0% | | | | | |
| 8788 | 22-Jan-73 | 0 | 159.01 | | 0.10 | 0 | 0.0 | 0.0% | 0.0% | | | | | |
| 8789 | 23-Jan-73 | 0 | 159.01 | | 0.10 | 0 | 0.0 | 0.0% | 0.0% | | | | | |
| 8790 | 24-Jan-73 | 0 | 159.05 | | 0.10 | 0 | 0.0 | 0.0% | 0.0% | | | | | |
| 8791 | 25-Jan-73 | 3,595 | 171.30 | 3.29 | 3.39 | 7 | 1115.0 | 34.8% | 28.2% | 87.0% | 76.8% | 6,757.4 | 8,796.0 | 162,178 |
| 8792 | 26-Jan-73 | 3,391 | 164.54 | 10.21 | 10.31 | 7 | 1294.3 | 40.4% | 32.7% | 88.0% | 78.6% | 7,754.9 | 9,868.8 | 186,119 |
| 8793 | 27-Jan-73 | 0 | 159.08 | | 0.10 | 0 | 0.0 | 0.0% | 0.0% | | | | | |
| 8794 | 28-Jan-73 | 3,619 | 171.90 | 2.21 | 2.31 | 7 | 1083.6 | 33.8% | 27.4% | 86.8% | 76.5% | 6,580.2 | 8,599.7 | 157,924 |
| 8795 | 29-Jan-73 | 3,567 | 169.80 | 4.31 | 4.41 | 7 | 1144.6 | 35.7% | 28.9% | 87.2% | 77.1% | 6,923.8 | 8,978.6 | 166,170 |
| 8796 | 30-Jan-73 | 0 | 162.32 | | 0.10 | 0 | 0.0 | 0.0% | 0.0% | | | | | |
| 8797 | 31-Jan-73 | 3,609 | 172.11 | 2.64 | 2.74 | 7 | 1096.1 | 34.2% | 27.7% | 86.9% | 76.6% | 6,650.8 | 8,678.2 | 159,620 |
| 8798 | 01-Feb-73 | 3,552 | 170.04 | 4.86 | 4.96 | 7 | 1160.4 | 36.2% | 29.3% | 87.2% | 77.3% | 7,012.2 | 9,075.1 | 168,294 |
| 8799 | 02-Feb-73 | 0 | 159.81 | | 0.10 | 0 | 0.0 | 0.0% | 0.0% | | | | | |
| 8800 | 03-Feb-73 | 3,599 | 171.68 | 3.07 | 3.17 | 7 | 1108.6 | 34.6% | 28.0% | 87.0% | 76.8% | 6,721.4 | 8,756.2 | 161,313 |
| 8801 | 04-Feb-73 | 3,451 | 166.44 | 8.31 | 8.41 | 7 | 1249.8 | 39.0% | 31.6% | 87.7% | 78.1% | 7,509.3 | 9,609.6 | 180,223 |
| 8802 | 05-Feb-73 | 0 | 159.06 | | 0.10 | 0 | 0.0 | 0.0% | 0.0% | | | | | |
| 8803 | 06-Feb-73 | 3,566 | 170.81 | 4.37 | 4.47 | 7 | 1146.4 | 35.8% | 28.9% | 87.2% | 77.1% | 6,933.4 | 8,989.2 | 166,402 |
| 8804 | 07-Feb-73 | 0 | 159.03 | | 0.10 | 0 | 0.0 | 0.0% | 0.0% | | | | | |
| 8805 | 08-Feb-73 | 3,531 | 169.94 | 5.66 | 5.76 | 7 | 1183.4 | 36.9% | 29.9% | 87.4% | 77.5% | 7,140.6 | 9,214.5 | 171,375 |
| 8806 | 09-Feb-73 | 0 | 159.01 | | 0.10 | 0 | 0.0 | 0.0% | 0.0% | | | | | |
| 8807 | 10-Feb-73 | 3,521 | 169.75 | 5.99 | 6.09 | 7 | 1192.9 | 37.2% | 30.1% | 87.4% | 77.6% | 7,193.5 | 9,271.5 | 172,644 |
| 8808 | 11-Feb-73 | 0 | 159.05 | | 0.10 | 0 | 0.0 | 0.0% | 0.0% | | | | | |
| 8809 | 12-Feb-73 | 3,561 | 171.19 | 4.55 | 4.65 | 7 | 1151.5 | 35.9% | 29.1% | 87.2% | 77.2% | 6,962.4 | 9,020.8 | 167,097 |
| 8810 | 13-Feb-73 | 0 | 161.42 | | 0.10 | 0 | 0.0 | 0.0% | 0.0% | | | | | |
| 8811 | 14-Feb-73 | 3,560 | 171.46 | 4.56 | 4.66 | 7 | 1151.8 | 36.0% | 29.1% | 87.2% | 77.2% | 6,964.0 | 9,022.6 | 167,136 |
| 8812 | 15-Feb-73 | 3,298 | 163.22 | 12.80 | 12.90 | 7 | 1364.1 | 42.6% | 34.4% | 88.4% | 79.3% | 8,137.2 | 10,266.0 | 195,292 |
| 8813 | 16-Feb-73 | 0 | 159.05 | | 0.10 | 0 | 0.0 | 0.0% | 0.0% | | | | | |
| 8814 | 17-Feb-73 | 3,559 | 171.25 | 4.63 | 4.73 | 7 | 1153.8 | 36.0% | 29.1% | 87.2% | 77.2% | 6,975.3 | 9,034.8 | 167,406 |
| 8815 | 18-Feb-73 | 0 | 160.99 | | 0.10 | 0 | 0.0 | 0.0% | 0.0% | | | | | |
| 8816 | 19-Feb-73 | 3,558 | 171.09 | 4.65 | 4.75 | 7 | 1154.4 | 36.0% | 29.1% | 87.2% | 77.2% | 6,978.5 | 9,038.3 | 167,483 |
| 8817 | 20-Feb-73 | 0 | 159.05 | | 0.10 | 0 | 0.0 | 0.0% | 0.0% | | | | | |

Little Bayou Meto
Flood Control Pumping Plant
3000-cfs (3 4000-hp)



| | G | H | I | J | K | L | M | N | O | P | Q | R | S | T |
|---|---|---|---|---|---|---|---|---|---|---|---|---|---|---|
| 1 | DATE | Q | h_sump | h_static | h_total | N | Bhp | E_Load | M_Load | M_eff | M_pf | P_In | S_In | W_e |
| 8818 | 21-Feb-73 | 3,599 | 170.23 | 3.08 | 3.18 | 7 | 1108.9 | 34.6% | 28.0% | 87.0% | 76.8% | 6,723.0 | 8,758.0 | 161,352 |
| 8819 | 22-Feb-73 | 0 | 159.01 | | 0.10 | 0 | 0.0 | 0.0% | 0.0% | | | | | |
| 8820 | 23-Feb-73 | 3,599 | 168.52 | 3.10 | 3.20 | 7 | 1109.5 | 34.6% | 28.0% | 87.0% | 76.8% | 6,726.3 | 8,761.6 | 161,431 |
| 8821 | 24-Feb-73 | 0 | 159.01 | | 0.10 | 0 | 0.0 | 0.0% | 0.0% | | | | | |
| 8822 | 25-Feb-73 | 0 | 159.01 | | 0.10 | 0 | 0.0 | 0.0% | 0.0% | | | | | |
| 8823 | 26-Feb-73 | 0 | 159.01 | | 0.10 | 0 | 0.0 | 0.0% | 0.0% | | | | | |
| 8824 | 27-Feb-73 | 0 | 159.01 | | 0.10 | 0 | 0.0 | 0.0% | 0.0% | | | | | |
| 8825 | 28-Feb-73 | 0 | 159.01 | | 0.10 | 0 | 0.0 | 0.0% | 0.0% | | | | | |
| 8826 | 01-Mar-73 | 0 | 159.01 | | 0.10 | 0 | 0.0 | 0.0% | 0.0% | | | | | |
| 8827 | 02-Mar-73 | 0 | 159.01 | | 0.10 | 0 | 0.0 | 0.0% | 0.0% | | | | | |
| 8828 | 03-Mar-73 | 0 | 159.01 | | 0.10 | 0 | 0.0 | 0.0% | 0.0% | | | | | |
| 8829 | 04-Mar-73 | 0 | 159.01 | | 0.10 | 0 | 0.0 | 0.0% | 0.0% | | | | | |
| 8830 | 05-Mar-73 | 0 | 159.01 | | 0.10 | 0 | 0.0 | 0.0% | 0.0% | | | | | |
| 8831 | 06-Mar-73 | 0 | 159.01 | | 0.10 | 0 | 0.0 | 0.0% | 0.0% | | | | | |
| 8832 | 07-Mar-73 | 0 | 159.01 | | 0.10 | 0 | 0.0 | 0.0% | 0.0% | | | | | |
| 8833 | 08-Mar-73 | 0 | 159.01 | | 0.10 | 0 | 0.0 | 0.0% | 0.0% | | | | | |
| 8834 | 09-Mar-73 | 0 | 159.01 | | 0.10 | 0 | 0.0 | 0.0% | 0.0% | | | | | |
| 8835 | 10-Mar-73 | 3,473 | 169.65 | 7.62 | 7.72 | 7 | 1233.3 | 38.5% | 31.1% | 87.7% | 78.0% | 7,418.3 | 9,512.7 | 178,038 |
| 8836 | 11-Mar-73 | 0 | 159.04 | | 0.10 | 0 | 0.0 | 0.0% | 0.0% | | | | | |
| 8837 | 12-Mar-73 | 3,466 | 170.06 | 7.82 | 7.92 | 7 | 1238.1 | 38.6% | 31.3% | 87.7% | 78.0% | 7,444.7 | 9,540.8 | 178,672 |
| 8838 | 13-Mar-73 | 0 | 159.04 | | 0.10 | 0 | 0.0 | 0.0% | 0.0% | | | | | |
| 8839 | 14-Mar-73 | 3,468 | 170.59 | 7.77 | 7.87 | 7 | 1236.9 | 38.6% | 31.2% | 87.7% | 78.0% | 7,438.1 | 9,533.8 | 178,514 |
| 8840 | 15-Mar-73 | 0 | 159.05 | | 0.10 | 0 | 0.0 | 0.0% | 0.0% | | | | | |
| 8841 | 16-Mar-73 | 3,470 | 170.55 | 7.69 | 7.79 | 7 | 1235.0 | 38.5% | 31.2% | 87.7% | 78.0% | 7,427.5 | 9,522.6 | 178,260 |
| 8842 | 17-Mar-73 | 0 | 159.04 | | 0.10 | 0 | 0.0 | 0.0% | 0.0% | | | | | |
| 8843 | 18-Mar-73 | 3,478 | 170.79 | 7.45 | 7.55 | 7 | 1229.3 | 38.4% | 31.0% | 87.6% | 77.9% | 7,395.8 | 9,488.7 | 177,500 |
| 8844 | 19-Mar-73 | 0 | 160.72 | | 0.10 | 0 | 0.0 | 0.0% | 0.0% | | | | | |
| 8845 | 20-Mar-73 | 3,505 | 171.72 | 6.51 | 6.61 | 7 | 1206.9 | 37.7% | 30.5% | 87.5% | 77.7% | 7,271.4 | 9,355.5 | 174,514 |
| 8846 | 21-Mar-73 | 3,391 | 168.05 | 10.19 | 10.29 | 7 | 1293.8 | 40.4% | 32.7% | 88.0% | 78.6% | 7,752.4 | 9,866.1 | 186,057 |
| 8847 | 22-Mar-73 | 0 | 159.03 | | 0.10 | 0 | 0.0 | 0.0% | 0.0% | | | | | |
| 8848 | 23-Mar-73 | 3,498 | 171.35 | 6.77 | 6.87 | 7 | 1213.1 | 37.9% | 30.6% | 87.5% | 77.8% | 7,305.9 | 9,392.5 | 175,341 |
| 8849 | 24-Mar-73 | 0 | 162.50 | | 0.10 | 0 | 0.0 | 0.0% | 0.0% | | | | | |
| 8850 | 25-Mar-73 | 3,496 | 171.30 | 6.82 | 6.92 | 7 | 1214.3 | 37.9% | 30.7% | 87.5% | 77.8% | 7,312.5 | 9,399.6 | 175,500 |
| 8851 | 26-Mar-73 | 0 | 159.04 | | 0.10 | 0 | 0.0 | 0.0% | 0.0% | | | | | |
| 8852 | 27-Mar-73 | 3,476 | 170.49 | 7.52 | 7.62 | 7 | 1230.9 | 38.4% | 31.1% | 87.6% | 78.0% | 7,405.1 | 9,498.6 | 177,721 |
| 8853 | 28-Mar-73 | 0 | 159.01 | | 0.10 | 0 | 0.0 | 0.0% | 0.0% | | | | | |
| 8854 | 29-Mar-73 | 0 | 159.10 | | 0.10 | 0 | 0.0 | 0.0% | 0.0% | | | | | |
| 8855 | 30-Mar-73 | 3,503 | 171.52 | 6.60 | 6.70 | 7 | 1209.0 | 37.7% | 30.5% | 87.5% | 77.7% | 7,283.4 | 9,368.3 | 174,801 |

Little Bayou Meto
Flood Control Pumping Plant
3000-cfs (3 4000-hp)



| | G | H | I | J | K | L | M | N | O | P | Q | R | S | T |
|---|---|---|---|---|---|---|---|---|---|---|---|---|---|---|
| 1 | DATE | Q | h_sump | h_static | h_total | N | Bhp | E_Load | M_Load | M_eff | M_pf | P_In | S_In | W_e |
| 8856 | 31-Mar-73 | 3,307 | 165.43 | 12.57 | 12.67 | 7 | 1357.6 | 42.4% | 34.3% | 88.3% | 79.2% | 8,102.1 | 10,229.8 | 194,450 |
| 8857 | 01-Apr-73 | 0 | 159.06 | | 0.10 | 0 | 0.0 | 0.0% | 0.0% | | | | | |
| 8858 | 02-Apr-73 | 3,497 | 171.20 | 6.80 | 6.90 | 7 | 1213.8 | 37.9% | 30.6% | 87.5% | 77.8% | 7,309.8 | 9,396.7 | 175,436 |
| 8859 | 03-Apr-73 | 0 | 162.74 | | 0.10 | 0 | 0.0 | 0.0% | 0.0% | | | | | |
| 8860 | 04-Apr-73 | 3,515 | 171.71 | 6.17 | 6.27 | 7 | 1198.1 | 37.4% | 30.3% | 87.5% | 77.6% | 7,222.3 | 9,302.6 | 173,335 |
| 8861 | 05-Apr-73 | 3,299 | 164.98 | 12.77 | 12.87 | 7 | 1363.2 | 42.5% | 34.4% | 88.4% | 79.3% | 8,132.6 | 10,261.3 | 195,182 |
| 8862 | 06-Apr-73 | 0 | 159.01 | | 0.10 | 0 | 0.0 | 0.0% | 0.0% | | | | | |
| 8863 | 07-Apr-73 | 3,484 | 170.65 | 7.23 | 7.33 | 7 | 1224.0 | 38.2% | 30.9% | 87.6% | 77.9% | 7,366.7 | 9,457.6 | 176,802 |
| 8864 | 08-Apr-73 | 0 | 159.02 | | 0.10 | 0 | 0.0 | 0.0% | 0.0% | | | | | |
| 8865 | 09-Apr-73 | 3,454 | 169.68 | 8.20 | 8.30 | 7 | 1247.1 | 38.9% | 31.5% | 87.7% | 78.1% | 7,494.8 | 9,594.2 | 179,875 |
| 8866 | 10-Apr-73 | 0 | 159.01 | | 0.10 | 0 | 0.0 | 0.0% | 0.0% | | | | | |
| 8867 | 11-Apr-73 | 3,441 | 169.35 | 8.65 | 8.75 | 7 | 1257.8 | 39.3% | 31.8% | 87.8% | 78.2% | 7,553.8 | 9,656.8 | 181,291 |
| 8868 | 12-Apr-73 | 0 | 159.02 | | 0.10 | 0 | 0.0 | 0.0% | 0.0% | | | | | |
| 8869 | 13-Apr-73 | 3,446 | 169.76 | 8.48 | 8.58 | 7 | 1253.8 | 39.1% | 31.7% | 87.8% | 78.2% | 7,531.7 | 9,633.4 | 180,761 |
| 8870 | 14-Apr-73 | 0 | 159.01 | | 0.10 | 0 | 0.0 | 0.0% | 0.0% | | | | | |
| 8871 | 15-Apr-73 | 0 | 159.01 | | 0.10 | 0 | 0.0 | 0.0% | 0.0% | | | | | |
| 8872 | 16-Apr-73 | 3,381 | 168.64 | 10.49 | 10.59 | 7 | 1300.8 | 40.6% | 32.8% | 88.0% | 78.6% | 7,790.9 | 9,906.6 | 186,983 |
| 8873 | 17-Apr-73 | 0 | 159.01 | | 0.10 | 0 | 0.0 | 0.0% | 0.0% | | | | | |
| 8874 | 18-Apr-73 | 0 | 159.01 | | 0.10 | 0 | 0.0 | 0.0% | 0.0% | | | | | |
| 8875 | 19-Apr-73 | 3,400 | 169.72 | 9.95 | 10.05 | 7 | 1288.2 | 40.2% | 32.5% | 88.0% | 78.5% | 7,721.5 | 9,833.7 | 185,316 |
| 8876 | 20-Apr-73 | 0 | 159.09 | | 0.10 | 0 | 0.0 | 0.0% | 0.0% | | | | | |
| 8877 | 21-Apr-73 | 3,393 | 171.88 | 10.14 | 10.24 | 7 | 1292.6 | 40.3% | 32.6% | 88.0% | 78.6% | 7,745.9 | 9,859.4 | 185,902 |
| 8878 | 22-Apr-73 | 3,391 | 171.96 | 10.20 | 10.30 | 7 | 1294.0 | 40.4% | 32.7% | 88.0% | 78.6% | 7,753.7 | 9,867.5 | 186,088 |
| 8879 | 23-Apr-73 | 3,404 | 172.63 | 9.84 | 9.94 | 7 | 1285.6 | 40.1% | 32.5% | 87.9% | 78.5% | 7,707.3 | 9,818.8 | 184,976 |
| 8880 | 24-Apr-73 | 3,394 | 173.15 | 10.11 | 10.21 | 7 | 1291.9 | 40.3% | 32.6% | 88.0% | 78.6% | 7,742.1 | 9,855.3 | 185,810 |
| 8881 | 25-Apr-73 | 3,386 | 173.67 | 10.33 | 10.43 | 7 | 1297.1 | 40.5% | 32.8% | 88.0% | 78.6% | 7,770.4 | 9,885.0 | 186,489 |
| 8882 | 26-Apr-73 | 3,362 | 174.24 | 11.02 | 11.12 | 7 | 1314.3 | 41.0% | 33.2% | 88.1% | 78.8% | 7,864.8 | 9,983.8 | 188,756 |
| 8883 | 27-Apr-73 | 3,355 | 174.79 | 11.22 | 11.32 | 7 | 1319.9 | 41.2% | 33.3% | 88.1% | 78.8% | 7,895.5 | 10,015.8 | 189,492 |
| 8884 | 28-Apr-73 | 3,372 | 175.28 | 10.73 | 10.83 | 7 | 1306.4 | 40.8% | 33.0% | 88.1% | 78.7% | 7,821.8 | 9,938.8 | 187,723 |
| 8885 | 29-Apr-73 | 3,391 | 175.67 | 10.19 | 10.29 | 7 | 1293.8 | 40.4% | 32.7% | 88.0% | 78.6% | 7,752.4 | 9,866.1 | 186,057 |
| 8886 | 30-Apr-73 | 3,431 | 175.98 | 8.98 | 9.08 | 7 | 1265.5 | 39.5% | 32.0% | 87.8% | 78.3% | 7,596.4 | 9,701.9 | 182,314 |
| 8887 | 01-May-73 | 3,457 | 176.22 | 8.14 | 8.24 | 7 | 1245.7 | 38.9% | 31.5% | 87.7% | 78.1% | 7,486.9 | 9,585.8 | 179,685 |
| 8888 | 02-May-73 | 3,470 | 176.40 | 7.72 | 7.82 | 7 | 1235.7 | 38.6% | 31.2% | 87.7% | 78.0% | 7,431.5 | 9,526.8 | 178,355 |
| 8889 | 03-May-73 | 3,543 | 176.53 | 5.21 | 5.31 | 7 | 1170.5 | 36.5% | 29.6% | 87.3% | 77.4% | 7,068.5 | 9,136.2 | 169,643 |
| 8890 | 04-May-73 | 3,524 | 176.60 | 5.87 | 5.97 | 7 | 1189.4 | 37.1% | 30.0% | 87.4% | 77.6% | 7,174.3 | 9,250.8 | 172,183 |
| 8891 | 05-May-73 | 3,521 | 176.64 | 5.99 | 6.09 | 7 | 1192.9 | 37.2% | 30.1% | 87.4% | 77.6% | 7,193.5 | 9,271.5 | 172,644 |
| 8892 | 06-May-73 | 3,516 | 176.66 | 6.13 | 6.23 | 7 | 1196.9 | 37.4% | 30.2% | 87.4% | 77.6% | 7,215.9 | 9,295.7 | 173,181 |
| 8893 | 07-May-73 | 3,521 | 176.65 | 5.99 | 6.09 | 7 | 1192.9 | 37.2% | 30.1% | 87.4% | 77.6% | 7,193.5 | 9,271.5 | 172,644 |

Little Bayou Meto
Flood Control Pumping Plant
3000-cfs (3 4000-hp)



| | G | H | I | J | K | L | M | N | O | P | Q | R | S | T |
|---|---|---|---|---|---|---|---|---|---|---|---|---|---|---|
| 1 | DATE | Q | h_sump | h_static | h_total | N | Bhp | E_Load | M_Load | M_eff | M_pf | P_In | S_In | W_e |
| 8894 | 08-May-73 | 3,529 | 176.60 | 5.71 | 5.81 | 7 | 1184.8 | 37.0% | 29.9% | 87.4% | 77.5% | 7,148.6 | 9,223.1 | 171,567 |
| 8895 | 09-May-73 | 3,522 | 176.53 | 5.94 | 6.04 | 7 | 1191.4 | 37.2% | 30.1% | 87.4% | 77.6% | 7,185.5 | 9,262.9 | 172,452 |
| 8896 | 10-May-73 | 3,510 | 176.44 | 6.35 | 6.45 | 7 | 1203.1 | 37.6% | 30.4% | 87.5% | 77.7% | 7,250.2 | 9,332.7 | 174,005 |
| 8897 | 11-May-73 | 3,492 | 176.32 | 6.95 | 7.05 | 7 | 1217.4 | 38.0% | 30.7% | 87.6% | 77.8% | 7,329.7 | 9,418.0 | 175,913 |
| 8898 | 12-May-73 | 3,517 | 176.19 | 6.12 | 6.22 | 7 | 1196.6 | 37.3% | 30.2% | 87.4% | 77.6% | 7,214.3 | 9,294.0 | 173,143 |
| 8899 | 13-May-73 | 3,529 | 176.03 | 5.71 | 5.81 | 7 | 1184.8 | 37.0% | 29.9% | 87.4% | 77.5% | 7,148.6 | 9,223.1 | 171,567 |
| 8900 | 14-May-73 | 3,528 | 175.85 | 5.75 | 5.85 | 7 | 1186.0 | 37.0% | 29.9% | 87.4% | 77.5% | 7,155.1 | 9,230.0 | 171,721 |
| 8901 | 15-May-73 | 3,514 | 175.65 | 6.23 | 6.33 | 7 | 1199.8 | 37.4% | 30.3% | 87.5% | 77.7% | 7,231.9 | 9,312.9 | 173,565 |
| 8902 | 16-May-73 | 3,494 | 175.42 | 6.89 | 6.99 | 7 | 1215.9 | 38.0% | 30.7% | 87.6% | 77.8% | 7,321.8 | 9,409.5 | 175,722 |
| 8903 | 17-May-73 | 3,477 | 175.16 | 7.47 | 7.57 | 7 | 1229.7 | 38.4% | 31.1% | 87.6% | 77.9% | 7,398.5 | 9,491.5 | 177,563 |
| 8904 | 18-May-73 | 3,462 | 174.84 | 7.95 | 8.05 | 7 | 1241.2 | 38.7% | 31.3% | 87.7% | 78.1% | 7,461.8 | 9,559.1 | 179,084 |
| 8905 | 19-May-73 | 3,479 | 174.48 | 7.40 | 7.50 | 7 | 1228.1 | 38.3% | 31.0% | 87.6% | 77.9% | 7,389.2 | 9,481.7 | 177,341 |
| 8906 | 20-May-73 | 3,499 | 174.04 | 6.71 | 6.81 | 7 | 1211.6 | 37.8% | 30.6% | 87.5% | 77.8% | 7,297.9 | 9,383.9 | 175,150 |
| 8907 | 21-May-73 | 3,489 | 173.51 | 7.06 | 7.16 | 7 | 1220.0 | 38.1% | 30.8% | 87.6% | 77.9% | 7,344.3 | 9,433.6 | 176,262 |
| 8908 | 22-May-73 | 3,482 | 172.91 | 7.30 | 7.40 | 7 | 1225.7 | 38.3% | 30.9% | 87.6% | 77.9% | 7,376.0 | 9,467.5 | 177,024 |
| 8909 | 23-May-73 | 3,446 | 171.38 | 8.47 | 8.57 | 7 | 1253.6 | 39.1% | 31.7% | 87.8% | 78.2% | 7,530.4 | 9,632.0 | 180,729 |
| 8910 | 24-May-73 | 0 | 159.01 | | 0.10 | 0 | 0.0 | 0.0% | 0.0% | | | | | |
| 8911 | 25-May-73 | 0 | 159.01 | | 0.10 | 0 | 0.0 | 0.0% | 0.0% | | | | | |
| 8912 | 26-May-73 | 0 | 159.01 | | 0.10 | 0 | 0.0 | 0.0% | 0.0% | | | | | |
| 8913 | 27-May-73 | 0 | 159.03 | | 0.10 | 0 | 0.0 | 0.0% | 0.0% | | | | | |
| 8914 | 28-May-73 | 3,470 | 170.18 | 7.70 | 7.80 | 7 | 1235.2 | 38.6% | 31.2% | 87.7% | 78.0% | 7,428.8 | 9,524.0 | 178,292 |
| 8915 | 29-May-73 | 0 | 159.05 | | 0.10 | 0 | 0.0 | 0.0% | 0.0% | | | | | |
| 8916 | 30-May-73 | 3,530 | 171.27 | 5.68 | 5.78 | 7 | 1184.0 | 37.0% | 29.9% | 87.4% | 77.5% | 7,143.8 | 9,217.9 | 171,452 |
| 8917 | 31-May-73 | 3,334 | 164.35 | 11.81 | 11.91 | 7 | 1336.4 | 41.7% | 33.7% | 88.2% | 79.0% | 7,985.9 | 10,109.7 | 191,662 |
| 8918 | 01-Jun-73 | 0 | 159.08 | | 0.10 | 0 | 0.0 | 0.0% | 0.0% | | | | | |
| 8919 | 02-Jun-73 | 3,662 | 171.50 | 0.63 | 0.73 | 7 | 1036.8 | 32.4% | 26.2% | 86.6% | 76.1% | 6,314.7 | 8,302.6 | 151,554 |
| 8920 | 03-Jun-73 | 3,359 | 163.31 | 11.12 | 11.22 | 7 | 1317.1 | 41.1% | 33.3% | 88.1% | 78.8% | 7,880.2 | 9,999.8 | 189,124 |
| 8921 | 04-Jun-73 | 0 | 159.04 | | 0.10 | 0 | 0.0 | 0.0% | 0.0% | | | | | |
| 8922 | 05-Jun-73 | 3,558 | 170.66 | 4.66 | 4.76 | 7 | 1154.7 | 36.0% | 29.2% | 87.2% | 77.2% | 6,980.1 | 9,040.1 | 167,522 |
| 8923 | 06-Jun-73 | 0 | 159.05 | | 0.10 | 0 | 0.0 | 0.0% | 0.0% | | | | | |
| 8924 | 07-Jun-73 | 3,478 | 169.82 | 7.44 | 7.54 | 7 | 1229.0 | 38.4% | 31.0% | 87.6% | 77.9% | 7,394.5 | 9,487.3 | 177,468 |
| 8925 | 08-Jun-73 | 0 | 159.01 | | 0.10 | 0 | 0.0 | 0.0% | 0.0% | | | | | |
| 8926 | 09-Jun-73 | 3,283 | 168.67 | 13.21 | 13.31 | 7 | 1374.7 | 42.9% | 34.7% | 88.4% | 79.4% | 8,195.3 | 10,325.7 | 196,688 |
| 8927 | 10-Jun-73 | 0 | 159.01 | | 0.10 | 0 | 0.0 | 0.0% | 0.0% | | | | | |
| 8928 | 11-Jun-73 | 0 | 159.01 | | 0.10 | 0 | 0.0 | 0.0% | 0.0% | | | | | |
| 8929 | 12-Jun-73 | 0 | 159.01 | | 0.10 | 0 | 0.0 | 0.0% | 0.0% | | | | | |
| 8930 | 13-Jun-73 | 0 | 159.01 | | 0.10 | 0 | 0.0 | 0.0% | 0.0% | | | | | |
| 8931 | 14-Jun-73 | 0 | 159.01 | | 0.10 | 0 | 0.0 | 0.0% | 0.0% | | | | | |

Little Bayou Meto
Flood Control Pumping Plant
3000-cfs (3 4000-hp)



| | G | H | I | J | K | L | M | N | O | P | Q | R | S | T |
|---|---|---|---|---|---|---|---|---|---|---|---|---|---|---|
| 1 | DATE | Q | h_sump | h_static | h_total | N | Bhp | E_Load | M_Load | M_eff | M_pf | P_In | S_In | W_e |
| 8932 | 15-Jun-73 | 0 | 159.01 | | 0.10 | 0 | 0.0 | 0.0% | 0.0% | | | | | |
| 8933 | 16-Jun-73 | 0 | 159.01 | | 0.10 | 0 | 0.0 | 0.0% | 0.0% | | | | | |
| 8934 | 17-Jun-73 | 0 | 159.01 | | 0.10 | 0 | 0.0 | 0.0% | 0.0% | | | | | |
| 8935 | 18-Jun-73 | 0 | 159.01 | | 0.10 | 0 | 0.0 | 0.0% | 0.0% | | | | | |
| 8936 | 19-Jun-73 | 0 | 159.01 | | 0.10 | 0 | 0.0 | 0.0% | 0.0% | | | | | |
| 8937 | 20-Jun-73 | 0 | 159.01 | | 0.10 | 0 | 0.0 | 0.0% | 0.0% | | | | | |
| 8938 | 21-Jun-73 | 0 | 159.01 | | 0.10 | 0 | 0.0 | 0.0% | 0.0% | | | | | |
| 8939 | 22-Jun-73 | 0 | 159.01 | | 0.10 | 0 | 0.0 | 0.0% | 0.0% | | | | | |
| 8940 | 23-Jun-73 | 0 | 159.01 | | 0.10 | 0 | 0.0 | 0.0% | 0.0% | | | | | |
| 8941 | 24-Jun-73 | 0 | 159.01 | | 0.10 | 0 | 0.0 | 0.0% | 0.0% | | | | | |
| 8942 | 25-Jun-73 | 0 | 159.01 | | 0.10 | 0 | 0.0 | 0.0% | 0.0% | | | | | |
| 8943 | 26-Jun-73 | 0 | 159.01 | | 0.10 | 0 | 0.0 | 0.0% | 0.0% | | | | | |
| 8944 | 27-Jun-73 | 0 | 159.01 | | 0.10 | 0 | 0.0 | 0.0% | 0.0% | | | | | |
| 8945 | 28-Jun-73 | 0 | 159.01 | | 0.10 | 0 | 0.0 | 0.0% | 0.0% | | | | | |
| 8946 | 29-Jun-73 | 0 | 159.01 | | 0.10 | 0 | 0.0 | 0.0% | 0.0% | | | | | |
| 8947 | 30-Jun-73 | 0 | 159.01 | | 0.10 | 0 | 0.0 | 0.0% | 0.0% | | | | | |
| 8948 | 01-Jul-73 | 0 | 159.01 | | 0.10 | 0 | 0.0 | 0.0% | 0.0% | | | | | |
| 8949 | 02-Jul-73 | 0 | 159.01 | | 0.10 | 0 | 0.0 | 0.0% | 0.0% | | | | | |
| 8950 | 03-Jul-73 | 0 | 159.01 | | 0.10 | 0 | 0.0 | 0.0% | 0.0% | | | | | |
| 8951 | 04-Jul-73 | 0 | 159.01 | | 0.10 | 0 | 0.0 | 0.0% | 0.0% | | | | | |
| 8952 | 05-Jul-73 | 0 | 159.01 | | 0.10 | 0 | 0.0 | 0.0% | 0.0% | | | | | |
| 8953 | 06-Jul-73 | 0 | 159.01 | | 0.10 | 0 | 0.0 | 0.0% | 0.0% | | | | | |
| 8954 | 07-Jul-73 | 0 | 159.01 | | 0.10 | 0 | 0.0 | 0.0% | 0.0% | | | | | |
| 8955 | 08-Jul-73 | 0 | 159.01 | | 0.10 | 0 | 0.0 | 0.0% | 0.0% | | | | | |
| 8956 | 09-Jul-73 | 0 | 159.01 | | 0.10 | 0 | 0.0 | 0.0% | 0.0% | | | | | |
| 8957 | 10-Jul-73 | 0 | 159.01 | | 0.10 | 0 | 0.0 | 0.0% | 0.0% | | | | | |
| 8958 | 11-Jul-73 | 0 | 159.01 | | 0.10 | 0 | 0.0 | 0.0% | 0.0% | | | | | |
| 8959 | 12-Jul-73 | 0 | 159.01 | | 0.10 | 0 | 0.0 | 0.0% | 0.0% | | | | | |
| 8960 | 13-Jul-73 | 0 | 159.01 | | 0.10 | 0 | 0.0 | 0.0% | 0.0% | | | | | |
| 8961 | 14-Jul-73 | 0 | 159.01 | | 0.10 | 0 | 0.0 | 0.0% | 0.0% | | | | | |
| 8962 | 15-Jul-73 | 0 | 159.01 | | 0.10 | 0 | 0.0 | 0.0% | 0.0% | | | | | |
| 8963 | 16-Jul-73 | 0 | 159.01 | | 0.10 | 0 | 0.0 | 0.0% | 0.0% | | | | | |
| 8964 | 17-Jul-73 | 0 | 159.01 | | 0.10 | 0 | 0.0 | 0.0% | 0.0% | | | | | |
| 8965 | 18-Jul-73 | 0 | 159.01 | | 0.10 | 0 | 0.0 | 0.0% | 0.0% | | | | | |
| 8966 | 19-Jul-73 | 0 | 159.01 | | 0.10 | 0 | 0.0 | 0.0% | 0.0% | | | | | |
| 8967 | 20-Jul-73 | 0 | 159.01 | | 0.10 | 0 | 0.0 | 0.0% | 0.0% | | | | | |
| 8968 | 21-Jul-73 | 0 | 159.01 | | 0.10 | 0 | 0.0 | 0.0% | 0.0% | | | | | |
| 8969 | 22-Jul-73 | 0 | 159.01 | | 0.10 | 0 | 0.0 | 0.0% | 0.0% | | | | | |

Little Bayou Meto
Flood Control Pumping Plant
3000-cfs (3 4000-hp)



| | G | H | I | J | K | L | M | N | O | P | Q | R | S | T |
|---|---|---|---|---|---|---|---|---|---|---|---|---|---|---|
| 1 | DATE | Q | h_sump | h_static | h_total | N | Bhp | E_Load | M_Load | M_eff | M_pf | P_In | S_In | W_e |
| 8970 | 23-Jul-73 | 0 | 159.01 | | 0.10 | 0 | 0.0 | 0.0% | 0.0% | | | | | |
| 8971 | 24-Jul-73 | 0 | 159.01 | | 0.10 | 0 | 0.0 | 0.0% | 0.0% | | | | | |
| 8972 | 25-Jul-73 | 0 | 159.01 | | 0.10 | 0 | 0.0 | 0.0% | 0.0% | | | | | |
| 8973 | 26-Jul-73 | 0 | 159.01 | | 0.10 | 0 | 0.0 | 0.0% | 0.0% | | | | | |
| 8974 | 27-Jul-73 | 0 | 159.01 | | 0.10 | 0 | 0.0 | 0.0% | 0.0% | | | | | |
| 8975 | 28-Jul-73 | 0 | 159.01 | | 0.10 | 0 | 0.0 | 0.0% | 0.0% | | | | | |
| 8976 | 29-Jul-73 | 0 | 159.01 | | 0.10 | 0 | 0.0 | 0.0% | 0.0% | | | | | |
| 8977 | 30-Jul-73 | 0 | 159.01 | | 0.10 | 0 | 0.0 | 0.0% | 0.0% | | | | | |
| 8978 | 31-Jul-73 | 0 | 159.01 | | 0.10 | 0 | 0.0 | 0.0% | 0.0% | | | | | |
| 8979 | 01-Aug-73 | 0 | 159.01 | | 0.10 | 0 | 0.0 | 0.0% | 0.0% | | | | | |
| 8980 | 02-Aug-73 | 0 | 159.01 | | 0.10 | 0 | 0.0 | 0.0% | 0.0% | | | | | |
| 8981 | 03-Aug-73 | 0 | 159.01 | | 0.10 | 0 | 0.0 | 0.0% | 0.0% | | | | | |
| 8982 | 04-Aug-73 | 0 | 159.01 | | 0.10 | 0 | 0.0 | 0.0% | 0.0% | | | | | |
| 8983 | 05-Aug-73 | 0 | 159.01 | | 0.10 | 0 | 0.0 | 0.0% | 0.0% | | | | | |
| 8984 | 06-Aug-73 | 0 | 159.01 | | 0.10 | 0 | 0.0 | 0.0% | 0.0% | | | | | |
| 8985 | 07-Aug-73 | 0 | 159.01 | | 0.10 | 0 | 0.0 | 0.0% | 0.0% | | | | | |
| 8986 | 08-Aug-73 | 0 | 159.01 | | 0.10 | 0 | 0.0 | 0.0% | 0.0% | | | | | |
| 8987 | 09-Aug-73 | 0 | 159.01 | | 0.10 | 0 | 0.0 | 0.0% | 0.0% | | | | | |
| 8988 | 10-Aug-73 | 0 | 159.01 | | 0.10 | 0 | 0.0 | 0.0% | 0.0% | | | | | |
| 8989 | 11-Aug-73 | 0 | 159.01 | | 0.10 | 0 | 0.0 | 0.0% | 0.0% | | | | | |
| 8990 | 12-Aug-73 | 0 | 159.01 | | 0.10 | 0 | 0.0 | 0.0% | 0.0% | | | | | |
| 8991 | 13-Aug-73 | 0 | 159.01 | | 0.10 | 0 | 0.0 | 0.0% | 0.0% | | | | | |
| 8992 | 14-Aug-73 | 0 | 159.01 | | 0.10 | 0 | 0.0 | 0.0% | 0.0% | | | | | |
| 8993 | 15-Aug-73 | 0 | 159.01 | | 0.10 | 0 | 0.0 | 0.0% | 0.0% | | | | | |
| 8994 | 16-Aug-73 | 0 | 159.01 | | 0.10 | 0 | 0.0 | 0.0% | 0.0% | | | | | |
| 8995 | 17-Aug-73 | 0 | 159.01 | | 0.10 | 0 | 0.0 | 0.0% | 0.0% | | | | | |
| 8996 | 18-Aug-73 | 0 | 159.01 | | 0.10 | 0 | 0.0 | 0.0% | 0.0% | | | | | |
| 8997 | 19-Aug-73 | 0 | 159.01 | | 0.10 | 0 | 0.0 | 0.0% | 0.0% | | | | | |
| 8998 | 20-Aug-73 | 0 | 159.01 | | 0.10 | 0 | 0.0 | 0.0% | 0.0% | | | | | |
| 8999 | 21-Aug-73 | 0 | 159.01 | | 0.10 | 0 | 0.0 | 0.0% | 0.0% | | | | | |
| 9000 | 22-Aug-73 | 0 | 159.01 | | 0.10 | 0 | 0.0 | 0.0% | 0.0% | | | | | |
| 9001 | 23-Aug-73 | 0 | 159.01 | | 0.10 | 0 | 0.0 | 0.0% | 0.0% | | | | | |
| 9002 | 24-Aug-73 | 0 | 159.01 | | 0.10 | 0 | 0.0 | 0.0% | 0.0% | | | | | |
| 9003 | 25-Aug-73 | 0 | 159.01 | | 0.10 | 0 | 0.0 | 0.0% | 0.0% | | | | | |
| 9004 | 26-Aug-73 | 0 | 159.01 | | 0.10 | 0 | 0.0 | 0.0% | 0.0% | | | | | |
| 9005 | 27-Aug-73 | 0 | 159.01 | | 0.10 | 0 | 0.0 | 0.0% | 0.0% | | | | | |
| 9006 | 28-Aug-73 | 0 | 159.01 | | 0.10 | 0 | 0.0 | 0.0% | 0.0% | | | | | |
| 9007 | 29-Aug-73 | 0 | 159.01 | | 0.10 | 0 | 0.0 | 0.0% | 0.0% | | | | | |

Little Bayou Meto
Flood Control Pumping Plant
3000-cfs (3 4000-hp)



| | G | H | I | J | K | L | M | N | O | P | Q | R | S | T |
|---|---|---|---|---|---|---|---|---|---|---|---|---|---|---|
| 1 | DATE | Q | h_sump | h_static | h_total | N | Bhp | E_Load | M_Load | M_eff | M_pf | P_In | S_In | W_e |
| 9008 | 30-Aug-73 | 0 | 159.55 | | 0.10 | 0 | 0.0 | 0.0% | 0.0% | | | | | |
| 9009 | 31-Aug-73 | 0 | 160.54 | | 0.10 | 0 | 0.0 | 0.0% | 0.0% | | | | | |
| 9010 | 01-Sep-73 | 0 | 161.20 | | 0.10 | 0 | 0.0 | 0.0% | 0.0% | | | | | |
| 9011 | 02-Sep-73 | 0 | 161.66 | | 0.10 | 0 | 0.0 | 0.0% | 0.0% | | | | | |
| 9012 | 03-Sep-73 | 0 | 162.00 | | 0.10 | 0 | 0.0 | 0.0% | 0.0% | | | | | |
| 9013 | 04-Sep-73 | 0 | 162.24 | | 0.10 | 0 | 0.0 | 0.0% | 0.0% | | | | | |
| 9014 | 05-Sep-73 | 0 | 162.77 | | 0.10 | 0 | 0.0 | 0.0% | 0.0% | | | | | |
| 9015 | 06-Sep-73 | 0 | 164.04 | | 0.10 | 0 | 0.0 | 0.0% | 0.0% | | | | | |
| 9016 | 07-Sep-73 | 0 | 165.03 | | 0.10 | 0 | 0.0 | 0.0% | 0.0% | | | | | |
| 9017 | 08-Sep-73 | 0 | 165.42 | | 0.10 | 0 | 0.0 | 0.0% | 0.0% | | | | | |
| 9018 | 09-Sep-73 | 0 | 165.84 | | 0.10 | 0 | 0.0 | 0.0% | 0.0% | | | | | |
| 9019 | 10-Sep-73 | 0 | 166.04 | | 0.10 | 0 | 0.0 | 0.0% | 0.0% | | | | | |
| 9020 | 11-Sep-73 | 0 | 166.07 | | 0.10 | 0 | 0.0 | 0.0% | 0.0% | | | | | |
| 9021 | 12-Sep-73 | 0 | 166.25 | | 0.10 | 0 | 0.0 | 0.0% | 0.0% | | | | | |
| 9022 | 13-Sep-73 | 0 | 166.26 | | 0.10 | 0 | 0.0 | 0.0% | 0.0% | | | | | |
| 9023 | 14-Sep-73 | 0 | 166.24 | | 0.10 | 0 | 0.0 | 0.0% | 0.0% | | | | | |
| 9024 | 15-Sep-73 | 0 | 166.21 | | 0.10 | 0 | 0.0 | 0.0% | 0.0% | | | | | |
| 9025 | 16-Sep-73 | 0 | 166.51 | | 0.10 | 0 | 0.0 | 0.0% | 0.0% | | | | | |
| 9026 | 17-Sep-73 | 0 | 166.50 | | 0.10 | 0 | 0.0 | 0.0% | 0.0% | | | | | |
| 9027 | 18-Sep-73 | 0 | 166.50 | | 0.10 | 0 | 0.0 | 0.0% | 0.0% | | | | | |
| 9028 | 19-Sep-73 | 0 | 166.37 | | 0.10 | 0 | 0.0 | 0.0% | 0.0% | | | | | |
| 9029 | 20-Sep-73 | 0 | 166.10 | | 0.10 | 0 | 0.0 | 0.0% | 0.0% | | | | | |
| 9030 | 21-Sep-73 | 0 | 165.80 | | 0.10 | 0 | 0.0 | 0.0% | 0.0% | | | | | |
| 9031 | 22-Sep-73 | 0 | 165.45 | | 0.10 | 0 | 0.0 | 0.0% | 0.0% | | | | | |
| 9032 | 23-Sep-73 | 0 | 165.10 | | 0.10 | 0 | 0.0 | 0.0% | 0.0% | | | | | |
| 9033 | 24-Sep-73 | 0 | 164.89 | | 0.10 | 0 | 0.0 | 0.0% | 0.0% | | | | | |
| 9034 | 25-Sep-73 | 0 | 164.81 | | 0.10 | 0 | 0.0 | 0.0% | 0.0% | | | | | |
| 9035 | 26-Sep-73 | 0 | 164.77 | | 0.10 | 0 | 0.0 | 0.0% | 0.0% | | | | | |
| 9036 | 27-Sep-73 | 0 | 165.06 | | 0.10 | 0 | 0.0 | 0.0% | 0.0% | | | | | |
| 9037 | 28-Sep-73 | 0 | 165.12 | | 0.10 | 0 | 0.0 | 0.0% | 0.0% | | | | | |
| 9038 | 29-Sep-73 | 0 | 165.10 | | 0.10 | 0 | 0.0 | 0.0% | 0.0% | | | | | |
| 9039 | 30-Sep-73 | 0 | 165.10 | | 0.10 | 0 | 0.0 | 0.0% | 0.0% | | | | | |
| 9040 | 01-Oct-73 | 0 | 165.10 | | 0.10 | 0 | 0.0 | 0.0% | 0.0% | | | | | |
| 9041 | 02-Oct-73 | 0 | 165.10 | | 0.10 | 0 | 0.0 | 0.0% | 0.0% | | | | | |
| 9042 | 03-Oct-73 | 0 | 165.44 | | 0.10 | 0 | 0.0 | 0.0% | 0.0% | | | | | |
| 9043 | 04-Oct-73 | 0 | 165.49 | | 0.10 | 0 | 0.0 | 0.0% | 0.0% | | | | | |
| 9044 | 05-Oct-73 | 0 | 165.69 | | 0.10 | 0 | 0.0 | 0.0% | 0.0% | | | | | |
| 9045 | 06-Oct-73 | 0 | 165.82 | | 0.10 | 0 | 0.0 | 0.0% | 0.0% | | | | | |

Little Bayou Meto
Flood Control Pumping Plant
3000-cfs (3 4000-hp)



| | G | H | I | J | K | L | M | N | O | P | Q | R | S | T |
|---|---|---|---|---|---|---|---|---|---|---|---|---|---|---|
| 1 | DATE | Q | h_sump | h_static | h_total | N | Bhp | E_Load | M_Load | M_eff | M_pf | P_In | S_In | W_e |
| 9046 | 07-Oct-73 | 0 | 165.81 | | 0.10 | 0 | 0.0 | 0.0% | 0.0% | | | | | |
| 9047 | 08-Oct-73 | 0 | 165.80 | | 0.10 | 0 | 0.0 | 0.0% | 0.0% | | | | | |
| 9048 | 09-Oct-73 | 0 | 166.11 | | 0.10 | 0 | 0.0 | 0.0% | 0.0% | | | | | |
| 9049 | 10-Oct-73 | 0 | 166.15 | | 0.10 | 0 | 0.0 | 0.0% | 0.0% | | | | | |
| 9050 | 11-Oct-73 | 2,444 | 167.53 | 0.51 | 0.61 | 5 | 1033.2 | 32.2% | 26.1% | 86.5% | 76.0% | 4,496.0 | 5,914.1 | 107,905 |
| 9051 | 12-Oct-73 | 0 | 159.01 | | 0.10 | 0 | 0.0 | 0.0% | 0.0% | | | | | |
| 9052 | 13-Oct-73 | 0 | 159.01 | | 0.10 | 0 | 0.0 | 0.0% | 0.0% | | | | | |
| 9053 | 14-Oct-73 | 0 | 159.01 | | 0.10 | 0 | 0.0 | 0.0% | 0.0% | | | | | |
| 9054 | 15-Oct-73 | 0 | 159.01 | | 0.10 | 0 | 0.0 | 0.0% | 0.0% | | | | | |
| 9055 | 16-Oct-73 | 0 | 159.01 | | 0.10 | 0 | 0.0 | 0.0% | 0.0% | | | | | |
| 9056 | 17-Oct-73 | 0 | 159.01 | | 0.10 | 0 | 0.0 | 0.0% | 0.0% | | | | | |
| 9057 | 18-Oct-73 | 0 | 159.02 | | 0.10 | 0 | 0.0 | 0.0% | 0.0% | | | | | |
| 9058 | 19-Oct-73 | 3,426 | 168.00 | 9.11 | 9.21 | 7 | 1268.6 | 39.6% | 32.0% | 87.8% | 78.3% | 7,613.2 | 9,719.6 | 182,717 |
| 9059 | 20-Oct-73 | 0 | 159.01 | | 0.10 | 0 | 0.0 | 0.0% | 0.0% | | | | | |
| 9060 | 21-Oct-73 | 0 | 159.01 | | 0.10 | 0 | 0.0 | 0.0% | 0.0% | | | | | |
| 9061 | 22-Oct-73 | 0 | 159.01 | | 0.10 | 0 | 0.0 | 0.0% | 0.0% | | | | | |
| 9062 | 23-Oct-73 | 0 | 159.01 | | 0.10 | 0 | 0.0 | 0.0% | 0.0% | | | | | |
| 9063 | 24-Oct-73 | 0 | 159.01 | | 0.10 | 0 | 0.0 | 0.0% | 0.0% | | | | | |
| 9064 | 25-Oct-73 | 0 | 159.01 | | 0.10 | 0 | 0.0 | 0.0% | 0.0% | | | | | |
| 9065 | 26-Oct-73 | 0 | 159.01 | | 0.10 | 0 | 0.0 | 0.0% | 0.0% | | | | | |
| 9066 | 27-Oct-73 | 0 | 159.01 | | 0.10 | 0 | 0.0 | 0.0% | 0.0% | | | | | |
| 9067 | 28-Oct-73 | 0 | 159.01 | | 0.10 | 0 | 0.0 | 0.0% | 0.0% | | | | | |
| 9068 | 29-Oct-73 | 0 | 159.01 | | 0.10 | 0 | 0.0 | 0.0% | 0.0% | | | | | |
| 9069 | 30-Oct-73 | 0 | 159.01 | | 0.10 | 0 | 0.0 | 0.0% | 0.0% | | | | | |
| 9070 | 31-Oct-73 | 0 | 159.01 | | 0.10 | 0 | 0.0 | 0.0% | 0.0% | | | | | |
| 9071 | 01-Nov-73 | 0 | 159.01 | | 0.10 | 0 | 0.0 | 0.0% | 0.0% | | | | | |
| 9072 | 02-Nov-73 | 0 | 159.01 | | 0.10 | 0 | 0.0 | 0.0% | 0.0% | | | | | |
| 9073 | 03-Nov-73 | 0 | 159.01 | | 0.10 | 0 | 0.0 | 0.0% | 0.0% | | | | | |
| 9074 | 04-Nov-73 | 0 | 159.01 | | 0.10 | 0 | 0.0 | 0.0% | 0.0% | | | | | |
| 9075 | 05-Nov-73 | 0 | 159.01 | | 0.10 | 0 | 0.0 | 0.0% | 0.0% | | | | | |
| 9076 | 06-Nov-73 | 0 | 159.01 | | 0.10 | 0 | 0.0 | 0.0% | 0.0% | | | | | |
| 9077 | 07-Nov-73 | 0 | 159.01 | | 0.10 | 0 | 0.0 | 0.0% | 0.0% | | | | | |
| 9078 | 08-Nov-73 | 0 | 159.01 | | 0.10 | 0 | 0.0 | 0.0% | 0.0% | | | | | |
| 9079 | 09-Nov-73 | 0 | 159.01 | | 0.10 | 0 | 0.0 | 0.0% | 0.0% | | | | | |
| 9080 | 10-Nov-73 | 0 | 159.01 | | 0.10 | 0 | 0.0 | 0.0% | 0.0% | | | | | |
| 9081 | 11-Nov-73 | 0 | 159.01 | | 0.10 | 0 | 0.0 | 0.0% | 0.0% | | | | | |
| 9082 | 12-Nov-73 | 3,684 | 168.25 | 0.00 | 0.10 | 7 | 1018.0 | 31.8% | 25.7% | 86.5% | 75.9% | 6,208.1 | 8,182.1 | 148,993 |
| 9083 | 13-Nov-73 | 0 | 159.01 | | 0.10 | 0 | 0.0 | 0.0% | 0.0% | | | | | |

Little Bayou Meto
Flood Control Pumping Plant
3000-cfs (3 4000-hp)



| | G | H | I | J | K | L | M | N | O | P | Q | R | S | T |
|---|---|---|---|---|---|---|---|---|---|---|---|---|---|---|
| 1 | DATE | Q | h_sump | h_static | h_total | N | Bhp | E_Load | M_Load | M_eff | M_pf | P_In | S_In | W_e |
| 17900 | | | | | | | | | | | | | | |
| 17901 | | | | | | | | | | | | | | |
| 17902 | | | | | | | | | | | | | | |
| 17903 | | Q | Period-of-Record Pumping Station Operating Statistics | | | | | | | | | | | |
| 17904 | DATE | (kcfs) | h_sump | h_static | h_total | N | Bhp | E_Load | M_Load | M_eff | M_pf | P_In | S_In | W_e |
| 17905 | 365.2 | (cfs) | (ft) | (ft) | (ft) | | (hp) | | | | | (kW) | (kVA) | (MWh) |
| 17906 | SUM/COUNT | 7,488.2 | N/A | N/A | N/A | N/A | N/A | N/A | N/A | N/A | N/A | N/A | N/A | 336,795 |
| 17907 | MIN | 0.0 | 159.0 | 0.0 | 0.1 | 0.0 | 0.0 | 0.0% | 0.0% | 86.5% | 75.9% | 1,773.7 | 2,337.7 | 42.57 |
| 17908 | AVG | 418.4 | 163.2 | 3.0 | 0.5 | 0.8 | 158.0 | 4.9% | 4.0% | 86.9% | 76.7% | 5,471.0 | 7,111.2 | 131.30 |
| 17909 | MAX | 3,684.0 | 176.7 | 23.0 | 23.1 | 7.0 | 1,511.7 | 47.2% | 38.2% | 89.2% | 80.7% | 8,935.1 | 11,070.6 | 214.44 |
| 17910 | | | | | | | | | | | | | | |
| 17911 | 17896 | = No. of days pumped over POR | | | | | | | | | | | | |
| 17912 | 429504 | = No. of hours pumped over POR | | | | | | | | | | | | |
| 17913 | 49.00 | = Duration of POR in years | | | | | | | | | | | | |
| 17914 | 4.2% | = Days pumped per year as a percentage | | | | | | | | | | | | |

**Cell:** K1
**Comment:** The pumping system HQ curve was used, not the pump bowl curve. Total dynamic head is the static head plus the 0.1-foot minimum head loss input to HEC-IFH CSA.

**Cell:** P1
**Comment:** The values in this column must be linearly interpolated.

**Cell:** Q1
**Comment:** The values in this column must be linearly interpolated.

**Cell:** H17904
**Comment:** Total flow (in SUM/COUNT line) over the POR of pump station in 1000's of cfs

**Cell:** G17905
**Comment:** Average number of hours pumped annually over the POR

**Cell:** H17905
**Comment:** Min, avg, and max flows of pump station over the POR in cfs

**Cell:** J17905
**Comment:** Hydraulic static head is the negative of mechanical static head

**Cell:** L17905
**Comment:** Number of pumps operating

**Cell:** M17905
**Comment:** Pump brake hp

**Cell:** N17905
**Comment:** Diesel engine load as a percentage

**Cell:** O17905
**Comment:** Electric motor load as a percentage

**Cell:** P17905
**Comment:** Electric motor efficiency as a function of M_load

**Cell:** Q17905
**Comment:** Electric motor power factor as a function of M_load

**Cell:** R17905
**Comment:** Power demand in kW of pumping station

**Cell:** S17905
**Comment:** Power demand in kVA of
pumping plant (accounts for power factor)

# APPENDIX C – ENGINEERING INVESTIGATIONS & ANALYSES FLOOD CONTROL COMPONENT

# SECTION IV – STRUCTURAL, MECHANICAL, ELECTRICAL & CIVIL DESIGN

# APPENDIX IV-C-F

**Braswell, Hank T MVK**
**From:** Braswell, Hank T MVK
**Sent:** Wednesday, July 10, 2002 9:22 AM
**To:** Purvis, Nancy M MVK
**Subject:** RE: Little Bayou Meto Pump Station

Nancy,

Here are the weights and dimensions you need. They are based on G.E. switchgear, so a good, general figure to use would be 300 psf.

1000-cfs Pumping Station:
1 EA - 38"W x 30"D, 2000# (252 psf)
2 EA - 90"W x 30"D, 5000# (267 psf)

3000-cfs Pumping Station:
1 EA - 36"W x 94"D, 4000# (170 psf)
3 EA - 112"W x 30"D, 5200# (223 psf)

There is plenty of room in the pump house for the switchgear, so no external switchgear building will be required. If you need to, please see the CADD drawings for the location of the switchgear:

**Hank, 1-5742**
**ED-DC, Rm 209**

-----Original Message-----
**From:** **Purvis, Nancy M MVK**
**Sent:** Thursday, June 27, 2002 1:49 PM
**To:** Braswell, Hank T MVK
**Subject:** Little Bayou Meto Pump Station

In order to perform sliding stability analyses for the 1000 and 3000 cfs pump stations I need the weight of all components of the structure. I've gotten an estimate of the concrete from John Burnsworth and the pumps, motors and gears from Robert Hite. Could you give me an estimate of the weight of the electrical components and any building required to house them. A ball park figure would be sufficent at this time.

Thanks,
Nancy

# APPENDIX C – ENGINEERING INVESTIGATIONS & ANALYSES FLOOD CONTROL COMPONENT

# SECTION IV – STRUCTURAL, MECHANICAL, ELECTRICAL & CIVIL DESIGN

# APPENDIX IV-C-G

Little Bayou Meto
Flood Control Pumping Plant
3000-cfs (3 4000-hp)



| | A | B | C | D |
|---|---|---|---|---|
| 1 | Value | Range Name | Range | Description |
| 2 | 24 | TIME | =$A$2 | Duration of calculation period (hr) |
| 3 | | MO | =$E$2 | Month of the calculation period |
| 4 | | YR | =$F$2 | Year of the calculation period |
| 5 | | DATE | =$G$2 | Date of the calculation period |
| 6 | 0.1 | H_LOSS | =$A$6 | Estimated constant (stray) head loss (ft.) input to IFH |
| 7 | 2 | N_MAX | =$A$7 | Number of pumps for this configuration |
| 8 | 8.823 | K_1 | =$A$8 | Constant in denominator of Bhp equation |
| 9 | 147 | Pump_Speed | =$A$9 | Rated pump speed (rpm); 2% slip assumed |
| 10 | 48 | Poles | =$A$10 | Number of poles in motor |
| 11 | 3300 | P_O_ENGINE | =$A$11 | Rated engine output (hp) |
| 12 | 4000 | P_O_MOTOR | =$A$12 | Rated motor output (hp) |
| 13 | 4000 | Bhp_Min | =$A$13 | Minimum Bhp |
| 14 | 900 | Syn_Speed | =$A$14 | Rated motor synchronous speed (rpm) |
| 15 | 1000 | Engine_Speed | =$A$15 | Rated engine speed (rpm) |
| 16 | 6.122 | Gear_ratio | =$A$29 | Gear ratio |
| 17 | | Q | =$I$2 | Flow (cfs) |
| 18 | | h_sump | =$J$2 | Sump water level elevation (ft) |
| 19 | | h_static | =$K$2 | Hydrualic static head (ft) (negative of the mechanical) |
| 20 | | h_river | =$L$2 | River water level elevation (ft) |
| 21 | | h_total | =$M$2 | Total head (ft) |
| 22 | | N | =$N$2 | No. of pumps ON during calculation period |
| 23 | | Pump_eff | =$P$2 | Pump efficiency (%) |
| 24 | | Bhp | =$Q$2 | Brake horsepower/pump (hp) |
| 25 | | E_Load | =$R$2 | Engine load relative to its rated hp (%) |
| 26 | | M_Load | =$S$2 | Motor load relative to its rated hp (%) |
| 27 | | M_eff | =$T$2 | Motor efficiency at M_Load (%) |
| 28 | | M_pf | =$U$2 | Motor power factor at M_Load (%) |
| 29 | | P_In | =$V$2 | Pump station input real power (kW) |
| 30 | | S_In | =$W$2 | Pump station input apparent power (kVA) |
| 31 | | W_e | =$X$2 | Pump station electric energy usage (kWh) |
| 32 | | Fuel_use | =$Y$2 | Pump station diesel fuel usage (gal) |
| 33 | | PUMP_DATA | =$X$24:$AA$41 | Pump eff as a f(Q) |
| 34 | | PUMP_DATA_1 | =$AD$24:$AG$43 | Pump eff as a f(H) |
| 35 | | SYS_LOSS | =$AJ$24:$AM$38 | Pump eff as a f(Q) accounting for system loss |
| 36 | | LOAD_DATA | =$Z$52:$AE$57 | Electric motor eff & pf as a f(M_LOAD) |
| 37 | | PUMP_1_STOP | =$Y$3 | Pump 1 OFF at this elev. |
| 38 | | PUMP_1_START | =$Z$3 | Pump 1 ON at this elev. |
| 39 | | PUMP_2_STOP | =$AA$3 | Pump 2 OFF at this elev. |
| 40 | | PUMP_2_START | =$AB$3 | Pump 2 ON at this elev. |
| 41 | | PUMP_3_STOP | =$AC$3 | Pump 3 OFF at this elev. |
| 42 | | PUMP_3_START | =$AD$3 | Pump 3 ON at this elev. |
| 43 | | PUMP_4_STOP | =$AE$3 | Pump 4 OFF at this elev. |
| 44 | | PUMP_4_START | =$AF$3 | Pump 4 ON at this elev. |
| 45 | | PUMP_5_STOP | =$AG$3 | Pump 5 OFF at this elev. |
| 46 | | PUMP_5_START | =$AH$3 | Pump 5 ON at this elev. |
| 47 | 0.0449 | Fuel_Rate | =$A$44 | Fuel usage rate in gal/hp-hr |
| 48 | 3.0% | Gear_Loss_Ehp | =$A$45 | Gear hp loss as a percent of Engine BHP |
| 49 | 1.0% | Gear_Loss_Mhp | =$A$46 | Gear hp loss as a percent of Motor BHP |
| 50 | | LEGEND | =$A$2:$D$47 | This table of input data |

Little Bayou Meto
Flood Control Pumping Plant
1000-cfs (2 1750-hp)



| | A | B | C | D |
|---|---|---|---|---|
| 1 | Value | Range Name | Range | Description |
| 2 | 24 | TIME | =$A$2 | Duration of calculation period (hr) |
| 3 | | MO | =$E$2 | Month of the calculation period |
| 4 | | YR | =$F$2 | Year of the calculation period |
| 5 | | DATE | =$G$2 | Date of the calculation period |
| 6 | 0.1 | H_LOSS | =$A$6 | Estimated constant (stray) head loss (ft.) input to IFH |
| 7 | 2 | N_MAX | =$A$7 | Number of pumps for this configuration |
| 8 | 8.823 | K_1 | =$A$8 | Constant in denominator of Bhp equation |
| 9 | 221 | Pump_Speed | =$A$9 | Rated pump speed (rpm); 2% slip assumed |
| 10 | 32 | Poles | =$A$10 | Number of poles in motor |
| 11 | 1750 | P_O_ENGINE | =$A$11 | Rated engine output (hp) |
| 12 | 1750 | P_O_MOTOR | =$A$12 | Rated motor output (hp) |
| 13 | 1750 | Bhp_Min | =$A$13 | Minimum Bhp |
| 14 | 1200 | Syn_Speed | =$A$14 | Rated motor synchronous speed (rpm) |
| 15 | 1200 | Engine_Speed | =$A$15 | Rated engine speed (rpm) |
| 16 | 5.442 | Gear_ratio | =$A$29 | Gear ratio |
| 17 | | Q | =$I$2 | Flow (cfs) |
| 18 | | h_sump | =$J$2 | Sump water level elevation (ft) |
| 19 | | h_static | =$K$2 | Hydrualic static head (ft) (negative of the mechanical) |
| 20 | | h_river | =$L$2 | River water level elevation (ft) |
| 21 | | h_total | =$M$2 | Total head (ft) |
| 22 | | N | =$N$2 | No. of pumps ON during calculation period |
| 23 | | Pump_eff | =$P$2 | Pump efficiency (%) |
| 24 | | Bhp | =$Q$2 | Brake horsepower/pump (hp) |
| 25 | | E_Load | =$R$2 | Engine load relative to its rated hp (%) |
| 26 | | M_Load | =$S$2 | Motor load relative to its rated hp (%) |
| 27 | | M_eff | =$T$2 | Motor efficiency at M_Load (%) |
| 28 | | M_pf | =$U$2 | Motor power factor at M_Load (%) |
| 29 | | P_In | =$V$2 | Pump station input real power (kW) |
| 30 | | S_In | =$W$2 | Pump station input apparent power (kVA) |
| 31 | | W_e | =$X$2 | Pump station electric energy usage (kWh) |
| 32 | | Fuel_use | =$Y$2 | Pump station diesel fuel usage (gal) |
| 33 | | PUMP_DATA | =$X$24:$AA$41 | Pump eff as a f(Q) |
| 34 | | PUMP_DATA_1 | =$AD$24:$AG$43 | Pump eff as a f(H) |
| 35 | | SYS_LOSS | =$AJ$24:$AM$38 | Pump eff as a f(Q) accounting for system loss |
| 36 | | LOAD_DATA | =$Z$52:$AE$57 | Electric motor eff & pf as a f(M_LOAD) |
| 37 | | PUMP_1_STOP | =$Y$3 | Pump 1 OFF at this elev. |
| 38 | | PUMP_1_START | =$Z$3 | Pump 1 ON at this elev. |
| 39 | | PUMP_2_STOP | =$AA$3 | Pump 2 OFF at this elev. |
| 40 | | PUMP_2_START | =$AB$3 | Pump 2 ON at this elev. |
| 41 | | PUMP_3_STOP | =$AC$3 | Pump 3 OFF at this elev. |
| 42 | | PUMP_3_START | =$AD$3 | Pump 3 ON at this elev. |
| 43 | | PUMP_4_STOP | =$AE$3 | Pump 4 OFF at this elev. |
| 44 | | PUMP_4_START | =$AF$3 | Pump 4 ON at this elev. |
| 45 | | PUMP_5_STOP | =$AG$3 | Pump 5 OFF at this elev. |
| 46 | | PUMP_5_START | =$AH$3 | Pump 5 ON at this elev. |
| 47 | 120.0 | Fuel_Rate | =$A$44 | Fuel usage rate in gal/hr |
| 48 | 3.0% | Gear_Loss_Ehp | =$A$45 | Gear hp loss as a percent of Engine BHP |
| 49 | 1.0% | Gear_Loss_Mhp | =$A$46 | Gear hp loss as a percent of Motor BHP |
| 50 | | LEGEND | =$A$2:$D$47 | This table of input data |

# APPENDIX C – ENGINEERING INVESTIGATIONS & ANALYSES FLOOD CONTROL COMPONENT

## SECTION IV – STRUCTURAL, MECHANICAL, ELECTRICAL & CIVIL DESIGN

# APPENDIX IV-C-H

Little Bayou Meto
Flood Control Pumping Plant
1000-cfs (2 1750-hp)



| | A | B | C | D | E | F | G | H | I | J | K | L | M | N | O | P | Q |
|---|---|---|---|---|---|---|---|---|---|---|---|---|---|---|---|---|---|
| 1 | | | | | | | | | | Minimum | | | | | | | |
| 2 | | | | | | | | | | Monthly | Billing | | | | | | |
| 3 | | | | Metered | | | Billing | Ratchet | Customer | Demand | Demand | Incremental Energy | | Energy | | | Monthly |
| 4 | Period-of-Record | | | Energy | Demands | | Demand | Demand | Charge | Charge | Charge | Block 1 | Block 2 | Charge | Subtotal Bill | Total Bill | Load |
| 5 | YEAR | MO | DAYS | kWh | kWD | kVAD | kWD | kWD | $16.24 | $1.97 | $2.95 | $0.05607 | $0.04493 | kWh | | | Factor |
| 6 | 1949 | 1 | 31 | 240,320 | 2,018.0 | 2,271.2 | 2,044.1 | 2,044 | $16.24 | $4,026.68 | $6,029.80 | $306,618.00 | $0.00 | $13,474.77 | $19,520.81 | $19,520.81 | 16.0% |
| 7 | 1949 | 2 | 28 | 1,168,793 | 2,166.0 | 2,414.9 | 2,173.4 | 2,173 | $16.24 | $4,280.81 | $6,410.35 | $326,007.00 | $842,786.00 | $56,145.59 | $62,572.18 | $62,572.18 | 80.3% |
| 8 | 1949 | 3 | 31 | 415,355 | 1,871.8 | 2,133.6 | 1,920.2 | 2,173 | $16.24 | $4,280.81 | $5,664.00 | $288,031.00 | $127,324.00 | $21,870.57 | $27,550.81 | $27,550.81 | 29.8% |
| 9 | 1949 | 4 | 30 | 320,674 | 1,670.2 | 1,937.2 | 1,743.5 | 2,173 | $16.24 | $4,280.81 | $5,141.85 | $261,522.00 | $59,152.00 | $17,321.24 | $22,479.33 | $22,479.33 | 26.7% |
| 10 | 1949 | 5 | 31 | 450,219 | 2,242.2 | 2,491.6 | 2,242.5 | 2,242 | $16.24 | $4,416.74 | $6,613.90 | $336,372.00 | $113,847.00 | $23,975.52 | $30,605.66 | $30,605.66 | 27.0% |
| 11 | 1949 | 6 | 30 | 698,928 | 2,015.9 | 2,269.3 | 2,042.4 | 2,242 | $16.24 | $4,416.74 | $6,023.90 | $306,354.00 | $392,574.00 | $34,815.62 | $40,855.76 | $40,855.76 | 48.2% |
| 12 | 1949 | 7 | 31 | 0 | 0.0 | 0.0 | 0.0 | 2,242 | $16.24 | $4,416.74 | $0.00 | $0.00 | $0.00 | $0.00 | $16.24 | $4,416.74 | 0.0% |
| 13 | 1949 | 8 | 31 | 0 | 0.0 | 0.0 | 0.0 | 2,242 | $16.24 | $4,416.74 | $0.00 | $0.00 | $0.00 | $0.00 | $16.24 | $4,416.74 | 0.0% |
| 14 | 1949 | 9 | 30 | 0 | 0.0 | 0.0 | 0.0 | 2,242 | $16.24 | $4,416.74 | $0.00 | $0.00 | $0.00 | $0.00 | $16.24 | $4,416.74 | 0.0% |
| 15 | 1949 | 10 | 31 | 0 | 0.0 | 0.0 | 0.0 | 2,242 | $16.24 | $4,416.74 | $0.00 | $0.00 | $0.00 | $0.00 | $16.24 | $4,416.74 | 0.0% |
| 16 | 1949 | 11 | 30 | 0 | 0.0 | 0.0 | 0.0 | 2,242 | $16.24 | $4,416.74 | $0.00 | $0.00 | $0.00 | $0.00 | $16.24 | $4,416.74 | 0.0% |
| 17 | 1949 | 12 | 31 | 0 | 0.0 | 0.0 | 0.0 | 2,242 | $16.24 | $4,416.74 | $0.00 | $0.00 | $0.00 | $0.00 | $16.24 | $4,416.74 | 0.0% |
| 18 | 1950 | 1 | 31 | 524,167 | 1,738.6 | 2,004.7 | 1,804.2 | 2,242 | $16.24 | $4,416.74 | $5,321.80 | $270,635.00 | $253,532.00 | $26,565.70 | $31,903.74 | $31,903.74 | 40.5% |
| 19 | 1950 | 2 | 28 | 983,126 | 1,863.7 | 2,125.8 | 1,913.2 | 2,242 | $16.24 | $4,416.74 | $5,643.35 | $286,981.00 | $696,145.00 | $47,368.82 | $53,028.41 | $53,028.41 | 78.5% |
| 20 | 1950 | 3 | 31 | 260,547 | 835.1 | 968.6 | 871.7 | 2,242 | $16.24 | $4,416.74 | $2,572.40 | $130,761.00 | $129,786.00 | $13,163.05 | $15,751.69 | $15,751.69 | 41.9% |
| 21 | 1950 | 4 | 30 | 280,590 | 835.1 | 968.6 | 871.7 | 2,242 | $16.24 | $4,416.74 | $2,572.40 | $130,761.00 | $149,829.00 | $14,063.59 | $16,652.23 | $16,652.23 | 46.7% |
| 22 | 1950 | 5 | 31 | 543,738 | 2,184.8 | 2,433.9 | 2,190.5 | 2,190 | $16.24 | $4,314.30 | $6,460.50 | $328,572.00 | $215,166.00 | $28,090.44 | $34,567.18 | $34,567.18 | 33.5% |
| 23 | 1950 | 6 | 30 | 0 | 0.0 | 0.0 | 0.0 | 2,190 | $16.24 | $4,314.30 | $0.00 | $0.00 | $0.00 | $0.00 | $16.24 | $4,314.30 | 0.0% |
| 24 | 1950 | 7 | 31 | 97,135 | 2,053.4 | 2,304.0 | 2,073.6 | 2,190 | $16.24 | $4,314.30 | $6,118.30 | $311,042.00 | $0.00 | $5,446.34 | $11,580.88 | $11,580.88 | 6.4% |
| 25 | 1950 | 8 | 31 | 603,784 | 2,221.8 | 2,471.1 | 2,224.0 | 2,224 | $16.24 | $4,381.28 | $6,560.80 | $333,602.00 | $270,182.00 | $30,844.34 | $37,421.38 | $37,421.38 | 36.5% |
| 26 | 1950 | 9 | 30 | 300,258 | 1,934.1 | 2,192.7 | 1,973.4 | 2,224 | $16.24 | $4,381.28 | $5,820.35 | $296,012.00 | $4,246.00 | $16,788.17 | $22,624.76 | $22,624.76 | 21.6% |
| 27 | 1950 | 10 | 31 | 0 | 0.0 | 0.0 | 0.0 | 2,224 | $16.24 | $4,381.28 | $0.00 | $0.00 | $0.00 | $0.00 | $16.24 | $4,381.28 | 0.0% |
| 28 | 1950 | 11 | 30 | 0 | 0.0 | 0.0 | 0.0 | 2,224 | $16.24 | $4,381.28 | $0.00 | $0.00 | $0.00 | $0.00 | $16.24 | $4,381.28 | 0.0% |
| 29 | 1950 | 12 | 31 | 0 | 0.0 | 0.0 | 0.0 | 2,224 | $16.24 | $4,381.28 | $0.00 | $0.00 | $0.00 | $0.00 | $16.24 | $4,381.28 | 0.0% |
| 30 | 1951 | 1 | 31 | 541,137 | 1,670.2 | 1,937.2 | 1,743.5 | 2,224 | $16.24 | $4,381.28 | $5,141.85 | $261,522.00 | $279,615.00 | $27,226.64 | $32,384.73 | $32,384.73 | 43.5% |
| 31 | 1951 | 2 | 28 | 259,309 | 1,881.2 | 2,142.5 | 1,928.3 | 2,224 | $16.24 | $4,381.28 | $5,687.60 | $289,242.00 | $0.00 | $14,539.46 | $20,243.30 | $20,243.30 | 20.5% |
| 32 | 1951 | 3 | 31 | 80,168 | 1,670.2 | 1,937.2 | 1,743.5 | 2,224 | $16.24 | $4,381.28 | $5,141.85 | $261,522.00 | $0.00 | $4,495.04 | $9,653.13 | $9,653.13 | 6.5% |
| 33 | 1951 | 4 | 30 | 0 | 0.0 | 0.0 | 0.0 | 2,224 | $16.24 | $4,381.28 | $0.00 | $0.00 | $0.00 | $0.00 | $16.24 | $4,381.28 | 0.0% |
| 34 | 1951 | 5 | 31 | 85,586 | 1,805.1 | 2,069.4 | 1,862.5 | 2,224 | $16.24 | $4,381.28 | $5,492.90 | $279,374.00 | $0.00 | $4,798.82 | $10,307.96 | $10,307.96 | 6.4% |
| 35 | 1951 | 6 | 30 | 286,922 | 1,775.0 | 2,040.2 | 1,836.2 | 2,224 | $16.24 | $4,381.28 | $5,416.20 | $275,426.00 | $11,496.00 | $15,959.65 | $21,392.09 | $21,392.09 | 22.5% |
| 36 | 1951 | 7 | 31 | 1,095,877 | 2,277.9 | 2,527.5 | 2,274.8 | 2,275 | $16.24 | $4,481.75 | $6,711.25 | $341,217.00 | $754,660.00 | $53,038.91 | $59,766.40 | $59,766.40 | 64.7% |
| 37 | 1951 | 8 | 31 | 45,519 | 1,896.6 | 2,157.2 | 1,941.5 | 2,275 | $16.24 | $4,481.75 | $5,725.95 | $291,218.00 | $0.00 | $2,552.23 | $8,294.42 | $8,294.42 | 3.2% |
| 38 | 1951 | 9 | 30 | 40,528 | 1,688.7 | 1,955.5 | 1,760.0 | 2,275 | $16.24 | $4,481.75 | $5,192.00 | $263,997.00 | $0.00 | $2,272.43 | $7,480.67 | $7,480.67 | 3.3% |
| 39 | 1951 | 10 | 31 | 0 | 0.0 | 0.0 | 0.0 | 2,275 | $16.24 | $4,481.75 | $0.00 | $0.00 | $0.00 | $0.00 | $16.24 | $4,481.75 | 0.0% |
| 40 | 1951 | 11 | 30 | 0 | 0.0 | 0.0 | 0.0 | 2,275 | $16.24 | $4,481.75 | $0.00 | $0.00 | $0.00 | $0.00 | $16.24 | $4,481.75 | 0.0% |
| 41 | 1951 | 12 | 31 | 0 | 0.0 | 0.0 | 0.0 | 2,275 | $16.24 | $4,481.75 | $0.00 | $0.00 | $0.00 | $0.00 | $16.24 | $4,481.75 | 0.0% |
| 42 | 1952 | 1 | 31 | 0 | 0.0 | 0.0 | 0.0 | 2,275 | $16.24 | $4,481.75 | $0.00 | $0.00 | $0.00 | $0.00 | $16.24 | $4,481.75 | 0.0% |
| 43 | 1952 | 2 | 29 | 0 | 0.0 | 0.0 | 0.0 | 2,275 | $16.24 | $4,481.75 | $0.00 | $0.00 | $0.00 | $0.00 | $16.24 | $4,481.75 | 0.0% |
| 44 | 1952 | 3 | 31 | 566,467 | 1,782.9 | 2,047.8 | 1,843.1 | 2,275 | $16.24 | $4,481.75 | $5,436.85 | $276,459.00 | $290,008.00 | $28,531.12 | $33,984.21 | $33,984.21 | 42.7% |
| 45 | 1952 | 4 | 30 | 608,339 | 2,022.2 | 2,275.1 | 2,047.6 | 2,275 | $16.24 | $4,481.75 | $6,041.60 | $307,143.00 | $301,196.00 | $30,754.24 | $36,812.08 | $36,812.08 | 41.8% |
| 46 | 1952 | 5 | 31 | 85,845 | 925.0 | 1,056.3 | 950.7 | 2,275 | $16.24 | $4,481.75 | $2,805.45 | $142,602.00 | $0.00 | $4,813.31 | $7,635.00 | $7,635.00 | 12.5% |
| 47 | 1952 | 6 | 30 | 0 | 0.0 | 0.0 | 0.0 | 2,275 | $16.24 | $4,481.75 | $0.00 | $0.00 | $0.00 | $0.00 | $16.24 | $4,481.75 | 0.0% |
| 48 | 1952 | 7 | 31 | 0 | 0.0 | 0.0 | 0.0 | 2,048 | $16.24 | $4,034.56 | $0.00 | $0.00 | $0.00 | $0.00 | $16.24 | $4,034.56 | 0.0% |
| 49 | 1952 | 8 | 31 | 0 | 0.0 | 0.0 | 0.0 | 2,048 | $16.24 | $4,034.56 | $0.00 | $0.00 | $0.00 | $0.00 | $16.24 | $4,034.56 | 0.0% |
| 50 | 1952 | 9 | 30 | 0 | 0.0 | 0.0 | 0.0 | 2,048 | $16.24 | $4,034.56 | $0.00 | $0.00 | $0.00 | $0.00 | $16.24 | $4,034.56 | 0.0% |
| 51 | 1952 | 10 | 31 | 0 | 0.0 | 0.0 | 0.0 | 2,048 | $16.24 | $4,034.56 | $0.00 | $0.00 | $0.00 | $0.00 | $16.24 | $4,034.56 | 0.0% |
| 52 | 1952 | 11 | 30 | 0 | 0.0 | 0.0 | 0.0 | 2,048 | $16.24 | $4,034.56 | $0.00 | $0.00 | $0.00 | $0.00 | $16.24 | $4,034.56 | 0.0% |
| 53 | 1952 | 12 | 31 | 0 | 0.0 | 0.0 | 0.0 | 2,048 | $16.24 | $4,034.56 | $0.00 | $0.00 | $0.00 | $0.00 | $16.24 | $4,034.56 | 0.0% |
| 54 | 1953 | 1 | 31 | 0 | 0.0 | 0.0 | 0.0 | 2,048 | $16.24 | $4,034.56 | $0.00 | $0.00 | $0.00 | $0.00 | $16.24 | $4,034.56 | 0.0% |
| 55 | 1953 | 2 | 28 | 0 | 0.0 | 0.0 | 0.0 | 2,048 | $16.24 | $4,034.56 | $0.00 | $0.00 | $0.00 | $0.00 | $16.24 | $4,034.56 | 0.0% |
| 56 | 1953 | 3 | 31 | 486,431 | 1,821.7 | 2,085.4 | 1,876.9 | 2,048 | $16.24 | $4,034.56 | $5,537.15 | $281,534.00 | $204,897.00 | $24,991.63 | $30,545.02 | $30,545.02 | 35.9% |
| 57 | 1953 | 4 | 30 | 323,014 | 1,762.7 | 2,028.3 | 1,825.4 | 1,877 | $16.24 | $3,697.69 | $5,383.75 | $273,814.00 | $49,200.00 | $17,563.31 | $22,963.30 | $22,963.30 | 25.5% |
| 58 | 1953 | 5 | 31 | 1,243,889 | 1,705.4 | 1,972.0 | 1,774.8 | 1,877 | $16.24 | $3,697.69 | $5,236.25 | $266,220.00 | $977,669.00 | $58,853.62 | $64,106.11 | $64,106.11 | 98.0% |
| 59 | 1953 | 6 | 30 | 80,168 | 1,670.2 | 1,937.2 | 1,743.5 | 1,877 | $16.24 | $3,697.69 | $5,141.85 | $261,522.00 | $0.00 | $4,495.04 | $9,653.13 | $9,653.13 | 6.7% |
| 60 | 1953 | 7 | 31 | 0 | 0.0 | 0.0 | 0.0 | 1,877 | $16.24 | $3,697.69 | $0.00 | $0.00 | $0.00 | $0.00 | $16.24 | $3,697.69 | 0.0% |
| 61 | 1953 | 8 | 31 | 0 | 0.0 | 0.0 | 0.0 | 1,877 | $16.24 | $3,697.69 | $0.00 | $0.00 | $0.00 | $0.00 | $16.24 | $3,697.69 | 0.0% |

Little Bayou Meto
Flood Control Pumping Plant
1000-cfs (2 1750-hp)



| | A | B | C | D | E | F | G | H | I | J | K | L | M | N | O | P | Q |
|---|---|---|---|---|---|---|---|---|---|---|---|---|---|---|---|---|---|
| 1 | | | | | | | | | | Minimum | | | | | | | |
| 2 | | | | | | | | | | Monthly | Billing | | | | | | |
| 3 | | | | Metered | | | Billing | Ratchet | Customer | Demand | Demand | Incremental Energy | | Energy | | | Monthly |
| 4 | Period-of-Record | | | Energy | Demands | | Demand | Demand | Charge | Charge | Charge | Block 1 | Block 2 | Charge | Subtotal Bill | Total Bill | Load |
| 5 | YEAR | MO | DAYS | kWh | kWD | kVAD | kWD | kWD | $16.24 | $1.97 | $2.95 | $0.05607 | $0.04493 | kWh | | | Factor |
| 62 | 1953 | 9 | 30 | 0 | 0.0 | 0.0 | 0.0 | 1,877 | $16.24 | $3,697.69 | $0.00 | $0.00 | $0.00 | $0.00 | $16.24 | $3,697.69 | 0.0% |
| 63 | 1953 | 10 | 31 | 0 | 0.0 | 0.0 | 0.0 | 1,877 | $16.24 | $3,697.69 | $0.00 | $0.00 | $0.00 | $0.00 | $16.24 | $3,697.69 | 0.0% |
| 64 | 1953 | 11 | 30 | 0 | 0.0 | 0.0 | 0.0 | 1,877 | $16.24 | $3,697.69 | $0.00 | $0.00 | $0.00 | $0.00 | $16.24 | $3,697.69 | 0.0% |
| 65 | 1953 | 12 | 31 | 0 | 0.0 | 0.0 | 0.0 | 1,877 | $16.24 | $3,697.69 | $0.00 | $0.00 | $0.00 | $0.00 | $16.24 | $3,697.69 | 0.0% |
| 66 | 1954 | 1 | 31 | 521,095 | 1,670.2 | 1,937.2 | 1,743.5 | 1,877 | $16.24 | $3,697.69 | $5,141.85 | $261,522.00 | $259,573.00 | $26,326.15 | $31,484.24 | $31,484.24 | 41.9% |
| 67 | 1954 | 2 | 28 | 120,253 | 1,670.2 | 1,937.2 | 1,743.5 | 1,877 | $16.24 | $3,697.69 | $5,141.85 | $261,522.00 | $0.00 | $6,742.57 | $11,900.66 | $11,900.66 | 10.7% |
| 68 | 1954 | 3 | 31 | 0 | 0.0 | 0.0 | 0.0 | 1,825 | $16.24 | $3,595.25 | $0.00 | $0.00 | $0.00 | $0.00 | $16.24 | $3,595.25 | 0.0% |
| 69 | 1954 | 4 | 30 | 0 | 0.0 | 0.0 | 0.0 | 1,775 | $16.24 | $3,496.75 | $0.00 | $0.00 | $0.00 | $0.00 | $16.24 | $3,496.75 | 0.0% |
| 70 | 1954 | 5 | 31 | 293,634 | 1,877.8 | 2,139.3 | 1,925.3 | 1,925 | $16.24 | $3,792.25 | $5,678.75 | $288,802.00 | $4,832.00 | $16,410.23 | $22,105.22 | $22,105.22 | 21.0% |
| 71 | 1954 | 6 | 30 | 0 | 0.0 | 0.0 | 0.0 | 1,925 | $16.24 | $3,792.25 | $0.00 | $0.00 | $0.00 | $0.00 | $16.24 | $3,792.25 | 0.0% |
| 72 | 1954 | 7 | 31 | 0 | 0.0 | 0.0 | 0.0 | 1,925 | $16.24 | $3,792.25 | $0.00 | $0.00 | $0.00 | $0.00 | $16.24 | $3,792.25 | 0.0% |
| 73 | 1954 | 8 | 31 | 0 | 0.0 | 0.0 | 0.0 | 1,925 | $16.24 | $3,792.25 | $0.00 | $0.00 | $0.00 | $0.00 | $16.24 | $3,792.25 | 0.0% |
| 74 | 1954 | 9 | 30 | 0 | 0.0 | 0.0 | 0.0 | 1,925 | $16.24 | $3,792.25 | $0.00 | $0.00 | $0.00 | $0.00 | $16.24 | $3,792.25 | 0.0% |
| 75 | 1954 | 10 | 31 | 0 | 0.0 | 0.0 | 0.0 | 1,925 | $16.24 | $3,792.25 | $0.00 | $0.00 | $0.00 | $0.00 | $16.24 | $3,792.25 | 0.0% |
| 76 | 1954 | 11 | 30 | 0 | 0.0 | 0.0 | 0.0 | 1,925 | $16.24 | $3,792.25 | $0.00 | $0.00 | $0.00 | $0.00 | $16.24 | $3,792.25 | 0.0% |
| 77 | 1954 | 12 | 31 | 0 | 0.0 | 0.0 | 0.0 | 1,925 | $16.24 | $3,792.25 | $0.00 | $0.00 | $0.00 | $0.00 | $16.24 | $3,792.25 | 0.0% |
| 78 | 1955 | 1 | 31 | 0 | 0.0 | 0.0 | 0.0 | 1,925 | $16.24 | $3,792.25 | $0.00 | $0.00 | $0.00 | $0.00 | $16.24 | $3,792.25 | 0.0% |
| 79 | 1955 | 2 | 28 | 0 | 0.0 | 0.0 | 0.0 | 1,925 | $16.24 | $3,792.25 | $0.00 | $0.00 | $0.00 | $0.00 | $16.24 | $3,792.25 | 0.0% |
| 80 | 1955 | 3 | 31 | 360,758 | 1,670.2 | 1,937.2 | 1,743.5 | 1,925 | $16.24 | $3,792.25 | $5,141.85 | $261,522.00 | $99,236.00 | $19,122.21 | $24,280.30 | $24,280.30 | 29.0% |
| 81 | 1955 | 4 | 30 | 200,421 | 1,670.2 | 1,937.2 | 1,743.5 | 1,925 | $16.24 | $3,792.25 | $5,141.85 | $261,522.00 | $0.00 | $11,237.61 | $16,395.70 | $16,395.70 | 16.7% |
| 82 | 1955 | 5 | 31 | 0 | 0.0 | 0.0 | 0.0 | 1,743 | $16.24 | $3,433.71 | $0.00 | $0.00 | $0.00 | $0.00 | $16.24 | $3,433.71 | 0.0% |
| 83 | 1955 | 6 | 30 | 0 | 0.0 | 0.0 | 0.0 | 1,743 | $16.24 | $3,433.71 | $0.00 | $0.00 | $0.00 | $0.00 | $16.24 | $3,433.71 | 0.0% |
| 84 | 1955 | 7 | 31 | 0 | 0.0 | 0.0 | 0.0 | 1,743 | $16.24 | $3,433.71 | $0.00 | $0.00 | $0.00 | $0.00 | $16.24 | $3,433.71 | 0.0% |
| 85 | 1955 | 8 | 31 | 0 | 0.0 | 0.0 | 0.0 | 1,743 | $16.24 | $3,433.71 | $0.00 | $0.00 | $0.00 | $0.00 | $16.24 | $3,433.71 | 0.0% |
| 86 | 1955 | 9 | 30 | 0 | 0.0 | 0.0 | 0.0 | 1,743 | $16.24 | $3,433.71 | $0.00 | $0.00 | $0.00 | $0.00 | $16.24 | $3,433.71 | 0.0% |
| 87 | 1955 | 10 | 31 | 0 | 0.0 | 0.0 | 0.0 | 1,743 | $16.24 | $3,433.71 | $0.00 | $0.00 | $0.00 | $0.00 | $16.24 | $3,433.71 | 0.0% |
| 88 | 1955 | 11 | 30 | 0 | 0.0 | 0.0 | 0.0 | 1,743 | $16.24 | $3,433.71 | $0.00 | $0.00 | $0.00 | $0.00 | $16.24 | $3,433.71 | 0.0% |
| 89 | 1955 | 12 | 31 | 0 | 0.0 | 0.0 | 0.0 | 1,743 | $16.24 | $3,433.71 | $0.00 | $0.00 | $0.00 | $0.00 | $16.24 | $3,433.71 | 0.0% |
| 90 | 1956 | 1 | 31 | 0 | 0.0 | 0.0 | 0.0 | 1,743 | $16.24 | $3,433.71 | $0.00 | $0.00 | $0.00 | $0.00 | $16.24 | $3,433.71 | 0.0% |
| 91 | 1956 | 2 | 29 | 440,926 | 835.1 | 968.6 | 871.7 | 1,743 | $16.24 | $3,433.71 | $2,572.40 | $130,761.00 | $310,165.00 | $21,267.48 | $23,856.12 | $23,856.12 | 75.9% |
| 92 | 1956 | 3 | 31 | 140,295 | 835.1 | 968.6 | 871.7 | 1,743 | $16.24 | $3,433.71 | $2,572.40 | $130,761.00 | $9,534.00 | $7,760.13 | $10,348.77 | $10,348.77 | 22.6% |
| 93 | 1956 | 4 | 30 | 0 | 0.0 | 0.0 | 0.0 | 872 | $16.24 | $1,717.84 | $0.00 | $0.00 | $0.00 | $0.00 | $16.24 | $1,717.84 | 0.0% |
| 94 | 1956 | 5 | 31 | 0 | 0.0 | 0.0 | 0.0 | 872 | $16.24 | $1,717.84 | $0.00 | $0.00 | $0.00 | $0.00 | $16.24 | $1,717.84 | 0.0% |
| 95 | 1956 | 6 | 30 | 0 | 0.0 | 0.0 | 0.0 | 872 | $16.24 | $1,717.84 | $0.00 | $0.00 | $0.00 | $0.00 | $16.24 | $1,717.84 | 0.0% |
| 96 | 1956 | 7 | 31 | 0 | 0.0 | 0.0 | 0.0 | 872 | $16.24 | $1,717.84 | $0.00 | $0.00 | $0.00 | $0.00 | $16.24 | $1,717.84 | 0.0% |
| 97 | 1956 | 8 | 31 | 0 | 0.0 | 0.0 | 0.0 | 872 | $16.24 | $1,717.84 | $0.00 | $0.00 | $0.00 | $0.00 | $16.24 | $1,717.84 | 0.0% |
| 98 | 1956 | 9 | 30 | 0 | 0.0 | 0.0 | 0.0 | 872 | $16.24 | $1,717.84 | $0.00 | $0.00 | $0.00 | $0.00 | $16.24 | $1,717.84 | 0.0% |
| 99 | 1956 | 10 | 31 | 0 | 0.0 | 0.0 | 0.0 | 872 | $16.24 | $1,717.84 | $0.00 | $0.00 | $0.00 | $0.00 | $16.24 | $1,717.84 | 0.0% |
| 100 | 1956 | 11 | 30 | 0 | 0.0 | 0.0 | 0.0 | 872 | $16.24 | $1,717.84 | $0.00 | $0.00 | $0.00 | $0.00 | $16.24 | $1,717.84 | 0.0% |
| 101 | 1956 | 12 | 31 | 0 | 0.0 | 0.0 | 0.0 | 872 | $16.24 | $1,717.84 | $0.00 | $0.00 | $0.00 | $0.00 | $16.24 | $1,717.84 | 0.0% |
| 102 | 1957 | 1 | 31 | 0 | 0.0 | 0.0 | 0.0 | 872 | $16.24 | $1,717.84 | $0.00 | $0.00 | $0.00 | $0.00 | $16.24 | $1,717.84 | 0.0% |
| 103 | 1957 | 2 | 28 | 1,062,232 | 1,670.2 | 1,937.2 | 1,743.5 | 1,743 | $16.24 | $3,433.71 | $5,141.85 | $261,522.00 | $800,710.00 | $50,639.44 | $55,797.53 | $55,797.53 | 94.6% |
| 104 | 1957 | 3 | 31 | 481,011 | 1,670.2 | 1,937.2 | 1,743.5 | 1,743 | $16.24 | $3,433.71 | $5,141.85 | $261,522.00 | $219,489.00 | $24,525.18 | $29,683.27 | $29,683.27 | 38.7% |
| 105 | 1957 | 4 | 30 | 889,466 | 2,039.4 | 2,291.0 | 2,061.9 | 2,062 | $16.24 | $4,062.14 | $6,082.90 | $309,292.00 | $580,174.00 | $43,409.22 | $49,508.36 | $49,508.36 | 60.6% |
| 106 | 1957 | 5 | 31 | 1,413,608 | 2,252.9 | 2,502.4 | 2,252.2 | 2,252 | $16.24 | $4,436.44 | $6,643.40 | $337,828.00 | $1,075,780.00 | $67,276.81 | $73,936.45 | $73,936.45 | 84.3% |
| 107 | 1957 | 6 | 30 | 1,500,326 | 2,291.1 | 2,540.7 | 2,286.7 | 2,287 | $16.24 | $4,505.39 | $6,746.65 | $342,998.00 | $1,157,328.00 | $71,230.64 | $77,993.53 | $77,993.53 | 91.0% |
| 108 | 1957 | 7 | 31 | 798,138 | 1,876.1 | 2,137.6 | 1,923.9 | 2,287 | $16.24 | $4,505.39 | $5,675.80 | $288,582.00 | $509,556.00 | $39,075.14 | $44,767.18 | $44,767.18 | 57.2% |
| 109 | 1957 | 8 | 31 | 0 | 0.0 | 0.0 | 0.0 | 2,287 | $16.24 | $4,505.39 | $0.00 | $0.00 | $0.00 | $0.00 | $16.24 | $4,505.39 | 0.0% |
| 110 | 1957 | 9 | 30 | 0 | 0.0 | 0.0 | 0.0 | 2,287 | $16.24 | $4,505.39 | $0.00 | $0.00 | $0.00 | $0.00 | $16.24 | $4,505.39 | 0.0% |
| 111 | 1957 | 10 | 31 | 0 | 0.0 | 0.0 | 0.0 | 2,287 | $16.24 | $4,505.39 | $0.00 | $0.00 | $0.00 | $0.00 | $16.24 | $4,505.39 | 0.0% |
| 112 | 1957 | 11 | 30 | 0 | 0.0 | 0.0 | 0.0 | 2,287 | $16.24 | $4,505.39 | $0.00 | $0.00 | $0.00 | $0.00 | $16.24 | $4,505.39 | 0.0% |
| 113 | 1957 | 12 | 31 | 0 | 0.0 | 0.0 | 0.0 | 2,287 | $16.24 | $4,505.39 | $0.00 | $0.00 | $0.00 | $0.00 | $16.24 | $4,505.39 | 0.0% |
| 114 | 1958 | 1 | 31 | 0 | 0.0 | 0.0 | 0.0 | 2,287 | $16.24 | $4,505.39 | $0.00 | $0.00 | $0.00 | $0.00 | $16.24 | $4,505.39 | 0.0% |
| 115 | 1958 | 2 | 28 | 0 | 0.0 | 0.0 | 0.0 | 2,287 | $16.24 | $4,505.39 | $0.00 | $0.00 | $0.00 | $0.00 | $16.24 | $4,505.39 | 0.0% |
| 116 | 1958 | 3 | 31 | 120,491 | 1,677.9 | 1,944.8 | 1,750.3 | 2,287 | $16.24 | $4,505.39 | $5,162.50 | $262,550.00 | $0.00 | $6,755.94 | $11,934.68 | $11,934.68 | 9.7% |
| 117 | 1958 | 4 | 30 | 403,495 | 1,778.9 | 2,044.0 | 1,839.6 | 2,287 | $16.24 | $4,505.39 | $5,428.00 | $275,943.00 | $127,552.00 | $21,203.04 | $26,647.28 | $26,647.28 | 31.5% |

Little Bayou Meto
Flood Control Pumping Plant
1000-cfs (2 1750-hp)



| | A | B | C | D | E | F | G | H | I | J | K | L | M | N | O | P | Q |
|---|---|---|---|---|---|---|---|---|---|---|---|---|---|---|---|---|---|
| 1 | | | | | | | | | | Minimum | | | | | | | |
| 2 | | | | | | | | | | Monthly | Billing | | | | | | |
| 3 | | | | Metered | | | Billing | Ratchet | Customer | Demand | Demand | Incremental Energy | | Energy | | | Monthly |
| 4 | Period-of-Record | | | Energy | Demands | | Demand | Demand | Charge | Charge | Charge | Block 1 | Block 2 | Charge | Subtotal Bill | Total Bill | Load |
| 5 | YEAR | MO | DAYS | kWh | kWD | kVAD | kWD | kWD | $16.24 | $1.97 | $2.95 | $0.05607 | $0.04493 | kWh | | | Factor |
| 118 | 1958 | 5 | 31 | 1,088,925 | 1,752.1 | 2,017.9 | 1,816.1 | 2,287 | $16.24 | $4,505.39 | $5,357.20 | $272,412.00 | $816,513.00 | $51,960.07 | $57,333.51 | $57,333.51 | 83.5% |
| 119 | 1958 | 6 | 30 | 41,404 | 1,725.2 | 1,991.5 | 1,792.3 | 1,924 | $16.24 | $3,790.28 | $5,286.40 | $268,850.00 | $0.00 | $2,321.50 | $7,624.14 | $7,624.14 | 3.3% |
| 120 | 1958 | 7 | 31 | 443,063 | 1,759.2 | 2,024.8 | 1,822.4 | 1,840 | $16.24 | $3,624.80 | $5,374.90 | $273,353.00 | $169,710.00 | $22,951.97 | $28,343.11 | $28,343.11 | 33.9% |
| 121 | 1958 | 8 | 31 | 0 | 0.0 | 0.0 | 0.0 | 1,840 | $16.24 | $3,624.80 | $0.00 | $0.00 | $0.00 | $0.00 | $16.24 | $3,624.80 | 0.0% |
| 122 | 1958 | 9 | 30 | 0 | 0.0 | 0.0 | 0.0 | 1,840 | $16.24 | $3,624.80 | $0.00 | $0.00 | $0.00 | $0.00 | $16.24 | $3,624.80 | 0.0% |
| 123 | 1958 | 10 | 31 | 0 | 0.0 | 0.0 | 0.0 | 1,840 | $16.24 | $3,624.80 | $0.00 | $0.00 | $0.00 | $0.00 | $16.24 | $3,624.80 | 0.0% |
| 124 | 1958 | 11 | 30 | 0 | 0.0 | 0.0 | 0.0 | 1,840 | $16.24 | $3,624.80 | $0.00 | $0.00 | $0.00 | $0.00 | $16.24 | $3,624.80 | 0.0% |
| 125 | 1958 | 12 | 31 | 0 | 0.0 | 0.0 | 0.0 | 1,840 | $16.24 | $3,624.80 | $0.00 | $0.00 | $0.00 | $0.00 | $16.24 | $3,624.80 | 0.0% |
| 126 | 1959 | 1 | 31 | 0 | 0.0 | 0.0 | 0.0 | 1,840 | $16.24 | $3,624.80 | $0.00 | $0.00 | $0.00 | $0.00 | $16.24 | $3,624.80 | 0.0% |
| 127 | 1959 | 2 | 28 | 0 | 0.0 | 0.0 | 0.0 | 1,840 | $16.24 | $3,624.80 | $0.00 | $0.00 | $0.00 | $0.00 | $16.24 | $3,624.80 | 0.0% |
| 128 | 1959 | 3 | 31 | 0 | 0.0 | 0.0 | 0.0 | 1,840 | $16.24 | $3,624.80 | $0.00 | $0.00 | $0.00 | $0.00 | $16.24 | $3,624.80 | 0.0% |
| 129 | 1959 | 4 | 30 | 0 | 0.0 | 0.0 | 0.0 | 1,822 | $16.24 | $3,589.34 | $0.00 | $0.00 | $0.00 | $0.00 | $16.24 | $3,589.34 | 0.0% |
| 130 | 1959 | 5 | 31 | 0 | 0.0 | 0.0 | 0.0 | 1,822 | $16.24 | $3,589.34 | $0.00 | $0.00 | $0.00 | $0.00 | $16.24 | $3,589.34 | 0.0% |
| 131 | 1959 | 6 | 30 | 0 | 0.0 | 0.0 | 0.0 | 1,822 | $16.24 | $3,589.34 | $0.00 | $0.00 | $0.00 | $0.00 | $16.24 | $3,589.34 | 0.0% |
| 132 | 1959 | 7 | 31 | 100,249 | 1,670.2 | 1,937.2 | 1,743.5 | 1,743 | $16.24 | $3,433.71 | $5,141.85 | $261,522.00 | $0.00 | $5,620.93 | $10,779.02 | $10,779.02 | 8.1% |
| 133 | 1959 | 8 | 31 | 167,731 | 1,766.7 | 2,032.1 | 1,828.9 | 1,829 | $16.24 | $3,603.13 | $5,395.55 | $274,333.00 | $0.00 | $9,404.70 | $14,816.49 | $14,816.49 | 12.8% |
| 134 | 1959 | 9 | 30 | 0 | 0.0 | 0.0 | 0.0 | 1,829 | $16.24 | $3,603.13 | $0.00 | $0.00 | $0.00 | $0.00 | $16.24 | $3,603.13 | 0.0% |
| 135 | 1959 | 10 | 31 | 373,818 | 2,331.3 | 2,580.9 | 2,322.8 | 2,323 | $16.24 | $4,576.31 | $6,852.85 | $348,416.00 | $25,402.00 | $20,677.00 | $27,546.09 | $27,546.09 | 21.6% |
| 136 | 1959 | 11 | 30 | 0 | 0.0 | 0.0 | 0.0 | 2,323 | $16.24 | $4,576.31 | $0.00 | $0.00 | $0.00 | $0.00 | $16.24 | $4,576.31 | 0.0% |
| 137 | 1959 | 12 | 31 | 0 | 0.0 | 0.0 | 0.0 | 2,323 | $16.24 | $4,576.31 | $0.00 | $0.00 | $0.00 | $0.00 | $16.24 | $4,576.31 | 0.0% |
| 138 | 1960 | 1 | 31 | 0 | 0.0 | 0.0 | 0.0 | 2,323 | $16.24 | $4,576.31 | $0.00 | $0.00 | $0.00 | $0.00 | $16.24 | $4,576.31 | 0.0% |
| 139 | 1960 | 2 | 29 | 0 | 0.0 | 0.0 | 0.0 | 2,323 | $16.24 | $4,576.31 | $0.00 | $0.00 | $0.00 | $0.00 | $16.24 | $4,576.31 | 0.0% |
| 140 | 1960 | 3 | 31 | 0 | 0.0 | 0.0 | 0.0 | 2,323 | $16.24 | $4,576.31 | $0.00 | $0.00 | $0.00 | $0.00 | $16.24 | $4,576.31 | 0.0% |
| 141 | 1960 | 4 | 30 | 0 | 0.0 | 0.0 | 0.0 | 2,323 | $16.24 | $4,576.31 | $0.00 | $0.00 | $0.00 | $0.00 | $16.24 | $4,576.31 | 0.0% |
| 142 | 1960 | 5 | 31 | 720,874 | 2,042.1 | 2,293.6 | 2,064.2 | 2,323 | $16.24 | $4,576.31 | $6,088.80 | $309,634.00 | $411,240.00 | $35,838.19 | $41,943.23 | $41,943.23 | 47.4% |
| 143 | 1960 | 6 | 30 | 220,463 | 1,670.2 | 1,937.2 | 1,743.5 | 2,323 | $16.24 | $4,576.31 | $5,141.85 | $261,522.00 | $0.00 | $12,361.37 | $17,519.46 | $17,519.46 | 18.3% |
| 144 | 1960 | 7 | 31 | 481,011 | 1,670.2 | 1,937.2 | 1,743.5 | 2,323 | $16.24 | $4,576.31 | $5,141.85 | $261,522.00 | $219,489.00 | $24,525.18 | $29,683.27 | $29,683.27 | 38.7% |
| 145 | 1960 | 8 | 31 | 0 | 0.0 | 0.0 | 0.0 | 2,323 | $16.24 | $4,576.31 | $0.00 | $0.00 | $0.00 | $0.00 | $16.24 | $4,576.31 | 0.0% |
| 146 | 1960 | 9 | 30 | 0 | 0.0 | 0.0 | 0.0 | 2,323 | $16.24 | $4,576.31 | $0.00 | $0.00 | $0.00 | $0.00 | $16.24 | $4,576.31 | 0.0% |
| 147 | 1960 | 10 | 31 | 0 | 0.0 | 0.0 | 0.0 | 2,064 | $16.24 | $4,066.08 | $0.00 | $0.00 | $0.00 | $0.00 | $16.24 | $4,066.08 | 0.0% |
| 148 | 1960 | 11 | 30 | 0 | 0.0 | 0.0 | 0.0 | 2,064 | $16.24 | $4,066.08 | $0.00 | $0.00 | $0.00 | $0.00 | $16.24 | $4,066.08 | 0.0% |
| 149 | 1960 | 12 | 31 | 0 | 0.0 | 0.0 | 0.0 | 2,064 | $16.24 | $4,066.08 | $0.00 | $0.00 | $0.00 | $0.00 | $16.24 | $4,066.08 | 0.0% |
| 150 | 1961 | 1 | 31 | 0 | 0.0 | 0.0 | 0.0 | 2,064 | $16.24 | $4,066.08 | $0.00 | $0.00 | $0.00 | $0.00 | $16.24 | $4,066.08 | 0.0% |
| 151 | 1961 | 2 | 28 | 0 | 0.0 | 0.0 | 0.0 | 2,064 | $16.24 | $4,066.08 | $0.00 | $0.00 | $0.00 | $0.00 | $16.24 | $4,066.08 | 0.0% |
| 152 | 1961 | 3 | 31 | 0 | 0.0 | 0.0 | 0.0 | 2,064 | $16.24 | $4,066.08 | $0.00 | $0.00 | $0.00 | $0.00 | $16.24 | $4,066.08 | 0.0% |
| 153 | 1961 | 4 | 30 | 886,821 | 1,762.7 | 2,028.3 | 1,825.4 | 2,064 | $16.24 | $4,066.08 | $5,383.75 | $273,814.00 | $613,007.00 | $42,895.16 | $48,295.15 | $48,295.15 | 69.9% |
| 154 | 1961 | 5 | 31 | 1,052,124 | 1,901.7 | 2,162.0 | 1,945.8 | 1,946 | $16.24 | $3,833.62 | $5,740.70 | $291,875.00 | $760,249.00 | $50,523.42 | $56,280.36 | $56,280.36 | 74.4% |
| 155 | 1961 | 6 | 30 | 321,443 | 1,691.8 | 1,958.7 | 1,762.8 | 1,946 | $16.24 | $3,833.62 | $5,200.85 | $264,419.00 | $57,024.00 | $17,388.06 | $22,605.15 | $22,605.15 | 26.4% |
| 156 | 1961 | 7 | 31 | 80,775 | 1,693.2 | 1,960.0 | 1,764.0 | 1,946 | $16.24 | $3,833.62 | $5,203.80 | $264,599.00 | $0.00 | $4,529.06 | $9,749.10 | $9,749.10 | 6.4% |
| 157 | 1961 | 8 | 31 | 0 | 0.0 | 0.0 | 0.0 | 1,946 | $16.24 | $3,833.62 | $0.00 | $0.00 | $0.00 | $0.00 | $16.24 | $3,833.62 | 0.0% |
| 158 | 1961 | 9 | 30 | 0 | 0.0 | 0.0 | 0.0 | 1,946 | $16.24 | $3,833.62 | $0.00 | $0.00 | $0.00 | $0.00 | $16.24 | $3,833.62 | 0.0% |
| 159 | 1961 | 10 | 31 | 0 | 0.0 | 0.0 | 0.0 | 1,946 | $16.24 | $3,833.62 | $0.00 | $0.00 | $0.00 | $0.00 | $16.24 | $3,833.62 | 0.0% |
| 160 | 1961 | 11 | 30 | 0 | 0.0 | 0.0 | 0.0 | 1,946 | $16.24 | $3,833.62 | $0.00 | $0.00 | $0.00 | $0.00 | $16.24 | $3,833.62 | 0.0% |
| 161 | 1961 | 12 | 31 | 601,263 | 1,670.2 | 1,937.2 | 1,743.5 | 1,946 | $16.24 | $3,833.62 | $5,141.85 | $261,522.00 | $339,741.00 | $29,928.10 | $35,086.19 | $35,086.19 | 48.4% |
| 162 | 1962 | 1 | 31 | 521,095 | 1,670.2 | 1,937.2 | 1,743.5 | 1,946 | $16.24 | $3,833.62 | $5,141.85 | $261,522.00 | $259,573.00 | $26,326.15 | $31,484.24 | $31,484.24 | 41.9% |
| 163 | 1962 | 2 | 28 | 0 | 0.0 | 0.0 | 0.0 | 1,946 | $16.24 | $3,833.62 | $0.00 | $0.00 | $0.00 | $0.00 | $16.24 | $3,833.62 | 0.0% |
| 164 | 1962 | 3 | 31 | 360,758 | 835.1 | 968.6 | 871.7 | 1,946 | $16.24 | $3,833.62 | $2,572.40 | $130,761.00 | $229,997.00 | $17,665.53 | $20,254.17 | $20,254.17 | 58.1% |
| 165 | 1962 | 4 | 30 | 0 | 0.0 | 0.0 | 0.0 | 1,946 | $16.24 | $3,833.62 | $0.00 | $0.00 | $0.00 | $0.00 | $16.24 | $3,833.62 | 0.0% |
| 166 | 1962 | 5 | 31 | 0 | 0.0 | 0.0 | 0.0 | 1,764 | $16.24 | $3,475.08 | $0.00 | $0.00 | $0.00 | $0.00 | $16.24 | $3,475.08 | 0.0% |
| 167 | 1962 | 6 | 30 | 0 | 0.0 | 0.0 | 0.0 | 1,764 | $16.24 | $3,475.08 | $0.00 | $0.00 | $0.00 | $0.00 | $16.24 | $3,475.08 | 0.0% |
| 168 | 1962 | 7 | 31 | 0 | 0.0 | 0.0 | 0.0 | 1,743 | $16.24 | $3,433.71 | $0.00 | $0.00 | $0.00 | $0.00 | $16.24 | $3,433.71 | 0.0% |
| 169 | 1962 | 8 | 31 | 0 | 0.0 | 0.0 | 0.0 | 1,743 | $16.24 | $3,433.71 | $0.00 | $0.00 | $0.00 | $0.00 | $16.24 | $3,433.71 | 0.0% |
| 170 | 1962 | 9 | 30 | 0 | 0.0 | 0.0 | 0.0 | 1,743 | $16.24 | $3,433.71 | $0.00 | $0.00 | $0.00 | $0.00 | $16.24 | $3,433.71 | 0.0% |
| 171 | 1962 | 10 | 31 | 0 | 0.0 | 0.0 | 0.0 | 1,743 | $16.24 | $3,433.71 | $0.00 | $0.00 | $0.00 | $0.00 | $16.24 | $3,433.71 | 0.0% |
| 172 | 1962 | 11 | 30 | 0 | 0.0 | 0.0 | 0.0 | 1,743 | $16.24 | $3,433.71 | $0.00 | $0.00 | $0.00 | $0.00 | $16.24 | $3,433.71 | 0.0% |
| 173 | 1962 | 12 | 31 | 0 | 0.0 | 0.0 | 0.0 | 1,743 | $16.24 | $3,433.71 | $0.00 | $0.00 | $0.00 | $0.00 | $16.24 | $3,433.71 | 0.0% |

Little Bayou Meto
Flood Control Pumping Plant
1000-cfs (2 1750-hp)



| | A | B | C | D | E | F | G | H | I | J | K | L | M | N | O | P | Q |
|---|---|---|---|---|---|---|---|---|---|---|---|---|---|---|---|---|---|
| 1 | | | | | | | | | | Minimum | | | | | | | |
| 2 | | | | | | | | | | Monthly | Billing | | | | | | |
| 3 | | | | Metered | | | Billing | Ratchet | Customer | Demand | Demand | Incremental Energy | | Energy | | | Monthly |
| 4 | Period-of-Record | | | Energy | Demands | | Demand | Demand | Charge | Charge | Charge | Block 1 | Block 2 | Charge | Subtotal Bill | Total Bill | Load |
| 5 | YEAR | MO | DAYS | kWh | kWD | kVAD | kWD | kWD | $16.24 | $1.97 | $2.95 | $0.05607 | $0.04493 | kWh | | | Factor |
| 174 | 1963 | 1 | 31 | 0 | 0.0 | 0.0 | 0.0 | 872 | $16.24 | $1,717.84 | $0.00 | $0.00 | $0.00 | $0.00 | $16.24 | $1,717.84 | 0.0% |
| 175 | 1963 | 2 | 28 | 0 | 0.0 | 0.0 | 0.0 | 872 | $16.24 | $1,717.84 | $0.00 | $0.00 | $0.00 | $0.00 | $16.24 | $1,717.84 | 0.0% |
| 176 | 1963 | 3 | 31 | 0 | 0.0 | 0.0 | 0.0 | 0 | $16.24 | $0.00 | $0.00 | $0.00 | $0.00 | $0.00 | $16.24 | $16.24 | 0.0% |
| 177 | 1963 | 4 | 30 | 0 | 0.0 | 0.0 | 0.0 | 0 | $16.24 | $0.00 | $0.00 | $0.00 | $0.00 | $0.00 | $16.24 | $16.24 | 0.0% |
| 178 | 1963 | 5 | 31 | 320,674 | 835.1 | 968.6 | 871.7 | 872 | $16.24 | $1,717.84 | $2,572.40 | $130,761.00 | $189,913.00 | $15,864.56 | $18,453.20 | $18,453.20 | 51.6% |
| 179 | 1963 | 6 | 30 | 0 | 0.0 | 0.0 | 0.0 | 872 | $16.24 | $1,717.84 | $0.00 | $0.00 | $0.00 | $0.00 | $16.24 | $1,717.84 | 0.0% |
| 180 | 1963 | 7 | 31 | 0 | 0.0 | 0.0 | 0.0 | 872 | $16.24 | $1,717.84 | $0.00 | $0.00 | $0.00 | $0.00 | $16.24 | $1,717.84 | 0.0% |
| 181 | 1963 | 8 | 31 | 0 | 0.0 | 0.0 | 0.0 | 872 | $16.24 | $1,717.84 | $0.00 | $0.00 | $0.00 | $0.00 | $16.24 | $1,717.84 | 0.0% |
| 182 | 1963 | 9 | 30 | 0 | 0.0 | 0.0 | 0.0 | 872 | $16.24 | $1,717.84 | $0.00 | $0.00 | $0.00 | $0.00 | $16.24 | $1,717.84 | 0.0% |
| 183 | 1963 | 10 | 31 | 0 | 0.0 | 0.0 | 0.0 | 872 | $16.24 | $1,717.84 | $0.00 | $0.00 | $0.00 | $0.00 | $16.24 | $1,717.84 | 0.0% |
| 184 | 1963 | 11 | 30 | 0 | 0.0 | 0.0 | 0.0 | 872 | $16.24 | $1,717.84 | $0.00 | $0.00 | $0.00 | $0.00 | $16.24 | $1,717.84 | 0.0% |
| 185 | 1963 | 12 | 31 | 0 | 0.0 | 0.0 | 0.0 | 872 | $16.24 | $1,717.84 | $0.00 | $0.00 | $0.00 | $0.00 | $16.24 | $1,717.84 | 0.0% |
| 186 | 1964 | 1 | 31 | 0 | 0.0 | 0.0 | 0.0 | 872 | $16.24 | $1,717.84 | $0.00 | $0.00 | $0.00 | $0.00 | $16.24 | $1,717.84 | 0.0% |
| 187 | 1964 | 2 | 29 | 0 | 0.0 | 0.0 | 0.0 | 872 | $16.24 | $1,717.84 | $0.00 | $0.00 | $0.00 | $0.00 | $16.24 | $1,717.84 | 0.0% |
| 188 | 1964 | 3 | 31 | 400,842 | 835.1 | 968.6 | 871.7 | 872 | $16.24 | $1,717.84 | $2,572.40 | $130,761.00 | $270,081.00 | $19,466.51 | $22,055.15 | $22,055.15 | 64.5% |
| 189 | 1964 | 4 | 30 | 921,937 | 1,670.2 | 1,937.2 | 1,743.5 | 1,743 | $16.24 | $3,433.71 | $5,141.85 | $261,522.00 | $660,415.00 | $44,335.98 | $49,494.07 | $49,494.07 | 76.7% |
| 190 | 1964 | 5 | 31 | 440,926 | 1,670.2 | 1,937.2 | 1,743.5 | 1,743 | $16.24 | $3,433.71 | $5,141.85 | $261,522.00 | $179,404.00 | $22,724.16 | $27,882.25 | $27,882.25 | 35.5% |
| 191 | 1964 | 6 | 30 | 0 | 0.0 | 0.0 | 0.0 | 1,743 | $16.24 | $3,433.71 | $0.00 | $0.00 | $0.00 | $0.00 | $16.24 | $3,433.71 | 0.0% |
| 192 | 1964 | 7 | 31 | 0 | 0.0 | 0.0 | 0.0 | 1,743 | $16.24 | $3,433.71 | $0.00 | $0.00 | $0.00 | $0.00 | $16.24 | $3,433.71 | 0.0% |
| 193 | 1964 | 8 | 31 | 0 | 0.0 | 0.0 | 0.0 | 1,743 | $16.24 | $3,433.71 | $0.00 | $0.00 | $0.00 | $0.00 | $16.24 | $3,433.71 | 0.0% |
| 194 | 1964 | 9 | 30 | 0 | 0.0 | 0.0 | 0.0 | 1,743 | $16.24 | $3,433.71 | $0.00 | $0.00 | $0.00 | $0.00 | $16.24 | $3,433.71 | 0.0% |
| 195 | 1964 | 10 | 31 | 0 | 0.0 | 0.0 | 0.0 | 1,743 | $16.24 | $3,433.71 | $0.00 | $0.00 | $0.00 | $0.00 | $16.24 | $3,433.71 | 0.0% |
| 196 | 1964 | 11 | 30 | 0 | 0.0 | 0.0 | 0.0 | 1,743 | $16.24 | $3,433.71 | $0.00 | $0.00 | $0.00 | $0.00 | $16.24 | $3,433.71 | 0.0% |
| 197 | 1964 | 12 | 31 | 400,842 | 835.1 | 968.6 | 871.7 | 1,743 | $16.24 | $3,433.71 | $2,572.40 | $130,761.00 | $270,081.00 | $19,466.51 | $22,055.15 | $22,055.15 | 64.5% |
| 198 | 1965 | 1 | 31 | 0 | 0.0 | 0.0 | 0.0 | 1,743 | $16.24 | $3,433.71 | $0.00 | $0.00 | $0.00 | $0.00 | $16.24 | $3,433.71 | 0.0% |
| 199 | 1965 | 2 | 28 | 601,263 | 1,670.2 | 1,937.2 | 1,743.5 | 1,743 | $16.24 | $3,433.71 | $5,141.85 | $261,522.00 | $339,741.00 | $29,928.10 | $35,086.19 | $35,086.19 | 53.6% |
| 200 | 1965 | 3 | 31 | 0 | 0.0 | 0.0 | 0.0 | 1,743 | $16.24 | $3,433.71 | $0.00 | $0.00 | $0.00 | $0.00 | $16.24 | $3,433.71 | 0.0% |
| 201 | 1965 | 4 | 30 | 219,249 | 2,057.9 | 2,308.1 | 2,077.3 | 2,077 | $16.24 | $4,091.69 | $6,127.15 | $311,595.00 | $0.00 | $12,293.32 | $18,436.71 | $18,436.71 | 14.8% |
| 202 | 1965 | 5 | 31 | 0 | 0.0 | 0.0 | 0.0 | 2,077 | $16.24 | $4,091.69 | $0.00 | $0.00 | $0.00 | $0.00 | $16.24 | $4,091.69 | 0.0% |
| 203 | 1965 | 6 | 30 | 0 | 0.0 | 0.0 | 0.0 | 2,077 | $16.24 | $4,091.69 | $0.00 | $0.00 | $0.00 | $0.00 | $16.24 | $4,091.69 | 0.0% |
| 204 | 1965 | 7 | 31 | 0 | 0.0 | 0.0 | 0.0 | 2,077 | $16.24 | $4,091.69 | $0.00 | $0.00 | $0.00 | $0.00 | $16.24 | $4,091.69 | 0.0% |
| 205 | 1965 | 8 | 31 | 0 | 0.0 | 0.0 | 0.0 | 2,077 | $16.24 | $4,091.69 | $0.00 | $0.00 | $0.00 | $0.00 | $16.24 | $4,091.69 | 0.0% |
| 206 | 1965 | 9 | 30 | 0 | 0.0 | 0.0 | 0.0 | 2,077 | $16.24 | $4,091.69 | $0.00 | $0.00 | $0.00 | $0.00 | $16.24 | $4,091.69 | 0.0% |
| 207 | 1965 | 10 | 31 | 0 | 0.0 | 0.0 | 0.0 | 2,077 | $16.24 | $4,091.69 | $0.00 | $0.00 | $0.00 | $0.00 | $16.24 | $4,091.69 | 0.0% |
| 208 | 1965 | 11 | 30 | 0 | 0.0 | 0.0 | 0.0 | 2,077 | $16.24 | $4,091.69 | $0.00 | $0.00 | $0.00 | $0.00 | $16.24 | $4,091.69 | 0.0% |
| 209 | 1965 | 12 | 31 | 0 | 0.0 | 0.0 | 0.0 | 2,077 | $16.24 | $4,091.69 | $0.00 | $0.00 | $0.00 | $0.00 | $16.24 | $4,091.69 | 0.0% |
| 210 | 1966 | 1 | 31 | 0 | 0.0 | 0.0 | 0.0 | 2,077 | $16.24 | $4,091.69 | $0.00 | $0.00 | $0.00 | $0.00 | $16.24 | $4,091.69 | 0.0% |
| 211 | 1966 | 2 | 28 | 621,305 | 1,670.2 | 1,937.2 | 1,743.5 | 2,077 | $16.24 | $4,091.69 | $5,141.85 | $261,522.00 | $359,783.00 | $30,828.59 | $35,986.68 | $35,986.68 | 55.4% |
| 212 | 1966 | 3 | 31 | 0 | 0.0 | 0.0 | 0.0 | 2,077 | $16.24 | $4,091.69 | $0.00 | $0.00 | $0.00 | $0.00 | $16.24 | $4,091.69 | 0.0% |
| 213 | 1966 | 4 | 30 | 120,437 | 1,677.9 | 1,944.8 | 1,750.3 | 1,750 | $16.24 | $3,447.50 | $5,162.50 | $262,550.00 | $0.00 | $6,752.90 | $11,931.64 | $11,931.64 | 10.0% |
| 214 | 1966 | 5 | 31 | 521,095 | 1,670.2 | 1,937.2 | 1,743.5 | 1,750 | $16.24 | $3,447.50 | $5,141.85 | $261,522.00 | $259,573.00 | $26,326.15 | $31,484.24 | $31,484.24 | 41.9% |
| 215 | 1966 | 6 | 30 | 0 | 0.0 | 0.0 | 0.0 | 1,750 | $16.24 | $3,447.50 | $0.00 | $0.00 | $0.00 | $0.00 | $16.24 | $3,447.50 | 0.0% |
| 216 | 1966 | 7 | 31 | 0 | 0.0 | 0.0 | 0.0 | 1,750 | $16.24 | $3,447.50 | $0.00 | $0.00 | $0.00 | $0.00 | $16.24 | $3,447.50 | 0.0% |
| 217 | 1966 | 8 | 31 | 0 | 0.0 | 0.0 | 0.0 | 1,750 | $16.24 | $3,447.50 | $0.00 | $0.00 | $0.00 | $0.00 | $16.24 | $3,447.50 | 0.0% |
| 218 | 1966 | 9 | 30 | 0 | 0.0 | 0.0 | 0.0 | 1,750 | $16.24 | $3,447.50 | $0.00 | $0.00 | $0.00 | $0.00 | $16.24 | $3,447.50 | 0.0% |
| 219 | 1966 | 10 | 31 | 0 | 0.0 | 0.0 | 0.0 | 1,750 | $16.24 | $3,447.50 | $0.00 | $0.00 | $0.00 | $0.00 | $16.24 | $3,447.50 | 0.0% |
| 220 | 1966 | 11 | 30 | 0 | 0.0 | 0.0 | 0.0 | 1,750 | $16.24 | $3,447.50 | $0.00 | $0.00 | $0.00 | $0.00 | $16.24 | $3,447.50 | 0.0% |
| 221 | 1966 | 12 | 31 | 0 | 0.0 | 0.0 | 0.0 | 1,750 | $16.24 | $3,447.50 | $0.00 | $0.00 | $0.00 | $0.00 | $16.24 | $3,447.50 | 0.0% |
| 222 | 1967 | 1 | 31 | 0 | 0.0 | 0.0 | 0.0 | 1,750 | $16.24 | $3,447.50 | $0.00 | $0.00 | $0.00 | $0.00 | $16.24 | $3,447.50 | 0.0% |
| 223 | 1967 | 2 | 28 | 0 | 0.0 | 0.0 | 0.0 | 1,750 | $16.24 | $3,447.50 | $0.00 | $0.00 | $0.00 | $0.00 | $16.24 | $3,447.50 | 0.0% |
| 224 | 1967 | 3 | 31 | 0 | 0.0 | 0.0 | 0.0 | 1,750 | $16.24 | $3,447.50 | $0.00 | $0.00 | $0.00 | $0.00 | $16.24 | $3,447.50 | 0.0% |
| 225 | 1967 | 4 | 30 | 40,084 | 835.1 | 968.6 | 871.7 | 1,743 | $16.24 | $3,433.71 | $2,572.40 | $130,761.00 | $0.00 | $2,247.52 | $4,836.16 | $4,836.16 | 6.7% |
| 226 | 1967 | 5 | 31 | 821,727 | 1,670.2 | 1,937.2 | 1,743.5 | 1,743 | $16.24 | $3,433.71 | $5,141.85 | $261,522.00 | $560,205.00 | $39,833.55 | $44,991.64 | $44,991.64 | 66.1% |
| 227 | 1967 | 6 | 30 | 0 | 0.0 | 0.0 | 0.0 | 1,743 | $16.24 | $3,433.71 | $0.00 | $0.00 | $0.00 | $0.00 | $16.24 | $3,433.71 | 0.0% |
| 228 | 1967 | 7 | 31 | 0 | 0.0 | 0.0 | 0.0 | 1,743 | $16.24 | $3,433.71 | $0.00 | $0.00 | $0.00 | $0.00 | $16.24 | $3,433.71 | 0.0% |
| 229 | 1967 | 8 | 31 | 0 | 0.0 | 0.0 | 0.0 | 1,743 | $16.24 | $3,433.71 | $0.00 | $0.00 | $0.00 | $0.00 | $16.24 | $3,433.71 | 0.0% |

Little Bayou Meto
Flood Control Pumping Plant
1000-cfs (2 1750-hp)



| | A | B | C | D | E | F | G | H | I | J | K | L | M | N | O | P | Q |
|---|---|---|---|---|---|---|---|---|---|---|---|---|---|---|---|---|---|
| 1 | | | | | | | | | | Minimum | | | | | | | |
| 2 | | | | | | | | | | Monthly | Billing | | | | | | |
| 3 | | | | Metered | | | Billing | Ratchet | Customer | Demand | Demand | Incremental Energy | | Energy | | | Monthly |
| 4 | Period-of-Record | | | Energy | Demands | | Demand | Demand | Charge | Charge | Charge | Block 1 | Block 2 | Charge | Subtotal Bill | Total Bill | Load |
| 5 | YEAR | MO | DAYS | kWh | kWD | kVAD | kWD | kWD | $16.24 | $1.97 | $2.95 | $0.05607 | $0.04493 | kWh | | | Factor |
| 230 | 1967 | 9 | 30 | 0 | 0.0 | 0.0 | 0.0 | 1,743 | $16.24 | $3,433.71 | $0.00 | $0.00 | $0.00 | $0.00 | $16.24 | $3,433.71 | 0.0% |
| 231 | 1967 | 10 | 31 | 0 | 0.0 | 0.0 | 0.0 | 1,743 | $16.24 | $3,433.71 | $0.00 | $0.00 | $0.00 | $0.00 | $16.24 | $3,433.71 | 0.0% |
| 232 | 1967 | 11 | 30 | 0 | 0.0 | 0.0 | 0.0 | 1,743 | $16.24 | $3,433.71 | $0.00 | $0.00 | $0.00 | $0.00 | $16.24 | $3,433.71 | 0.0% |
| 233 | 1967 | 12 | 31 | 0 | 0.0 | 0.0 | 0.0 | 1,743 | $16.24 | $3,433.71 | $0.00 | $0.00 | $0.00 | $0.00 | $16.24 | $3,433.71 | 0.0% |
| 234 | 1968 | 1 | 31 | 0 | 0.0 | 0.0 | 0.0 | 1,743 | $16.24 | $3,433.71 | $0.00 | $0.00 | $0.00 | $0.00 | $16.24 | $3,433.71 | 0.0% |
| 235 | 1968 | 2 | 29 | 0 | 0.0 | 0.0 | 0.0 | 1,743 | $16.24 | $3,433.71 | $0.00 | $0.00 | $0.00 | $0.00 | $16.24 | $3,433.71 | 0.0% |
| 236 | 1968 | 3 | 31 | 344,841 | 1,747.2 | 2,013.0 | 1,811.7 | 1,812 | $16.24 | $3,569.64 | $5,345.40 | $271,761.00 | $73,080.00 | $18,521.12 | $23,882.76 | $23,882.76 | 26.5% |
| 237 | 1968 | 4 | 30 | 1,046,199 | 2,036.6 | 2,288.5 | 2,059.7 | 2,060 | $16.24 | $4,058.20 | $6,077.00 | $308,949.00 | $737,250.00 | $50,447.41 | $56,540.65 | $56,540.65 | 71.3% |
| 238 | 1968 | 5 | 31 | 870,648 | 1,791.2 | 2,055.9 | 1,850.3 | 2,060 | $16.24 | $4,058.20 | $5,457.50 | $277,547.00 | $593,101.00 | $42,210.09 | $47,683.83 | $47,683.83 | 65.3% |
| 239 | 1968 | 6 | 30 | 204,831 | 1,829.1 | 2,092.6 | 1,883.3 | 2,060 | $16.24 | $4,058.20 | $5,554.85 | $282,497.00 | $0.00 | $11,484.87 | $17,055.96 | $17,055.96 | 15.6% |
| 240 | 1968 | 7 | 31 | 0 | 0.0 | 0.0 | 0.0 | 2,060 | $16.24 | $4,058.20 | $0.00 | $0.00 | $0.00 | $0.00 | $16.24 | $4,058.20 | 0.0% |
| 241 | 1968 | 8 | 31 | 0 | 0.0 | 0.0 | 0.0 | 2,060 | $16.24 | $4,058.20 | $0.00 | $0.00 | $0.00 | $0.00 | $16.24 | $4,058.20 | 0.0% |
| 242 | 1968 | 9 | 30 | 0 | 0.0 | 0.0 | 0.0 | 2,060 | $16.24 | $4,058.20 | $0.00 | $0.00 | $0.00 | $0.00 | $16.24 | $4,058.20 | 0.0% |
| 243 | 1968 | 10 | 31 | 0 | 0.0 | 0.0 | 0.0 | 2,060 | $16.24 | $4,058.20 | $0.00 | $0.00 | $0.00 | $0.00 | $16.24 | $4,058.20 | 0.0% |
| 244 | 1968 | 11 | 30 | 0 | 0.0 | 0.0 | 0.0 | 2,060 | $16.24 | $4,058.20 | $0.00 | $0.00 | $0.00 | $0.00 | $16.24 | $4,058.20 | 0.0% |
| 245 | 1968 | 12 | 31 | 748,956 | 1,796.4 | 2,061.0 | 1,854.9 | 2,060 | $16.24 | $4,058.20 | $5,472.25 | $278,233.00 | $470,723.00 | $36,750.11 | $42,238.60 | $42,238.60 | 56.0% |
| 246 | 1969 | 1 | 31 | 245,302 | 1,773.2 | 2,038.5 | 1,834.6 | 2,060 | $16.24 | $4,058.20 | $5,413.25 | $275,196.00 | $0.00 | $13,754.07 | $19,183.56 | $19,183.56 | 18.6% |
| 247 | 1969 | 2 | 28 | 1,142,801 | 1,803.4 | 2,067.7 | 1,861.0 | 2,060 | $16.24 | $4,058.20 | $5,489.95 | $279,146.00 | $863,655.00 | $54,455.74 | $59,961.93 | $59,961.93 | 94.3% |
| 248 | 1969 | 3 | 31 | 417,930 | 1,960.1 | 2,217.2 | 1,995.5 | 2,060 | $16.24 | $4,058.20 | $5,885.25 | $299,322.00 | $118,608.00 | $22,112.04 | $28,013.53 | $28,013.53 | 28.7% |
| 249 | 1969 | 4 | 30 | 654,019 | 1,923.5 | 2,182.6 | 1,964.4 | 1,995 | $16.24 | $3,930.15 | $5,793.80 | $294,655.00 | $359,364.00 | $32,667.53 | $38,477.57 | $38,477.57 | 47.2% |
| 250 | 1969 | 5 | 31 | 999,993 | 1,996.3 | 2,251.0 | 2,025.9 | 2,026 | $16.24 | $3,991.22 | $5,976.70 | $303,891.00 | $696,102.00 | $48,315.03 | $54,307.97 | $54,307.97 | 67.3% |
| 251 | 1969 | 6 | 30 | 576,097 | 1,891.9 | 2,152.7 | 1,937.4 | 2,026 | $16.24 | $3,991.22 | $5,714.15 | $290,616.00 | $285,481.00 | $29,121.50 | $34,851.89 | $34,851.89 | 42.3% |
| 252 | 1969 | 7 | 31 | 402,197 | 1,974.6 | 2,230.7 | 2,007.6 | 2,026 | $16.24 | $3,991.22 | $5,923.60 | $301,146.00 | $101,051.00 | $21,425.48 | $27,365.32 | $27,365.32 | 27.4% |
| 253 | 1969 | 8 | 31 | 0 | 0.0 | 0.0 | 0.0 | 2,026 | $16.24 | $3,991.22 | $0.00 | $0.00 | $0.00 | $0.00 | $16.24 | $3,991.22 | 0.0% |
| 254 | 1969 | 9 | 30 | 0 | 0.0 | 0.0 | 0.0 | 2,026 | $16.24 | $3,991.22 | $0.00 | $0.00 | $0.00 | $0.00 | $16.24 | $3,991.22 | 0.0% |
| 255 | 1969 | 10 | 31 | 0 | 0.0 | 0.0 | 0.0 | 2,026 | $16.24 | $3,991.22 | $0.00 | $0.00 | $0.00 | $0.00 | $16.24 | $3,991.22 | 0.0% |
| 256 | 1969 | 11 | 30 | 0 | 0.0 | 0.0 | 0.0 | 2,026 | $16.24 | $3,991.22 | $0.00 | $0.00 | $0.00 | $0.00 | $16.24 | $3,991.22 | 0.0% |
| 257 | 1969 | 12 | 31 | 0 | 0.0 | 0.0 | 0.0 | 2,026 | $16.24 | $3,991.22 | $0.00 | $0.00 | $0.00 | $0.00 | $16.24 | $3,991.22 | 0.0% |
| 258 | 1970 | 1 | 31 | 601,838 | 1,685.1 | 1,952.0 | 1,756.8 | 2,026 | $16.24 | $3,991.22 | $5,183.15 | $263,515.00 | $338,323.00 | $29,976.14 | $35,175.53 | $35,175.53 | 48.0% |
| 259 | 1970 | 2 | 28 | 0 | 0.0 | 0.0 | 0.0 | 2,026 | $16.24 | $3,991.22 | $0.00 | $0.00 | $0.00 | $0.00 | $16.24 | $3,991.22 | 0.0% |
| 260 | 1970 | 3 | 31 | 1,043,067 | 1,695.4 | 1,962.2 | 1,766.0 | 2,026 | $16.24 | $3,991.22 | $5,209.70 | $264,900.00 | $778,167.00 | $49,815.99 | $55,041.93 | $55,041.93 | 82.7% |
| 261 | 1970 | 4 | 30 | 1,030,240 | 1,843.4 | 2,106.4 | 1,895.7 | 2,026 | $16.24 | $3,991.22 | $5,593.20 | $284,360.00 | $745,880.00 | $49,456.45 | $55,065.89 | $55,065.89 | 77.6% |
| 262 | 1970 | 5 | 31 | 1,089,022 | 1,748.9 | 2,014.8 | 1,813.3 | 2,008 | $16.24 | $3,955.76 | $5,348.35 | $271,998.00 | $817,024.00 | $51,959.82 | $57,324.41 | $57,324.41 | 83.7% |
| 263 | 1970 | 6 | 30 | 249,930 | 1,853.8 | 2,116.4 | 1,904.7 | 2,008 | $16.24 | $3,955.76 | $5,619.75 | $285,708.00 | $0.00 | $14,013.60 | $19,649.59 | $19,649.59 | 18.7% |
| 264 | 1970 | 7 | 31 | 0 | 0.0 | 0.0 | 0.0 | 1,905 | $16.24 | $3,752.85 | $0.00 | $0.00 | $0.00 | $0.00 | $16.24 | $3,752.85 | 0.0% |
| 265 | 1970 | 8 | 31 | 0 | 0.0 | 0.0 | 0.0 | 1,905 | $16.24 | $3,752.85 | $0.00 | $0.00 | $0.00 | $0.00 | $16.24 | $3,752.85 | 0.0% |
| 266 | 1970 | 9 | 30 | 0 | 0.0 | 0.0 | 0.0 | 1,905 | $16.24 | $3,752.85 | $0.00 | $0.00 | $0.00 | $0.00 | $16.24 | $3,752.85 | 0.0% |
| 267 | 1970 | 10 | 31 | 91,354 | 1,999.1 | 2,253.7 | 2,028.3 | 2,028 | $16.24 | $3,995.16 | $5,982.60 | $304,243.00 | $0.00 | $5,122.21 | $11,121.05 | $11,121.05 | 6.1% |
| 268 | 1970 | 11 | 30 | 530,269 | 2,031.2 | 2,283.4 | 2,055.1 | 2,055 | $16.24 | $4,048.35 | $6,062.25 | $308,264.00 | $222,005.00 | $27,259.05 | $33,337.54 | $33,337.54 | 36.3% |
| 269 | 1970 | 12 | 31 | 0 | 0.0 | 0.0 | 0.0 | 2,055 | $16.24 | $4,048.35 | $0.00 | $0.00 | $0.00 | $0.00 | $16.24 | $4,048.35 | 0.0% |
| 270 | 1971 | 1 | 31 | 413,454 | 1,818.2 | 2,082.1 | 1,873.9 | 2,055 | $16.24 | $4,048.35 | $5,528.30 | $281,080.00 | $132,374.00 | $21,707.72 | $27,252.26 | $27,252.26 | 30.6% |
| 271 | 1971 | 2 | 28 | 0 | 0.0 | 0.0 | 0.0 | 2,055 | $16.24 | $4,048.35 | $0.00 | $0.00 | $0.00 | $0.00 | $16.24 | $4,048.35 | 0.0% |
| 272 | 1971 | 3 | 31 | 949,115 | 1,830.0 | 2,093.4 | 1,884.1 | 2,055 | $16.24 | $4,048.35 | $5,557.80 | $282,610.00 | $666,505.00 | $45,792.01 | $51,366.05 | $51,366.05 | 69.7% |
| 273 | 1971 | 4 | 30 | 200,421 | 1,670.2 | 1,937.2 | 1,743.5 | 2,055 | $16.24 | $4,048.35 | $5,141.85 | $261,522.00 | $0.00 | $11,237.61 | $16,395.70 | $16,395.70 | 16.7% |
| 274 | 1971 | 5 | 31 | 0 | 0.0 | 0.0 | 0.0 | 2,055 | $16.24 | $4,048.35 | $0.00 | $0.00 | $0.00 | $0.00 | $16.24 | $4,048.35 | 0.0% |
| 275 | 1971 | 6 | 30 | 0 | 0.0 | 0.0 | 0.0 | 2,055 | $16.24 | $4,048.35 | $0.00 | $0.00 | $0.00 | $0.00 | $16.24 | $4,048.35 | 0.0% |
| 276 | 1971 | 7 | 31 | 0 | 0.0 | 0.0 | 0.0 | 2,055 | $16.24 | $4,048.35 | $0.00 | $0.00 | $0.00 | $0.00 | $16.24 | $4,048.35 | 0.0% |
| 277 | 1971 | 8 | 31 | 0 | 0.0 | 0.0 | 0.0 | 2,055 | $16.24 | $4,048.35 | $0.00 | $0.00 | $0.00 | $0.00 | $16.24 | $4,048.35 | 0.0% |
| 278 | 1971 | 9 | 30 | 0 | 0.0 | 0.0 | 0.0 | 2,055 | $16.24 | $4,048.35 | $0.00 | $0.00 | $0.00 | $0.00 | $16.24 | $4,048.35 | 0.0% |
| 279 | 1971 | 10 | 31 | 0 | 0.0 | 0.0 | 0.0 | 2,055 | $16.24 | $4,048.35 | $0.00 | $0.00 | $0.00 | $0.00 | $16.24 | $4,048.35 | 0.0% |
| 280 | 1971 | 11 | 30 | 0 | 0.0 | 0.0 | 0.0 | 1,884 | $16.24 | $3,711.48 | $0.00 | $0.00 | $0.00 | $0.00 | $16.24 | $3,711.48 | 0.0% |
| 281 | 1971 | 12 | 31 | 1,035,303 | 1,868.0 | 2,129.9 | 1,916.9 | 1,917 | $16.24 | $3,776.49 | $5,655.15 | $287,534.00 | $747,769.00 | $49,719.29 | $55,390.68 | $55,390.68 | 74.5% |
| 282 | 1972 | 1 | 31 | 613,290 | 1,876.5 | 2,138.1 | 1,924.2 | 1,924 | $16.24 | $3,790.28 | $5,675.80 | $288,637.00 | $324,653.00 | $30,770.54 | $36,462.58 | $36,462.58 | 43.9% |
| 283 | 1972 | 2 | 29 | 168,281 | 1,759.7 | 2,025.3 | 1,822.7 | 1,924 | $16.24 | $3,790.28 | $5,377.85 | $273,410.00 | $0.00 | $9,435.49 | $14,829.58 | $14,829.58 | 13.7% |
| 284 | 1972 | 3 | 31 | 624,520 | 887.7 | 1,020.3 | 918.3 | 1,924 | $16.24 | $3,790.28 | $2,708.10 | $137,742.00 | $486,778.00 | $29,594.13 | $32,318.47 | $32,318.47 | 94.6% |
| 285 | 1972 | 4 | 30 | 140,295 | 1,670.2 | 1,937.2 | 1,743.5 | 1,924 | $16.24 | $3,790.28 | $5,141.85 | $261,522.00 | $0.00 | $7,866.33 | $13,024.42 | $13,024.42 | 11.7% |

| | A | B | C | D | E | F | G | H | I | J | K | L | M | N | O | P | Q |
|---|---|---|---|---|---|---|---|---|---|---|---|---|---|---|---|---|---|
| 1 | | | | | | | | | | Minimum | | | | | | | |
| 2 | | | | | | | | | | Monthly | Billing | | | | | | |
| 3 | | | | Metered | | | Billing | Ratchet | Customer | Demand | Demand | Incremental Energy | | Energy | | | Monthly |
| 4 | Period-of-Record | | | Energy | Demands | | Demand | Demand | Charge | Charge | Charge | Block 1 | Block 2 | Charge | Subtotal Bill | Total Bill | Load |
| 5 | YEAR | MO | DAYS | kWh | kWD | kVAD | kWD | kWD | $16.24 | $1.97 | $2.95 | $0.05607 | $0.04493 | kWh | | | Factor |
| 286 | 1972 | 5 | 31 | 0 | 0.0 | 0.0 | 0.0 | 1,924 | $16.24 | $3,790.28 | $0.00 | $0.00 | $0.00 | $0.00 | $16.24 | $3,790.28 | 0.0% |
| 287 | 1972 | 6 | 30 | 0 | 0.0 | 0.0 | 0.0 | 1,924 | $16.24 | $3,790.28 | $0.00 | $0.00 | $0.00 | $0.00 | $16.24 | $3,790.28 | 0.0% |
| 288 | 1972 | 7 | 31 | 0 | 0.0 | 0.0 | 0.0 | 1,924 | $16.24 | $3,790.28 | $0.00 | $0.00 | $0.00 | $0.00 | $16.24 | $3,790.28 | 0.0% |
| 289 | 1972 | 8 | 31 | 0 | 0.0 | 0.0 | 0.0 | 1,924 | $16.24 | $3,790.28 | $0.00 | $0.00 | $0.00 | $0.00 | $16.24 | $3,790.28 | 0.0% |
| 290 | 1972 | 9 | 30 | 0 | 0.0 | 0.0 | 0.0 | 1,924 | $16.24 | $3,790.28 | $0.00 | $0.00 | $0.00 | $0.00 | $16.24 | $3,790.28 | 0.0% |
| 291 | 1972 | 10 | 31 | 0 | 0.0 | 0.0 | 0.0 | 1,924 | $16.24 | $3,790.28 | $0.00 | $0.00 | $0.00 | $0.00 | $16.24 | $3,790.28 | 0.0% |
| 292 | 1972 | 11 | 30 | 1,144,674 | 1,713.9 | 1,980.4 | 1,782.4 | 1,924 | $16.24 | $3,790.28 | $5,256.90 | $267,358.00 | $877,316.00 | $54,408.57 | $59,681.71 | $59,681.71 | 92.8% |
| 293 | 1972 | 12 | 31 | 1,138,064 | 1,950.6 | 2,208.3 | 1,987.4 | 1,987 | $16.24 | $3,914.39 | $5,861.65 | $298,116.00 | $839,948.00 | $54,454.23 | $60,332.12 | $60,332.12 | 78.4% |
| 294 | 1973 | 1 | 31 | 956,333 | 1,948.2 | 2,205.9 | 1,985.4 | 1,987 | $16.24 | $3,914.39 | $5,855.75 | $297,803.00 | $658,530.00 | $46,285.57 | $52,157.56 | $52,157.56 | 66.0% |
| 295 | 1973 | 2 | 28 | 1,017,930 | 1,719.8 | 1,986.2 | 1,787.6 | 1,987 | $16.24 | $3,914.39 | $5,274.60 | $268,134.00 | $749,796.00 | $48,722.61 | $54,013.45 | $54,013.45 | 88.1% |
| 296 | 1973 | 3 | 31 | 1,290,935 | 2,163.8 | 2,412.7 | 2,171.4 | 2,171 | $16.24 | $4,276.87 | $6,404.45 | $325,709.00 | $965,226.00 | $61,630.11 | $68,050.80 | $68,050.80 | 80.2% |
| 297 | 1973 | 4 | 30 | 1,353,279 | 2,035.3 | 2,287.2 | 2,058.5 | 2,171 | $16.24 | $4,276.87 | $6,074.05 | $308,778.00 | $1,044,501.00 | $64,242.61 | $70,332.90 | $70,332.90 | 92.3% |
| 298 | 1973 | 5 | 31 | 1,312,473 | 1,929.8 | 2,188.7 | 1,969.8 | 2,171 | $16.24 | $4,276.87 | $5,811.50 | $295,470.00 | $1,017,003.00 | $62,260.95 | $68,088.69 | $68,088.69 | 91.4% |
| 299 | 1973 | 6 | 30 | 1,179,414 | 1,947.8 | 2,205.6 | 1,985.1 | 2,171 | $16.24 | $4,276.87 | $5,855.75 | $297,758.00 | $881,656.00 | $56,308.10 | $62,180.09 | $62,180.09 | 84.1% |
| 300 | 1973 | 7 | 31 | 65,653 | 924.5 | 1,055.9 | 950.3 | 2,171 | $16.24 | $4,276.87 | $2,802.50 | $142,546.00 | $0.00 | $3,681.14 | $6,499.88 | $6,499.88 | 9.5% |
| 301 | 1973 | 8 | 31 | 0 | 0.0 | 0.0 | 0.0 | 2,171 | $16.24 | $4,276.87 | $0.00 | $0.00 | $0.00 | $0.00 | $16.24 | $4,276.87 | 0.0% |
| 302 | 1973 | 9 | 30 | 0 | 0.0 | 0.0 | 0.0 | 2,171 | $16.24 | $4,276.87 | $0.00 | $0.00 | $0.00 | $0.00 | $16.24 | $4,276.87 | 0.0% |
| 303 | 1973 | 10 | 31 | 522,809 | 2,090.8 | 2,338.5 | 2,104.6 | 2,171 | $16.24 | $4,276.87 | $6,209.75 | $315,697.00 | $207,112.00 | $27,006.67 | $33,232.66 | $33,232.66 | 33.6% |
| 304 | 1973 | 11 | 30 | 754,242 | 2,089.3 | 2,337.0 | 2,103.3 | 2,171 | $16.24 | $4,276.87 | $6,203.85 | $315,496.00 | $438,746.00 | $37,402.72 | $43,622.81 | $43,622.81 | 50.1% |
| 305 | 1973 | 12 | 31 | 1,305,763 | 2,013.1 | 2,266.7 | 2,040.0 | 2,171 | $16.24 | $4,276.87 | $6,018.00 | $306,003.00 | $999,760.00 | $62,076.81 | $68,111.05 | $68,111.05 | 87.2% |
| 306 | 1974 | 1 | 31 | 1,217,013 | 1,894.0 | 2,154.7 | 1,939.3 | 2,171 | $16.24 | $4,276.87 | $5,720.05 | $290,890.00 | $926,123.00 | $57,920.91 | $63,657.20 | $63,657.20 | 86.4% |
| 307 | 1974 | 2 | 28 | 732,992 | 1,811.2 | 2,075.3 | 1,867.8 | 2,171 | $16.24 | $4,276.87 | $5,510.60 | $280,171.00 | $452,821.00 | $36,054.44 | $41,581.28 | $41,581.28 | 60.2% |
| 308 | 1974 | 3 | 31 | 1,142,589 | 2,256.5 | 2,506.0 | 2,255.4 | 2,255 | $16.24 | $4,442.35 | $6,652.25 | $338,313.00 | $804,276.00 | $55,105.33 | $61,773.82 | $61,773.82 | 68.1% |
| 309 | 1974 | 4 | 30 | 993,390 | 2,206.7 | 2,456.0 | 2,210.4 | 2,255 | $16.24 | $4,442.35 | $6,519.50 | $331,556.00 | $661,834.00 | $48,326.55 | $54,862.29 | $54,862.29 | 62.5% |
| 310 | 1974 | 5 | 31 | 1,273,289 | 1,817.8 | 2,081.7 | 1,873.5 | 2,255 | $16.24 | $4,442.35 | $5,525.35 | $281,023.00 | $992,266.00 | $60,339.47 | $65,881.06 | $65,881.06 | 94.1% |
| 311 | 1974 | 6 | 30 | 1,291,828 | 1,918.8 | 2,178.2 | 1,960.4 | 2,255 | $16.24 | $4,442.35 | $5,782.00 | $294,057.00 | $997,771.00 | $61,317.63 | $67,115.87 | $67,115.87 | 93.5% |
| 312 | 1974 | 7 | 31 | 621,899 | 1,953.1 | 2,210.6 | 1,989.5 | 2,255 | $16.24 | $4,442.35 | $5,870.50 | $298,429.00 | $323,470.00 | $31,266.42 | $37,153.16 | $37,153.16 | 42.8% |
| 313 | 1974 | 8 | 31 | 377,559 | 1,827.8 | 2,091.3 | 1,882.2 | 2,255 | $16.24 | $4,442.35 | $5,551.90 | $282,327.00 | $95,232.00 | $20,108.85 | $25,676.99 | $25,676.99 | 27.8% |
| 314 | 1974 | 9 | 30 | 729,269 | 1,961.2 | 2,218.2 | 1,996.4 | 2,255 | $16.24 | $4,442.35 | $5,888.20 | $299,456.00 | $429,813.00 | $36,102.00 | $42,006.44 | $42,006.44 | 51.6% |
| 315 | 1974 | 10 | 31 | 141,915 | 880.9 | 1,013.7 | 912.3 | 2,255 | $16.24 | $4,442.35 | $2,690.40 | $136,849.00 | $5,066.00 | $7,900.74 | $10,607.38 | $10,607.38 | 21.7% |
| 316 | 1974 | 11 | 30 | 1,360,712 | 2,009.6 | 2,263.4 | 2,037.1 | 2,255 | $16.24 | $4,442.35 | $6,009.15 | $305,564.00 | $1,055,148.00 | $64,540.77 | $70,566.16 | $70,566.16 | 94.0% |
| 317 | 1974 | 12 | 31 | 1,073,458 | 2,048.0 | 2,299.0 | 2,069.1 | 2,255 | $16.24 | $4,442.35 | $6,103.55 | $310,360.00 | $763,098.00 | $51,687.88 | $57,807.67 | $57,807.67 | 70.5% |
| 318 | 1975 | 1 | 31 | 1,044,885 | 1,719.8 | 1,986.2 | 1,787.6 | 2,255 | $16.24 | $4,442.35 | $5,274.60 | $268,134.00 | $776,751.00 | $49,933.70 | $55,224.54 | $55,224.54 | 81.7% |
| 319 | 1975 | 2 | 28 | 1,084,119 | 2,050.3 | 2,301.2 | 2,071.1 | 2,255 | $16.24 | $4,442.35 | $6,109.45 | $310,658.00 | $773,461.00 | $52,170.20 | $58,295.89 | $58,295.89 | 78.7% |
| 320 | 1975 | 3 | 31 | 1,162,975 | 2,152.5 | 2,401.1 | 2,161.0 | 2,210 | $16.24 | $4,353.70 | $6,374.95 | $324,155.00 | $838,820.00 | $55,863.55 | $62,254.74 | $62,254.74 | 72.6% |
| 321 | 1975 | 4 | 30 | 1,072,554 | 1,770.2 | 2,035.5 | 1,832.0 | 2,161 | $16.24 | $4,257.17 | $5,404.40 | $274,793.00 | $797,761.00 | $51,251.05 | $56,671.69 | $56,671.69 | 84.2% |
| 322 | 1975 | 5 | 31 | 1,249,637 | 1,985.4 | 2,240.9 | 2,016.8 | 2,161 | $16.24 | $4,257.17 | $5,950.15 | $302,521.00 | $947,116.00 | $59,516.27 | $65,482.66 | $65,482.66 | 84.6% |
| 323 | 1975 | 6 | 30 | 1,146,394 | 2,098.8 | 2,346.7 | 2,112.0 | 2,161 | $16.24 | $4,257.17 | $6,230.40 | $316,805.00 | $829,589.00 | $55,036.69 | $61,283.33 | $61,283.33 | 75.9% |
| 324 | 1975 | 7 | 31 | 244,287 | 1,752.1 | 2,017.9 | 1,816.1 | 2,161 | $16.24 | $4,257.17 | $5,357.20 | $272,412.00 | $0.00 | $13,697.18 | $19,070.62 | $19,070.62 | 18.7% |
| 325 | 1975 | 8 | 31 | 371,755 | 1,759.7 | 2,025.3 | 1,822.7 | 2,161 | $16.24 | $4,257.17 | $5,377.85 | $273,410.00 | $98,345.00 | $19,748.74 | $25,142.83 | $25,142.83 | 28.4% |
| 326 | 1975 | 9 | 30 | 40,084 | 1,670.2 | 1,937.2 | 1,743.5 | 2,161 | $16.24 | $4,257.17 | $5,141.85 | $261,522.00 | $0.00 | $2,247.52 | $7,405.61 | $7,405.61 | 3.3% |
| 327 | 1975 | 10 | 31 | 0 | 0.0 | 0.0 | 0.0 | 2,161 | $16.24 | $4,257.17 | $0.00 | $0.00 | $0.00 | $0.00 | $16.24 | $4,257.17 | 0.0% |
| 328 | 1975 | 11 | 30 | 104,056 | 909.5 | 1,041.5 | 937.3 | 2,161 | $16.24 | $4,257.17 | $2,764.15 | $140,597.00 | $0.00 | $5,834.44 | $8,614.83 | $8,614.83 | 15.9% |
| 329 | 1975 | 12 | 31 | 0 | 0.0 | 0.0 | 0.0 | 2,161 | $16.24 | $4,257.17 | $0.00 | $0.00 | $0.00 | $0.00 | $16.24 | $4,257.17 | 0.0% |
| 330 | 1976 | 1 | 31 | 349,343 | 1,805.1 | 2,069.4 | 1,862.5 | 2,161 | $16.24 | $4,257.17 | $5,492.90 | $279,374.00 | $69,969.00 | $18,808.21 | $24,317.35 | $24,317.35 | 26.0% |
| 331 | 1976 | 2 | 29 | 604,292 | 1,670.2 | 1,937.2 | 1,743.5 | 2,161 | $16.24 | $4,257.17 | $5,141.85 | $261,522.00 | $342,770.00 | $30,064.19 | $35,222.28 | $35,222.28 | 52.0% |
| 332 | 1976 | 3 | 31 | 729,254 | 1,748.9 | 2,014.8 | 1,813.3 | 2,112 | $16.24 | $4,160.64 | $5,348.35 | $271,998.00 | $457,256.00 | $35,795.44 | $41,160.03 | $41,160.03 | 56.0% |
| 333 | 1976 | 4 | 30 | 813,249 | 2,025.3 | 2,278.0 | 2,050.2 | 2,112 | $16.24 | $4,160.64 | $6,047.50 | $307,534.00 | $505,715.00 | $39,965.21 | $46,028.95 | $46,028.95 | 55.8% |
| 334 | 1976 | 5 | 31 | 1,182,595 | 1,900.9 | 2,161.2 | 1,945.1 | 2,112 | $16.24 | $4,160.64 | $5,737.75 | $291,766.00 | $890,829.00 | $56,384.27 | $62,138.26 | $62,138.26 | 83.6% |
| 335 | 1976 | 6 | 30 | 610,917 | 1,847.3 | 2,110.1 | 1,899.1 | 2,050 | $16.24 | $4,038.50 | $5,602.05 | $284,867.00 | $326,050.00 | $30,621.92 | $36,240.21 | $36,240.21 | 45.9% |
| 336 | 1976 | 7 | 31 | 715,991 | 2,048.0 | 2,299.0 | 2,069.1 | 2,069 | $16.24 | $4,075.93 | $6,103.55 | $310,360.00 | $405,631.00 | $35,626.89 | $41,746.68 | $41,746.68 | 47.0% |
| 337 | 1976 | 8 | 31 | 61,799 | 897.1 | 1,029.4 | 926.5 | 2,069 | $16.24 | $4,075.93 | $2,731.70 | $138,974.00 | $0.00 | $3,465.07 | $6,213.01 | $6,213.01 | 9.3% |
| 338 | 1976 | 9 | 30 | 0 | 0.0 | 0.0 | 0.0 | 2,069 | $16.24 | $4,075.93 | $0.00 | $0.00 | $0.00 | $0.00 | $16.24 | $4,075.93 | 0.0% |
| 339 | 1976 | 10 | 31 | 100,211 | 835.1 | 968.6 | 871.7 | 2,069 | $16.24 | $4,075.93 | $2,572.40 | $130,761.00 | $0.00 | $5,618.81 | $8,207.45 | $8,207.45 | 16.1% |
| 340 | 1976 | 11 | 30 | 222,359 | 895.4 | 1,027.7 | 925.0 | 2,069 | $16.24 | $4,075.93 | $2,728.75 | $138,745.00 | $83,614.00 | $11,536.21 | $14,281.20 | $14,281.20 | 34.5% |
| 341 | 1976 | 12 | 31 | 0 | 0.0 | 0.0 | 0.0 | 2,069 | $16.24 | $4,075.93 | $0.00 | $0.00 | $0.00 | $0.00 | $16.24 | $4,075.93 | 0.0% |

Little Bayou Meto
Flood Control Pumping Plant
1000-cfs (2 1750-hp)



| | A | B | C | D | E | F | G | H | I | J | K | L | M | N | O | P | Q |
|---|---|---|---|---|---|---|---|---|---|---|---|---|---|---|---|---|---|
| 1 | | | | | | | | | | Minimum | | | | | | | |
| 2 | | | | | | | | | | Monthly | Billing | | | | | | |
| 3 | | | | Metered | | | Billing | Ratchet | Customer | Demand | Demand | Incremental Energy | | Energy | | | Monthly |
| 4 | Period-of-Record | | | Energy | Demands | | Demand | Demand | Charge | Charge | Charge | Block 1 | Block 2 | Charge | Subtotal Bill | Total Bill | Load |
| 5 | YEAR | MO | DAYS | kWh | kWD | kVAD | kWD | kWD | $16.24 | $1.97 | $2.95 | $0.05607 | $0.04493 | kWh | | | Factor |
| 342 | 1977 | 1 | 31 | 260,596 | 837.1 | 970.6 | 873.6 | 2,069 | $16.24 | $4,075.93 | $2,578.30 | $131,033.00 | $129,563.00 | $13,168.29 | $15,762.83 | $15,762.83 | 41.8% |
| 343 | 1977 | 2 | 28 | 41,918 | 890.8 | 1,023.3 | 921.0 | 2,069 | $16.24 | $4,075.93 | $2,716.95 | $138,144.00 | $0.00 | $2,350.36 | $5,083.55 | $5,083.55 | 7.0% |
| 344 | 1977 | 3 | 31 | 916,862 | 2,138.9 | 2,387.4 | 2,148.7 | 2,149 | $16.24 | $4,233.53 | $6,339.55 | $322,300.00 | $594,562.00 | $44,785.03 | $51,140.82 | $51,140.82 | 57.6% |
| 345 | 1977 | 4 | 30 | 924,784 | 2,050.0 | 2,300.9 | 2,070.8 | 2,149 | $16.24 | $4,233.53 | $6,109.45 | $310,616.00 | $614,168.00 | $45,010.81 | $51,136.50 | $51,136.50 | 62.7% |
| 346 | 1977 | 5 | 31 | 262,723 | 889.7 | 1,022.2 | 920.0 | 2,149 | $16.24 | $4,233.53 | $2,714.00 | $138,000.00 | $124,723.00 | $13,341.46 | $16,071.70 | $16,071.70 | 39.7% |
| 347 | 1977 | 6 | 30 | 120,961 | 864.6 | 997.7 | 898.0 | 2,149 | $16.24 | $4,233.53 | $2,649.10 | $134,693.00 | $0.00 | $6,782.28 | $9,447.62 | $9,447.62 | 19.4% |
| 348 | 1977 | 7 | 31 | 561,262 | 2,008.6 | 2,262.5 | 2,036.2 | 2,149 | $16.24 | $4,233.53 | $6,006.20 | $305,432.00 | $255,830.00 | $28,620.01 | $34,642.45 | $34,642.45 | 37.6% |
| 349 | 1977 | 8 | 31 | 255,319 | 1,856.4 | 2,118.8 | 1,906.9 | 2,149 | $16.24 | $4,233.53 | $5,625.65 | $286,040.00 | $0.00 | $14,315.73 | $19,957.62 | $19,957.62 | 18.5% |
| 350 | 1977 | 9 | 30 | 581,876 | 1,878.2 | 2,139.7 | 1,925.7 | 2,149 | $16.24 | $4,233.53 | $5,681.70 | $288,857.00 | $293,019.00 | $29,361.56 | $35,059.50 | $35,059.50 | 43.0% |
| 351 | 1977 | 10 | 31 | 442,785 | 1,929.0 | 2,187.9 | 1,969.1 | 2,149 | $16.24 | $4,233.53 | $5,808.55 | $295,361.00 | $147,424.00 | $23,184.65 | $29,009.44 | $29,009.44 | 30.9% |
| 352 | 1977 | 11 | 30 | 910,146 | 1,880.0 | 2,141.3 | 1,927.2 | 2,149 | $16.24 | $4,233.53 | $5,684.65 | $289,077.00 | $621,069.00 | $44,113.18 | $49,814.07 | $49,814.07 | 67.2% |
| 353 | 1977 | 12 | 31 | 820,360 | 1,837.8 | 2,100.9 | 1,890.8 | 2,149 | $16.24 | $4,233.53 | $5,578.45 | $283,627.00 | $536,733.00 | $40,018.38 | $45,613.07 | $45,613.07 | 60.0% |
| 354 | 1978 | 1 | 31 | 120,253 | 1,670.2 | 1,937.2 | 1,743.5 | 2,149 | $16.24 | $4,233.53 | $5,141.85 | $261,522.00 | $0.00 | $6,742.57 | $11,900.66 | $11,900.66 | 9.7% |
| 355 | 1978 | 2 | 28 | 531,851 | 1,919.6 | 2,179.0 | 1,961.1 | 2,149 | $16.24 | $4,233.53 | $5,784.95 | $294,166.00 | $237,685.00 | $27,173.07 | $32,974.26 | $32,974.26 | 41.2% |
| 356 | 1978 | 3 | 31 | 894,720 | 2,005.1 | 2,259.2 | 2,033.3 | 2,071 | $16.24 | $4,079.87 | $5,997.35 | $304,992.00 | $589,728.00 | $43,597.38 | $49,610.97 | $49,610.97 | 60.0% |
| 357 | 1978 | 4 | 30 | 666,231 | 2,035.6 | 2,287.6 | 2,058.8 | 2,059 | $16.24 | $4,056.23 | $6,074.05 | $308,821.00 | $357,410.00 | $33,374.02 | $39,464.31 | $39,464.31 | 45.5% |
| 358 | 1978 | 5 | 31 | 1,275,405 | 1,890.6 | 2,151.5 | 1,936.3 | 2,059 | $16.24 | $4,056.23 | $5,711.20 | $290,451.00 | $984,954.00 | $60,539.57 | $66,267.01 | $66,267.01 | 90.7% |
| 359 | 1978 | 6 | 30 | 1,107,579 | 1,870.5 | 2,132.3 | 1,919.1 | 2,059 | $16.24 | $4,056.23 | $5,661.05 | $287,865.00 | $819,714.00 | $52,970.34 | $58,647.63 | $58,647.63 | 82.2% |
| 360 | 1978 | 7 | 31 | 145,466 | 1,858.1 | 2,120.5 | 1,908.4 | 2,059 | $16.24 | $4,056.23 | $5,628.60 | $286,262.00 | $0.00 | $8,156.29 | $13,801.13 | $13,801.13 | 10.5% |
| 361 | 1978 | 8 | 31 | 0 | 0.0 | 0.0 | 0.0 | 2,059 | $16.24 | $4,056.23 | $0.00 | $0.00 | $0.00 | $0.00 | $16.24 | $4,056.23 | 0.0% |
| 362 | 1978 | 9 | 30 | 0 | 0.0 | 0.0 | 0.0 | 2,059 | $16.24 | $4,056.23 | $0.00 | $0.00 | $0.00 | $0.00 | $16.24 | $4,056.23 | 0.0% |
| 363 | 1978 | 10 | 31 | 0 | 0.0 | 0.0 | 0.0 | 2,059 | $16.24 | $4,056.23 | $0.00 | $0.00 | $0.00 | $0.00 | $16.24 | $4,056.23 | 0.0% |
| 364 | 1978 | 11 | 30 | 0 | 0.0 | 0.0 | 0.0 | 2,059 | $16.24 | $4,056.23 | $0.00 | $0.00 | $0.00 | $0.00 | $16.24 | $4,056.23 | 0.0% |
| 365 | 1978 | 12 | 31 | 721,830 | 1,683.3 | 1,950.2 | 1,755.2 | 2,059 | $16.24 | $4,056.23 | $5,177.25 | $263,274.00 | $458,556.00 | $35,364.69 | $40,558.18 | $40,558.18 | 57.6% |
| 366 | 1979 | 1 | 31 | 1,153,311 | 1,857.7 | 2,120.0 | 1,908.0 | 2,059 | $16.24 | $4,056.23 | $5,628.60 | $286,207.00 | $867,104.00 | $55,006.61 | $60,651.45 | $60,651.45 | 83.4% |
| 367 | 1979 | 2 | 28 | 282,180 | 1,720.7 | 1,987.1 | 1,788.4 | 2,059 | $16.24 | $4,056.23 | $5,274.60 | $268,254.00 | $13,926.00 | $15,666.70 | $20,957.54 | $20,957.54 | 24.4% |
| 368 | 1979 | 3 | 31 | 1,039,310 | 2,013.1 | 2,266.7 | 2,040.0 | 2,059 | $16.24 | $4,056.23 | $6,018.00 | $306,003.00 | $733,307.00 | $50,105.07 | $56,139.31 | $56,139.31 | 69.4% |
| 369 | 1979 | 4 | 30 | 1,235,185 | 2,022.9 | 2,275.8 | 2,048.2 | 2,048 | $16.24 | $4,034.56 | $6,041.60 | $307,231.00 | $927,954.00 | $58,919.42 | $64,977.26 | $64,977.26 | 84.8% |
| 370 | 1979 | 5 | 31 | 1,292,786 | 1,847.3 | 2,110.1 | 1,899.1 | 2,048 | $16.24 | $4,034.56 | $5,602.05 | $284,867.00 | $1,007,919.00 | $61,258.29 | $66,876.58 | $66,876.58 | 94.1% |
| 371 | 1979 | 6 | 30 | 1,155,375 | 1,867.5 | 2,129.5 | 1,916.5 | 2,048 | $16.24 | $4,034.56 | $5,655.15 | $287,479.00 | $867,896.00 | $55,113.51 | $60,784.90 | $60,784.90 | 85.9% |
| 372 | 1979 | 7 | 31 | 170,296 | 1,865.4 | 2,127.4 | 1,914.7 | 2,048 | $16.24 | $4,034.56 | $5,649.25 | $287,202.00 | $0.00 | $9,548.49 | $15,213.98 | $15,213.98 | 12.3% |
| 373 | 1979 | 8 | 31 | 289,361 | 1,962.3 | 2,219.2 | 1,997.3 | 2,048 | $16.24 | $4,034.56 | $5,891.15 | $299,589.00 | $0.00 | $16,224.45 | $22,131.84 | $22,131.84 | 19.8% |
| 374 | 1979 | 9 | 30 | 0 | 0.0 | 0.0 | 0.0 | 2,048 | $16.24 | $4,034.56 | $0.00 | $0.00 | $0.00 | $0.00 | $16.24 | $4,034.56 | 0.0% |
| 375 | 1979 | 10 | 31 | 0 | 0.0 | 0.0 | 0.0 | 2,048 | $16.24 | $4,034.56 | $0.00 | $0.00 | $0.00 | $0.00 | $16.24 | $4,034.56 | 0.0% |
| 376 | 1979 | 11 | 30 | 200,735 | 1,683.3 | 1,950.2 | 1,755.2 | 2,048 | $16.24 | $4,034.56 | $5,177.25 | $263,274.00 | $0.00 | $11,255.23 | $16,448.72 | $16,448.72 | 16.6% |
| 377 | 1979 | 12 | 31 | 1,010,081 | 1,900.4 | 2,160.8 | 1,944.7 | 2,048 | $16.24 | $4,034.56 | $5,737.75 | $291,711.00 | $718,370.00 | $48,632.60 | $54,386.59 | $54,386.59 | 71.4% |
| 378 | 1980 | 1 | 31 | 726,907 | 1,824.3 | 2,088.0 | 1,879.2 | 2,048 | $16.24 | $4,034.56 | $5,543.05 | $281,874.00 | $445,033.00 | $35,800.01 | $41,359.30 | $41,359.30 | 53.6% |
| 379 | 1980 | 2 | 29 | 481,806 | 865.0 | 998.2 | 898.4 | 2,048 | $16.24 | $4,034.56 | $2,649.10 | $134,753.00 | $347,053.00 | $23,148.69 | $25,814.03 | $25,814.03 | 80.0% |
| 380 | 1980 | 3 | 31 | 440,926 | 1,670.2 | 1,937.2 | 1,743.5 | 2,048 | $16.24 | $4,034.56 | $5,141.85 | $261,522.00 | $179,404.00 | $22,724.16 | $27,882.25 | $27,882.25 | 35.5% |
| 381 | 1980 | 4 | 30 | 1,214,561 | 1,833.0 | 2,096.3 | 1,886.7 | 1,997 | $16.24 | $3,934.09 | $5,566.65 | $283,006.00 | $931,555.00 | $57,722.91 | $63,305.80 | $63,305.80 | 92.0% |
| 382 | 1980 | 5 | 31 | 853,938 | 1,778.5 | 2,043.6 | 1,839.2 | 1,997 | $16.24 | $3,934.09 | $5,425.05 | $275,885.00 | $578,053.00 | $41,440.79 | $46,882.08 | $46,882.08 | 64.5% |
| 383 | 1980 | 6 | 30 | 102,645 | 1,709.4 | 1,976.0 | 1,778.4 | 1,997 | $16.24 | $3,934.09 | $5,245.10 | $266,760.00 | $0.00 | $5,755.33 | $11,016.67 | $11,016.67 | 8.3% |
| 384 | 1980 | 7 | 31 | 0 | 0.0 | 0.0 | 0.0 | 1,997 | $16.24 | $3,934.09 | $0.00 | $0.00 | $0.00 | $0.00 | $16.24 | $3,934.09 | 0.0% |
| 385 | 1980 | 8 | 31 | 0 | 0.0 | 0.0 | 0.0 | 1,945 | $16.24 | $3,831.65 | $0.00 | $0.00 | $0.00 | $0.00 | $16.24 | $3,831.65 | 0.0% |
| 386 | 1980 | 9 | 30 | 0 | 0.0 | 0.0 | 0.0 | 1,945 | $16.24 | $3,831.65 | $0.00 | $0.00 | $0.00 | $0.00 | $16.24 | $3,831.65 | 0.0% |
| 387 | 1980 | 10 | 31 | 0 | 0.0 | 0.0 | 0.0 | 1,945 | $16.24 | $3,831.65 | $0.00 | $0.00 | $0.00 | $0.00 | $16.24 | $3,831.65 | 0.0% |
| 388 | 1980 | 11 | 30 | 0 | 0.0 | 0.0 | 0.0 | 1,945 | $16.24 | $3,831.65 | $0.00 | $0.00 | $0.00 | $0.00 | $16.24 | $3,831.65 | 0.0% |
| 389 | 1980 | 12 | 31 | 0 | 0.0 | 0.0 | 0.0 | 1,887 | $16.24 | $3,717.39 | $0.00 | $0.00 | $0.00 | $0.00 | $16.24 | $3,717.39 | 0.0% |
| 390 | 1981 | 1 | 31 | 0 | 0.0 | 0.0 | 0.0 | 1,887 | $16.24 | $3,717.39 | $0.00 | $0.00 | $0.00 | $0.00 | $16.24 | $3,717.39 | 0.0% |
| 391 | 1981 | 2 | 28 | 0 | 0.0 | 0.0 | 0.0 | 1,887 | $16.24 | $3,717.39 | $0.00 | $0.00 | $0.00 | $0.00 | $16.24 | $3,717.39 | 0.0% |
| 392 | 1981 | 3 | 31 | 0 | 0.0 | 0.0 | 0.0 | 1,887 | $16.24 | $3,717.39 | $0.00 | $0.00 | $0.00 | $0.00 | $16.24 | $3,717.39 | 0.0% |
| 393 | 1981 | 4 | 30 | 0 | 0.0 | 0.0 | 0.0 | 1,839 | $16.24 | $3,622.83 | $0.00 | $0.00 | $0.00 | $0.00 | $16.24 | $3,622.83 | 0.0% |
| 394 | 1981 | 5 | 31 | 300,632 | 1,670.2 | 1,937.2 | 1,743.5 | 1,778 | $16.24 | $3,502.66 | $5,141.85 | $261,522.00 | $39,110.00 | $16,420.75 | $21,578.84 | $21,578.84 | 24.2% |
| 395 | 1981 | 6 | 30 | 846,254 | 1,803.8 | 2,068.2 | 1,861.4 | 1,861 | $16.24 | $3,666.17 | $5,489.95 | $279,203.00 | $567,051.00 | $41,132.51 | $46,638.70 | $46,638.70 | 65.2% |
| 396 | 1981 | 7 | 31 | 0 | 0.0 | 0.0 | 0.0 | 1,861 | $16.24 | $3,666.17 | $0.00 | $0.00 | $0.00 | $0.00 | $16.24 | $3,666.17 | 0.0% |
| 397 | 1981 | 8 | 31 | 0 | 0.0 | 0.0 | 0.0 | 1,861 | $16.24 | $3,666.17 | $0.00 | $0.00 | $0.00 | $0.00 | $16.24 | $3,666.17 | 0.0% |

Little Bayou Meto
Flood Control Pumping Plant
1000-cfs (2 1750-hp)



| | A | B | C | D | E | F | G | H | I | J | K | L | M | N | O | P | Q |
|---|---|---|---|---|---|---|---|---|---|---|---|---|---|---|---|---|---|
| 1 | | | | | | | | | | Minimum | | | | | | | |
| 2 | | | | | | | | | | Monthly | Billing | | | | | | |
| 3 | | | | Metered | | | Billing | Ratchet | Customer | Demand | Demand | Incremental Energy | | Energy | | | Monthly |
| 4 | Period-of-Record | | | Energy | Demands | | Demand | Demand | Charge | Charge | Charge | Block 1 | Block 2 | Charge | Subtotal Bill | Total Bill | Load |
| 5 | YEAR | MO | DAYS | kWh | kWD | kVAD | kWD | kWD | $16.24 | $1.97 | $2.95 | $0.05607 | $0.04493 | kWh | | | Factor |
| 398 | 1981 | 9 | 30 | 0 | 0.0 | 0.0 | 0.0 | 1,861 | $16.24 | $3,666.17 | $0.00 | $0.00 | $0.00 | $0.00 | $16.24 | $3,666.17 | 0.0% |
| 399 | 1981 | 10 | 31 | 335,622 | 1,808.6 | 2,072.8 | 1,865.5 | 1,866 | $16.24 | $3,676.02 | $5,504.70 | $279,830.00 | $55,792.00 | $18,196.80 | $23,717.74 | $23,717.74 | 24.9% |
| 400 | 1981 | 11 | 30 | 330,484 | 1,834.7 | 2,098.0 | 1,888.2 | 1,888 | $16.24 | $3,719.36 | $5,569.60 | $283,232.00 | $47,252.00 | $18,003.85 | $23,589.69 | $23,589.69 | 25.0% |
| 401 | 1981 | 12 | 31 | 0 | 0.0 | 0.0 | 0.0 | 1,888 | $16.24 | $3,719.36 | $0.00 | $0.00 | $0.00 | $0.00 | $16.24 | $3,719.36 | 0.0% |
| 402 | 1982 | 1 | 31 | 243,823 | 887.3 | 1,019.9 | 917.9 | 1,888 | $16.24 | $3,719.36 | $2,708.10 | $137,684.00 | $106,139.00 | $12,488.77 | $15,213.11 | $15,213.11 | 36.9% |
| 403 | 1982 | 2 | 28 | 1,114,884 | 2,010.3 | 2,264.1 | 2,037.7 | 2,038 | $16.24 | $4,014.86 | $6,012.10 | $305,652.00 | $809,232.00 | $53,496.70 | $59,525.04 | $59,525.04 | 82.5% |
| 404 | 1982 | 3 | 31 | 950,356 | 1,989.6 | 2,244.8 | 2,020.3 | 2,038 | $16.24 | $4,014.86 | $5,959.00 | $303,051.00 | $647,305.00 | $46,075.48 | $52,050.72 | $52,050.72 | 64.2% |
| 405 | 1982 | 4 | 30 | 1,097,364 | 1,823.0 | 2,086.7 | 1,878.0 | 2,038 | $16.24 | $4,014.86 | $5,540.10 | $281,704.00 | $815,660.00 | $52,442.75 | $57,999.09 | $57,999.09 | 83.6% |
| 406 | 1982 | 5 | 31 | 1,021,757 | 2,153.3 | 2,402.0 | 2,161.8 | 2,162 | $16.24 | $4,259.14 | $6,377.90 | $324,274.00 | $697,483.00 | $49,519.95 | $55,914.09 | $55,914.09 | 63.8% |
| 407 | 1982 | 6 | 30 | 1,354,791 | 1,937.9 | 2,196.3 | 1,976.7 | 2,162 | $16.24 | $4,259.14 | $5,832.15 | $296,499.00 | $1,058,292.00 | $64,173.76 | $70,022.15 | $70,022.15 | 97.1% |
| 408 | 1982 | 7 | 31 | 628,436 | 1,868.4 | 2,130.3 | 1,917.3 | 2,162 | $16.24 | $4,259.14 | $5,655.15 | $287,589.00 | $340,847.00 | $31,439.37 | $37,110.76 | $37,110.76 | 45.2% |
| 409 | 1982 | 8 | 31 | 370,731 | 1,670.2 | 1,937.2 | 1,743.5 | 2,162 | $16.24 | $4,259.14 | $5,141.85 | $261,522.00 | $109,209.00 | $19,570.30 | $24,728.39 | $24,728.39 | 29.8% |
| 410 | 1982 | 9 | 30 | 0 | 0.0 | 0.0 | 0.0 | 2,162 | $16.24 | $4,259.14 | $0.00 | $0.00 | $0.00 | $0.00 | $16.24 | $4,259.14 | 0.0% |
| 411 | 1982 | 10 | 31 | 0 | 0.0 | 0.0 | 0.0 | 2,162 | $16.24 | $4,259.14 | $0.00 | $0.00 | $0.00 | $0.00 | $16.24 | $4,259.14 | 0.0% |
| 412 | 1982 | 11 | 30 | 61,852 | 1,714.4 | 1,980.9 | 1,782.8 | 2,162 | $16.24 | $4,259.14 | $5,259.85 | $267,418.00 | $0.00 | $3,468.04 | $8,744.13 | $8,744.13 | 5.0% |
| 413 | 1982 | 12 | 31 | 1,334,749 | 2,220.0 | 2,469.3 | 2,222.4 | 2,222 | $16.24 | $4,377.34 | $6,554.90 | $333,358.00 | $1,001,391.00 | $63,683.88 | $70,255.02 | $70,255.02 | 80.8% |
| 414 | 1983 | 1 | 31 | 566,864 | 1,814.3 | 2,078.3 | 1,870.5 | 2,222 | $16.24 | $4,377.34 | $5,516.50 | $280,569.00 | $286,295.00 | $28,594.74 | $34,127.48 | $34,127.48 | 42.0% |
| 415 | 1983 | 2 | 28 | 871,160 | 1,967.2 | 2,223.8 | 2,001.4 | 2,222 | $16.24 | $4,377.34 | $5,902.95 | $300,213.00 | $570,947.00 | $42,485.59 | $48,404.78 | $48,404.78 | 65.9% |
| 416 | 1983 | 3 | 31 | 647,827 | 1,975.3 | 2,231.4 | 2,008.2 | 2,222 | $16.24 | $4,377.34 | $5,923.60 | $301,235.00 | $346,592.00 | $32,462.63 | $38,402.47 | $38,402.47 | 44.1% |
| 417 | 1983 | 4 | 30 | 1,156,644 | 1,961.5 | 2,218.5 | 1,996.7 | 2,222 | $16.24 | $4,377.34 | $5,891.15 | $299,500.00 | $857,144.00 | $55,304.44 | $61,211.83 | $61,211.83 | 81.9% |
| 418 | 1983 | 5 | 31 | 1,308,215 | 1,898.3 | 2,158.8 | 1,942.9 | 2,222 | $16.24 | $4,377.34 | $5,731.85 | $291,437.00 | $1,016,778.00 | $62,024.71 | $67,772.80 | $67,772.80 | 92.6% |
| 419 | 1983 | 6 | 30 | 664,018 | 1,861.1 | 2,123.3 | 1,911.0 | 2,222 | $16.24 | $4,377.34 | $5,637.45 | $286,649.00 | $377,369.00 | $33,027.60 | $38,681.29 | $38,681.29 | 49.6% |
| 420 | 1983 | 7 | 31 | 496,701 | 2,006.8 | 2,260.8 | 2,034.7 | 2,222 | $16.24 | $4,377.34 | $6,003.25 | $305,212.00 | $191,489.00 | $25,716.84 | $31,736.33 | $31,736.33 | 33.3% |
| 421 | 1983 | 8 | 31 | 311,852 | 1,848.7 | 2,111.4 | 1,900.2 | 2,222 | $16.24 | $4,377.34 | $5,605.00 | $285,036.00 | $26,816.00 | $17,186.81 | $22,808.05 | $22,808.05 | 22.7% |
| 422 | 1983 | 9 | 30 | 140,295 | 835.1 | 968.6 | 871.7 | 2,222 | $16.24 | $4,377.34 | $2,572.40 | $130,761.00 | $9,534.00 | $7,760.13 | $10,348.77 | $10,348.77 | 23.3% |
| 423 | 1983 | 10 | 31 | 479,631 | 1,821.7 | 2,085.4 | 1,876.9 | 2,222 | $16.24 | $4,377.34 | $5,537.15 | $281,534.00 | $198,097.00 | $24,686.11 | $30,239.50 | $30,239.50 | 35.4% |
| 424 | 1983 | 11 | 30 | 607,342 | 1,950.6 | 2,208.3 | 1,987.4 | 2,222 | $16.24 | $4,377.34 | $5,861.65 | $298,116.00 | $309,226.00 | $30,608.89 | $36,486.78 | $36,486.78 | 43.2% |
| 425 | 1983 | 12 | 31 | 1,243,662 | 1,685.1 | 1,952.0 | 1,756.8 | 2,035 | $16.24 | $4,008.95 | $5,183.15 | $263,515.00 | $980,147.00 | $58,813.29 | $64,012.68 | $64,012.68 | 99.2% |
| 426 | 1984 | 1 | 31 | 408,232 | 1,824.7 | 2,088.4 | 1,879.5 | 2,035 | $16.24 | $4,008.95 | $5,546.00 | $281,931.00 | $126,301.00 | $21,482.58 | $27,044.82 | $27,044.82 | 30.1% |
| 427 | 1984 | 2 | 29 | 671,395 | 1,785.0 | 2,050.0 | 1,845.0 | 2,035 | $16.24 | $4,008.95 | $5,442.75 | $276,746.00 | $394,649.00 | $33,248.73 | $38,707.72 | $38,707.72 | 54.0% |
| 428 | 1984 | 3 | 31 | 1,209,296 | 2,069.2 | 2,318.5 | 2,086.6 | 2,087 | $16.24 | $4,111.39 | $6,156.65 | $312,997.00 | $896,299.00 | $57,820.46 | $63,993.35 | $63,993.35 | 78.6% |
| 429 | 1984 | 4 | 30 | 1,390,419 | 2,211.4 | 2,460.7 | 2,214.6 | 2,215 | $16.24 | $4,363.55 | $6,534.25 | $332,190.00 | $1,058,229.00 | $66,172.12 | $72,722.61 | $72,722.61 | 87.3% |
| 430 | 1984 | 5 | 31 | 1,248,372 | 1,939.2 | 2,197.5 | 1,977.7 | 2,215 | $16.24 | $4,363.55 | $5,835.10 | $296,661.00 | $951,711.00 | $59,394.16 | $65,245.50 | $65,245.50 | 86.5% |
| 431 | 1984 | 6 | 30 | 539,179 | 1,963.7 | 2,220.5 | 1,998.4 | 2,215 | $16.24 | $4,363.55 | $5,894.10 | $299,767.00 | $239,412.00 | $27,564.72 | $33,475.06 | $33,475.06 | 38.1% |
| 432 | 1984 | 7 | 31 | 481,661 | 1,684.2 | 1,951.1 | 1,756.0 | 2,215 | $16.24 | $4,363.55 | $5,180.20 | $263,395.00 | $218,266.00 | $24,575.25 | $29,771.69 | $29,771.69 | 38.4% |
| 433 | 1984 | 8 | 31 | 0 | 0.0 | 0.0 | 0.0 | 2,215 | $16.24 | $4,363.55 | $0.00 | $0.00 | $0.00 | $0.00 | $16.24 | $4,363.55 | 0.0% |
| 434 | 1984 | 9 | 30 | 0 | 0.0 | 0.0 | 0.0 | 2,215 | $16.24 | $4,363.55 | $0.00 | $0.00 | $0.00 | $0.00 | $16.24 | $4,363.55 | 0.0% |
| 435 | 1984 | 10 | 31 | 860,276 | 1,919.6 | 2,179.0 | 1,961.1 | 2,215 | $16.24 | $4,363.55 | $5,784.95 | $294,166.00 | $566,110.00 | $41,929.21 | $47,730.40 | $47,730.40 | 60.2% |
| 436 | 1984 | 11 | 30 | 892,319 | 2,037.0 | 2,288.8 | 2,059.9 | 2,215 | $16.24 | $4,363.55 | $6,077.00 | $308,992.00 | $583,327.00 | $43,534.06 | $49,627.30 | $49,627.30 | 60.8% |
| 437 | 1984 | 12 | 31 | 1,278,673 | 2,095.2 | 2,343.0 | 2,108.7 | 2,215 | $16.24 | $4,363.55 | $6,221.55 | $316,301.00 | $962,372.00 | $60,974.37 | $67,212.16 | $67,212.16 | 82.0% |
| 438 | 1985 | 1 | 31 | 1,198,587 | 2,203.5 | 2,452.7 | 2,207.4 | 2,215 | $16.24 | $4,363.55 | $6,510.65 | $331,117.00 | $867,470.00 | $57,541.16 | $64,068.05 | $64,068.05 | 73.1% |
| 439 | 1985 | 2 | 28 | 1,042,225 | 2,180.4 | 2,429.5 | 2,186.5 | 2,215 | $16.24 | $4,363.55 | $6,451.65 | $327,976.00 | $714,249.00 | $50,480.82 | $56,948.71 | $56,948.71 | 71.1% |
| 440 | 1985 | 3 | 31 | 1,217,860 | 2,165.6 | 2,414.4 | 2,173.0 | 2,215 | $16.24 | $4,363.55 | $6,410.35 | $325,947.00 | $891,913.00 | $58,349.50 | $64,776.09 | $64,776.09 | 75.6% |
| 441 | 1985 | 4 | 30 | 1,372,891 | 2,083.5 | 2,331.7 | 2,098.5 | 2,207 | $16.24 | $4,347.79 | $6,189.10 | $314,774.00 | $1,058,117.00 | $65,190.57 | $71,395.91 | $71,395.91 | 91.5% |
| 442 | 1985 | 5 | 31 | 1,146,676 | 1,954.9 | 2,212.2 | 1,991.0 | 2,207 | $16.24 | $4,347.79 | $5,873.45 | $298,652.00 | $848,024.00 | $54,847.14 | $60,736.83 | $60,736.83 | 78.8% |
| 443 | 1985 | 6 | 30 | 762,679 | 2,020.8 | 2,273.8 | 2,046.5 | 2,207 | $16.24 | $4,347.79 | $6,035.70 | $306,968.00 | $455,711.00 | $37,686.79 | $43,738.73 | $43,738.73 | 52.4% |
| 444 | 1985 | 7 | 31 | 316,742 | 1,998.4 | 2,253.0 | 2,027.7 | 2,207 | $16.24 | $4,347.79 | $5,982.60 | $304,155.00 | $12,587.00 | $17,619.50 | $23,618.34 | $23,618.34 | 21.3% |
| 445 | 1985 | 8 | 31 | 63,366 | 909.8 | 1,041.7 | 937.5 | 2,207 | $16.24 | $4,347.79 | $2,767.10 | $140,625.00 | $0.00 | $3,552.95 | $6,336.29 | $6,336.29 | 9.4% |
| 446 | 1985 | 9 | 30 | 0 | 0.0 | 0.0 | 0.0 | 2,207 | $16.24 | $4,347.79 | $0.00 | $0.00 | $0.00 | $0.00 | $16.24 | $4,347.79 | 0.0% |
| 447 | 1985 | 10 | 31 | 565,134 | 2,073.9 | 2,322.9 | 2,090.6 | 2,207 | $16.24 | $4,347.79 | $6,168.45 | $313,590.00 | $251,544.00 | $28,884.86 | $35,069.55 | $35,069.55 | 36.6% |
| 448 | 1985 | 11 | 30 | 635,934 | 2,278.3 | 2,527.9 | 2,275.1 | 2,275 | $16.24 | $4,481.75 | $6,711.25 | $341,266.00 | $294,668.00 | $32,374.22 | $39,101.71 | $39,101.71 | 38.8% |
| 449 | 1985 | 12 | 31 | 1,249,578 | 2,241.5 | 2,490.9 | 2,241.8 | 2,275 | $16.24 | $4,481.75 | $6,613.90 | $336,275.00 | $913,303.00 | $59,889.64 | $66,519.78 | $66,519.78 | 74.9% |
| 450 | 1986 | 1 | 31 | 251,617 | 1,718.9 | 1,985.3 | 1,786.8 | 2,275 | $16.24 | $4,481.75 | $5,271.65 | $268,015.00 | $0.00 | $14,108.15 | $19,396.04 | $19,396.04 | 19.7% |
| 451 | 1986 | 2 | 28 | 730,387 | 1,824.3 | 2,088.0 | 1,879.2 | 2,275 | $16.24 | $4,481.75 | $5,543.05 | $281,874.00 | $448,513.00 | $35,956.36 | $41,515.65 | $41,515.65 | 59.6% |
| 452 | 1986 | 3 | 31 | 411,030 | 1,869.3 | 2,131.1 | 1,918.0 | 2,275 | $16.24 | $4,481.75 | $5,658.10 | $287,699.00 | $123,331.00 | $21,672.54 | $27,346.88 | $27,346.88 | 29.6% |
| 453 | 1986 | 4 | 30 | 992,116 | 2,232.5 | 2,481.9 | 2,233.7 | 2,275 | $16.24 | $4,481.75 | $6,590.30 | $335,061.00 | $657,055.00 | $48,308.35 | $54,914.89 | $54,914.89 | 61.7% |

Little Bayou Meto
Flood Control Pumping Plant
1000-cfs (2 1750-hp)



| | A | B | C | D | E | F | G | H | I | J | K | L | M | N | O | P | Q |
|---|---|---|---|---|---|---|---|---|---|---|---|---|---|---|---|---|---|
| 1 | | | | | | | | | | Minimum | | | | | | | |
| 2 | | | | | | | | | | Monthly | Billing | | | | | | |
| 3 | | | | Metered | | | Billing | Ratchet | Customer | Demand | Demand | Incremental Energy | | Energy | | | Monthly |
| 4 | Period-of-Record | | | Energy | Demands | | Demand | Demand | Charge | Charge | Charge | Block 1 | Block 2 | Charge | Subtotal Bill | Total Bill | Load |
| 5 | YEAR | MO | DAYS | kWh | kWD | kVAD | kWD | kWD | $16.24 | $1.97 | $2.95 | $0.05607 | $0.04493 | kWh | | | Factor |
| 454 | 1986 | 5 | 31 | 788,469 | 1,949.2 | 2,206.9 | 1,986.2 | 2,275 | $16.24 | $4,481.75 | $5,858.70 | $297,937.00 | $490,532.00 | $38,744.93 | $44,619.87 | $44,619.87 | 54.4% |
| 455 | 1986 | 6 | 30 | 984,937 | 2,009.6 | 2,263.4 | 2,037.1 | 2,275 | $16.24 | $4,481.75 | $6,009.15 | $305,564.00 | $679,373.00 | $47,657.20 | $53,682.59 | $53,682.59 | 68.1% |
| 456 | 1986 | 7 | 31 | 0 | 0.0 | 0.0 | 0.0 | 2,275 | $16.24 | $4,481.75 | $0.00 | $0.00 | $0.00 | $0.00 | $16.24 | $4,481.75 | 0.0% |
| 457 | 1986 | 8 | 31 | 41,599 | 898.2 | 1,030.5 | 927.4 | 2,275 | $16.24 | $4,481.75 | $2,734.65 | $139,117.00 | $0.00 | $2,332.45 | $5,083.34 | $5,083.34 | 6.2% |
| 458 | 1986 | 9 | 30 | 40,463 | 850.7 | 984.0 | 885.6 | 2,275 | $16.24 | $4,481.75 | $2,613.70 | $132,840.00 | $0.00 | $2,268.77 | $4,898.71 | $4,898.71 | 6.6% |
| 459 | 1986 | 10 | 31 | 487,238 | 2,134.5 | 2,383.0 | 2,144.7 | 2,275 | $16.24 | $4,481.75 | $6,327.75 | $321,701.00 | $165,537.00 | $25,475.35 | $31,819.34 | $31,819.34 | 30.7% |
| 460 | 1986 | 11 | 30 | 1,223,801 | 2,266.1 | 2,515.7 | 2,264.1 | 2,264 | $16.24 | $4,460.08 | $6,678.80 | $339,621.00 | $884,180.00 | $58,768.76 | $65,463.80 | $65,463.80 | 75.0% |
| 461 | 1986 | 12 | 31 | 1,118,707 | 1,999.8 | 2,254.3 | 2,028.9 | 2,264 | $16.24 | $4,460.08 | $5,985.55 | $304,332.00 | $814,375.00 | $53,653.76 | $59,655.55 | $59,655.55 | 75.2% |
| 462 | 1987 | 1 | 31 | 526,705 | 1,966.1 | 2,222.8 | 2,000.5 | 2,264 | $16.24 | $4,460.08 | $5,902.95 | $300,079.00 | $226,626.00 | $27,007.74 | $32,926.93 | $32,926.93 | 36.0% |
| 463 | 1987 | 2 | 28 | 1,025,894 | 2,154.2 | 2,402.9 | 2,162.6 | 2,264 | $16.24 | $4,460.08 | $6,380.85 | $324,394.00 | $701,500.00 | $49,707.17 | $56,104.26 | $56,104.26 | 70.9% |
| 464 | 1987 | 3 | 31 | 1,393,655 | 2,095.2 | 2,343.0 | 2,108.7 | 2,264 | $16.24 | $4,460.08 | $6,221.55 | $316,301.00 | $1,077,354.00 | $66,140.51 | $72,378.30 | $72,378.30 | 89.4% |
| 465 | 1987 | 4 | 30 | 879,611 | 1,937.1 | 2,195.5 | 1,975.9 | 2,264 | $16.24 | $4,460.08 | $5,829.20 | $296,391.00 | $583,220.00 | $42,822.72 | $48,668.16 | $48,668.16 | 63.1% |
| 466 | 1987 | 5 | 31 | 553,986 | 1,797.7 | 2,062.3 | 1,856.0 | 2,264 | $16.24 | $4,460.08 | $5,475.20 | $278,405.00 | $275,581.00 | $27,992.02 | $33,483.46 | $33,483.46 | 41.4% |
| 467 | 1987 | 6 | 30 | 1,273,642 | 1,943.9 | 2,201.9 | 1,981.7 | 2,264 | $16.24 | $4,460.08 | $5,846.90 | $297,256.00 | $976,386.00 | $60,536.17 | $66,399.31 | $66,399.31 | 91.0% |
| 468 | 1987 | 7 | 31 | 497,980 | 1,863.7 | 2,125.8 | 1,913.2 | 2,264 | $16.24 | $4,460.08 | $5,643.35 | $286,981.00 | $210,999.00 | $25,571.21 | $31,230.80 | $31,230.80 | 35.9% |
| 469 | 1987 | 8 | 31 | 0 | 0.0 | 0.0 | 0.0 | 2,264 | $16.24 | $4,460.08 | $0.00 | $0.00 | $0.00 | $0.00 | $16.24 | $4,460.08 | 0.0% |
| 470 | 1987 | 9 | 30 | 0 | 0.0 | 0.0 | 0.0 | 2,264 | $16.24 | $4,460.08 | $0.00 | $0.00 | $0.00 | $0.00 | $16.24 | $4,460.08 | 0.0% |
| 471 | 1987 | 10 | 31 | 0 | 0.0 | 0.0 | 0.0 | 2,264 | $16.24 | $4,460.08 | $0.00 | $0.00 | $0.00 | $0.00 | $16.24 | $4,460.08 | 0.0% |
| 472 | 1987 | 11 | 30 | 530,422 | 1,761.0 | 2,026.5 | 1,823.9 | 2,163 | $16.24 | $4,261.11 | $5,380.80 | $273,583.00 | $256,839.00 | $26,879.58 | $32,276.62 | $32,276.62 | 41.8% |
| 473 | 1987 | 12 | 31 | 1,112,774 | 2,242.5 | 2,492.0 | 2,242.8 | 2,243 | $16.24 | $4,418.71 | $6,616.85 | $336,421.00 | $776,353.00 | $53,744.67 | $60,377.76 | $60,377.76 | 66.7% |
| 474 | 1988 | 1 | 31 | 1,276,171 | 1,949.2 | 2,206.9 | 1,986.2 | 2,243 | $16.24 | $4,418.71 | $5,858.70 | $297,937.00 | $978,234.00 | $60,657.38 | $66,532.32 | $66,532.32 | 88.0% |
| 475 | 1988 | 2 | 29 | 781,161 | 2,015.2 | 2,268.6 | 2,041.8 | 2,243 | $16.24 | $4,418.71 | $6,023.90 | $306,267.00 | $474,894.00 | $38,509.38 | $44,549.52 | $44,549.52 | 55.7% |
| 476 | 1988 | 3 | 31 | 841,876 | 2,071.5 | 2,320.7 | 2,088.6 | 2,243 | $16.24 | $4,418.71 | $6,162.55 | $313,293.00 | $528,583.00 | $41,315.57 | $47,494.36 | $47,494.36 | 54.6% |
| 477 | 1988 | 4 | 30 | 1,376,008 | 2,019.4 | 2,272.5 | 2,045.3 | 2,243 | $16.24 | $4,418.71 | $6,032.75 | $306,793.00 | $1,069,215.00 | $65,241.71 | $71,290.70 | $71,290.70 | 94.6% |
| 478 | 1988 | 5 | 31 | 896,502 | 1,809.0 | 2,073.2 | 1,865.9 | 2,243 | $16.24 | $4,418.71 | $5,504.70 | $279,887.00 | $616,615.00 | $43,397.78 | $48,918.72 | $48,918.72 | 66.6% |
| 479 | 1988 | 6 | 30 | 144,405 | 1,670.2 | 1,937.2 | 1,743.5 | 2,243 | $16.24 | $4,418.71 | $5,141.85 | $261,522.00 | $0.00 | $8,096.81 | $13,254.90 | $13,254.90 | 12.0% |
| 480 | 1988 | 7 | 31 | 0 | 0.0 | 0.0 | 0.0 | 2,243 | $16.24 | $4,418.71 | $0.00 | $0.00 | $0.00 | $0.00 | $16.24 | $4,418.71 | 0.0% |
| 481 | 1988 | 8 | 31 | 0 | 0.0 | 0.0 | 0.0 | 2,243 | $16.24 | $4,418.71 | $0.00 | $0.00 | $0.00 | $0.00 | $16.24 | $4,418.71 | 0.0% |
| 482 | 1988 | 9 | 30 | 0 | 0.0 | 0.0 | 0.0 | 2,243 | $16.24 | $4,418.71 | $0.00 | $0.00 | $0.00 | $0.00 | $16.24 | $4,418.71 | 0.0% |
| 483 | 1988 | 10 | 31 | 0 | 0.0 | 0.0 | 0.0 | 2,243 | $16.24 | $4,418.71 | $0.00 | $0.00 | $0.00 | $0.00 | $16.24 | $4,418.71 | 0.0% |
| 484 | 1988 | 11 | 30 | 408,618 | 1,776.3 | 2,041.5 | 1,837.3 | 2,243 | $16.24 | $4,418.71 | $5,419.15 | $275,598.00 | $133,020.00 | $21,429.37 | $26,864.76 | $26,864.76 | 32.0% |
| 485 | 1988 | 12 | 31 | 464,787 | 1,811.2 | 2,075.3 | 1,867.8 | 2,089 | $16.24 | $4,115.33 | $5,510.60 | $280,171.00 | $184,616.00 | $24,003.98 | $29,530.82 | $29,530.82 | 34.5% |
| 486 | 1989 | 1 | 31 | 1,266,431 | 1,953.8 | 2,211.2 | 1,990.1 | 2,089 | $16.24 | $4,115.33 | $5,870.50 | $298,518.00 | $967,913.00 | $60,226.24 | $66,112.98 | $66,112.98 | 87.1% |
| 487 | 1989 | 2 | 28 | 1,104,474 | 2,014.5 | 2,268.0 | 2,041.2 | 2,089 | $16.24 | $4,115.33 | $6,020.95 | $306,179.00 | $798,295.00 | $53,034.85 | $59,072.04 | $59,072.04 | 81.6% |
| 488 | 1989 | 3 | 31 | 1,249,561 | 2,038.0 | 2,289.8 | 2,060.8 | 2,061 | $16.24 | $4,060.17 | $6,079.95 | $309,121.00 | $940,440.00 | $59,586.38 | $65,682.57 | $65,682.57 | 82.4% |
| 489 | 1989 | 4 | 30 | 836,896 | 1,953.8 | 2,211.2 | 1,990.1 | 2,061 | $16.24 | $4,060.17 | $5,870.50 | $298,518.00 | $538,378.00 | $40,927.23 | $46,813.97 | $46,813.97 | 59.5% |
| 490 | 1989 | 5 | 31 | 823,819 | 1,791.2 | 2,055.9 | 1,850.3 | 2,061 | $16.24 | $4,060.17 | $5,457.50 | $277,547.00 | $546,272.00 | $40,106.06 | $45,579.80 | $45,579.80 | 61.8% |
| 491 | 1989 | 6 | 30 | 1,192,690 | 2,014.5 | 2,268.0 | 2,041.2 | 2,061 | $16.24 | $4,060.17 | $6,020.95 | $306,179.00 | $886,511.00 | $56,998.40 | $63,035.59 | $63,035.59 | 82.2% |
| 492 | 1989 | 7 | 31 | 906,710 | 1,893.6 | 2,154.3 | 1,938.9 | 2,061 | $16.24 | $4,060.17 | $5,720.05 | $290,835.00 | $615,875.00 | $43,978.38 | $49,714.67 | $49,714.67 | 64.4% |
| 493 | 1989 | 8 | 31 | 0 | 0.0 | 0.0 | 0.0 | 2,061 | $16.24 | $4,060.17 | $0.00 | $0.00 | $0.00 | $0.00 | $16.24 | $4,060.17 | 0.0% |
| 494 | 1989 | 9 | 30 | 220,142 | 1,849.1 | 2,111.8 | 1,900.6 | 2,061 | $16.24 | $4,060.17 | $5,607.95 | $285,092.00 | $0.00 | $12,343.38 | $17,967.57 | $17,967.57 | 16.5% |
| 495 | 1989 | 10 | 31 | 40,798 | 864.6 | 997.7 | 898.0 | 2,061 | $16.24 | $4,060.17 | $2,649.10 | $134,693.00 | $0.00 | $2,287.54 | $4,952.88 | $4,952.88 | 6.3% |
| 496 | 1989 | 11 | 30 | 0 | 0.0 | 0.0 | 0.0 | 2,061 | $16.24 | $4,060.17 | $0.00 | $0.00 | $0.00 | $0.00 | $16.24 | $4,060.17 | 0.0% |
| 497 | 1989 | 12 | 31 | 0 | 0.0 | 0.0 | 0.0 | 2,061 | $16.24 | $4,060.17 | $0.00 | $0.00 | $0.00 | $0.00 | $16.24 | $4,060.17 | 0.0% |
| 498 | 1990 | 1 | 31 | 474,897 | 1,881.2 | 2,142.5 | 1,928.3 | 2,061 | $16.24 | $4,060.17 | $5,687.60 | $289,242.00 | $185,655.00 | $24,559.28 | $30,263.12 | $30,263.12 | 33.9% |
| 499 | 1990 | 2 | 28 | 1,167,685 | 1,964.7 | 2,221.5 | 1,999.3 | 2,061 | $16.24 | $4,060.17 | $5,897.05 | $299,901.00 | $867,784.00 | $55,804.98 | $61,718.27 | $61,718.27 | 88.4% |
| 500 | 1990 | 3 | 31 | 1,438,291 | 2,110.9 | 2,359.0 | 2,123.1 | 2,123 | $16.24 | $4,182.31 | $6,262.85 | $318,460.00 | $1,119,831.00 | $68,170.06 | $74,449.15 | $74,449.15 | 91.6% |
| 501 | 1990 | 4 | 30 | 1,327,614 | 1,931.5 | 2,190.3 | 1,971.2 | 2,123 | $16.24 | $4,182.31 | $5,814.45 | $295,687.00 | $1,031,927.00 | $62,943.65 | $68,774.34 | $68,774.34 | 95.5% |
| 502 | 1990 | 5 | 31 | 1,382,699 | 2,069.2 | 2,318.5 | 2,086.6 | 2,123 | $16.24 | $4,182.31 | $6,156.65 | $312,997.00 | $1,069,702.00 | $65,611.45 | $71,784.34 | $71,784.34 | 89.8% |
| 503 | 1990 | 6 | 30 | 1,093,550 | 1,823.9 | 2,087.5 | 1,878.8 | 2,123 | $16.24 | $4,182.31 | $5,543.05 | $281,817.00 | $811,733.00 | $52,272.64 | $57,831.93 | $57,831.93 | 83.3% |
| 504 | 1990 | 7 | 31 | 512,187 | 1,684.2 | 1,951.1 | 1,756.0 | 2,123 | $16.24 | $4,182.31 | $5,180.20 | $263,395.00 | $248,792.00 | $25,946.78 | $31,143.22 | $31,143.22 | 40.9% |
| 505 | 1990 | 8 | 31 | 280,779 | 841.0 | 974.4 | 877.0 | 2,123 | $16.24 | $4,182.31 | $2,587.15 | $131,547.00 | $149,232.00 | $14,080.83 | $16,684.22 | $16,684.22 | 44.9% |
| 506 | 1990 | 9 | 30 | 0 | 0.0 | 0.0 | 0.0 | 2,123 | $16.24 | $4,182.31 | $0.00 | $0.00 | $0.00 | $0.00 | $16.24 | $4,182.31 | 0.0% |
| 507 | 1990 | 10 | 31 | 322,049 | 1,710.3 | 1,976.9 | 1,779.2 | 2,123 | $16.24 | $4,182.31 | $5,248.05 | $266,879.00 | $55,170.00 | $17,442.69 | $22,706.98 | $22,706.98 | 25.3% |
| 508 | 1990 | 11 | 30 | 0 | 0.0 | 0.0 | 0.0 | 2,123 | $16.24 | $4,182.31 | $0.00 | $0.00 | $0.00 | $0.00 | $16.24 | $4,182.31 | 0.0% |
| 509 | 1990 | 12 | 31 | 442,800 | 1,707.6 | 1,974.2 | 1,776.8 | 2,123 | $16.24 | $4,182.31 | $5,242.15 | $266,520.00 | $176,280.00 | $22,864.04 | $28,122.43 | $28,122.43 | 34.9% |

Little Bayou Meto
Flood Control Pumping Plant
1000-cfs (2 1750-hp)



| | A | B | C | D | E | F | G | H | I | J | K | L | M | N | O | P | Q |
|---|---|---|---|---|---|---|---|---|---|---|---|---|---|---|---|---|---|
| 1 | | | | | | | | | | Minimum | | | | | | | |
| 2 | | | | | | | | | | Monthly | Billing | | | | | | |
| 3 | | | | Metered | | | Billing | Ratchet | Customer | Demand | Demand | Incremental Energy | | Energy | | | Monthly |
| 4 | Period-of-Record | | | Energy | Demands | | Demand | Demand | Charge | Charge | Charge | Block 1 | Block 2 | Charge | Subtotal Bill | Total Bill | Load |
| 5 | YEAR | MO | DAYS | kWh | kWD | kVAD | kWD | kWD | $16.24 | $1.97 | $2.95 | $0.05607 | $0.04493 | kWh | | | Factor |
| 510 | 1991 | 1 | 31 | 1,112,658 | 1,924.7 | 2,183.8 | 1,965.5 | 2,123 | $16.24 | $4,182.31 | $5,796.75 | $294,818.00 | $817,840.00 | $53,276.00 | $59,088.99 | $59,088.99 | 77.7% |
| 511 | 1991 | 2 | 28 | 323,985 | 1,733.2 | 1,999.4 | 1,799.5 | 2,123 | $16.24 | $4,182.31 | $5,307.05 | $269,922.00 | $54,063.00 | $17,563.58 | $22,886.87 | $22,886.87 | 27.8% |
| 512 | 1991 | 3 | 31 | 501,519 | 1,689.6 | 1,956.4 | 1,760.8 | 2,087 | $16.24 | $4,111.39 | $5,194.95 | $264,118.00 | $237,401.00 | $25,475.52 | $30,686.71 | $30,686.71 | 39.9% |
| 513 | 1991 | 4 | 30 | 1,232,578 | 1,939.2 | 2,197.5 | 1,977.7 | 2,087 | $16.24 | $4,111.39 | $5,835.10 | $296,661.00 | $935,917.00 | $58,684.53 | $64,535.87 | $64,535.87 | 88.3% |
| 514 | 1991 | 5 | 31 | 932,999 | 1,815.2 | 2,079.1 | 1,871.2 | 1,978 | $16.24 | $3,896.66 | $5,519.45 | $280,683.00 | $652,316.00 | $45,046.45 | $50,582.14 | $50,582.14 | 69.1% |
| 515 | 1991 | 6 | 30 | 325,633 | 1,871.4 | 2,133.2 | 1,919.8 | 1,978 | $16.24 | $3,896.66 | $5,664.00 | $287,975.00 | $37,658.00 | $17,838.73 | $23,518.97 | $23,518.97 | 24.2% |
| 516 | 1991 | 7 | 31 | 0 | 0.0 | 0.0 | 0.0 | 1,978 | $16.24 | $3,896.66 | $0.00 | $0.00 | $0.00 | $0.00 | $16.24 | $3,896.66 | 0.0% |
| 517 | 1991 | 8 | 31 | 0 | 0.0 | 0.0 | 0.0 | 1,978 | $16.24 | $3,896.66 | $0.00 | $0.00 | $0.00 | $0.00 | $16.24 | $3,896.66 | 0.0% |
| 518 | 1991 | 9 | 30 | 0 | 0.0 | 0.0 | 0.0 | 1,978 | $16.24 | $3,896.66 | $0.00 | $0.00 | $0.00 | $0.00 | $16.24 | $3,896.66 | 0.0% |
| 519 | 1991 | 10 | 31 | 89,974 | 2,067.4 | 2,316.9 | 2,085.2 | 2,085 | $16.24 | $4,107.45 | $6,150.75 | $312,785.00 | $0.00 | $5,044.84 | $11,211.83 | $11,211.83 | 5.8% |
| 520 | 1991 | 11 | 30 | 1,022,882 | 2,099.9 | 2,347.8 | 2,113.0 | 2,113 | $16.24 | $4,162.61 | $6,233.35 | $316,955.00 | $705,927.00 | $49,488.97 | $55,738.56 | $55,738.56 | 67.7% |
| 521 | 1991 | 12 | 31 | 1,335,963 | 1,998.1 | 2,252.7 | 2,027.4 | 2,113 | $16.24 | $4,162.61 | $5,979.65 | $304,111.00 | $1,031,852.00 | $63,412.61 | $69,408.50 | $69,408.50 | 89.9% |
| 522 | 1992 | 1 | 31 | 620,498 | 2,045.6 | 2,296.7 | 2,067.1 | 2,113 | $16.24 | $4,162.61 | $6,097.65 | $310,061.00 | $310,437.00 | $31,333.05 | $37,446.94 | $37,446.94 | 40.8% |
| 523 | 1992 | 2 | 29 | 144,508 | 1,681.5 | 1,948.4 | 1,753.6 | 2,113 | $16.24 | $4,162.61 | $5,174.30 | $263,033.00 | $0.00 | $8,102.55 | $13,293.09 | $13,293.09 | 12.3% |
| 524 | 1992 | 3 | 31 | 883,583 | 1,737.3 | 2,003.4 | 1,803.0 | 2,113 | $16.24 | $4,162.61 | $5,318.85 | $270,457.00 | $613,126.00 | $42,712.28 | $48,047.37 | $48,047.37 | 68.4% |
| 525 | 1992 | 4 | 30 | 454,153 | 1,949.6 | 2,207.3 | 1,986.5 | 2,113 | $16.24 | $4,162.61 | $5,861.65 | $297,982.00 | $156,171.00 | $23,724.61 | $29,602.50 | $29,602.50 | 32.4% |
| 526 | 1992 | 5 | 31 | 501,502 | 1,670.2 | 1,937.2 | 1,743.5 | 2,113 | $16.24 | $4,162.61 | $5,141.85 | $261,522.00 | $239,980.00 | $25,445.84 | $30,603.93 | $30,603.93 | 40.4% |
| 527 | 1992 | 6 | 30 | 1,239,468 | 1,843.0 | 2,106.0 | 1,895.4 | 2,113 | $16.24 | $4,162.61 | $5,590.25 | $284,304.00 | $955,164.00 | $58,856.44 | $64,462.93 | $64,462.93 | 93.4% |
| 528 | 1992 | 7 | 31 | 1,127,980 | 1,910.7 | 2,170.5 | 1,953.5 | 2,113 | $16.24 | $4,162.61 | $5,761.35 | $293,022.00 | $834,958.00 | $53,944.41 | $59,722.00 | $59,722.00 | 79.3% |
| 529 | 1992 | 8 | 31 | 456,994 | 2,124.9 | 2,373.2 | 2,135.9 | 2,136 | $16.24 | $4,207.92 | $6,301.20 | $320,382.00 | $136,612.00 | $24,101.80 | $30,419.24 | $30,419.24 | 28.9% |
| 530 | 1992 | 9 | 30 | 141,965 | 1,670.2 | 1,937.2 | 1,743.5 | 2,136 | $16.24 | $4,207.92 | $5,141.85 | $261,522.00 | $0.00 | $7,959.97 | $13,118.06 | $13,118.06 | 11.8% |
| 531 | 1992 | 10 | 31 | 0 | 0.0 | 0.0 | 0.0 | 2,136 | $16.24 | $4,207.92 | $0.00 | $0.00 | $0.00 | $0.00 | $16.24 | $4,207.92 | 0.0% |
| 532 | 1992 | 11 | 30 | 678,255 | 2,191.8 | 2,440.9 | 2,196.8 | 2,197 | $16.24 | $4,328.09 | $6,481.15 | $329,525.00 | $348,730.00 | $34,144.91 | $40,642.30 | $40,642.30 | 43.0% |
| 533 | 1992 | 12 | 31 | 1,139,291 | 2,223.9 | 2,473.3 | 2,226.0 | 2,226 | $16.24 | $4,385.22 | $6,566.70 | $333,894.00 | $805,397.00 | $54,907.92 | $61,490.86 | $61,490.86 | 68.9% |
| 534 | 1993 | 1 | 31 | 1,301,668 | 2,270.8 | 2,520.4 | 2,268.3 | 2,268 | $16.24 | $4,467.96 | $6,690.60 | $340,250.00 | $961,418.00 | $62,274.33 | $68,981.17 | $68,981.17 | 77.0% |
| 535 | 1993 | 2 | 28 | 807,337 | 2,157.7 | 2,406.5 | 2,165.8 | 2,268 | $16.24 | $4,467.96 | $6,389.70 | $324,872.00 | $482,465.00 | $39,892.73 | $46,298.67 | $46,298.67 | 55.7% |
| 536 | 1993 | 3 | 31 | 1,042,272 | 2,230.4 | 2,479.8 | 2,231.8 | 2,268 | $16.24 | $4,467.96 | $6,584.40 | $334,769.00 | $707,503.00 | $50,558.61 | $57,159.25 | $57,159.25 | 62.8% |
| 537 | 1993 | 4 | 30 | 1,327,620 | 2,155.5 | 2,404.2 | 2,163.8 | 2,268 | $16.24 | $4,467.96 | $6,383.80 | $324,573.00 | $1,003,047.00 | $63,265.71 | $69,665.75 | $69,665.75 | 85.5% |
| 538 | 1993 | 5 | 31 | 1,395,450 | 1,948.2 | 2,205.9 | 1,985.4 | 2,268 | $16.24 | $4,467.96 | $5,855.75 | $297,803.00 | $1,097,647.00 | $66,015.09 | $71,887.08 | $71,887.08 | 96.3% |
| 539 | 1993 | 6 | 30 | 1,333,199 | 1,923.0 | 2,182.2 | 1,964.0 | 2,268 | $16.24 | $4,467.96 | $5,793.80 | $294,601.00 | $1,038,598.00 | $63,182.49 | $68,992.53 | $68,992.53 | 96.3% |
| 540 | 1993 | 7 | 31 | 332,871 | 1,836.5 | 2,099.7 | 1,889.7 | 2,268 | $16.24 | $4,467.96 | $5,575.50 | $283,458.00 | $49,413.00 | $18,113.62 | $23,705.36 | $23,705.36 | 24.4% |
| 541 | 1993 | 8 | 31 | 246,868 | 1,795.5 | 2,060.1 | 1,854.1 | 2,268 | $16.24 | $4,467.96 | $5,469.30 | $278,119.00 | $0.00 | $13,841.91 | $19,327.45 | $19,327.45 | 18.5% |
| 542 | 1993 | 9 | 30 | 66,223 | 1,843.0 | 2,106.0 | 1,895.4 | 2,268 | $16.24 | $4,467.96 | $5,590.25 | $284,304.00 | $0.00 | $3,713.12 | $9,319.61 | $9,319.61 | 5.0% |
| 543 | 1993 | 10 | 31 | 128,673 | 1,899.6 | 2,160.0 | 1,944.0 | 2,268 | $16.24 | $4,467.96 | $5,734.80 | $291,602.00 | $0.00 | $7,214.69 | $12,965.73 | $12,965.73 | 9.1% |
| 544 | 1993 | 11 | 30 | 543,272 | 1,951.0 | 2,208.6 | 1,987.7 | 2,268 | $16.24 | $4,467.96 | $5,864.60 | $298,161.00 | $245,111.00 | $27,730.72 | $33,611.56 | $33,611.56 | 38.7% |
| 545 | 1993 | 12 | 31 | 1,026,440 | 1,969.3 | 2,225.8 | 2,003.2 | 2,268 | $16.24 | $4,467.96 | $5,908.85 | $300,480.00 | $725,960.00 | $49,465.30 | $55,390.39 | $55,390.39 | 70.1% |
| 546 | 1994 | 1 | 31 | 211,430 | 984.3 | 1,112.6 | 1,001.3 | 2,232 | $16.24 | $4,397.04 | $2,952.95 | $150,195.00 | $61,235.00 | $11,172.72 | $14,141.91 | $14,141.91 | 28.9% |
| 547 | 1994 | 2 | 28 | 523,629 | 1,906.0 | 2,166.1 | 1,949.5 | 2,232 | $16.24 | $4,397.04 | $5,749.55 | $292,422.00 | $231,207.00 | $26,784.23 | $32,550.02 | $32,550.02 | 40.9% |
| 548 | 1994 | 3 | 31 | 1,166,957 | 1,856.4 | 2,118.8 | 1,906.9 | 2,164 | $16.24 | $4,263.08 | $5,625.65 | $286,040.00 | $880,917.00 | $55,617.86 | $61,259.75 | $61,259.75 | 84.5% |
| 549 | 1994 | 4 | 30 | 1,073,858 | 2,238.2 | 2,487.7 | 2,238.9 | 2,239 | $16.24 | $4,410.83 | $6,605.05 | $335,838.00 | $738,020.00 | $51,989.68 | $58,610.97 | $58,610.97 | 66.6% |
| 550 | 1994 | 5 | 31 | 1,264,942 | 2,036.3 | 2,288.2 | 2,059.4 | 2,239 | $16.24 | $4,410.83 | $6,074.05 | $308,907.00 | $956,035.00 | $60,275.07 | $66,365.36 | $66,365.36 | 83.5% |
| 551 | 1994 | 6 | 30 | 970,012 | 1,758.8 | 2,024.4 | 1,822.0 | 2,239 | $16.24 | $4,410.83 | $5,374.90 | $273,295.00 | $696,717.00 | $46,627.15 | $52,018.29 | $52,018.29 | 76.6% |
| 552 | 1994 | 7 | 31 | 371,726 | 1,909.4 | 2,169.3 | 1,952.4 | 2,239 | $16.24 | $4,410.83 | $5,758.40 | $292,858.00 | $78,868.00 | $19,964.09 | $25,738.73 | $25,738.73 | 26.2% |
| 553 | 1994 | 8 | 31 | 0 | 0.0 | 0.0 | 0.0 | 2,239 | $16.24 | $4,410.83 | $0.00 | $0.00 | $0.00 | $0.00 | $16.24 | $4,410.83 | 0.0% |
| 554 | 1994 | 9 | 30 | 0 | 0.0 | 0.0 | 0.0 | 2,239 | $16.24 | $4,410.83 | $0.00 | $0.00 | $0.00 | $0.00 | $16.24 | $4,410.83 | 0.0% |
| 555 | 1994 | 10 | 31 | 0 | 0.0 | 0.0 | 0.0 | 2,239 | $16.24 | $4,410.83 | $0.00 | $0.00 | $0.00 | $0.00 | $16.24 | $4,410.83 | 0.0% |
| 556 | 1994 | 11 | 30 | 712,250 | 2,247.2 | 2,496.7 | 2,247.0 | 2,247 | $16.24 | $4,426.59 | $6,628.65 | $337,052.00 | $375,198.00 | $35,756.15 | $42,401.04 | $42,401.04 | 44.0% |
| 557 | 1994 | 12 | 31 | 888,018 | 2,042.8 | 2,294.2 | 2,064.8 | 2,247 | $16.24 | $4,426.59 | $6,091.75 | $309,719.00 | $578,299.00 | $43,348.92 | $49,456.91 | $49,456.91 | 58.4% |
| 558 | 1995 | 1 | 31 | 868,167 | 2,204.6 | 2,453.8 | 2,208.4 | 2,247 | $16.24 | $4,426.59 | $6,513.60 | $331,264.00 | $536,903.00 | $42,697.02 | $49,226.86 | $49,226.86 | 52.9% |
| 559 | 1995 | 2 | 28 | 256,196 | 1,973.8 | 2,230.1 | 2,007.0 | 2,247 | $16.24 | $4,426.59 | $5,920.65 | $301,057.00 | $0.00 | $14,364.92 | $20,301.81 | $20,301.81 | 19.3% |
| 560 | 1995 | 3 | 31 | 967,465 | 2,017.7 | 2,270.9 | 2,043.8 | 2,247 | $16.24 | $4,426.59 | $6,029.80 | $306,574.00 | $660,891.00 | $46,883.44 | $52,929.48 | $52,929.48 | 64.4% |
| 561 | 1995 | 4 | 30 | 794,282 | 1,893.6 | 2,154.3 | 1,938.9 | 2,247 | $16.24 | $4,426.59 | $5,720.05 | $290,835.00 | $503,447.00 | $38,926.99 | $44,663.28 | $44,663.28 | 58.3% |
| 562 | 1995 | 5 | 31 | 1,422,716 | 2,022.9 | 2,275.8 | 2,048.2 | 2,247 | $16.24 | $4,426.59 | $6,041.60 | $307,231.00 | $1,115,485.00 | $67,345.18 | $73,403.02 | $73,403.02 | 94.5% |
| 563 | 1995 | 6 | 30 | 778,476 | 2,383.6 | 2,632.9 | 2,369.6 | 2,370 | $16.24 | $4,668.90 | $6,991.50 | $355,444.00 | $423,032.00 | $38,936.57 | $45,944.31 | $45,944.31 | 45.4% |
| 564 | 1995 | 7 | 31 | 617,315 | 2,289.7 | 2,539.3 | 2,285.4 | 2,370 | $16.24 | $4,668.90 | $6,740.75 | $342,803.00 | $274,512.00 | $31,554.79 | $38,311.78 | $38,311.78 | 36.2% |
| 565 | 1995 | 8 | 31 | 213,922 | 1,873.5 | 2,135.2 | 1,921.7 | 2,370 | $16.24 | $4,668.90 | $5,669.90 | $288,251.00 | $0.00 | $11,994.62 | $17,680.76 | $17,680.76 | 15.3% |

| | A | B | C | D | E | F | G | H | I | J | K | L | M | N | O | P | Q |
|---|---|---|---|---|---|---|---|---|---|---|---|---|---|---|---|---|---|
| 1 | | | | | | | | | | Minimum | | | | | | | |
| 2 | | | | | | | | | | Monthly | Billing | | | | | | |
| 3 | | | | Metered | | | Billing | Ratchet | Customer | Demand | Demand | Incremental Energy | | Energy | | | Monthly |
| 4 | Period-of-Record | | | Energy | Demands | | Demand | Demand | Charge | Charge | Charge | Block 1 | Block 2 | Charge | Subtotal Bill | Total Bill | Load |
| 5 | YEAR | MO | DAYS | kWh | kWD | kVAD | kWD | kWD | $16.24 | $1.97 | $2.95 | $0.05607 | $0.04493 | kWh | | | Factor |
| 566 | 1995 | 9 | 30 | 0 | 0.0 | 0.0 | 0.0 | 2,370 | $16.24 | $4,668.90 | $0.00 | $0.00 | $0.00 | $0.00 | $16.24 | $4,668.90 | 0.0% |
| 567 | 1995 | 10 | 31 | 0 | 0.0 | 0.0 | 0.0 | 2,370 | $16.24 | $4,668.90 | $0.00 | $0.00 | $0.00 | $0.00 | $16.24 | $4,668.90 | 0.0% |
| 568 | 1995 | 11 | 30 | 0 | 0.0 | 0.0 | 0.0 | 2,370 | $16.24 | $4,668.90 | $0.00 | $0.00 | $0.00 | $0.00 | $16.24 | $4,668.90 | 0.0% |
| 569 | 1995 | 12 | 31 | 0 | 0.0 | 0.0 | 0.0 | 2,370 | $16.24 | $4,668.90 | $0.00 | $0.00 | $0.00 | $0.00 | $16.24 | $4,668.90 | 0.0% |
| 570 | 1996 | 1 | 31 | 0 | 0.0 | 0.0 | 0.0 | 2,370 | $16.24 | $4,668.90 | $0.00 | $0.00 | $0.00 | $0.00 | $16.24 | $4,668.90 | 0.0% |
| 571 | 1996 | 2 | 29 | 0 | 0.0 | 0.0 | 0.0 | 2,370 | $16.24 | $4,668.90 | $0.00 | $0.00 | $0.00 | $0.00 | $16.24 | $4,668.90 | 0.0% |
| 572 | 1996 | 3 | 31 | 20,648 | 860.3 | 993.5 | 894.2 | 2,370 | $16.24 | $4,668.90 | $2,637.30 | $134,127.00 | $0.00 | $1,157.73 | $3,811.27 | $4,668.90 | 3.2% |
| 573 | 1996 | 4 | 30 | 393,769 | 2,194.4 | 2,443.6 | 2,199.2 | 2,370 | $16.24 | $4,668.90 | $6,487.05 | $329,882.00 | $63,887.00 | $21,366.93 | $27,870.22 | $27,870.22 | 24.9% |
| 574 | 1996 | 5 | 31 | 844,931 | 1,878.2 | 2,139.7 | 1,925.7 | 2,370 | $16.24 | $4,668.90 | $5,681.70 | $288,857.00 | $556,074.00 | $41,180.62 | $46,878.56 | $46,878.56 | 60.5% |
| 575 | 1996 | 6 | 30 | 641,007 | 1,840.4 | 2,103.4 | 1,893.1 | 2,285 | $16.24 | $4,501.45 | $5,584.35 | $283,965.00 | $357,042.00 | $31,963.81 | $37,564.40 | $37,564.40 | 48.4% |
| 576 | 1996 | 7 | 31 | 0 | 0.0 | 0.0 | 0.0 | 2,199 | $16.24 | $4,332.03 | $0.00 | $0.00 | $0.00 | $0.00 | $16.24 | $4,332.03 | 0.0% |
| 577 | 1996 | 8 | 31 | 406,004 | 1,770.2 | 2,035.5 | 1,832.0 | 2,199 | $16.24 | $4,332.03 | $5,404.40 | $274,793.00 | $131,211.00 | $21,302.95 | $26,723.59 | $26,723.59 | 30.8% |
| 578 | 1996 | 9 | 30 | 156,325 | 2,057.9 | 2,308.1 | 2,077.3 | 2,199 | $16.24 | $4,332.03 | $6,127.15 | $311,595.00 | $0.00 | $8,765.13 | $14,908.52 | $14,908.52 | 10.6% |
| 579 | 1996 | 10 | 31 | 382,045 | 2,013.1 | 2,266.7 | 2,040.0 | 2,199 | $16.24 | $4,332.03 | $6,018.00 | $306,003.00 | $76,042.00 | $20,574.16 | $26,608.40 | $26,608.40 | 25.5% |
| 580 | 1996 | 11 | 30 | 1,073,287 | 2,236.1 | 2,485.5 | 2,237.0 | 2,237 | $16.24 | $4,406.89 | $6,599.15 | $335,547.00 | $737,740.00 | $51,960.78 | $58,576.17 | $58,576.17 | 66.7% |
| 581 | 1996 | 12 | 31 | 1,329,040 | 2,154.6 | 2,403.4 | 2,163.0 | 2,237 | $16.24 | $4,406.89 | $6,380.85 | $324,454.00 | $1,004,586.00 | $63,328.18 | $69,725.27 | $69,725.27 | 82.9% |
| 582 | 1997 | 1 | 31 | 645,200 | 1,809.9 | 2,074.1 | 1,866.7 | 2,237 | $16.24 | $4,406.89 | $5,507.65 | $280,000.00 | $365,200.00 | $32,108.04 | $37,631.93 | $37,631.93 | 47.9% |
| 583 | 1997 | 2 | 28 | 1,033,671 | 2,052.4 | 2,303.1 | 2,072.8 | 2,237 | $16.24 | $4,406.89 | $6,115.35 | $310,914.00 | $722,757.00 | $49,906.42 | $56,038.01 | $56,038.01 | 74.9% |
| 584 | 1997 | 3 | 31 | 1,319,641 | 1,992.8 | 2,247.8 | 2,023.0 | 2,237 | $16.24 | $4,406.89 | $5,967.85 | $303,449.00 | $1,016,192.00 | $62,671.89 | $68,655.98 | $68,655.98 | 89.0% |
| 585 | 1997 | 4 | 30 | 1,133,410 | 1,986.5 | 2,241.9 | 2,017.7 | 2,237 | $16.24 | $4,406.89 | $5,953.10 | $302,653.00 | $830,757.00 | $54,295.67 | $60,265.01 | $60,265.01 | 79.2% |
| 586 | 1997 | 5 | 31 | 748,215 | 1,783.7 | 2,048.7 | 1,843.8 | 2,237 | $16.24 | $4,406.89 | $5,439.80 | $276,574.00 | $471,641.00 | $36,698.33 | $42,154.37 | $42,154.37 | 56.4% |
| 587 | 1997 | 6 | 30 | 858,612 | 1,892.3 | 2,153.1 | 1,937.8 | 2,237 | $16.24 | $4,406.89 | $5,717.10 | $290,670.00 | $567,942.00 | $41,815.50 | $47,548.84 | $47,548.84 | 63.0% |
| 588 | 1997 | 7 | 31 | 617,843 | 1,865.0 | 2,127.0 | 1,914.3 | 2,237 | $16.24 | $4,406.89 | $5,646.30 | $287,147.00 | $330,696.00 | $30,958.50 | $36,621.04 | $36,621.04 | 44.5% |
| 589 | 1997 | 8 | 31 | 84,001 | 1,761.0 | 2,026.5 | 1,823.9 | 2,237 | $16.24 | $4,406.89 | $5,380.80 | $273,583.00 | $0.00 | $4,709.94 | $10,106.98 | $10,106.98 | 6.4% |
| 590 | 1997 | 9 | 30 | 60,126 | 835.1 | 968.6 | 871.7 | 2,237 | $16.24 | $4,406.89 | $2,572.40 | $130,761.00 | $0.00 | $3,371.28 | $5,959.92 | $5,959.92 | 10.0% |
| 591 | 1997 | 10 | 31 | 124,894 | 1,773.7 | 2,038.9 | 1,835.0 | 2,237 | $16.24 | $4,406.89 | $5,413.25 | $275,254.00 | $0.00 | $7,002.83 | $12,432.32 | $12,432.32 | 9.5% |
| 592 | 1997 | 11 | 30 | 0 | 0.0 | 0.0 | 0.0 | 2,163 | $16.24 | $4,261.11 | $0.00 | $0.00 | $0.00 | $0.00 | $16.24 | $4,261.11 | 0.0% |
| 593 | 1997 | 12 | 31 | 531,865 | 1,943.4 | 2,201.5 | 1,981.3 | 2,073 | $16.24 | $4,083.81 | $5,843.95 | $297,202.00 | $234,663.00 | $27,207.52 | $33,067.71 | $33,067.71 | 36.8% |
| 594 | 1998 | 1 | 31 | 42,368 | 1,765.3 | 2,030.8 | 1,827.7 | 2,073 | $16.24 | $4,083.81 | $5,392.60 | $274,160.00 | $0.00 | $2,375.59 | $7,784.43 | $7,784.43 | 3.2% |
| 595 | | | | | | | | | | | | | | | | | |
| 596 | MONTHS | 589 | SUM | 233,452,583 | #N/A | #N/A | #N/A | #N/A | $9,565.36 | $2,352,999.52 | $1,875,763.40 | $95,381,125.00 | $145,413,261.00 | $11,469,782.46 | $13,355,111.22 | $14,269,866.72 | #N/A |
| 597 | YEARS | 49.08 | MIN | 0 | 0.0 | 0.0 | 0.0 | 0 | $16.24 | $0.00 | $0.00 | $0.00 | $0.00 | $0.00 | $16.24 | $16.24 | 0.0% |
| 598 | DAYS | 17,928 | AVG | 396,354 | 1,055.5 | 1,199.5 | 1,079.6 | 2,028 | $16.24 | $3,994.91 | $3,184.66 | $161,937.39 | $246,881.60 | $19,473.31 | $22,674.21 | $24,227.28 | 29.0% |
| 599 | kHOURS | 430.3 | MAX | 1,500,326 | 2,383.6 | 2,632.9 | 2,369.6 | 2,370 | $16.24 | $4,668.90 | $6,991.50 | $355,444.00 | $1,157,328.00 | $71,230.64 | $77,993.53 | $77,993.53 | 99.2% |
| 600 | | | ANNUAL | 4,756,250 | #N/A | #N/A | #N/A | #N/A | $194.88 | $47,938.87 | $38,215.89 | $1,943,248.73 | $2,962,579.17 | $233,679.78 | $272,090.55 | $290,727.34 | #N/A |
| 601 | | | | | | | | | | | | | | | | Lifetime LF: | 22.8% |

Little Bayou Meto
Flood Control Pumping Plant
3000-cfs (2 4000-hp)



| | A | B | C | D | E | F | G | H | I | J | K | L | M | N | O | P | Q |
|---|---|---|---|---|---|---|---|---|---|---|---|---|---|---|---|---|---|
| 1 | | | | | | | | | | Minimum | | | | | | | |
| 2 | | | | | | | | | | Monthly | Billing | | | | | | |
| 3 | | | | Metered | | | Billing | Ratchet | Customer | Demand | Demand | Incremental Energy | | Energy | | | Monthly |
| 4 | Period-of-Record | | | Energy | Demands | | Demand | Demand | Charge | Charge | Charge | Block 1 | Block 2 | Charge | Subtotal Bill | Total Bill | Load |
| 5 | YEAR | MO | DAYS | kWh | kWD | kVAD | kWD | kWD | $16.24 | $1.97 | $2.95 | $0.05607 | $0.04493 | kWh | | | Factor |
| 6 | 1949 | 1 | 31 | 743,884 | 8,451.9 | 10,587.3 | 8,452 | 8,452 | $16.24 | $16,650.44 | $24,933.40 | $1,267,788.00 | $0.00 | $41,709.57 | $66,659.21 | $66,659.21 | 11.8% |
| 7 | 1949 | 2 | 28 | 2,296,878 | 7,871.0 | 9,990.2 | 7,871 | 8,452 | $16.24 | $16,650.44 | $23,219.45 | $1,180,646.00 | $1,116,232.00 | $116,351.12 | $139,586.81 | $139,586.81 | 43.4% |
| 8 | 1949 | 3 | 31 | 468,207 | 7,092.5 | 9,162.4 | 7,093 | 8,452 | $16.24 | $16,650.44 | $20,924.35 | $1,063,880.00 | $0.00 | $26,252.39 | $47,192.98 | $47,192.98 | 8.9% |
| 9 | 1949 | 4 | 30 | 148,993 | 6,208.1 | 8,182.1 | 6,208 | 8,452 | $16.24 | $16,650.44 | $18,313.60 | $931,209.00 | $0.00 | $8,354.06 | $26,683.90 | $26,683.90 | 3.3% |
| 10 | 1949 | 5 | 31 | 447,410 | 6,590.0 | 8,610.7 | 6,590 | 8,452 | $16.24 | $16,650.44 | $19,440.50 | $988,507.00 | $0.00 | $25,086.30 | $44,543.04 | $44,543.04 | 9.1% |
| 11 | 1949 | 6 | 30 | 762,444 | 7,148.6 | 9,223.1 | 7,149 | 8,452 | $16.24 | $16,650.44 | $21,089.55 | $1,072,297.00 | $0.00 | $42,750.25 | $63,856.04 | $63,856.04 | 14.8% |
| 12 | 1949 | 7 | 31 | 0 | 0.0 | 0.0 | 0 | 8,452 | $16.24 | $16,650.44 | $0.00 | $0.00 | $0.00 | $0.00 | $16.24 | $16,650.44 | 0.0% |
| 13 | 1949 | 8 | 31 | 0 | 0.0 | 0.0 | 0 | 8,452 | $16.24 | $16,650.44 | $0.00 | $0.00 | $0.00 | $0.00 | $16.24 | $16,650.44 | 0.0% |
| 14 | 1949 | 9 | 30 | 0 | 0.0 | 0.0 | 0 | 8,452 | $16.24 | $16,650.44 | $0.00 | $0.00 | $0.00 | $0.00 | $16.24 | $16,650.44 | 0.0% |
| 15 | 1949 | 10 | 31 | 0 | 0.0 | 0.0 | 0 | 8,452 | $16.24 | $16,650.44 | $0.00 | $0.00 | $0.00 | $0.00 | $16.24 | $16,650.44 | 0.0% |
| 16 | 1949 | 11 | 30 | 0 | 0.0 | 0.0 | 0 | 8,452 | $16.24 | $16,650.44 | $0.00 | $0.00 | $0.00 | $0.00 | $16.24 | $16,650.44 | 0.0% |
| 17 | 1949 | 12 | 31 | 0 | 0.0 | 0.0 | 0 | 8,452 | $16.24 | $16,650.44 | $0.00 | $0.00 | $0.00 | $0.00 | $16.24 | $16,650.44 | 0.0% |
| 18 | 1950 | 1 | 31 | 1,315,773 | 6,793.4 | 8,835.7 | 6,793 | 7,871 | $16.24 | $15,505.87 | $20,039.35 | $1,019,017.00 | $296,756.00 | $70,469.53 | $90,525.12 | $90,525.12 | 26.0% |
| 19 | 1950 | 2 | 28 | 1,780,766 | 7,286.0 | 9,371.1 | 7,286 | 7,286 | $16.24 | $14,353.42 | $21,493.70 | $1,092,901.00 | $687,865.00 | $92,184.73 | $113,694.67 | $113,694.67 | 36.4% |
| 20 | 1950 | 3 | 31 | 553,404 | 1,773.7 | 2,337.7 | 1,774 | 7,286 | $16.24 | $14,353.42 | $5,233.30 | $266,060.00 | $287,344.00 | $27,828.35 | $33,077.89 | $33,077.89 | 41.9% |
| 21 | 1950 | 4 | 30 | 297,987 | 1,773.7 | 2,337.7 | 1,774 | 7,286 | $16.24 | $14,353.42 | $5,233.30 | $266,060.00 | $31,927.00 | $16,352.46 | $21,602.00 | $21,602.00 | 23.3% |
| 22 | 1950 | 5 | 31 | 740,705 | 8,281.4 | 10,413.9 | 8,281 | 8,281 | $16.24 | $16,313.57 | $24,428.95 | $1,242,217.00 | $0.00 | $41,531.35 | $65,976.54 | $65,976.54 | 12.0% |
| 23 | 1950 | 6 | 30 | 0 | 0.0 | 0.0 | 0 | 8,281 | $16.24 | $16,313.57 | $0.00 | $0.00 | $0.00 | $0.00 | $16.24 | $16,313.57 | 0.0% |
| 24 | 1950 | 7 | 31 | 131,131 | 5,463.8 | 6,969.8 | 5,464 | 8,281 | $16.24 | $16,313.57 | $16,118.80 | $819,571.00 | $0.00 | $7,352.54 | $23,487.58 | $23,487.58 | 3.2% |
| 25 | 1950 | 8 | 31 | 300,530 | 7,278.1 | 9,362.6 | 7,278 | 8,281 | $16.24 | $16,313.57 | $21,470.10 | $1,091,709.00 | $0.00 | $16,850.69 | $38,337.03 | $38,337.03 | 5.6% |
| 26 | 1950 | 9 | 30 | 331,022 | 7,250.2 | 9,332.7 | 7,250 | 8,281 | $16.24 | $16,313.57 | $21,387.50 | $1,087,534.00 | $0.00 | $18,560.39 | $39,964.13 | $39,964.13 | 6.3% |
| 27 | 1950 | 10 | 31 | 0 | 0.0 | 0.0 | 0 | 8,281 | $16.24 | $16,313.57 | $0.00 | $0.00 | $0.00 | $0.00 | $16.24 | $16,313.57 | 0.0% |
| 28 | 1950 | 11 | 30 | 0 | 0.0 | 0.0 | 0 | 8,281 | $16.24 | $16,313.57 | $0.00 | $0.00 | $0.00 | $0.00 | $16.24 | $16,313.57 | 0.0% |
| 29 | 1950 | 12 | 31 | 0 | 0.0 | 0.0 | 0 | 8,281 | $16.24 | $16,313.57 | $0.00 | $0.00 | $0.00 | $0.00 | $16.24 | $16,313.57 | 0.0% |
| 30 | 1951 | 1 | 31 | 1,042,954 | 4,434.3 | 5,844.4 | 4,434 | 8,281 | $16.24 | $16,313.57 | $13,080.30 | $665,149.00 | $377,805.00 | $54,269.68 | $67,366.22 | $67,366.22 | 31.6% |
| 31 | 1951 | 2 | 28 | 331,282 | 7,246.2 | 9,328.4 | 7,246 | 8,281 | $16.24 | $16,313.57 | $21,375.70 | $1,086,937.00 | $0.00 | $18,574.97 | $39,966.91 | $39,966.91 | 6.8% |
| 32 | 1951 | 3 | 31 | 0 | 0.0 | 0.0 | 0 | 8,281 | $16.24 | $16,313.57 | $0.00 | $0.00 | $0.00 | $0.00 | $16.24 | $16,313.57 | 0.0% |
| 33 | 1951 | 4 | 30 | 0 | 0.0 | 0.0 | 0 | 8,281 | $16.24 | $16,313.57 | $0.00 | $0.00 | $0.00 | $0.00 | $16.24 | $16,313.57 | 0.0% |
| 34 | 1951 | 5 | 31 | 115,111 | 4,796.3 | 6,249.3 | 4,796 | 7,278 | $16.24 | $14,337.66 | $14,148.20 | $719,445.00 | $0.00 | $6,454.29 | $20,618.73 | $20,618.73 | 3.2% |
| 35 | 1951 | 6 | 30 | 450,068 | 6,336.7 | 8,327.4 | 6,337 | 7,278 | $16.24 | $14,337.66 | $18,694.15 | $950,509.00 | $0.00 | $25,235.32 | $43,945.71 | $43,945.71 | 9.9% |
| 36 | 1951 | 7 | 31 | 1,246,917 | 7,946.1 | 10,068.4 | 7,946 | 7,946 | $16.24 | $15,653.62 | $23,440.70 | $1,191,915.00 | $55,002.00 | $69,301.91 | $92,758.85 | $92,758.85 | 21.1% |
| 37 | 1951 | 8 | 31 | 0 | 0.0 | 0.0 | 0 | 7,946 | $16.24 | $15,653.62 | $0.00 | $0.00 | $0.00 | $0.00 | $16.24 | $15,653.62 | 0.0% |
| 38 | 1951 | 9 | 30 | 107,615 | 4,483.9 | 5,900.4 | 4,484 | 7,946 | $16.24 | $15,653.62 | $13,227.80 | $672,591.00 | $0.00 | $6,033.95 | $19,277.99 | $19,277.99 | 3.3% |
| 39 | 1951 | 10 | 31 | 0 | 0.0 | 0.0 | 0 | 7,946 | $16.24 | $15,653.62 | $0.00 | $0.00 | $0.00 | $0.00 | $16.24 | $15,653.62 | 0.0% |
| 40 | 1951 | 11 | 30 | 0 | 0.0 | 0.0 | 0 | 7,946 | $16.24 | $15,653.62 | $0.00 | $0.00 | $0.00 | $0.00 | $16.24 | $15,653.62 | 0.0% |
| 41 | 1951 | 12 | 31 | 0 | 0.0 | 0.0 | 0 | 7,946 | $16.24 | $15,653.62 | $0.00 | $0.00 | $0.00 | $0.00 | $16.24 | $15,653.62 | 0.0% |
| 42 | 1952 | 1 | 31 | 0 | 0.0 | 0.0 | 0 | 7,946 | $16.24 | $15,653.62 | $0.00 | $0.00 | $0.00 | $0.00 | $16.24 | $15,653.62 | 0.0% |
| 43 | 1952 | 2 | 29 | 0 | 0.0 | 0.0 | 0 | 7,946 | $16.24 | $15,653.62 | $0.00 | $0.00 | $0.00 | $0.00 | $16.24 | $15,653.62 | 0.0% |
| 44 | 1952 | 3 | 31 | 824,856 | 6,631.1 | 8,656.3 | 6,631 | 7,946 | $16.24 | $15,653.62 | $19,561.45 | $994,670.00 | $0.00 | $46,249.67 | $65,827.36 | $65,827.36 | 16.7% |
| 45 | 1952 | 4 | 30 | 902,106 | 7,248.9 | 9,331.2 | 7,249 | 7,946 | $16.24 | $15,653.62 | $21,384.55 | $1,087,335.00 | $0.00 | $50,581.07 | $71,981.86 | $71,981.86 | 17.3% |
| 46 | 1952 | 5 | 31 | 0 | 0.0 | 0.0 | 0 | 7,946 | $16.24 | $15,653.62 | $0.00 | $0.00 | $0.00 | $0.00 | $16.24 | $15,653.62 | 0.0% |
| 47 | 1952 | 6 | 30 | 0 | 0.0 | 0.0 | 0 | 7,946 | $16.24 | $15,653.62 | $0.00 | $0.00 | $0.00 | $0.00 | $16.24 | $15,653.62 | 0.0% |
| 48 | 1952 | 7 | 31 | 0 | 0.0 | 0.0 | 0 | 7,249 | $16.24 | $14,280.53 | $0.00 | $0.00 | $0.00 | $0.00 | $16.24 | $14,280.53 | 0.0% |
| 49 | 1952 | 8 | 31 | 0 | 0.0 | 0.0 | 0 | 7,249 | $16.24 | $14,280.53 | $0.00 | $0.00 | $0.00 | $0.00 | $16.24 | $14,280.53 | 0.0% |
| 50 | 1952 | 9 | 30 | 0 | 0.0 | 0.0 | 0 | 7,249 | $16.24 | $14,280.53 | $0.00 | $0.00 | $0.00 | $0.00 | $16.24 | $14,280.53 | 0.0% |
| 51 | 1952 | 10 | 31 | 0 | 0.0 | 0.0 | 0 | 7,249 | $16.24 | $14,280.53 | $0.00 | $0.00 | $0.00 | $0.00 | $16.24 | $14,280.53 | 0.0% |
| 52 | 1952 | 11 | 30 | 0 | 0.0 | 0.0 | 0 | 7,249 | $16.24 | $14,280.53 | $0.00 | $0.00 | $0.00 | $0.00 | $16.24 | $14,280.53 | 0.0% |
| 53 | 1952 | 12 | 31 | 0 | 0.0 | 0.0 | 0 | 7,249 | $16.24 | $14,280.53 | $0.00 | $0.00 | $0.00 | $0.00 | $16.24 | $14,280.53 | 0.0% |
| 54 | 1953 | 1 | 31 | 0 | 0.0 | 0.0 | 0 | 7,249 | $16.24 | $14,280.53 | $0.00 | $0.00 | $0.00 | $0.00 | $16.24 | $14,280.53 | 0.0% |
| 55 | 1953 | 2 | 28 | 0 | 0.0 | 0.0 | 0 | 7,249 | $16.24 | $14,280.53 | $0.00 | $0.00 | $0.00 | $0.00 | $16.24 | $14,280.53 | 0.0% |
| 56 | 1953 | 3 | 31 | 1,224,297 | 6,875.2 | 8,925.4 | 6,875 | 7,249 | $16.24 | $14,280.53 | $20,281.25 | $1,031,279.00 | $193,018.00 | $66,496.11 | $86,793.60 | $86,793.60 | 23.9% |
| 57 | 1953 | 4 | 30 | 255,865 | 6,226.7 | 8,203.2 | 6,227 | 6,875 | $16.24 | $13,543.75 | $18,369.65 | $934,005.00 | $0.00 | $14,346.33 | $32,732.22 | $32,732.22 | 5.7% |
| 58 | 1953 | 5 | 31 | 3,060,576 | 6,980.1 | 9,040.1 | 6,980 | 6,980 | $16.24 | $13,750.60 | $20,591.00 | $1,047,013.00 | $2,013,563.00 | $149,175.40 | $169,782.64 | $169,782.64 | 58.9% |
| 59 | 1953 | 6 | 30 | 0 | 0.0 | 0.0 | 0 | 6,980 | $16.24 | $13,750.60 | $0.00 | $0.00 | $0.00 | $0.00 | $16.24 | $13,750.60 | 0.0% |
| 60 | 1953 | 7 | 31 | 0 | 0.0 | 0.0 | 0 | 6,980 | $16.24 | $13,750.60 | $0.00 | $0.00 | $0.00 | $0.00 | $16.24 | $13,750.60 | 0.0% |
| 61 | 1953 | 8 | 31 | 0 | 0.0 | 0.0 | 0 | 6,980 | $16.24 | $13,750.60 | $0.00 | $0.00 | $0.00 | $0.00 | $16.24 | $13,750.60 | 0.0% |

Little Bayou Meto
Flood Control Pumping Plant
3000-cfs (2 4000-hp)



| | A | B | C | D | E | F | G | H | I | J | K | L | M | N | O | P | Q |
|---|---|---|---|---|---|---|---|---|---|---|---|---|---|---|---|---|---|
| 1 | | | | | | | | | | Minimum | | | | | | | |
| 2 | | | | | | | | | | Monthly | Billing | | | | | | |
| 3 | | | | Metered | | | Billing | Ratchet | Customer | Demand | Demand | Incremental Energy | | Energy | | | Monthly |
| 4 | Period-of-Record | | | Energy | Demands | | Demand | Demand | Charge | Charge | Charge | Block 1 | Block 2 | Charge | Subtotal Bill | Total Bill | Load |
| 5 | YEAR | MO | DAYS | kWh | kWD | kVAD | kWD | kWD | $16.24 | $1.97 | $2.95 | $0.05607 | $0.04493 | kWh | | | Factor |
| 62 | 1953 | 9 | 30 | 0 | 0.0 | 0.0 | 0 | 6,980 | $16.24 | $13,750.60 | $0.00 | $0.00 | $0.00 | $0.00 | $16.24 | $13,750.60 | 0.0% |
| 63 | 1953 | 10 | 31 | 0 | 0.0 | 0.0 | 0 | 6,980 | $16.24 | $13,750.60 | $0.00 | $0.00 | $0.00 | $0.00 | $16.24 | $13,750.60 | 0.0% |
| 64 | 1953 | 11 | 30 | 0 | 0.0 | 0.0 | 0 | 6,980 | $16.24 | $13,750.60 | $0.00 | $0.00 | $0.00 | $0.00 | $16.24 | $13,750.60 | 0.0% |
| 65 | 1953 | 12 | 31 | 0 | 0.0 | 0.0 | 0 | 6,980 | $16.24 | $13,750.60 | $0.00 | $0.00 | $0.00 | $0.00 | $16.24 | $13,750.60 | 0.0% |
| 66 | 1954 | 1 | 31 | 1,362,225 | 6,208.1 | 8,182.1 | 6,208 | 6,980 | $16.24 | $13,750.60 | $18,313.60 | $931,209.00 | $431,016.00 | $71,578.44 | $89,908.28 | $89,908.28 | 29.5% |
| 67 | 1954 | 2 | 28 | 0 | 0.0 | 0.0 | 0 | 6,980 | $16.24 | $13,750.60 | $0.00 | $0.00 | $0.00 | $0.00 | $16.24 | $13,750.60 | 0.0% |
| 68 | 1954 | 3 | 31 | 0 | 0.0 | 0.0 | 0 | 6,980 | $16.24 | $13,750.60 | $0.00 | $0.00 | $0.00 | $0.00 | $16.24 | $13,750.60 | 0.0% |
| 69 | 1954 | 4 | 30 | 0 | 0.0 | 0.0 | 0 | 6,980 | $16.24 | $13,750.60 | $0.00 | $0.00 | $0.00 | $0.00 | $16.24 | $13,750.60 | 0.0% |
| 70 | 1954 | 5 | 31 | 477,692 | 6,891.5 | 8,943.3 | 6,892 | 6,892 | $16.24 | $13,577.24 | $20,331.40 | $1,033,729.00 | $0.00 | $26,784.19 | $47,131.83 | $47,131.83 | 9.3% |
| 71 | 1954 | 6 | 30 | 0 | 0.0 | 0.0 | 0 | 6,892 | $16.24 | $13,577.24 | $0.00 | $0.00 | $0.00 | $0.00 | $16.24 | $13,577.24 | 0.0% |
| 72 | 1954 | 7 | 31 | 0 | 0.0 | 0.0 | 0 | 6,892 | $16.24 | $13,577.24 | $0.00 | $0.00 | $0.00 | $0.00 | $16.24 | $13,577.24 | 0.0% |
| 73 | 1954 | 8 | 31 | 0 | 0.0 | 0.0 | 0 | 6,892 | $16.24 | $13,577.24 | $0.00 | $0.00 | $0.00 | $0.00 | $16.24 | $13,577.24 | 0.0% |
| 74 | 1954 | 9 | 30 | 0 | 0.0 | 0.0 | 0 | 6,892 | $16.24 | $13,577.24 | $0.00 | $0.00 | $0.00 | $0.00 | $16.24 | $13,577.24 | 0.0% |
| 75 | 1954 | 10 | 31 | 0 | 0.0 | 0.0 | 0 | 6,892 | $16.24 | $13,577.24 | $0.00 | $0.00 | $0.00 | $0.00 | $16.24 | $13,577.24 | 0.0% |
| 76 | 1954 | 11 | 30 | 0 | 0.0 | 0.0 | 0 | 6,892 | $16.24 | $13,577.24 | $0.00 | $0.00 | $0.00 | $0.00 | $16.24 | $13,577.24 | 0.0% |
| 77 | 1954 | 12 | 31 | 0 | 0.0 | 0.0 | 0 | 6,892 | $16.24 | $13,577.24 | $0.00 | $0.00 | $0.00 | $0.00 | $16.24 | $13,577.24 | 0.0% |
| 78 | 1955 | 1 | 31 | 0 | 0.0 | 0.0 | 0 | 6,892 | $16.24 | $13,577.24 | $0.00 | $0.00 | $0.00 | $0.00 | $16.24 | $13,577.24 | 0.0% |
| 79 | 1955 | 2 | 28 | 0 | 0.0 | 0.0 | 0 | 6,892 | $16.24 | $13,577.24 | $0.00 | $0.00 | $0.00 | $0.00 | $16.24 | $13,577.24 | 0.0% |
| 80 | 1955 | 3 | 31 | 854,603 | 6,284.3 | 8,268.3 | 6,284 | 6,892 | $16.24 | $13,577.24 | $18,537.80 | $942,643.00 | $0.00 | $47,917.58 | $66,471.62 | $66,471.62 | 18.3% |
| 81 | 1955 | 4 | 30 | 0 | 0.0 | 0.0 | 0 | 6,892 | $16.24 | $13,577.24 | $0.00 | $0.00 | $0.00 | $0.00 | $16.24 | $13,577.24 | 0.0% |
| 82 | 1955 | 5 | 31 | 0 | 0.0 | 0.0 | 0 | 6,284 | $16.24 | $12,379.48 | $0.00 | $0.00 | $0.00 | $0.00 | $16.24 | $12,379.48 | 0.0% |
| 83 | 1955 | 6 | 30 | 0 | 0.0 | 0.0 | 0 | 6,284 | $16.24 | $12,379.48 | $0.00 | $0.00 | $0.00 | $0.00 | $16.24 | $12,379.48 | 0.0% |
| 84 | 1955 | 7 | 31 | 0 | 0.0 | 0.0 | 0 | 6,284 | $16.24 | $12,379.48 | $0.00 | $0.00 | $0.00 | $0.00 | $16.24 | $12,379.48 | 0.0% |
| 85 | 1955 | 8 | 31 | 0 | 0.0 | 0.0 | 0 | 6,284 | $16.24 | $12,379.48 | $0.00 | $0.00 | $0.00 | $0.00 | $16.24 | $12,379.48 | 0.0% |
| 86 | 1955 | 9 | 30 | 0 | 0.0 | 0.0 | 0 | 6,284 | $16.24 | $12,379.48 | $0.00 | $0.00 | $0.00 | $0.00 | $16.24 | $12,379.48 | 0.0% |
| 87 | 1955 | 10 | 31 | 0 | 0.0 | 0.0 | 0 | 6,284 | $16.24 | $12,379.48 | $0.00 | $0.00 | $0.00 | $0.00 | $16.24 | $12,379.48 | 0.0% |
| 88 | 1955 | 11 | 30 | 0 | 0.0 | 0.0 | 0 | 6,284 | $16.24 | $12,379.48 | $0.00 | $0.00 | $0.00 | $0.00 | $16.24 | $12,379.48 | 0.0% |
| 89 | 1955 | 12 | 31 | 0 | 0.0 | 0.0 | 0 | 6,284 | $16.24 | $12,379.48 | $0.00 | $0.00 | $0.00 | $0.00 | $16.24 | $12,379.48 | 0.0% |
| 90 | 1956 | 1 | 31 | 0 | 0.0 | 0.0 | 0 | 6,284 | $16.24 | $12,379.48 | $0.00 | $0.00 | $0.00 | $0.00 | $16.24 | $12,379.48 | 0.0% |
| 91 | 1956 | 2 | 29 | 936,530 | 1,773.7 | 2,337.7 | 1,774 | 6,284 | $16.24 | $12,379.48 | $5,233.30 | $266,060.00 | $670,470.00 | $45,042.20 | $50,291.74 | $50,291.74 | 75.9% |
| 92 | 1956 | 3 | 31 | 127,709 | 1,773.7 | 2,337.7 | 1,774 | 1,774 | $16.24 | $3,494.78 | $5,233.30 | $266,060.00 | $0.00 | $7,160.62 | $12,410.16 | $12,410.16 | 9.7% |
| 93 | 1956 | 4 | 30 | 0 | 0.0 | 0.0 | 0 | 1,774 | $16.24 | $3,494.78 | $0.00 | $0.00 | $0.00 | $0.00 | $16.24 | $3,494.78 | 0.0% |
| 94 | 1956 | 5 | 31 | 0 | 0.0 | 0.0 | 0 | 1,774 | $16.24 | $3,494.78 | $0.00 | $0.00 | $0.00 | $0.00 | $16.24 | $3,494.78 | 0.0% |
| 95 | 1956 | 6 | 30 | 0 | 0.0 | 0.0 | 0 | 1,774 | $16.24 | $3,494.78 | $0.00 | $0.00 | $0.00 | $0.00 | $16.24 | $3,494.78 | 0.0% |
| 96 | 1956 | 7 | 31 | 0 | 0.0 | 0.0 | 0 | 1,774 | $16.24 | $3,494.78 | $0.00 | $0.00 | $0.00 | $0.00 | $16.24 | $3,494.78 | 0.0% |
| 97 | 1956 | 8 | 31 | 0 | 0.0 | 0.0 | 0 | 1,774 | $16.24 | $3,494.78 | $0.00 | $0.00 | $0.00 | $0.00 | $16.24 | $3,494.78 | 0.0% |
| 98 | 1956 | 9 | 30 | 0 | 0.0 | 0.0 | 0 | 1,774 | $16.24 | $3,494.78 | $0.00 | $0.00 | $0.00 | $0.00 | $16.24 | $3,494.78 | 0.0% |
| 99 | 1956 | 10 | 31 | 0 | 0.0 | 0.0 | 0 | 1,774 | $16.24 | $3,494.78 | $0.00 | $0.00 | $0.00 | $0.00 | $16.24 | $3,494.78 | 0.0% |
| 100 | 1956 | 11 | 30 | 0 | 0.0 | 0.0 | 0 | 1,774 | $16.24 | $3,494.78 | $0.00 | $0.00 | $0.00 | $0.00 | $16.24 | $3,494.78 | 0.0% |
| 101 | 1956 | 12 | 31 | 0 | 0.0 | 0.0 | 0 | 1,774 | $16.24 | $3,494.78 | $0.00 | $0.00 | $0.00 | $0.00 | $16.24 | $3,494.78 | 0.0% |
| 102 | 1957 | 1 | 31 | 0 | 0.0 | 0.0 | 0 | 1,774 | $16.24 | $3,494.78 | $0.00 | $0.00 | $0.00 | $0.00 | $16.24 | $3,494.78 | 0.0% |
| 103 | 1957 | 2 | 28 | 1,724,066 | 6,208.1 | 8,182.1 | 6,208 | 6,208 | $16.24 | $12,229.76 | $18,313.60 | $931,209.00 | $792,857.00 | $87,835.95 | $106,165.79 | $106,165.79 | 41.3% |
| 104 | 1957 | 3 | 31 | 0 | 0.0 | 0.0 | 0 | 6,208 | $16.24 | $12,229.76 | $0.00 | $0.00 | $0.00 | $0.00 | $16.24 | $12,229.76 | 0.0% |
| 105 | 1957 | 4 | 30 | 2,288,704 | 8,454.4 | 10,589.8 | 8,454 | 8,454 | $16.24 | $16,654.38 | $24,939.30 | $1,268,161.00 | $1,020,543.00 | $116,958.78 | $141,914.32 | $141,914.32 | 37.6% |
| 106 | 1957 | 5 | 31 | 2,372,983 | 8,581.3 | 10,717.8 | 8,581 | 8,581 | $16.24 | $16,904.57 | $25,313.95 | $1,287,190.00 | $1,085,793.00 | $120,957.42 | $146,287.61 | $146,287.61 | 37.2% |
| 107 | 1957 | 6 | 30 | 2,616,748 | 8,818.1 | 10,954.7 | 8,818 | 8,818 | $16.24 | $17,371.46 | $26,013.10 | $1,322,721.00 | $1,294,027.00 | $132,305.60 | $158,334.94 | $158,334.94 | 41.2% |
| 108 | 1957 | 7 | 31 | 1,099,282 | 8,444.5 | 10,579.7 | 8,444 | 8,818 | $16.24 | $17,371.46 | $24,909.80 | $1,266,670.00 | $0.00 | $61,636.76 | $86,562.80 | $86,562.80 | 17.5% |
| 109 | 1957 | 8 | 31 | 0 | 0.0 | 0.0 | 0 | 8,818 | $16.24 | $17,371.46 | $0.00 | $0.00 | $0.00 | $0.00 | $16.24 | $17,371.46 | 0.0% |
| 110 | 1957 | 9 | 30 | 0 | 0.0 | 0.0 | 0 | 8,818 | $16.24 | $17,371.46 | $0.00 | $0.00 | $0.00 | $0.00 | $16.24 | $17,371.46 | 0.0% |
| 111 | 1957 | 10 | 31 | 0 | 0.0 | 0.0 | 0 | 8,818 | $16.24 | $17,371.46 | $0.00 | $0.00 | $0.00 | $0.00 | $16.24 | $17,371.46 | 0.0% |
| 112 | 1957 | 11 | 30 | 0 | 0.0 | 0.0 | 0 | 8,818 | $16.24 | $17,371.46 | $0.00 | $0.00 | $0.00 | $0.00 | $16.24 | $17,371.46 | 0.0% |
| 113 | 1957 | 12 | 31 | 0 | 0.0 | 0.0 | 0 | 8,818 | $16.24 | $17,371.46 | $0.00 | $0.00 | $0.00 | $0.00 | $16.24 | $17,371.46 | 0.0% |
| 114 | 1958 | 1 | 31 | 0 | 0.0 | 0.0 | 0 | 8,818 | $16.24 | $17,371.46 | $0.00 | $0.00 | $0.00 | $0.00 | $16.24 | $17,371.46 | 0.0% |
| 115 | 1958 | 2 | 28 | 0 | 0.0 | 0.0 | 0 | 8,818 | $16.24 | $17,371.46 | $0.00 | $0.00 | $0.00 | $0.00 | $16.24 | $17,371.46 | 0.0% |
| 116 | 1958 | 3 | 31 | 298,068 | 6,211.4 | 8,185.9 | 6,211 | 8,818 | $16.24 | $17,371.46 | $18,322.45 | $931,717.00 | $0.00 | $16,712.68 | $35,051.37 | $35,051.37 | 6.4% |
| 117 | 1958 | 4 | 30 | 532,119 | 6,208.1 | 8,182.1 | 6,208 | 8,818 | $16.24 | $17,371.46 | $18,313.60 | $931,209.00 | $0.00 | $29,835.92 | $48,165.76 | $48,165.76 | 11.9% |

Little Bayou Meto
Flood Control Pumping Plant
3000-cfs (2 4000-hp)



| | A | B | C | D | E | F | G | H | I | J | K | L | M | N | O | P | Q |
|---|---|---|---|---|---|---|---|---|---|---|---|---|---|---|---|---|---|
| 1 | | | | | | | | | | Minimum | | | | | | | |
| 2 | | | | | | | | | | Monthly | Billing | | | | | | |
| 3 | | | | Metered | | | Billing | Ratchet | Customer | Demand | Demand | Incremental Energy | | Energy | | | Monthly |
| 4 | Period-of-Record | | | Energy | Demands | | Demand | Demand | Charge | Charge | Charge | Block 1 | Block 2 | Charge | Subtotal Bill | Total Bill | Load |
| 5 | YEAR | MO | DAYS | kWh | kWD | kVAD | kWD | kWD | $16.24 | $1.97 | $2.95 | $0.05607 | $0.04493 | kWh | | | Factor |
| 118 | 1958 | 5 | 31 | 2,698,387 | 6,718.1 | 8,752.6 | 6,718 | 8,818 | $16.24 | $17,371.46 | $19,818.10 | $1,007,715.00 | $1,690,672.00 | $132,464.47 | $152,298.81 | $152,298.81 | 54.0% |
| 119 | 1958 | 6 | 30 | 153,946 | 6,414.4 | 8,414.6 | 6,414 | 8,444 | $16.24 | $16,634.68 | $18,921.30 | $962,163.00 | $0.00 | $8,631.76 | $27,569.30 | $27,569.30 | 3.3% |
| 120 | 1958 | 7 | 31 | 662,381 | 6,867.0 | 8,916.5 | 6,867 | 6,867 | $16.24 | $13,527.99 | $20,257.65 | $1,030,054.00 | $0.00 | $37,139.71 | $57,413.60 | $57,413.60 | 13.0% |
| 121 | 1958 | 8 | 31 | 0 | 0.0 | 0.0 | 0 | 6,867 | $16.24 | $13,527.99 | $0.00 | $0.00 | $0.00 | $0.00 | $16.24 | $13,527.99 | 0.0% |
| 122 | 1958 | 9 | 30 | 0 | 0.0 | 0.0 | 0 | 6,867 | $16.24 | $13,527.99 | $0.00 | $0.00 | $0.00 | $0.00 | $16.24 | $13,527.99 | 0.0% |
| 123 | 1958 | 10 | 31 | 0 | 0.0 | 0.0 | 0 | 6,867 | $16.24 | $13,527.99 | $0.00 | $0.00 | $0.00 | $0.00 | $16.24 | $13,527.99 | 0.0% |
| 124 | 1958 | 11 | 30 | 0 | 0.0 | 0.0 | 0 | 6,867 | $16.24 | $13,527.99 | $0.00 | $0.00 | $0.00 | $0.00 | $16.24 | $13,527.99 | 0.0% |
| 125 | 1958 | 12 | 31 | 0 | 0.0 | 0.0 | 0 | 6,867 | $16.24 | $13,527.99 | $0.00 | $0.00 | $0.00 | $0.00 | $16.24 | $13,527.99 | 0.0% |
| 126 | 1959 | 1 | 31 | 0 | 0.0 | 0.0 | 0 | 6,867 | $16.24 | $13,527.99 | $0.00 | $0.00 | $0.00 | $0.00 | $16.24 | $13,527.99 | 0.0% |
| 127 | 1959 | 2 | 28 | 0 | 0.0 | 0.0 | 0 | 6,867 | $16.24 | $13,527.99 | $0.00 | $0.00 | $0.00 | $0.00 | $16.24 | $13,527.99 | 0.0% |
| 128 | 1959 | 3 | 31 | 0 | 0.0 | 0.0 | 0 | 6,867 | $16.24 | $13,527.99 | $0.00 | $0.00 | $0.00 | $0.00 | $16.24 | $13,527.99 | 0.0% |
| 129 | 1959 | 4 | 30 | 0 | 0.0 | 0.0 | 0 | 6,867 | $16.24 | $13,527.99 | $0.00 | $0.00 | $0.00 | $0.00 | $16.24 | $13,527.99 | 0.0% |
| 130 | 1959 | 5 | 31 | 0 | 0.0 | 0.0 | 0 | 6,867 | $16.24 | $13,527.99 | $0.00 | $0.00 | $0.00 | $0.00 | $16.24 | $13,527.99 | 0.0% |
| 131 | 1959 | 6 | 30 | 0 | 0.0 | 0.0 | 0 | 6,867 | $16.24 | $13,527.99 | $0.00 | $0.00 | $0.00 | $0.00 | $16.24 | $13,527.99 | 0.0% |
| 132 | 1959 | 7 | 31 | 176,561 | 1,915.7 | 2,496.6 | 1,916 | 1,916 | $16.24 | $3,774.52 | $5,652.20 | $287,356.00 | $0.00 | $9,899.78 | $15,568.22 | $15,568.22 | 12.4% |
| 133 | 1959 | 8 | 31 | 197,342 | 6,208.1 | 8,182.1 | 6,208 | 6,208 | $16.24 | $12,229.76 | $18,313.60 | $931,209.00 | $0.00 | $11,064.95 | $29,394.79 | $29,394.79 | 4.3% |
| 134 | 1959 | 9 | 30 | 0 | 0.0 | 0.0 | 0 | 6,208 | $16.24 | $12,229.76 | $0.00 | $0.00 | $0.00 | $0.00 | $16.24 | $12,229.76 | 0.0% |
| 135 | 1959 | 10 | 31 | 357,836 | 6,014.0 | 7,538.9 | 6,014 | 6,208 | $16.24 | $12,229.76 | $17,741.30 | $902,102.00 | $0.00 | $20,063.88 | $37,821.42 | $37,821.42 | 8.0% |
| 136 | 1959 | 11 | 30 | 0 | 0.0 | 0.0 | 0 | 6,208 | $16.24 | $12,229.76 | $0.00 | $0.00 | $0.00 | $0.00 | $16.24 | $12,229.76 | 0.0% |
| 137 | 1959 | 12 | 31 | 0 | 0.0 | 0.0 | 0 | 6,208 | $16.24 | $12,229.76 | $0.00 | $0.00 | $0.00 | $0.00 | $16.24 | $12,229.76 | 0.0% |
| 138 | 1960 | 1 | 31 | 0 | 0.0 | 0.0 | 0 | 6,208 | $16.24 | $12,229.76 | $0.00 | $0.00 | $0.00 | $0.00 | $16.24 | $12,229.76 | 0.0% |
| 139 | 1960 | 2 | 29 | 0 | 0.0 | 0.0 | 0 | 6,208 | $16.24 | $12,229.76 | $0.00 | $0.00 | $0.00 | $0.00 | $16.24 | $12,229.76 | 0.0% |
| 140 | 1960 | 3 | 31 | 0 | 0.0 | 0.0 | 0 | 6,208 | $16.24 | $12,229.76 | $0.00 | $0.00 | $0.00 | $0.00 | $16.24 | $12,229.76 | 0.0% |
| 141 | 1960 | 4 | 30 | 0 | 0.0 | 0.0 | 0 | 6,208 | $16.24 | $12,229.76 | $0.00 | $0.00 | $0.00 | $0.00 | $16.24 | $12,229.76 | 0.0% |
| 142 | 1960 | 5 | 31 | 1,086,227 | 7,526.4 | 9,627.8 | 7,526 | 7,526 | $16.24 | $14,826.22 | $22,201.70 | $1,128,964.00 | $0.00 | $60,904.75 | $83,122.69 | $83,122.69 | 19.4% |
| 143 | 1960 | 6 | 30 | 127,709 | 1,773.7 | 2,337.7 | 1,774 | 7,526 | $16.24 | $14,826.22 | $5,233.30 | $266,060.00 | $0.00 | $7,160.62 | $12,410.16 | $14,826.22 | 10.0% |
| 144 | 1960 | 7 | 31 | 851,391 | 4,434.3 | 5,844.4 | 4,434 | 7,526 | $16.24 | $14,826.22 | $13,080.30 | $665,149.00 | $186,242.00 | $45,662.76 | $58,759.30 | $58,759.30 | 25.8% |
| 145 | 1960 | 8 | 31 | 0 | 0.0 | 0.0 | 0 | 7,526 | $16.24 | $14,826.22 | $0.00 | $0.00 | $0.00 | $0.00 | $16.24 | $14,826.22 | 0.0% |
| 146 | 1960 | 9 | 30 | 0 | 0.0 | 0.0 | 0 | 7,526 | $16.24 | $14,826.22 | $0.00 | $0.00 | $0.00 | $0.00 | $16.24 | $14,826.22 | 0.0% |
| 147 | 1960 | 10 | 31 | 0 | 0.0 | 0.0 | 0 | 7,526 | $16.24 | $14,826.22 | $0.00 | $0.00 | $0.00 | $0.00 | $16.24 | $14,826.22 | 0.0% |
| 148 | 1960 | 11 | 30 | 0 | 0.0 | 0.0 | 0 | 7,526 | $16.24 | $14,826.22 | $0.00 | $0.00 | $0.00 | $0.00 | $16.24 | $14,826.22 | 0.0% |
| 149 | 1960 | 12 | 31 | 0 | 0.0 | 0.0 | 0 | 7,526 | $16.24 | $14,826.22 | $0.00 | $0.00 | $0.00 | $0.00 | $16.24 | $14,826.22 | 0.0% |
| 150 | 1961 | 1 | 31 | 0 | 0.0 | 0.0 | 0 | 7,526 | $16.24 | $14,826.22 | $0.00 | $0.00 | $0.00 | $0.00 | $16.24 | $14,826.22 | 0.0% |
| 151 | 1961 | 2 | 28 | 0 | 0.0 | 0.0 | 0 | 7,526 | $16.24 | $14,826.22 | $0.00 | $0.00 | $0.00 | $0.00 | $16.24 | $14,826.22 | 0.0% |
| 152 | 1961 | 3 | 31 | 0 | 0.0 | 0.0 | 0 | 7,526 | $16.24 | $14,826.22 | $0.00 | $0.00 | $0.00 | $0.00 | $16.24 | $14,826.22 | 0.0% |
| 153 | 1961 | 4 | 30 | 1,857,973 | 6,901.2 | 8,953.9 | 6,901 | 7,526 | $16.24 | $14,826.22 | $20,357.95 | $1,035,181.00 | $822,792.00 | $95,010.64 | $115,384.83 | $115,384.83 | 37.4% |
| 154 | 1961 | 5 | 31 | 2,680,198 | 8,524.1 | 10,660.2 | 8,524 | 8,524 | $16.24 | $16,792.28 | $25,145.80 | $1,278,618.00 | $1,401,580.00 | $134,665.10 | $159,827.14 | $159,827.14 | 42.3% |
| 155 | 1961 | 6 | 30 | 0 | 0.0 | 0.0 | 0 | 8,524 | $16.24 | $16,792.28 | $0.00 | $0.00 | $0.00 | $0.00 | $16.24 | $16,792.28 | 0.0% |
| 156 | 1961 | 7 | 31 | 106,569 | 4,440.4 | 5,851.2 | 4,440 | 8,524 | $16.24 | $16,792.28 | $13,098.00 | $666,057.00 | $0.00 | $5,975.33 | $19,089.57 | $19,089.57 | 3.2% |
| 157 | 1961 | 8 | 31 | 0 | 0.0 | 0.0 | 0 | 8,524 | $16.24 | $16,792.28 | $0.00 | $0.00 | $0.00 | $0.00 | $16.24 | $16,792.28 | 0.0% |
| 158 | 1961 | 9 | 30 | 0 | 0.0 | 0.0 | 0 | 8,524 | $16.24 | $16,792.28 | $0.00 | $0.00 | $0.00 | $0.00 | $16.24 | $16,792.28 | 0.0% |
| 159 | 1961 | 10 | 31 | 0 | 0.0 | 0.0 | 0 | 8,524 | $16.24 | $16,792.28 | $0.00 | $0.00 | $0.00 | $0.00 | $16.24 | $16,792.28 | 0.0% |
| 160 | 1961 | 11 | 30 | 0 | 0.0 | 0.0 | 0 | 8,524 | $16.24 | $16,792.28 | $0.00 | $0.00 | $0.00 | $0.00 | $16.24 | $16,792.28 | 0.0% |
| 161 | 1961 | 12 | 31 | 1,064,238 | 4,434.3 | 5,844.4 | 4,434 | 8,524 | $16.24 | $16,792.28 | $13,080.30 | $665,149.00 | $399,089.00 | $55,225.97 | $68,322.51 | $68,322.51 | 32.3% |
| 162 | 1962 | 1 | 31 | 0 | 0.0 | 0.0 | 0 | 8,524 | $16.24 | $16,792.28 | $0.00 | $0.00 | $0.00 | $0.00 | $16.24 | $16,792.28 | 0.0% |
| 163 | 1962 | 2 | 28 | 0 | 0.0 | 0.0 | 0 | 8,524 | $16.24 | $16,792.28 | $0.00 | $0.00 | $0.00 | $0.00 | $16.24 | $16,792.28 | 0.0% |
| 164 | 1962 | 3 | 31 | 383,126 | 1,773.7 | 2,337.7 | 1,774 | 8,524 | $16.24 | $16,792.28 | $5,233.30 | $266,060.00 | $117,066.00 | $20,177.76 | $25,427.30 | $25,427.30 | 29.0% |
| 165 | 1962 | 4 | 30 | 0 | 0.0 | 0.0 | 0 | 8,524 | $16.24 | $16,792.28 | $0.00 | $0.00 | $0.00 | $0.00 | $16.24 | $16,792.28 | 0.0% |
| 166 | 1962 | 5 | 31 | 0 | 0.0 | 0.0 | 0 | 4,440 | $16.24 | $8,746.80 | $0.00 | $0.00 | $0.00 | $0.00 | $16.24 | $8,746.80 | 0.0% |
| 167 | 1962 | 6 | 30 | 0 | 0.0 | 0.0 | 0 | 4,440 | $16.24 | $8,746.80 | $0.00 | $0.00 | $0.00 | $0.00 | $16.24 | $8,746.80 | 0.0% |
| 168 | 1962 | 7 | 31 | 0 | 0.0 | 0.0 | 0 | 4,434 | $16.24 | $8,734.98 | $0.00 | $0.00 | $0.00 | $0.00 | $16.24 | $8,734.98 | 0.0% |
| 169 | 1962 | 8 | 31 | 0 | 0.0 | 0.0 | 0 | 4,434 | $16.24 | $8,734.98 | $0.00 | $0.00 | $0.00 | $0.00 | $16.24 | $8,734.98 | 0.0% |
| 170 | 1962 | 9 | 30 | 0 | 0.0 | 0.0 | 0 | 4,434 | $16.24 | $8,734.98 | $0.00 | $0.00 | $0.00 | $0.00 | $16.24 | $8,734.98 | 0.0% |
| 171 | 1962 | 10 | 31 | 0 | 0.0 | 0.0 | 0 | 4,434 | $16.24 | $8,734.98 | $0.00 | $0.00 | $0.00 | $0.00 | $16.24 | $8,734.98 | 0.0% |
| 172 | 1962 | 11 | 30 | 0 | 0.0 | 0.0 | 0 | 4,434 | $16.24 | $8,734.98 | $0.00 | $0.00 | $0.00 | $0.00 | $16.24 | $8,734.98 | 0.0% |
| 173 | 1962 | 12 | 31 | 0 | 0.0 | 0.0 | 0 | 1,774 | $16.24 | $3,494.78 | $0.00 | $0.00 | $0.00 | $0.00 | $16.24 | $3,494.78 | 0.0% |

Little Bayou Meto
Flood Control Pumping Plant
3000-cfs (2 4000-hp)



| | A | B | C | D | E | F | G | H | I | J | K | L | M | N | O | P | Q |
|---|---|---|---|---|---|---|---|---|---|---|---|---|---|---|---|---|---|
| 1 | | | | | | | | | | Minimum | | | | | | | |
| 2 | | | | | | | | | | Monthly | Billing | | | | | | |
| 3 | | | | Metered | | | Billing | Ratchet | Customer | Demand | Demand | Incremental Energy | | Energy | | | Monthly |
| 4 | Period-of-Record | | | Energy | Demands | | Demand | Demand | Charge | Charge | Charge | Block 1 | Block 2 | Charge | Subtotal Bill | Total Bill | Load |
| 5 | YEAR | MO | DAYS | kWh | kWD | kVAD | kWD | kWD | $16.24 | $1.97 | $2.95 | $0.05607 | $0.04493 | kWh | | | Factor |
| 174 | 1963 | 1 | 31 | 0 | 0.0 | 0.0 | 0 | 1,774 | $16.24 | $3,494.78 | $0.00 | $0.00 | $0.00 | $0.00 | $16.24 | $3,494.78 | 0.0% |
| 175 | 1963 | 2 | 28 | 0 | 0.0 | 0.0 | 0 | 1,774 | $16.24 | $3,494.78 | $0.00 | $0.00 | $0.00 | $0.00 | $16.24 | $3,494.78 | 0.0% |
| 176 | 1963 | 3 | 31 | 0 | 0.0 | 0.0 | 0 | 0 | $16.24 | $0.00 | $0.00 | $0.00 | $0.00 | $0.00 | $16.24 | $16.24 | 0.0% |
| 177 | 1963 | 4 | 30 | 0 | 0.0 | 0.0 | 0 | 0 | $16.24 | $0.00 | $0.00 | $0.00 | $0.00 | $0.00 | $16.24 | $16.24 | 0.0% |
| 178 | 1963 | 5 | 31 | 510,834 | 1,773.7 | 2,337.7 | 1,774 | 1,774 | $16.24 | $3,494.78 | $5,233.30 | $266,060.00 | $244,774.00 | $25,915.68 | $31,165.22 | $31,165.22 | 38.7% |
| 179 | 1963 | 6 | 30 | 0 | 0.0 | 0.0 | 0 | 1,774 | $16.24 | $3,494.78 | $0.00 | $0.00 | $0.00 | $0.00 | $16.24 | $3,494.78 | 0.0% |
| 180 | 1963 | 7 | 31 | 0 | 0.0 | 0.0 | 0 | 1,774 | $16.24 | $3,494.78 | $0.00 | $0.00 | $0.00 | $0.00 | $16.24 | $3,494.78 | 0.0% |
| 181 | 1963 | 8 | 31 | 0 | 0.0 | 0.0 | 0 | 1,774 | $16.24 | $3,494.78 | $0.00 | $0.00 | $0.00 | $0.00 | $16.24 | $3,494.78 | 0.0% |
| 182 | 1963 | 9 | 30 | 0 | 0.0 | 0.0 | 0 | 1,774 | $16.24 | $3,494.78 | $0.00 | $0.00 | $0.00 | $0.00 | $16.24 | $3,494.78 | 0.0% |
| 183 | 1963 | 10 | 31 | 0 | 0.0 | 0.0 | 0 | 1,774 | $16.24 | $3,494.78 | $0.00 | $0.00 | $0.00 | $0.00 | $16.24 | $3,494.78 | 0.0% |
| 184 | 1963 | 11 | 30 | 0 | 0.0 | 0.0 | 0 | 1,774 | $16.24 | $3,494.78 | $0.00 | $0.00 | $0.00 | $0.00 | $16.24 | $3,494.78 | 0.0% |
| 185 | 1963 | 12 | 31 | 0 | 0.0 | 0.0 | 0 | 1,774 | $16.24 | $3,494.78 | $0.00 | $0.00 | $0.00 | $0.00 | $16.24 | $3,494.78 | 0.0% |
| 186 | 1964 | 1 | 31 | 0 | 0.0 | 0.0 | 0 | 1,774 | $16.24 | $3,494.78 | $0.00 | $0.00 | $0.00 | $0.00 | $16.24 | $3,494.78 | 0.0% |
| 187 | 1964 | 2 | 29 | 0 | 0.0 | 0.0 | 0 | 1,774 | $16.24 | $3,494.78 | $0.00 | $0.00 | $0.00 | $0.00 | $16.24 | $3,494.78 | 0.0% |
| 188 | 1964 | 3 | 31 | 553,404 | 1,773.7 | 2,337.7 | 1,774 | 1,774 | $16.24 | $3,494.78 | $5,233.30 | $266,060.00 | $287,344.00 | $27,828.35 | $33,077.89 | $33,077.89 | 41.9% |
| 189 | 1964 | 4 | 30 | 2,000,768 | 6,208.1 | 8,182.1 | 6,208 | 6,208 | $16.24 | $12,229.76 | $18,313.60 | $931,209.00 | $1,069,559.00 | $100,268.17 | $118,598.01 | $118,598.01 | 44.8% |
| 190 | 1964 | 5 | 31 | 1,064,238 | 6,208.1 | 8,182.1 | 6,208 | 6,208 | $16.24 | $12,229.76 | $18,313.60 | $931,209.00 | $133,029.00 | $58,189.88 | $76,519.72 | $76,519.72 | 23.0% |
| 191 | 1964 | 6 | 30 | 0 | 0.0 | 0.0 | 0 | 6,208 | $16.24 | $12,229.76 | $0.00 | $0.00 | $0.00 | $0.00 | $16.24 | $12,229.76 | 0.0% |
| 192 | 1964 | 7 | 31 | 0 | 0.0 | 0.0 | 0 | 6,208 | $16.24 | $12,229.76 | $0.00 | $0.00 | $0.00 | $0.00 | $16.24 | $12,229.76 | 0.0% |
| 193 | 1964 | 8 | 31 | 0 | 0.0 | 0.0 | 0 | 6,208 | $16.24 | $12,229.76 | $0.00 | $0.00 | $0.00 | $0.00 | $16.24 | $12,229.76 | 0.0% |
| 194 | 1964 | 9 | 30 | 0 | 0.0 | 0.0 | 0 | 6,208 | $16.24 | $12,229.76 | $0.00 | $0.00 | $0.00 | $0.00 | $16.24 | $12,229.76 | 0.0% |
| 195 | 1964 | 10 | 31 | 0 | 0.0 | 0.0 | 0 | 6,208 | $16.24 | $12,229.76 | $0.00 | $0.00 | $0.00 | $0.00 | $16.24 | $12,229.76 | 0.0% |
| 196 | 1964 | 11 | 30 | 0 | 0.0 | 0.0 | 0 | 6,208 | $16.24 | $12,229.76 | $0.00 | $0.00 | $0.00 | $0.00 | $16.24 | $12,229.76 | 0.0% |
| 197 | 1964 | 12 | 31 | 723,682 | 1,773.7 | 2,337.7 | 1,774 | 6,208 | $16.24 | $12,229.76 | $5,233.30 | $266,060.00 | $457,622.00 | $35,478.94 | $40,728.48 | $40,728.48 | 54.8% |
| 198 | 1965 | 1 | 31 | 0 | 0.0 | 0.0 | 0 | 6,208 | $16.24 | $12,229.76 | $0.00 | $0.00 | $0.00 | $0.00 | $16.24 | $12,229.76 | 0.0% |
| 199 | 1965 | 2 | 28 | 1,064,238 | 4,434.3 | 5,844.4 | 4,434 | 6,208 | $16.24 | $12,229.76 | $13,080.30 | $665,149.00 | $399,089.00 | $55,225.97 | $68,322.51 | $68,322.51 | 35.7% |
| 200 | 1965 | 3 | 31 | 0 | 0.0 | 0.0 | 0 | 6,208 | $16.24 | $12,229.76 | $0.00 | $0.00 | $0.00 | $0.00 | $16.24 | $12,229.76 | 0.0% |
| 201 | 1965 | 4 | 30 | 153,095 | 6,379.0 | 8,374.9 | 6,379 | 6,379 | $16.24 | $12,566.63 | $18,818.05 | $956,845.00 | $0.00 | $8,584.05 | $27,418.34 | $27,418.34 | 3.3% |
| 202 | 1965 | 5 | 31 | 0 | 0.0 | 0.0 | 0 | 6,379 | $16.24 | $12,566.63 | $0.00 | $0.00 | $0.00 | $0.00 | $16.24 | $12,566.63 | 0.0% |
| 203 | 1965 | 6 | 30 | 0 | 0.0 | 0.0 | 0 | 6,379 | $16.24 | $12,566.63 | $0.00 | $0.00 | $0.00 | $0.00 | $16.24 | $12,566.63 | 0.0% |
| 204 | 1965 | 7 | 31 | 0 | 0.0 | 0.0 | 0 | 6,379 | $16.24 | $12,566.63 | $0.00 | $0.00 | $0.00 | $0.00 | $16.24 | $12,566.63 | 0.0% |
| 205 | 1965 | 8 | 31 | 0 | 0.0 | 0.0 | 0 | 6,379 | $16.24 | $12,566.63 | $0.00 | $0.00 | $0.00 | $0.00 | $16.24 | $12,566.63 | 0.0% |
| 206 | 1965 | 9 | 30 | 0 | 0.0 | 0.0 | 0 | 6,379 | $16.24 | $12,566.63 | $0.00 | $0.00 | $0.00 | $0.00 | $16.24 | $12,566.63 | 0.0% |
| 207 | 1965 | 10 | 31 | 0 | 0.0 | 0.0 | 0 | 6,379 | $16.24 | $12,566.63 | $0.00 | $0.00 | $0.00 | $0.00 | $16.24 | $12,566.63 | 0.0% |
| 208 | 1965 | 11 | 30 | 0 | 0.0 | 0.0 | 0 | 6,379 | $16.24 | $12,566.63 | $0.00 | $0.00 | $0.00 | $0.00 | $16.24 | $12,566.63 | 0.0% |
| 209 | 1965 | 12 | 31 | 0 | 0.0 | 0.0 | 0 | 6,379 | $16.24 | $12,566.63 | $0.00 | $0.00 | $0.00 | $0.00 | $16.24 | $12,566.63 | 0.0% |
| 210 | 1966 | 1 | 31 | 0 | 0.0 | 0.0 | 0 | 6,379 | $16.24 | $12,566.63 | $0.00 | $0.00 | $0.00 | $0.00 | $16.24 | $12,566.63 | 0.0% |
| 211 | 1966 | 2 | 28 | 1,149,377 | 4,434.3 | 5,844.4 | 4,434 | 6,379 | $16.24 | $12,566.63 | $13,080.30 | $665,149.00 | $484,228.00 | $59,051.27 | $72,147.81 | $72,147.81 | 38.6% |
| 212 | 1966 | 3 | 31 | 0 | 0.0 | 0.0 | 0 | 6,379 | $16.24 | $12,566.63 | $0.00 | $0.00 | $0.00 | $0.00 | $16.24 | $12,566.63 | 0.0% |
| 213 | 1966 | 4 | 30 | 452,581 | 6,441.4 | 8,444.9 | 6,441 | 6,441 | $16.24 | $12,688.77 | $19,000.95 | $966,212.00 | $0.00 | $25,376.20 | $44,393.39 | $44,393.39 | 9.8% |
| 214 | 1966 | 5 | 31 | 1,255,801 | 6,208.1 | 8,182.1 | 6,208 | 6,441 | $16.24 | $12,688.77 | $18,313.60 | $931,209.00 | $324,592.00 | $66,796.81 | $85,126.65 | $85,126.65 | 27.2% |
| 215 | 1966 | 6 | 30 | 0 | 0.0 | 0.0 | 0 | 6,441 | $16.24 | $12,688.77 | $0.00 | $0.00 | $0.00 | $0.00 | $16.24 | $12,688.77 | 0.0% |
| 216 | 1966 | 7 | 31 | 0 | 0.0 | 0.0 | 0 | 6,441 | $16.24 | $12,688.77 | $0.00 | $0.00 | $0.00 | $0.00 | $16.24 | $12,688.77 | 0.0% |
| 217 | 1966 | 8 | 31 | 0 | 0.0 | 0.0 | 0 | 6,441 | $16.24 | $12,688.77 | $0.00 | $0.00 | $0.00 | $0.00 | $16.24 | $12,688.77 | 0.0% |
| 218 | 1966 | 9 | 30 | 0 | 0.0 | 0.0 | 0 | 6,441 | $16.24 | $12,688.77 | $0.00 | $0.00 | $0.00 | $0.00 | $16.24 | $12,688.77 | 0.0% |
| 219 | 1966 | 10 | 31 | 0 | 0.0 | 0.0 | 0 | 6,441 | $16.24 | $12,688.77 | $0.00 | $0.00 | $0.00 | $0.00 | $16.24 | $12,688.77 | 0.0% |
| 220 | 1966 | 11 | 30 | 0 | 0.0 | 0.0 | 0 | 6,441 | $16.24 | $12,688.77 | $0.00 | $0.00 | $0.00 | $0.00 | $16.24 | $12,688.77 | 0.0% |
| 221 | 1966 | 12 | 31 | 0 | 0.0 | 0.0 | 0 | 6,441 | $16.24 | $12,688.77 | $0.00 | $0.00 | $0.00 | $0.00 | $16.24 | $12,688.77 | 0.0% |
| 222 | 1967 | 1 | 31 | 0 | 0.0 | 0.0 | 0 | 6,441 | $16.24 | $12,688.77 | $0.00 | $0.00 | $0.00 | $0.00 | $16.24 | $12,688.77 | 0.0% |
| 223 | 1967 | 2 | 28 | 0 | 0.0 | 0.0 | 0 | 6,441 | $16.24 | $12,688.77 | $0.00 | $0.00 | $0.00 | $0.00 | $16.24 | $12,688.77 | 0.0% |
| 224 | 1967 | 3 | 31 | 0 | 0.0 | 0.0 | 0 | 6,441 | $16.24 | $12,688.77 | $0.00 | $0.00 | $0.00 | $0.00 | $16.24 | $12,688.77 | 0.0% |
| 225 | 1967 | 4 | 30 | 85,139 | 1,773.7 | 2,337.7 | 1,774 | 6,208 | $16.24 | $12,229.76 | $5,233.30 | $266,060.00 | $0.00 | $4,773.75 | $10,023.29 | $12,229.76 | 6.7% |
| 226 | 1967 | 5 | 31 | 893,960 | 1,773.7 | 2,337.7 | 1,774 | 1,774 | $16.24 | $3,494.78 | $5,233.30 | $266,060.00 | $627,900.00 | $43,129.53 | $48,379.07 | $48,379.07 | 67.7% |
| 227 | 1967 | 6 | 30 | 0 | 0.0 | 0.0 | 0 | 1,774 | $16.24 | $3,494.78 | $0.00 | $0.00 | $0.00 | $0.00 | $16.24 | $3,494.78 | 0.0% |
| 228 | 1967 | 7 | 31 | 0 | 0.0 | 0.0 | 0 | 1,774 | $16.24 | $3,494.78 | $0.00 | $0.00 | $0.00 | $0.00 | $16.24 | $3,494.78 | 0.0% |
| 229 | 1967 | 8 | 31 | 0 | 0.0 | 0.0 | 0 | 1,774 | $16.24 | $3,494.78 | $0.00 | $0.00 | $0.00 | $0.00 | $16.24 | $3,494.78 | 0.0% |

Little Bayou Meto
Flood Control Pumping Plant
3000-cfs (2 4000-hp)



| | A | B | C | D | E | F | G | H | I | J | K | L | M | N | O | P | Q |
|---|---|---|---|---|---|---|---|---|---|---|---|---|---|---|---|---|---|
| 1 | | | | | | | | | | Minimum | | | | | | | |
| 2 | | | | | | | | | | Monthly | Billing | | | | | | |
| 3 | | | | Metered | | | Billing | Ratchet | Customer | Demand | Demand | Incremental Energy | | Energy | | | Monthly |
| 4 | Period-of-Record | | | Energy | Demands | | Demand | Demand | Charge | Charge | Charge | Block 1 | Block 2 | Charge | Subtotal Bill | Total Bill | Load |
| 5 | YEAR | MO | DAYS | kWh | kWD | kVAD | kWD | kWD | $16.24 | $1.97 | $2.95 | $0.05607 | $0.04493 | kWh | | | Factor |
| 230 | 1967 | 9 | 30 | 0 | 0.0 | 0.0 | 0 | 1,774 | $16.24 | $3,494.78 | $0.00 | $0.00 | $0.00 | $0.00 | $16.24 | $3,494.78 | 0.0% |
| 231 | 1967 | 10 | 31 | 0 | 0.0 | 0.0 | 0 | 1,774 | $16.24 | $3,494.78 | $0.00 | $0.00 | $0.00 | $0.00 | $16.24 | $3,494.78 | 0.0% |
| 232 | 1967 | 11 | 30 | 0 | 0.0 | 0.0 | 0 | 1,774 | $16.24 | $3,494.78 | $0.00 | $0.00 | $0.00 | $0.00 | $16.24 | $3,494.78 | 0.0% |
| 233 | 1967 | 12 | 31 | 0 | 0.0 | 0.0 | 0 | 1,774 | $16.24 | $3,494.78 | $0.00 | $0.00 | $0.00 | $0.00 | $16.24 | $3,494.78 | 0.0% |
| 234 | 1968 | 1 | 31 | 0 | 0.0 | 0.0 | 0 | 1,774 | $16.24 | $3,494.78 | $0.00 | $0.00 | $0.00 | $0.00 | $16.24 | $3,494.78 | 0.0% |
| 235 | 1968 | 2 | 29 | 0 | 0.0 | 0.0 | 0 | 1,774 | $16.24 | $3,494.78 | $0.00 | $0.00 | $0.00 | $0.00 | $16.24 | $3,494.78 | 0.0% |
| 236 | 1968 | 3 | 31 | 833,135 | 7,480.3 | 9,578.8 | 7,480 | 7,480 | $16.24 | $14,735.60 | $22,066.00 | $1,122,044.00 | $0.00 | $46,713.88 | $68,796.12 | $68,796.12 | 15.0% |
| 237 | 1968 | 4 | 30 | 1,027,113 | 6,749.2 | 8,787.0 | 6,749 | 7,480 | $16.24 | $14,735.60 | $19,909.55 | $1,012,385.00 | $14,728.00 | $57,426.16 | $77,351.95 | $77,351.95 | 21.1% |
| 238 | 1968 | 5 | 31 | 2,206,146 | 6,988.1 | 9,048.9 | 6,988 | 7,480 | $16.24 | $14,735.60 | $20,614.60 | $1,048,219.00 | $1,157,927.00 | $110,799.30 | $131,430.14 | $131,430.14 | 42.4% |
| 239 | 1968 | 6 | 30 | 0 | 0.0 | 0.0 | 0 | 7,480 | $16.24 | $14,735.60 | $0.00 | $0.00 | $0.00 | $0.00 | $16.24 | $14,735.60 | 0.0% |
| 240 | 1968 | 7 | 31 | 0 | 0.0 | 0.0 | 0 | 7,480 | $16.24 | $14,735.60 | $0.00 | $0.00 | $0.00 | $0.00 | $16.24 | $14,735.60 | 0.0% |
| 241 | 1968 | 8 | 31 | 0 | 0.0 | 0.0 | 0 | 7,480 | $16.24 | $14,735.60 | $0.00 | $0.00 | $0.00 | $0.00 | $16.24 | $14,735.60 | 0.0% |
| 242 | 1968 | 9 | 30 | 0 | 0.0 | 0.0 | 0 | 7,480 | $16.24 | $14,735.60 | $0.00 | $0.00 | $0.00 | $0.00 | $16.24 | $14,735.60 | 0.0% |
| 243 | 1968 | 10 | 31 | 0 | 0.0 | 0.0 | 0 | 7,480 | $16.24 | $14,735.60 | $0.00 | $0.00 | $0.00 | $0.00 | $16.24 | $14,735.60 | 0.0% |
| 244 | 1968 | 11 | 30 | 0 | 0.0 | 0.0 | 0 | 7,480 | $16.24 | $14,735.60 | $0.00 | $0.00 | $0.00 | $0.00 | $16.24 | $14,735.60 | 0.0% |
| 245 | 1968 | 12 | 31 | 1,293,254 | 6,508.8 | 8,520.2 | 6,509 | 7,480 | $16.24 | $14,735.60 | $19,201.55 | $976,323.00 | $316,931.00 | $68,982.14 | $88,199.93 | $88,199.93 | 26.7% |
| 246 | 1969 | 1 | 31 | 199,467 | 6,537.4 | 8,552.1 | 6,537 | 7,480 | $16.24 | $14,735.60 | $19,284.15 | $980,611.00 | $0.00 | $11,184.13 | $30,484.52 | $30,484.52 | 4.1% |
| 247 | 1969 | 2 | 28 | 2,611,280 | 7,044.4 | 9,110.1 | 7,044 | 7,480 | $16.24 | $14,735.60 | $20,779.80 | $1,056,656.00 | $1,554,624.00 | $129,095.96 | $149,892.00 | $149,892.00 | 55.2% |
| 248 | 1969 | 3 | 31 | 485,821 | 7,618.4 | 9,725.1 | 7,618 | 7,618 | $16.24 | $15,007.46 | $22,473.10 | $1,142,756.00 | $0.00 | $27,239.97 | $49,729.31 | $49,729.31 | 8.6% |
| 249 | 1969 | 4 | 30 | 615,520 | 6,547.3 | 8,563.1 | 6,547 | 7,618 | $16.24 | $15,007.46 | $19,313.65 | $982,092.00 | $0.00 | $34,512.18 | $53,842.07 | $53,842.07 | 13.1% |
| 250 | 1969 | 5 | 31 | 314,550 | 6,749.2 | 8,787.0 | 6,749 | 7,618 | $16.24 | $15,007.46 | $19,909.55 | $1,012,385.00 | $0.00 | $17,636.81 | $37,562.60 | $37,562.60 | 6.3% |
| 251 | 1969 | 6 | 30 | 153,338 | 6,389.1 | 8,386.2 | 6,389 | 7,618 | $16.24 | $15,007.46 | $18,847.55 | $958,365.00 | $0.00 | $8,597.68 | $27,461.47 | $27,461.47 | 3.3% |
| 252 | 1969 | 7 | 31 | 0 | 0.0 | 0.0 | 0 | 7,618 | $16.24 | $15,007.46 | $0.00 | $0.00 | $0.00 | $0.00 | $16.24 | $15,007.46 | 0.0% |
| 253 | 1969 | 8 | 31 | 0 | 0.0 | 0.0 | 0 | 7,618 | $16.24 | $15,007.46 | $0.00 | $0.00 | $0.00 | $0.00 | $16.24 | $15,007.46 | 0.0% |
| 254 | 1969 | 9 | 30 | 0 | 0.0 | 0.0 | 0 | 7,618 | $16.24 | $15,007.46 | $0.00 | $0.00 | $0.00 | $0.00 | $16.24 | $15,007.46 | 0.0% |
| 255 | 1969 | 10 | 31 | 0 | 0.0 | 0.0 | 0 | 7,618 | $16.24 | $15,007.46 | $0.00 | $0.00 | $0.00 | $0.00 | $16.24 | $15,007.46 | 0.0% |
| 256 | 1969 | 11 | 30 | 0 | 0.0 | 0.0 | 0 | 7,618 | $16.24 | $15,007.46 | $0.00 | $0.00 | $0.00 | $0.00 | $16.24 | $15,007.46 | 0.0% |
| 257 | 1969 | 12 | 31 | 0 | 0.0 | 0.0 | 0 | 7,618 | $16.24 | $15,007.46 | $0.00 | $0.00 | $0.00 | $0.00 | $16.24 | $15,007.46 | 0.0% |
| 258 | 1970 | 1 | 31 | 817,842 | 7,291.3 | 9,376.8 | 7,291 | 7,618 | $16.24 | $15,007.46 | $21,508.45 | $1,093,696.00 | $0.00 | $45,856.42 | $67,381.11 | $67,381.11 | 15.1% |
| 259 | 1970 | 2 | 28 | 0 | 0.0 | 0.0 | 0 | 7,618 | $16.24 | $15,007.46 | $0.00 | $0.00 | $0.00 | $0.00 | $16.24 | $15,007.46 | 0.0% |
| 260 | 1970 | 3 | 31 | 596,154 | 6,208.1 | 8,182.1 | 6,208 | 7,291 | $16.24 | $14,363.27 | $18,313.60 | $931,209.00 | $0.00 | $33,426.33 | $51,756.17 | $51,756.17 | 12.9% |
| 261 | 1970 | 4 | 30 | 1,119,630 | 7,601.6 | 9,707.4 | 7,602 | 7,602 | $16.24 | $14,975.94 | $22,425.90 | $1,140,239.00 | $0.00 | $62,777.67 | $85,219.81 | $85,219.81 | 20.5% |
| 262 | 1970 | 5 | 31 | 1,515,043 | 7,508.0 | 9,608.2 | 7,508 | 7,602 | $16.24 | $14,975.94 | $22,148.60 | $1,126,197.00 | $388,846.00 | $80,616.72 | $102,781.56 | $102,781.56 | 27.1% |
| 263 | 1970 | 6 | 30 | 405,433 | 4,434.3 | 5,844.4 | 4,434 | 7,602 | $16.24 | $14,975.94 | $13,080.30 | $665,149.00 | $0.00 | $22,732.62 | $35,829.16 | $35,829.16 | 12.7% |
| 264 | 1970 | 7 | 31 | 0 | 0.0 | 0.0 | 0 | 7,602 | $16.24 | $14,975.94 | $0.00 | $0.00 | $0.00 | $0.00 | $16.24 | $14,975.94 | 0.0% |
| 265 | 1970 | 8 | 31 | 0 | 0.0 | 0.0 | 0 | 7,602 | $16.24 | $14,975.94 | $0.00 | $0.00 | $0.00 | $0.00 | $16.24 | $14,975.94 | 0.0% |
| 266 | 1970 | 9 | 30 | 0 | 0.0 | 0.0 | 0 | 7,602 | $16.24 | $14,975.94 | $0.00 | $0.00 | $0.00 | $0.00 | $16.24 | $14,975.94 | 0.0% |
| 267 | 1970 | 10 | 31 | 161,352 | 6,723.0 | 8,758.0 | 6,723 | 7,602 | $16.24 | $14,975.94 | $19,832.85 | $1,008,453.00 | $0.00 | $9,047.03 | $28,896.12 | $28,896.12 | 3.2% |
| 268 | 1970 | 11 | 30 | 0 | 0.0 | 0.0 | 0 | 7,602 | $16.24 | $14,975.94 | $0.00 | $0.00 | $0.00 | $0.00 | $16.24 | $14,975.94 | 0.0% |
| 269 | 1970 | 12 | 31 | 0 | 0.0 | 0.0 | 0 | 7,602 | $16.24 | $14,975.94 | $0.00 | $0.00 | $0.00 | $0.00 | $16.24 | $14,975.94 | 0.0% |
| 270 | 1971 | 1 | 31 | 643,295 | 6,277.5 | 8,260.6 | 6,278 | 7,602 | $16.24 | $14,975.94 | $18,520.10 | $941,627.00 | $0.00 | $36,069.55 | $54,605.89 | $54,605.89 | 13.8% |
| 271 | 1971 | 2 | 28 | 0 | 0.0 | 0.0 | 0 | 7,602 | $16.24 | $14,975.94 | $0.00 | $0.00 | $0.00 | $0.00 | $16.24 | $14,975.94 | 0.0% |
| 272 | 1971 | 3 | 31 | 1,068,377 | 6,208.1 | 8,182.1 | 6,208 | 7,602 | $16.24 | $14,975.94 | $18,313.60 | $931,209.00 | $137,168.00 | $58,375.85 | $76,705.69 | $76,705.69 | 23.1% |
| 273 | 1971 | 4 | 30 | 213,115 | 1,784.9 | 2,350.3 | 1,785 | 7,508 | $16.24 | $14,790.76 | $5,265.75 | $267,730.00 | $0.00 | $11,949.35 | $17,231.34 | $17,231.34 | 16.6% |
| 274 | 1971 | 5 | 31 | 0 | 0.0 | 0.0 | 0 | 6,723 | $16.24 | $13,244.31 | $0.00 | $0.00 | $0.00 | $0.00 | $16.24 | $13,244.31 | 0.0% |
| 275 | 1971 | 6 | 30 | 0 | 0.0 | 0.0 | 0 | 6,723 | $16.24 | $13,244.31 | $0.00 | $0.00 | $0.00 | $0.00 | $16.24 | $13,244.31 | 0.0% |
| 276 | 1971 | 7 | 31 | 0 | 0.0 | 0.0 | 0 | 6,723 | $16.24 | $13,244.31 | $0.00 | $0.00 | $0.00 | $0.00 | $16.24 | $13,244.31 | 0.0% |
| 277 | 1971 | 8 | 31 | 0 | 0.0 | 0.0 | 0 | 6,723 | $16.24 | $13,244.31 | $0.00 | $0.00 | $0.00 | $0.00 | $16.24 | $13,244.31 | 0.0% |
| 278 | 1971 | 9 | 30 | 0 | 0.0 | 0.0 | 0 | 6,723 | $16.24 | $13,244.31 | $0.00 | $0.00 | $0.00 | $0.00 | $16.24 | $13,244.31 | 0.0% |
| 279 | 1971 | 10 | 31 | 0 | 0.0 | 0.0 | 0 | 6,278 | $16.24 | $12,367.66 | $0.00 | $0.00 | $0.00 | $0.00 | $16.24 | $12,367.66 | 0.0% |
| 280 | 1971 | 11 | 30 | 0 | 0.0 | 0.0 | 0 | 6,278 | $16.24 | $12,367.66 | $0.00 | $0.00 | $0.00 | $0.00 | $16.24 | $12,367.66 | 0.0% |
| 281 | 1971 | 12 | 31 | 2,010,811 | 7,684.1 | 9,794.4 | 7,684 | 7,684 | $16.24 | $15,137.48 | $22,667.80 | $1,152,620.00 | $858,191.00 | $103,185.93 | $125,869.97 | $125,869.97 | 35.2% |
| 282 | 1972 | 1 | 31 | 772,751 | 6,358.7 | 8,352.1 | 6,359 | 7,684 | $16.24 | $15,137.48 | $18,759.05 | $953,804.00 | $0.00 | $43,328.18 | $62,103.47 | $62,103.47 | 16.3% |
| 283 | 1972 | 2 | 29 | 85,139 | 1,773.7 | 2,337.7 | 1,774 | 7,684 | $16.24 | $15,137.48 | $5,233.30 | $266,060.00 | $0.00 | $4,773.75 | $10,023.29 | $15,137.48 | 6.9% |
| 284 | 1972 | 3 | 31 | 0 | 0.0 | 0.0 | 0 | 7,684 | $16.24 | $15,137.48 | $0.00 | $0.00 | $0.00 | $0.00 | $16.24 | $15,137.48 | 0.0% |
| 285 | 1972 | 4 | 30 | 106,424 | 4,434.3 | 5,844.4 | 4,434 | 7,684 | $16.24 | $15,137.48 | $13,080.30 | $665,149.00 | $0.00 | $5,967.18 | $19,063.72 | $19,063.72 | 3.3% |

Little Bayou Meto
Flood Control Pumping Plant
3000-cfs (2 4000-hp)



| | A | B | C | D | E | F | G | H | I | J | K | L | M | N | O | P | Q |
|---|---|---|---|---|---|---|---|---|---|---|---|---|---|---|---|---|---|
| 1 | | | | | | | | | | Minimum | | | | | | | |
| 2 | | | | | | | | | | Monthly | Billing | | | | | | |
| 3 | | | | Metered | | | Billing | Ratchet | Customer | Demand | Demand | Incremental Energy | | Energy | | | Monthly |
| 4 | Period-of-Record | | | Energy | Demands | | Demand | Demand | Charge | Charge | Charge | Block 1 | Block 2 | Charge | Subtotal Bill | Total Bill | Load |
| 5 | YEAR | MO | DAYS | kWh | kWD | kVAD | kWD | kWD | $16.24 | $1.97 | $2.95 | $0.05607 | $0.04493 | kWh | | | Factor |
| 286 | 1972 | 5 | 31 | 0 | 0.0 | 0.0 | 0 | 7,684 | $16.24 | $15,137.48 | $0.00 | $0.00 | $0.00 | $0.00 | $16.24 | $15,137.48 | 0.0% |
| 287 | 1972 | 6 | 30 | 0 | 0.0 | 0.0 | 0 | 7,684 | $16.24 | $15,137.48 | $0.00 | $0.00 | $0.00 | $0.00 | $16.24 | $15,137.48 | 0.0% |
| 288 | 1972 | 7 | 31 | 0 | 0.0 | 0.0 | 0 | 7,684 | $16.24 | $15,137.48 | $0.00 | $0.00 | $0.00 | $0.00 | $16.24 | $15,137.48 | 0.0% |
| 289 | 1972 | 8 | 31 | 0 | 0.0 | 0.0 | 0 | 7,684 | $16.24 | $15,137.48 | $0.00 | $0.00 | $0.00 | $0.00 | $16.24 | $15,137.48 | 0.0% |
| 290 | 1972 | 9 | 30 | 0 | 0.0 | 0.0 | 0 | 7,684 | $16.24 | $15,137.48 | $0.00 | $0.00 | $0.00 | $0.00 | $16.24 | $15,137.48 | 0.0% |
| 291 | 1972 | 10 | 31 | 0 | 0.0 | 0.0 | 0 | 7,684 | $16.24 | $15,137.48 | $0.00 | $0.00 | $0.00 | $0.00 | $16.24 | $15,137.48 | 0.0% |
| 292 | 1972 | 11 | 30 | 2,680,678 | 7,264.8 | 9,348.4 | 7,265 | 7,684 | $16.24 | $15,137.48 | $21,431.75 | $1,089,721.00 | $1,590,957.00 | $132,582.35 | $154,030.34 | $154,030.34 | 51.2% |
| 293 | 1972 | 12 | 31 | 2,408,601 | 6,701.7 | 8,734.5 | 6,702 | 7,265 | $16.24 | $14,312.05 | $19,770.90 | $1,005,256.00 | $1,403,345.00 | $119,416.99 | $139,204.13 | $139,204.13 | 48.3% |
| 294 | 1973 | 1 | 31 | 832,011 | 7,754.9 | 9,868.8 | 7,755 | 7,755 | $16.24 | $15,277.35 | $22,877.25 | $1,163,241.00 | $0.00 | $46,650.88 | $69,544.37 | $69,544.37 | 14.4% |
| 295 | 1973 | 2 | 28 | 2,207,450 | 8,137.2 | 10,266.0 | 8,137 | 8,137 | $16.24 | $16,029.89 | $24,004.15 | $1,220,577.00 | $986,873.00 | $112,777.96 | $136,798.35 | $136,798.35 | 40.4% |
| 296 | 1973 | 3 | 31 | 2,149,368 | 8,102.1 | 10,229.8 | 8,102 | 8,137 | $16.24 | $16,029.89 | $23,900.90 | $1,215,313.00 | $934,055.00 | $110,109.69 | $134,026.83 | $134,026.83 | 35.7% |
| 297 | 1973 | 4 | 30 | 3,498,587 | 8,132.6 | 10,261.3 | 8,133 | 8,137 | $16.24 | $16,029.89 | $23,992.35 | $1,219,890.00 | $2,278,697.00 | $170,781.09 | $194,789.68 | $194,789.68 | 59.7% |
| 298 | 1973 | 5 | 31 | 4,562,550 | 7,985.9 | 10,109.7 | 7,986 | 8,137 | $16.24 | $16,029.89 | $23,558.70 | $1,197,887.00 | $3,364,663.00 | $218,339.83 | $241,914.77 | $241,914.77 | 76.8% |
| 299 | 1973 | 6 | 30 | 882,356 | 8,195.3 | 10,325.7 | 8,195 | 8,195 | $16.24 | $16,144.15 | $24,175.25 | $1,229,300.00 | $0.00 | $49,473.69 | $73,665.18 | $73,665.18 | 15.0% |
| 300 | 1973 | 7 | 31 | 0 | 0.0 | 0.0 | 0 | 8,195 | $16.24 | $16,144.15 | $0.00 | $0.00 | $0.00 | $0.00 | $16.24 | $16,144.15 | 0.0% |
| 301 | 1973 | 8 | 31 | 0 | 0.0 | 0.0 | 0 | 8,195 | $16.24 | $16,144.15 | $0.00 | $0.00 | $0.00 | $0.00 | $16.24 | $16,144.15 | 0.0% |
| 302 | 1973 | 9 | 30 | 0 | 0.0 | 0.0 | 0 | 8,195 | $16.24 | $16,144.15 | $0.00 | $0.00 | $0.00 | $0.00 | $16.24 | $16,144.15 | 0.0% |
| 303 | 1973 | 10 | 31 | 290,622 | 7,613.2 | 9,719.6 | 7,613 | 8,195 | $16.24 | $16,144.15 | $22,458.35 | $1,141,981.00 | $0.00 | $16,295.16 | $38,769.75 | $38,769.75 | 5.1% |
| 304 | 1973 | 11 | 30 | 890,790 | 8,782.0 | 10,918.7 | 8,782 | 8,782 | $16.24 | $17,300.54 | $25,906.90 | $1,317,299.00 | $0.00 | $49,946.61 | $75,869.75 | $75,869.75 | 14.1% |
| 305 | 1973 | 12 | 31 | 2,078,054 | 7,680.3 | 9,790.4 | 7,680 | 8,782 | $16.24 | $17,300.54 | $22,656.00 | $1,152,040.00 | $926,014.00 | $106,200.69 | $128,872.93 | $128,872.93 | 36.4% |
| 306 | 1974 | 1 | 31 | 2,395,226 | 7,325.7 | 9,413.7 | 7,326 | 8,782 | $16.24 | $17,300.54 | $21,611.70 | $1,098,859.00 | $1,296,367.00 | $119,858.79 | $141,486.73 | $141,486.73 | 43.9% |
| 307 | 1974 | 2 | 28 | 902,568 | 6,433.0 | 8,435.4 | 6,433 | 8,782 | $16.24 | $17,300.54 | $18,977.35 | $964,947.00 | $0.00 | $50,606.99 | $69,600.58 | $69,600.58 | 20.9% |
| 308 | 1974 | 3 | 31 | 1,037,173 | 7,650.6 | 9,759.1 | 7,651 | 8,782 | $16.24 | $17,300.54 | $22,570.45 | $1,147,593.00 | $0.00 | $58,154.27 | $80,740.96 | $80,740.96 | 18.2% |
| 309 | 1974 | 4 | 30 | 728,101 | 6,208.1 | 8,182.1 | 6,208 | 8,782 | $16.24 | $17,300.54 | $18,313.60 | $931,209.00 | $0.00 | $40,824.64 | $59,154.48 | $59,154.48 | 16.3% |
| 310 | 1974 | 5 | 31 | 1,911,794 | 7,166.3 | 9,242.2 | 7,166 | 8,782 | $16.24 | $17,300.54 | $21,139.70 | $1,074,940.00 | $836,854.00 | $97,871.74 | $119,027.68 | $119,027.68 | 35.9% |
| 311 | 1974 | 6 | 30 | 3,241,267 | 8,341.3 | 10,474.9 | 8,341 | 8,782 | $16.24 | $17,300.54 | $24,605.95 | $1,251,188.00 | $1,990,079.00 | $159,568.36 | $184,190.55 | $184,190.55 | 54.0% |
| 312 | 1974 | 7 | 31 | 415,738 | 4,434.3 | 5,844.4 | 4,434 | 8,782 | $16.24 | $17,300.54 | $13,080.30 | $665,149.00 | $0.00 | $23,310.41 | $36,406.95 | $36,406.95 | 12.6% |
| 313 | 1974 | 8 | 31 | 439,029 | 6,208.1 | 8,182.1 | 6,208 | 8,782 | $16.24 | $17,300.54 | $18,313.60 | $931,209.00 | $0.00 | $24,616.36 | $42,946.20 | $42,946.20 | 9.5% |
| 314 | 1974 | 9 | 30 | 301,116 | 6,326.6 | 8,315.9 | 6,327 | 8,782 | $16.24 | $17,300.54 | $18,664.65 | $948,987.00 | $0.00 | $16,883.58 | $35,564.47 | $35,564.47 | 6.6% |
| 315 | 1974 | 10 | 31 | 43,046 | 1,793.6 | 2,360.2 | 1,794 | 8,782 | $16.24 | $17,300.54 | $5,292.30 | $269,036.00 | $0.00 | $2,413.58 | $7,722.12 | $17,300.54 | 3.2% |
| 316 | 1974 | 11 | 30 | 1,811,442 | 7,838.7 | 9,956.6 | 7,839 | 8,341 | $16.24 | $16,431.77 | $23,125.05 | $1,175,810.00 | $635,632.00 | $94,486.61 | $117,627.90 | $117,627.90 | 32.1% |
| 317 | 1974 | 12 | 31 | 297,987 | 6,208.1 | 8,182.1 | 6,208 | 8,341 | $16.24 | $16,431.77 | $18,313.60 | $931,209.00 | $0.00 | $16,708.12 | $35,037.96 | $35,037.96 | 6.5% |
| 318 | 1975 | 1 | 31 | 1,579,312 | 7,204.7 | 9,283.6 | 7,205 | 8,341 | $16.24 | $16,431.77 | $21,254.75 | $1,080,703.00 | $498,609.00 | $82,997.52 | $104,268.51 | $104,268.51 | 29.5% |
| 319 | 1975 | 2 | 28 | 834,364 | 7,373.3 | 9,464.7 | 7,373 | 8,341 | $16.24 | $16,431.77 | $21,750.35 | $1,106,002.00 | $0.00 | $46,782.80 | $68,549.39 | $68,549.39 | 16.8% |
| 320 | 1975 | 3 | 31 | 2,489,604 | 7,654.5 | 9,763.2 | 7,654 | 8,341 | $16.24 | $16,431.77 | $22,579.30 | $1,148,173.00 | $1,341,431.00 | $124,648.55 | $147,244.09 | $147,244.09 | 43.7% |
| 321 | 1975 | 4 | 30 | 1,258,034 | 8,246.5 | 10,378.2 | 8,247 | 8,341 | $16.24 | $16,431.77 | $24,328.65 | $1,236,978.00 | $21,056.00 | $70,303.40 | $94,648.29 | $94,648.29 | 21.2% |
| 322 | 1975 | 5 | 31 | 2,298,965 | 7,715.0 | 9,827.0 | 7,715 | 8,341 | $16.24 | $16,431.77 | $22,759.25 | $1,157,257.00 | $1,141,708.00 | $116,184.34 | $138,959.83 | $138,959.83 | 40.1% |
| 323 | 1975 | 6 | 30 | 1,392,699 | 7,637.7 | 9,745.5 | 7,638 | 8,247 | $16.24 | $16,246.59 | $22,532.10 | $1,145,658.00 | $247,041.00 | $75,336.60 | $97,884.94 | $97,884.94 | 25.3% |
| 324 | 1975 | 7 | 31 | 0 | 0.0 | 0.0 | 0 | 8,247 | $16.24 | $16,246.59 | $0.00 | $0.00 | $0.00 | $0.00 | $16.24 | $16,246.59 | 0.0% |
| 325 | 1975 | 8 | 31 | 42,581 | 1,774.2 | 2,338.3 | 1,774 | 8,247 | $16.24 | $16,246.59 | $5,233.30 | $266,132.00 | $0.00 | $2,387.53 | $7,637.07 | $16,246.59 | 3.2% |
| 326 | 1975 | 9 | 30 | 0 | 0.0 | 0.0 | 0 | 8,247 | $16.24 | $16,246.59 | $0.00 | $0.00 | $0.00 | $0.00 | $16.24 | $16,246.59 | 0.0% |
| 327 | 1975 | 10 | 31 | 0 | 0.0 | 0.0 | 0 | 8,247 | $16.24 | $16,246.59 | $0.00 | $0.00 | $0.00 | $0.00 | $16.24 | $16,246.59 | 0.0% |
| 328 | 1975 | 11 | 30 | 42,570 | 1,773.7 | 2,337.7 | 1,774 | 8,247 | $16.24 | $16,246.59 | $5,233.30 | $266,060.00 | $0.00 | $2,386.87 | $7,636.41 | $16,246.59 | 3.3% |
| 329 | 1975 | 12 | 31 | 0 | 0.0 | 0.0 | 0 | 8,247 | $16.24 | $16,246.59 | $0.00 | $0.00 | $0.00 | $0.00 | $16.24 | $16,246.59 | 0.0% |
| 330 | 1976 | 1 | 31 | 282,876 | 4,434.3 | 5,844.4 | 4,434 | 8,247 | $16.24 | $16,246.59 | $13,080.30 | $665,149.00 | $0.00 | $15,860.84 | $28,957.38 | $28,957.38 | 8.6% |
| 331 | 1976 | 2 | 29 | 440,169 | 1,937.2 | 2,520.4 | 1,937 | 8,247 | $16.24 | $16,246.59 | $5,714.15 | $290,586.00 | $149,583.00 | $23,013.92 | $28,744.31 | $28,744.31 | 32.6% |
| 332 | 1976 | 3 | 31 | 1,288,017 | 6,436.4 | 8,439.2 | 6,436 | 8,247 | $16.24 | $16,246.59 | $18,986.20 | $965,453.00 | $322,564.00 | $68,625.75 | $87,628.19 | $87,628.19 | 26.9% |
| 333 | 1976 | 4 | 30 | 1,094,466 | 7,531.7 | 9,633.4 | 7,532 | 7,715 | $16.24 | $15,198.55 | $22,219.40 | $1,129,755.00 | $0.00 | $61,366.70 | $83,602.34 | $83,602.34 | 20.2% |
| 334 | 1976 | 5 | 31 | 1,474,234 | 6,350.2 | 8,342.6 | 6,350 | 7,638 | $16.24 | $15,046.86 | $18,732.50 | $952,537.00 | $521,697.00 | $76,848.60 | $95,597.34 | $95,597.34 | 31.2% |
| 335 | 1976 | 6 | 30 | 705,509 | 6,247.0 | 8,226.2 | 6,247 | 7,532 | $16.24 | $14,838.04 | $18,428.65 | $937,055.00 | $0.00 | $39,557.92 | $58,002.81 | $58,002.81 | 15.7% |
| 336 | 1976 | 7 | 31 | 1,079,624 | 7,179.1 | 9,256.0 | 7,179 | 7,532 | $16.24 | $14,838.04 | $21,178.05 | $1,076,861.00 | $2,763.00 | $60,503.74 | $81,698.03 | $81,698.03 | 20.2% |
| 337 | 1976 | 8 | 31 | 42,570 | 1,773.7 | 2,337.7 | 1,774 | 7,532 | $16.24 | $14,838.04 | $5,233.30 | $266,060.00 | $0.00 | $2,386.87 | $7,636.41 | $14,838.04 | 3.2% |
| 338 | 1976 | 9 | 30 | 0 | 0.0 | 0.0 | 0 | 7,532 | $16.24 | $14,838.04 | $0.00 | $0.00 | $0.00 | $0.00 | $16.24 | $14,838.04 | 0.0% |
| 339 | 1976 | 10 | 31 | 130,812 | 1,903.1 | 2,482.6 | 1,903 | 7,532 | $16.24 | $14,838.04 | $5,613.85 | $285,458.00 | $0.00 | $7,334.65 | $12,964.74 | $14,838.04 | 9.2% |
| 340 | 1976 | 11 | 30 | 266,678 | 1,944.3 | 2,528.1 | 1,944 | 7,532 | $16.24 | $14,838.04 | $5,734.80 | $291,638.00 | $0.00 | $14,952.63 | $20,703.67 | $20,703.67 | 19.1% |
| 341 | 1976 | 12 | 31 | 0 | 0.0 | 0.0 | 0 | 7,532 | $16.24 | $14,838.04 | $0.00 | $0.00 | $0.00 | $0.00 | $16.24 | $14,838.04 | 0.0% |

Little Bayou Meto
Flood Control Pumping Plant
3000-cfs (2 4000-hp)



| | A | B | C | D | E | F | G | H | I | J | K | L | M | N | O | P | Q |
|---|---|---|---|---|---|---|---|---|---|---|---|---|---|---|---|---|---|
| 1 | | | | | | | | | | Minimum | | | | | | | |
| 2 | | | | | | | | | | Monthly | Billing | | | | | | |
| 3 | | | | Metered | | | Billing | Ratchet | Customer | Demand | Demand | Incremental Energy | | Energy | | | Monthly |
| 4 | Period-of-Record | | | Energy | Demands | | Demand | Demand | Charge | Charge | Charge | Block 1 | Block 2 | Charge | Subtotal Bill | Total Bill | Load |
| 5 | YEAR | MO | DAYS | kWh | kWD | kVAD | kWD | kWD | $16.24 | $1.97 | $2.95 | $0.05607 | $0.04493 | kWh | | | Factor |
| 342 | 1977 | 1 | 31 | 300,374 | 1,865.4 | 2,440.8 | 1,865 | 7,532 | $16.24 | $14,838.04 | $5,501.75 | $279,815.00 | $20,559.00 | $16,612.94 | $22,130.93 | $22,130.93 | 21.6% |
| 343 | 1977 | 2 | 28 | 0 | 0.0 | 0.0 | 0 | 7,532 | $16.24 | $14,838.04 | $0.00 | $0.00 | $0.00 | $0.00 | $16.24 | $14,838.04 | 0.0% |
| 344 | 1977 | 3 | 31 | 1,619,193 | 7,722.8 | 9,835.1 | 7,723 | 7,723 | $16.24 | $15,214.31 | $22,782.85 | $1,158,415.00 | $460,778.00 | $85,655.08 | $108,454.17 | $108,454.17 | 28.2% |
| 345 | 1977 | 4 | 30 | 1,510,912 | 6,956.0 | 9,013.8 | 6,956 | 7,723 | $16.24 | $15,214.31 | $20,520.20 | $1,043,393.00 | $467,519.00 | $79,508.67 | $100,045.11 | $100,045.11 | 30.2% |
| 346 | 1977 | 5 | 31 | 173,545 | 1,887.1 | 2,464.9 | 1,887 | 7,723 | $16.24 | $15,214.31 | $5,566.65 | $283,065.00 | $0.00 | $9,730.66 | $15,313.55 | $15,313.55 | 12.4% |
| 347 | 1977 | 6 | 30 | 176,595 | 1,973.6 | 2,560.3 | 1,974 | 7,723 | $16.24 | $15,214.31 | $5,823.30 | $296,042.00 | $0.00 | $9,901.66 | $15,741.20 | $15,741.20 | 12.4% |
| 348 | 1977 | 7 | 31 | 418,433 | 4,434.3 | 5,844.4 | 4,434 | 7,723 | $16.24 | $15,214.31 | $13,080.30 | $665,149.00 | $0.00 | $23,461.52 | $36,558.06 | $36,558.06 | 12.7% |
| 349 | 1977 | 8 | 31 | 297,987 | 4,434.3 | 5,844.4 | 4,434 | 7,723 | $16.24 | $15,214.31 | $13,080.30 | $665,149.00 | $0.00 | $16,708.12 | $29,804.66 | $29,804.66 | 9.0% |
| 350 | 1977 | 9 | 30 | 532,119 | 4,434.3 | 5,844.4 | 4,434 | 7,723 | $16.24 | $15,214.31 | $13,080.30 | $665,149.00 | $0.00 | $29,835.92 | $42,932.46 | $42,932.46 | 16.7% |
| 351 | 1977 | 10 | 31 | 148,993 | 6,208.1 | 8,182.1 | 6,208 | 7,723 | $16.24 | $15,214.31 | $18,313.60 | $931,209.00 | $0.00 | $8,354.06 | $26,683.90 | $26,683.90 | 3.2% |
| 352 | 1977 | 11 | 30 | 1,045,637 | 6,289.4 | 8,274.0 | 6,289 | 7,723 | $16.24 | $15,214.31 | $18,552.55 | $943,405.00 | $102,232.00 | $57,490.00 | $76,058.79 | $76,058.79 | 23.1% |
| 353 | 1977 | 12 | 31 | 1,070,503 | 6,208.1 | 8,182.1 | 6,208 | 7,723 | $16.24 | $15,214.31 | $18,313.60 | $931,209.00 | $139,294.00 | $58,471.37 | $76,801.21 | $76,801.21 | 23.2% |
| 354 | 1978 | 1 | 31 | 255,417 | 6,208.1 | 8,182.1 | 6,208 | 7,723 | $16.24 | $15,214.31 | $18,313.60 | $931,209.00 | $0.00 | $14,321.24 | $32,651.08 | $32,651.08 | 5.5% |
| 355 | 1978 | 2 | 28 | 662,170 | 6,208.1 | 8,182.1 | 6,208 | 7,723 | $16.24 | $15,214.31 | $18,313.60 | $931,209.00 | $0.00 | $37,127.90 | $55,457.74 | $55,457.74 | 15.9% |
| 356 | 1978 | 3 | 31 | 320,640 | 6,994.6 | 9,055.9 | 6,995 | 6,995 | $16.24 | $13,780.15 | $20,635.25 | $1,049,184.00 | $0.00 | $17,978.30 | $38,629.79 | $38,629.79 | 6.2% |
| 357 | 1978 | 4 | 30 | 591,451 | 7,126.2 | 9,198.8 | 7,126 | 7,126 | $16.24 | $14,038.22 | $21,021.70 | $1,068,931.00 | $0.00 | $33,162.65 | $54,200.59 | $54,200.59 | 11.5% |
| 358 | 1978 | 5 | 31 | 2,811,975 | 8,470.9 | 10,606.5 | 8,471 | 8,471 | $16.24 | $16,687.87 | $24,989.45 | $1,270,637.00 | $1,541,338.00 | $140,496.93 | $165,502.62 | $165,502.62 | 44.6% |
| 359 | 1978 | 6 | 30 | 1,662,952 | 6,652.5 | 8,680.0 | 6,652 | 8,471 | $16.24 | $16,687.87 | $19,623.40 | $997,872.00 | $665,080.00 | $85,832.73 | $105,472.37 | $105,472.37 | 34.7% |
| 360 | 1978 | 7 | 31 | 0 | 0.0 | 0.0 | 0 | 8,471 | $16.24 | $16,687.87 | $0.00 | $0.00 | $0.00 | $0.00 | $16.24 | $16,687.87 | 0.0% |
| 361 | 1978 | 8 | 31 | 0 | 0.0 | 0.0 | 0 | 8,471 | $16.24 | $16,687.87 | $0.00 | $0.00 | $0.00 | $0.00 | $16.24 | $16,687.87 | 0.0% |
| 362 | 1978 | 9 | 30 | 0 | 0.0 | 0.0 | 0 | 8,471 | $16.24 | $16,687.87 | $0.00 | $0.00 | $0.00 | $0.00 | $16.24 | $16,687.87 | 0.0% |
| 363 | 1978 | 10 | 31 | 0 | 0.0 | 0.0 | 0 | 8,471 | $16.24 | $16,687.87 | $0.00 | $0.00 | $0.00 | $0.00 | $16.24 | $16,687.87 | 0.0% |
| 364 | 1978 | 11 | 30 | 0 | 0.0 | 0.0 | 0 | 8,471 | $16.24 | $16,687.87 | $0.00 | $0.00 | $0.00 | $0.00 | $16.24 | $16,687.87 | 0.0% |
| 365 | 1978 | 12 | 31 | 1,721,131 | 6,588.4 | 8,608.9 | 6,588 | 8,471 | $16.24 | $16,687.87 | $19,434.60 | $988,261.00 | $732,870.00 | $88,339.64 | $107,790.48 | $107,790.48 | 35.1% |
| 366 | 1979 | 1 | 31 | 1,683,748 | 6,965.6 | 9,024.3 | 6,966 | 8,471 | $16.24 | $16,687.87 | $20,549.70 | $1,044,841.00 | $638,907.00 | $87,290.33 | $107,856.27 | $107,856.27 | 32.5% |
| 367 | 1979 | 2 | 28 | 150,295 | 6,262.3 | 8,243.4 | 6,262 | 8,471 | $16.24 | $16,687.87 | $18,472.90 | $939,342.00 | $0.00 | $8,427.02 | $26,916.16 | $26,916.16 | 3.6% |
| 368 | 1979 | 3 | 31 | 1,500,268 | 7,543.5 | 9,645.8 | 7,543 | 8,471 | $16.24 | $16,687.87 | $22,251.85 | $1,131,519.00 | $368,749.00 | $80,012.16 | $102,280.25 | $102,280.25 | 26.7% |
| 369 | 1979 | 4 | 30 | 3,081,044 | 7,725.3 | 9,837.8 | 7,725 | 8,471 | $16.24 | $16,687.87 | $22,788.75 | $1,158,802.00 | $1,922,242.00 | $151,340.36 | $174,145.35 | $174,145.35 | 55.4% |
| 370 | 1979 | 5 | 31 | 3,671,267 | 7,889.4 | 10,009.4 | 7,889 | 7,889 | $16.24 | $15,541.33 | $23,272.55 | $1,183,407.00 | $2,487,860.00 | $178,133.18 | $201,421.97 | $201,421.97 | 62.5% |
| 371 | 1979 | 6 | 30 | 2,586,574 | 7,246.2 | 9,328.4 | 7,246 | 7,889 | $16.24 | $15,541.33 | $21,375.70 | $1,086,937.00 | $1,499,637.00 | $128,323.25 | $149,715.19 | $149,715.19 | 49.6% |
| 372 | 1979 | 7 | 31 | 0 | 0.0 | 0.0 | 0 | 7,889 | $16.24 | $15,541.33 | $0.00 | $0.00 | $0.00 | $0.00 | $16.24 | $15,541.33 | 0.0% |
| 373 | 1979 | 8 | 31 | 0 | 0.0 | 0.0 | 0 | 7,889 | $16.24 | $15,541.33 | $0.00 | $0.00 | $0.00 | $0.00 | $16.24 | $15,541.33 | 0.0% |
| 374 | 1979 | 9 | 30 | 0 | 0.0 | 0.0 | 0 | 7,889 | $16.24 | $15,541.33 | $0.00 | $0.00 | $0.00 | $0.00 | $16.24 | $15,541.33 | 0.0% |
| 375 | 1979 | 10 | 31 | 0 | 0.0 | 0.0 | 0 | 7,889 | $16.24 | $15,541.33 | $0.00 | $0.00 | $0.00 | $0.00 | $16.24 | $15,541.33 | 0.0% |
| 376 | 1979 | 11 | 30 | 446,980 | 6,208.1 | 8,182.1 | 6,208 | 7,889 | $16.24 | $15,541.33 | $18,313.60 | $931,209.00 | $0.00 | $25,062.17 | $43,392.01 | $43,392.01 | 10.0% |
| 377 | 1979 | 12 | 31 | 1,988,881 | 7,409.0 | 9,502.8 | 7,409 | 7,889 | $16.24 | $15,541.33 | $21,856.55 | $1,111,354.00 | $877,527.00 | $101,740.91 | $123,613.70 | $123,613.70 | 36.1% |
| 378 | 1980 | 1 | 31 | 319,271 | 4,434.3 | 5,844.4 | 4,434 | 7,889 | $16.24 | $15,541.33 | $13,080.30 | $665,149.00 | $0.00 | $17,901.55 | $30,998.09 | $30,998.09 | 9.7% |
| 379 | 1980 | 2 | 29 | 214,437 | 1,835.6 | 2,407.4 | 1,836 | 7,889 | $16.24 | $15,541.33 | $5,416.20 | $275,338.00 | $0.00 | $12,023.47 | $17,455.91 | $17,455.91 | 16.8% |
| 380 | 1980 | 3 | 31 | 1,489,934 | 6,208.1 | 8,182.1 | 6,208 | 7,889 | $16.24 | $15,541.33 | $18,313.60 | $931,209.00 | $558,725.00 | $77,316.40 | $95,646.24 | $95,646.24 | 32.3% |
| 381 | 1980 | 4 | 30 | 2,326,646 | 7,484.3 | 9,583.0 | 7,484 | 7,889 | $16.24 | $15,541.33 | $22,077.80 | $1,122,638.00 | $1,204,008.00 | $117,042.39 | $139,136.43 | $139,136.43 | 43.2% |
| 382 | 1980 | 5 | 31 | 1,638,615 | 7,097.3 | 9,167.6 | 7,097 | 7,484 | $16.24 | $14,743.48 | $20,936.15 | $1,064,601.00 | $574,014.00 | $85,482.63 | $106,435.02 | $106,435.02 | 31.0% |
| 383 | 1980 | 6 | 30 | 0 | 0.0 | 0.0 | 0 | 7,484 | $16.24 | $14,743.48 | $0.00 | $0.00 | $0.00 | $0.00 | $16.24 | $14,743.48 | 0.0% |
| 384 | 1980 | 7 | 31 | 0 | 0.0 | 0.0 | 0 | 7,484 | $16.24 | $14,743.48 | $0.00 | $0.00 | $0.00 | $0.00 | $16.24 | $14,743.48 | 0.0% |
| 385 | 1980 | 8 | 31 | 0 | 0.0 | 0.0 | 0 | 7,484 | $16.24 | $14,743.48 | $0.00 | $0.00 | $0.00 | $0.00 | $16.24 | $14,743.48 | 0.0% |
| 386 | 1980 | 9 | 30 | 0 | 0.0 | 0.0 | 0 | 7,484 | $16.24 | $14,743.48 | $0.00 | $0.00 | $0.00 | $0.00 | $16.24 | $14,743.48 | 0.0% |
| 387 | 1980 | 10 | 31 | 0 | 0.0 | 0.0 | 0 | 7,484 | $16.24 | $14,743.48 | $0.00 | $0.00 | $0.00 | $0.00 | $16.24 | $14,743.48 | 0.0% |
| 388 | 1980 | 11 | 30 | 0 | 0.0 | 0.0 | 0 | 7,484 | $16.24 | $14,743.48 | $0.00 | $0.00 | $0.00 | $0.00 | $16.24 | $14,743.48 | 0.0% |
| 389 | 1980 | 12 | 31 | 0 | 0.0 | 0.0 | 0 | 7,484 | $16.24 | $14,743.48 | $0.00 | $0.00 | $0.00 | $0.00 | $16.24 | $14,743.48 | 0.0% |
| 390 | 1981 | 1 | 31 | 0 | 0.0 | 0.0 | 0 | 7,484 | $16.24 | $14,743.48 | $0.00 | $0.00 | $0.00 | $0.00 | $16.24 | $14,743.48 | 0.0% |
| 391 | 1981 | 2 | 28 | 0 | 0.0 | 0.0 | 0 | 7,484 | $16.24 | $14,743.48 | $0.00 | $0.00 | $0.00 | $0.00 | $16.24 | $14,743.48 | 0.0% |
| 392 | 1981 | 3 | 31 | 0 | 0.0 | 0.0 | 0 | 7,484 | $16.24 | $14,743.48 | $0.00 | $0.00 | $0.00 | $0.00 | $16.24 | $14,743.48 | 0.0% |
| 393 | 1981 | 4 | 30 | 0 | 0.0 | 0.0 | 0 | 7,097 | $16.24 | $13,981.09 | $0.00 | $0.00 | $0.00 | $0.00 | $16.24 | $13,981.09 | 0.0% |
| 394 | 1981 | 5 | 31 | 468,335 | 1,776.6 | 2,341.0 | 1,777 | 1,777 | $16.24 | $3,500.69 | $5,242.15 | $266,496.00 | $201,839.00 | $24,011.06 | $29,269.45 | $29,269.45 | 35.4% |
| 395 | 1981 | 6 | 30 | 1,373,308 | 6,989.7 | 9,050.6 | 6,990 | 6,990 | $16.24 | $13,770.30 | $20,620.50 | $1,048,460.00 | $324,848.00 | $73,382.57 | $94,019.31 | $94,019.31 | 27.3% |
| 396 | 1981 | 7 | 31 | 0 | 0.0 | 0.0 | 0 | 6,990 | $16.24 | $13,770.30 | $0.00 | $0.00 | $0.00 | $0.00 | $16.24 | $13,770.30 | 0.0% |
| 397 | 1981 | 8 | 31 | 0 | 0.0 | 0.0 | 0 | 6,990 | $16.24 | $13,770.30 | $0.00 | $0.00 | $0.00 | $0.00 | $16.24 | $13,770.30 | 0.0% |

Little Bayou Meto
Flood Control Pumping Plant
3000-cfs (2 4000-hp)



| | A | B | C | D | E | F | G | H | I | J | K | L | M | N | O | P | Q |
|---|---|---|---|---|---|---|---|---|---|---|---|---|---|---|---|---|---|
| 1 | | | | | | | | | | Minimum | | | | | | | |
| 2 | | | | | | | | | | Monthly | Billing | | | | | | |
| 3 | | | | Metered | | | Billing | Ratchet | Customer | Demand | Demand | Incremental Energy | | Energy | | | Monthly |
| 4 | Period-of-Record | | | Energy | Demands | | Demand | Demand | Charge | Charge | Charge | Block 1 | Block 2 | Charge | Subtotal Bill | Total Bill | Load |
| 5 | YEAR | MO | DAYS | kWh | kWD | kVAD | kWD | kWD | $16.24 | $1.97 | $2.95 | $0.05607 | $0.04493 | kWh | | | Factor |
| 398 | 1981 | 9 | 30 | 0 | 0.0 | 0.0 | 0 | 6,990 | $16.24 | $13,770.30 | $0.00 | $0.00 | $0.00 | $0.00 | $16.24 | $13,770.30 | 0.0% |
| 399 | 1981 | 10 | 31 | 361,841 | 6,208.1 | 8,182.1 | 6,208 | 6,990 | $16.24 | $13,770.30 | $18,313.60 | $931,209.00 | $0.00 | $20,288.43 | $38,618.27 | $38,618.27 | 7.8% |
| 400 | 1981 | 11 | 30 | 388,668 | 6,208.1 | 8,182.1 | 6,208 | 6,990 | $16.24 | $13,770.30 | $18,313.60 | $931,209.00 | $0.00 | $21,792.59 | $40,122.43 | $40,122.43 | 8.7% |
| 401 | 1981 | 12 | 31 | 0 | 0.0 | 0.0 | 0 | 6,990 | $16.24 | $13,770.30 | $0.00 | $0.00 | $0.00 | $0.00 | $16.24 | $13,770.30 | 0.0% |
| 402 | 1982 | 1 | 31 | 354,987 | 1,951.7 | 2,536.3 | 1,952 | 6,990 | $16.24 | $13,770.30 | $5,758.40 | $292,760.00 | $62,227.00 | $19,210.91 | $24,985.55 | $24,985.55 | 24.4% |
| 403 | 1982 | 2 | 28 | 1,860,720 | 7,348.2 | 9,437.8 | 7,348 | 7,348 | $16.24 | $14,475.56 | $21,676.60 | $1,102,233.00 | $758,487.00 | $95,881.03 | $117,573.87 | $117,573.87 | 37.7% |
| 404 | 1982 | 3 | 31 | 0 | 0.0 | 0.0 | 0 | 7,348 | $16.24 | $14,475.56 | $0.00 | $0.00 | $0.00 | $0.00 | $16.24 | $14,475.56 | 0.0% |
| 405 | 1982 | 4 | 30 | 1,821,032 | 6,208.1 | 8,182.1 | 6,208 | 7,348 | $16.24 | $14,475.56 | $18,313.60 | $931,209.00 | $889,823.00 | $92,192.64 | $110,522.48 | $110,522.48 | 40.7% |
| 406 | 1982 | 5 | 31 | 1,148,148 | 7,439.4 | 9,535.2 | 7,439 | 7,439 | $16.24 | $14,654.83 | $21,945.05 | $1,115,909.00 | $32,239.00 | $64,017.52 | $85,978.81 | $85,978.81 | 20.7% |
| 407 | 1982 | 6 | 30 | 2,129,997 | 7,636.4 | 9,744.2 | 7,636 | 7,636 | $16.24 | $15,042.92 | $22,526.20 | $1,145,465.00 | $984,532.00 | $108,461.25 | $131,003.69 | $131,003.69 | 38.7% |
| 408 | 1982 | 7 | 31 | 971,069 | 7,970.6 | 10,093.9 | 7,971 | 7,971 | $16.24 | $15,702.87 | $23,514.45 | $1,195,591.00 | $0.00 | $54,447.85 | $77,978.54 | $77,978.54 | 16.4% |
| 409 | 1982 | 8 | 31 | 0 | 0.0 | 0.0 | 0 | 7,971 | $16.24 | $15,702.87 | $0.00 | $0.00 | $0.00 | $0.00 | $16.24 | $15,702.87 | 0.0% |
| 410 | 1982 | 9 | 30 | 0 | 0.0 | 0.0 | 0 | 7,971 | $16.24 | $15,702.87 | $0.00 | $0.00 | $0.00 | $0.00 | $16.24 | $15,702.87 | 0.0% |
| 411 | 1982 | 10 | 31 | 0 | 0.0 | 0.0 | 0 | 7,971 | $16.24 | $15,702.87 | $0.00 | $0.00 | $0.00 | $0.00 | $16.24 | $15,702.87 | 0.0% |
| 412 | 1982 | 11 | 30 | 207,235 | 6,801.6 | 8,844.7 | 6,802 | 7,971 | $16.24 | $15,702.87 | $20,065.90 | $1,020,244.00 | $0.00 | $11,619.68 | $31,701.82 | $31,701.82 | 4.2% |
| 413 | 1982 | 12 | 31 | 2,989,235 | 8,482.0 | 10,617.7 | 8,482 | 8,482 | $16.24 | $16,709.54 | $25,021.90 | $1,272,294.00 | $1,716,941.00 | $148,479.68 | $173,517.82 | $173,517.82 | 47.4% |
| 414 | 1983 | 1 | 31 | 1,431,897 | 7,580.9 | 9,685.5 | 7,581 | 8,482 | $16.24 | $16,709.54 | $22,363.95 | $1,137,140.00 | $294,757.00 | $77,002.87 | $99,383.06 | $99,383.06 | 25.4% |
| 415 | 1983 | 2 | 28 | 1,092,654 | 7,199.9 | 9,278.4 | 7,200 | 8,482 | $16.24 | $16,709.54 | $21,240.00 | $1,079,983.00 | $12,671.00 | $61,123.95 | $82,380.19 | $82,380.19 | 22.6% |
| 416 | 1983 | 3 | 31 | 495,062 | 7,142.2 | 9,216.2 | 7,142 | 8,482 | $16.24 | $16,709.54 | $21,068.90 | $1,071,335.00 | $0.00 | $27,758.10 | $48,843.24 | $48,843.24 | 9.3% |
| 417 | 1983 | 4 | 30 | 2,791,124 | 7,959.9 | 10,082.7 | 7,960 | 8,482 | $16.24 | $16,709.54 | $23,482.00 | $1,193,983.00 | $1,597,141.00 | $138,706.17 | $162,204.41 | $162,204.41 | 48.7% |
| 418 | 1983 | 5 | 31 | 3,510,237 | 8,399.7 | 10,534.3 | 8,400 | 8,482 | $16.24 | $16,709.54 | $24,780.00 | $1,259,960.00 | $2,250,277.00 | $171,750.90 | $196,547.14 | $196,547.14 | 56.2% |
| 419 | 1983 | 6 | 30 | 520,409 | 7,498.8 | 9,598.4 | 7,499 | 8,482 | $16.24 | $16,709.54 | $22,122.05 | $1,124,813.00 | $0.00 | $29,179.34 | $51,317.63 | $51,317.63 | 9.6% |
| 420 | 1983 | 7 | 31 | 0 | 0.0 | 0.0 | 0 | 8,482 | $16.24 | $16,709.54 | $0.00 | $0.00 | $0.00 | $0.00 | $16.24 | $16,709.54 | 0.0% |
| 421 | 1983 | 8 | 31 | 0 | 0.0 | 0.0 | 0 | 8,482 | $16.24 | $16,709.54 | $0.00 | $0.00 | $0.00 | $0.00 | $16.24 | $16,709.54 | 0.0% |
| 422 | 1983 | 9 | 30 | 85,139 | 1,773.7 | 2,337.7 | 1,774 | 8,482 | $16.24 | $16,709.54 | $5,233.30 | $266,060.00 | $0.00 | $4,773.75 | $10,023.29 | $16,709.54 | 6.7% |
| 423 | 1983 | 10 | 31 | 340,556 | 6,208.1 | 8,182.1 | 6,208 | 8,482 | $16.24 | $16,709.54 | $18,313.60 | $931,209.00 | $0.00 | $19,094.99 | $37,424.83 | $37,424.83 | 7.4% |
| 424 | 1983 | 11 | 30 | 446,980 | 6,208.1 | 8,182.1 | 6,208 | 8,482 | $16.24 | $16,709.54 | $18,313.60 | $931,209.00 | $0.00 | $25,062.17 | $43,392.01 | $43,392.01 | 10.0% |
| 425 | 1983 | 12 | 31 | 2,971,215 | 6,780.3 | 8,821.2 | 6,780 | 8,400 | $16.24 | $16,548.00 | $20,001.00 | $1,017,052.00 | $1,954,163.00 | $144,826.65 | $164,843.89 | $164,843.89 | 58.9% |
| 426 | 1984 | 1 | 31 | 457,300 | 4,454.9 | 5,867.6 | 4,455 | 8,400 | $16.24 | $16,548.00 | $13,142.25 | $668,236.00 | $0.00 | $25,640.84 | $38,799.33 | $38,799.33 | 13.8% |
| 427 | 1984 | 2 | 29 | 599,797 | 6,208.1 | 8,182.1 | 6,208 | 8,400 | $16.24 | $16,548.00 | $18,313.60 | $931,209.00 | $0.00 | $33,630.60 | $51,960.44 | $51,960.44 | 13.9% |
| 428 | 1984 | 3 | 31 | 1,724,094 | 6,803.3 | 8,846.5 | 6,803 | 8,400 | $16.24 | $16,548.00 | $20,068.85 | $1,020,489.00 | $703,605.00 | $88,831.79 | $108,916.88 | $108,916.88 | 34.1% |
| 429 | 1984 | 4 | 30 | 1,582,758 | 7,498.8 | 9,598.4 | 7,499 | 8,400 | $16.24 | $16,548.00 | $22,122.05 | $1,124,813.00 | $457,945.00 | $83,643.73 | $105,782.02 | $105,782.02 | 29.3% |
| 430 | 1984 | 5 | 31 | 2,683,659 | 7,050.8 | 9,117.1 | 7,051 | 7,499 | $16.24 | $14,773.03 | $20,800.45 | $1,057,620.00 | $1,626,039.00 | $132,358.69 | $153,175.38 | $153,175.38 | 51.2% |
| 431 | 1984 | 6 | 30 | 610,824 | 7,348.2 | 9,437.8 | 7,348 | 7,499 | $16.24 | $14,773.03 | $21,676.60 | $1,102,233.00 | $0.00 | $34,248.88 | $55,941.72 | $55,941.72 | 11.5% |
| 432 | 1984 | 7 | 31 | 566,952 | 4,861.8 | 6,321.5 | 4,862 | 7,499 | $16.24 | $14,773.03 | $14,342.90 | $729,271.00 | $0.00 | $31,789.00 | $46,148.14 | $46,148.14 | 15.7% |
| 433 | 1984 | 8 | 31 | 0 | 0.0 | 0.0 | 0 | 7,499 | $16.24 | $14,773.03 | $0.00 | $0.00 | $0.00 | $0.00 | $16.24 | $14,773.03 | 0.0% |
| 434 | 1984 | 9 | 30 | 0 | 0.0 | 0.0 | 0 | 7,499 | $16.24 | $14,773.03 | $0.00 | $0.00 | $0.00 | $0.00 | $16.24 | $14,773.03 | 0.0% |
| 435 | 1984 | 10 | 31 | 1,945,930 | 7,766.5 | 9,881.0 | 7,767 | 7,767 | $16.24 | $15,300.99 | $22,912.65 | $1,164,977.00 | $780,953.00 | $100,408.48 | $123,337.37 | $123,337.37 | 33.7% |
| 436 | 1984 | 11 | 30 | 519,419 | 7,668.7 | 9,778.2 | 7,669 | 7,767 | $16.24 | $15,300.99 | $22,623.55 | $1,150,300.00 | $0.00 | $29,123.84 | $51,763.63 | $51,763.63 | 9.4% |
| 437 | 1984 | 12 | 31 | 1,349,268 | 7,525.1 | 9,626.4 | 7,525 | 7,767 | $16.24 | $15,300.99 | $22,198.75 | $1,128,767.00 | $220,501.00 | $73,197.08 | $95,412.07 | $95,412.07 | 24.1% |
| 438 | 1985 | 1 | 31 | 0 | 0.0 | 0.0 | 0 | 7,767 | $16.24 | $15,300.99 | $0.00 | $0.00 | $0.00 | $0.00 | $16.24 | $15,300.99 | 0.0% |
| 439 | 1985 | 2 | 28 | 1,425,928 | 8,007.3 | 10,131.9 | 8,007 | 8,007 | $16.24 | $15,773.79 | $23,620.65 | $1,201,101.00 | $224,827.00 | $77,447.21 | $101,084.10 | $101,084.10 | 26.5% |
| 440 | 1985 | 3 | 31 | 1,472,902 | 7,808.9 | 9,925.4 | 7,809 | 8,007 | $16.24 | $15,773.79 | $23,036.55 | $1,171,340.00 | $301,562.00 | $79,226.21 | $102,279.00 | $102,279.00 | 25.4% |
| 441 | 1985 | 4 | 30 | 1,830,538 | 8,065.4 | 10,192.0 | 8,065 | 8,065 | $16.24 | $15,888.05 | $23,791.75 | $1,209,815.00 | $620,723.00 | $95,723.41 | $119,531.40 | $119,531.40 | 31.5% |
| 442 | 1985 | 5 | 31 | 2,065,135 | 8,001.2 | 10,125.6 | 8,001 | 8,065 | $16.24 | $15,888.05 | $23,602.95 | $1,200,183.00 | $864,952.00 | $106,156.55 | $129,775.74 | $129,775.74 | 34.7% |
| 443 | 1985 | 6 | 30 | 0 | 0.0 | 0.0 | 0 | 8,065 | $16.24 | $15,888.05 | $0.00 | $0.00 | $0.00 | $0.00 | $16.24 | $15,888.05 | 0.0% |
| 444 | 1985 | 7 | 31 | 0 | 0.0 | 0.0 | 0 | 8,065 | $16.24 | $15,888.05 | $0.00 | $0.00 | $0.00 | $0.00 | $16.24 | $15,888.05 | 0.0% |
| 445 | 1985 | 8 | 31 | 0 | 0.0 | 0.0 | 0 | 8,065 | $16.24 | $15,888.05 | $0.00 | $0.00 | $0.00 | $0.00 | $16.24 | $15,888.05 | 0.0% |
| 446 | 1985 | 9 | 30 | 0 | 0.0 | 0.0 | 0 | 8,065 | $16.24 | $15,888.05 | $0.00 | $0.00 | $0.00 | $0.00 | $16.24 | $15,888.05 | 0.0% |
| 447 | 1985 | 10 | 31 | 484,524 | 7,282.0 | 9,366.9 | 7,282 | 8,065 | $16.24 | $15,888.05 | $21,481.90 | $1,092,305.00 | $0.00 | $27,167.28 | $48,665.42 | $48,665.42 | 8.9% |
| 448 | 1985 | 11 | 30 | 0 | 0.0 | 0.0 | 0 | 8,065 | $16.24 | $15,888.05 | $0.00 | $0.00 | $0.00 | $0.00 | $16.24 | $15,888.05 | 0.0% |
| 449 | 1985 | 12 | 31 | 1,231,493 | 8,025.7 | 10,150.9 | 8,026 | 8,065 | $16.24 | $15,888.05 | $23,676.70 | $1,203,854.00 | $27,639.00 | $68,741.91 | $92,434.85 | $92,434.85 | 20.6% |
| 450 | 1986 | 1 | 31 | 43,081 | 1,795.0 | 2,361.8 | 1,795 | 8,065 | $16.24 | $15,888.05 | $5,295.25 | $269,254.00 | $0.00 | $2,415.53 | $7,727.02 | $15,888.05 | 3.2% |
| 451 | 1986 | 2 | 28 | 1,395,699 | 7,294.0 | 9,379.7 | 7,294 | 8,065 | $16.24 | $15,888.05 | $21,517.30 | $1,094,093.00 | $301,606.00 | $74,896.95 | $96,430.49 | $96,430.49 | 28.5% |
| 452 | 1986 | 3 | 31 | 449,053 | 6,294.4 | 8,279.7 | 6,294 | 8,065 | $16.24 | $15,888.05 | $18,567.30 | $944,166.00 | $0.00 | $25,178.42 | $43,761.96 | $43,761.96 | 9.6% |
| 453 | 1986 | 4 | 30 | 1,363,779 | 7,333.7 | 9,422.2 | 7,334 | 8,026 | $16.24 | $15,811.22 | $21,635.30 | $1,100,050.00 | $263,729.00 | $73,529.15 | $95,180.69 | $95,180.69 | 25.8% |

Little Bayou Meto
Flood Control Pumping Plant
3000-cfs (2 4000-hp)



| | A | B | C | D | E | F | G | H | I | J | K | L | M | N | O | P | Q |
|---|---|---|---|---|---|---|---|---|---|---|---|---|---|---|---|---|---|
| 1 | | | | | | | | | | Minimum | | | | | | | |
| 2 | | | | | | | | | | Monthly | Billing | | | | | | |
| 3 | | | | Metered | | | Billing | Ratchet | Customer | Demand | Demand | Incremental Energy | | Energy | | | Monthly |
| 4 | Period-of-Record | | | Energy | Demands | | Demand | Demand | Charge | Charge | Charge | Block 1 | Block 2 | Charge | Subtotal Bill | Total Bill | Load |
| 5 | YEAR | MO | DAYS | kWh | kWD | kVAD | kWD | kWD | $16.24 | $1.97 | $2.95 | $0.05607 | $0.04493 | kWh | | | Factor |
| 454 | 1986 | 5 | 31 | 673,012 | 7,345.6 | 9,435.0 | 7,346 | 8,026 | $16.24 | $15,811.22 | $21,670.70 | $1,101,836.00 | $0.00 | $37,735.79 | $59,422.73 | $59,422.73 | 12.3% |
| 455 | 1986 | 6 | 30 | 1,503,175 | 7,863.3 | 9,982.2 | 7,863 | 8,026 | $16.24 | $15,811.22 | $23,195.85 | $1,179,494.00 | $323,681.00 | $80,677.22 | $103,889.31 | $103,889.31 | 26.6% |
| 456 | 1986 | 7 | 31 | 0 | 0.0 | 0.0 | 0 | 8,026 | $16.24 | $15,811.22 | $0.00 | $0.00 | $0.00 | $0.00 | $16.24 | $15,811.22 | 0.0% |
| 457 | 1986 | 8 | 31 | 42,570 | 1,773.7 | 2,337.7 | 1,774 | 8,026 | $16.24 | $15,811.22 | $5,233.30 | $266,060.00 | $0.00 | $2,386.87 | $7,636.41 | $15,811.22 | 3.2% |
| 458 | 1986 | 9 | 30 | 0 | 0.0 | 0.0 | 0 | 8,026 | $16.24 | $15,811.22 | $0.00 | $0.00 | $0.00 | $0.00 | $16.24 | $15,811.22 | 0.0% |
| 459 | 1986 | 10 | 31 | 363,210 | 7,697.0 | 9,808.0 | 7,697 | 8,026 | $16.24 | $15,811.22 | $22,706.15 | $1,154,552.00 | $0.00 | $20,365.21 | $43,087.60 | $43,087.60 | 6.3% |
| 460 | 1986 | 11 | 30 | 842,108 | 7,632.6 | 9,740.1 | 7,633 | 8,026 | $16.24 | $15,811.22 | $22,517.35 | $1,144,884.00 | $0.00 | $47,216.99 | $69,750.58 | $69,750.58 | 15.3% |
| 461 | 1986 | 12 | 31 | 1,434,836 | 7,851.0 | 9,969.4 | 7,851 | 7,863 | $16.24 | $15,490.11 | $23,160.45 | $1,177,652.00 | $257,184.00 | $77,586.22 | $100,762.91 | $100,762.91 | 24.6% |
| 462 | 1987 | 1 | 31 | 0 | 0.0 | 0.0 | 0 | 7,863 | $16.24 | $15,490.11 | $0.00 | $0.00 | $0.00 | $0.00 | $16.24 | $15,490.11 | 0.0% |
| 463 | 1987 | 2 | 28 | 317,175 | 6,700.1 | 8,732.7 | 6,700 | 7,863 | $16.24 | $15,490.11 | $19,765.00 | $1,005,010.00 | $0.00 | $17,784.00 | $37,565.24 | $37,565.24 | 7.0% |
| 464 | 1987 | 3 | 31 | 3,168,249 | 8,251.5 | 10,383.3 | 8,252 | 8,252 | $16.24 | $16,256.44 | $24,343.40 | $1,237,727.00 | $1,930,522.00 | $156,137.71 | $180,497.35 | $180,497.35 | 51.6% |
| 465 | 1987 | 4 | 30 | 710,494 | 7,505.3 | 9,605.4 | 7,505 | 8,252 | $16.24 | $16,256.44 | $22,139.75 | $1,125,802.00 | $0.00 | $39,837.41 | $61,993.40 | $61,993.40 | 13.1% |
| 466 | 1987 | 5 | 31 | 341,265 | 6,235.2 | 8,212.8 | 6,235 | 8,252 | $16.24 | $16,256.44 | $18,393.25 | $935,276.00 | $0.00 | $19,134.74 | $37,544.23 | $37,544.23 | 7.4% |
| 467 | 1987 | 6 | 30 | 2,079,942 | 7,344.3 | 9,433.6 | 7,344 | 8,252 | $16.24 | $16,256.44 | $21,664.80 | $1,101,638.00 | $978,304.00 | $105,724.04 | $127,405.08 | $127,405.08 | 39.3% |
| 468 | 1987 | 7 | 31 | 587,293 | 6,208.1 | 8,182.1 | 6,208 | 8,252 | $16.24 | $16,256.44 | $18,313.60 | $931,209.00 | $0.00 | $32,929.50 | $51,259.34 | $51,259.34 | 12.7% |
| 469 | 1987 | 8 | 31 | 0 | 0.0 | 0.0 | 0 | 8,252 | $16.24 | $16,256.44 | $0.00 | $0.00 | $0.00 | $0.00 | $16.24 | $16,256.44 | 0.0% |
| 470 | 1987 | 9 | 30 | 0 | 0.0 | 0.0 | 0 | 8,252 | $16.24 | $16,256.44 | $0.00 | $0.00 | $0.00 | $0.00 | $16.24 | $16,256.44 | 0.0% |
| 471 | 1987 | 10 | 31 | 0 | 0.0 | 0.0 | 0 | 8,252 | $16.24 | $16,256.44 | $0.00 | $0.00 | $0.00 | $0.00 | $16.24 | $16,256.44 | 0.0% |
| 472 | 1987 | 11 | 30 | 1,097,444 | 6,747.6 | 8,785.1 | 6,748 | 8,252 | $16.24 | $16,256.44 | $19,906.60 | $1,012,140.00 | $85,304.00 | $60,583.40 | $80,506.24 | $80,506.24 | 22.6% |
| 473 | 1987 | 12 | 31 | 1,560,841 | 8,558.2 | 10,694.6 | 8,558 | 8,558 | $16.24 | $16,859.26 | $25,246.10 | $1,283,733.00 | $277,108.00 | $84,429.37 | $109,691.71 | $109,691.71 | 24.5% |
| 474 | 1988 | 1 | 31 | 4,028,451 | 7,872.5 | 9,991.8 | 7,873 | 8,558 | $16.24 | $16,859.26 | $23,225.35 | $1,180,876.00 | $2,847,575.00 | $194,153.26 | $217,394.85 | $217,394.85 | 68.8% |
| 475 | 1988 | 2 | 29 | 0 | 0.0 | 0.0 | 0 | 8,558 | $16.24 | $16,859.26 | $0.00 | $0.00 | $0.00 | $0.00 | $16.24 | $16,859.26 | 0.0% |
| 476 | 1988 | 3 | 31 | 176,484 | 7,353.5 | 9,443.5 | 7,354 | 8,558 | $16.24 | $16,859.26 | $21,694.30 | $1,103,027.00 | $0.00 | $9,895.47 | $31,606.01 | $31,606.01 | 3.2% |
| 477 | 1988 | 4 | 30 | 1,978,740 | 7,686.7 | 9,797.1 | 7,687 | 8,558 | $16.24 | $16,859.26 | $22,676.65 | $1,153,006.00 | $825,734.00 | $101,749.28 | $124,442.17 | $124,442.17 | 35.8% |
| 478 | 1988 | 5 | 31 | 664,030 | 6,208.1 | 8,182.1 | 6,208 | 8,558 | $16.24 | $16,859.26 | $18,313.60 | $931,209.00 | $0.00 | $37,232.18 | $55,562.02 | $55,562.02 | 14.4% |
| 479 | 1988 | 6 | 30 | 85,197 | 1,776.2 | 2,340.5 | 1,776 | 8,558 | $16.24 | $16,859.26 | $5,239.20 | $266,423.00 | $0.00 | $4,777.01 | $10,032.45 | $16,859.26 | 6.7% |
| 480 | 1988 | 7 | 31 | 0 | 0.0 | 0.0 | 0 | 8,558 | $16.24 | $16,859.26 | $0.00 | $0.00 | $0.00 | $0.00 | $16.24 | $16,859.26 | 0.0% |
| 481 | 1988 | 8 | 31 | 0 | 0.0 | 0.0 | 0 | 8,558 | $16.24 | $16,859.26 | $0.00 | $0.00 | $0.00 | $0.00 | $16.24 | $16,859.26 | 0.0% |
| 482 | 1988 | 9 | 30 | 0 | 0.0 | 0.0 | 0 | 8,558 | $16.24 | $16,859.26 | $0.00 | $0.00 | $0.00 | $0.00 | $16.24 | $16,859.26 | 0.0% |
| 483 | 1988 | 10 | 31 | 0 | 0.0 | 0.0 | 0 | 8,558 | $16.24 | $16,859.26 | $0.00 | $0.00 | $0.00 | $0.00 | $16.24 | $16,859.26 | 0.0% |
| 484 | 1988 | 11 | 30 | 1,080,191 | 6,839.2 | 8,886.0 | 6,839 | 8,558 | $16.24 | $16,859.26 | $20,175.05 | $1,025,886.00 | $54,305.00 | $59,961.35 | $80,152.64 | $80,152.64 | 21.9% |
| 485 | 1988 | 12 | 31 | 780,472 | 6,746.0 | 8,783.3 | 6,746 | 7,873 | $16.24 | $15,509.81 | $19,900.70 | $1,011,894.00 | $0.00 | $43,761.07 | $63,678.01 | $63,678.01 | 15.6% |
| 486 | 1989 | 1 | 31 | 2,587,962 | 6,973.7 | 9,033.1 | 6,974 | 7,687 | $16.24 | $15,143.39 | $20,573.30 | $1,046,048.00 | $1,541,914.00 | $127,930.11 | $148,519.65 | $148,519.65 | 49.9% |
| 487 | 1989 | 2 | 28 | 2,554,940 | 7,526.4 | 9,627.8 | 7,526 | 7,687 | $16.24 | $15,143.39 | $22,201.70 | $1,128,964.00 | $1,425,976.00 | $127,370.11 | $149,588.05 | $149,588.05 | 50.5% |
| 488 | 1989 | 3 | 31 | 1,601,014 | 7,716.3 | 9,828.3 | 7,716 | 7,716 | $16.24 | $15,200.52 | $22,762.20 | $1,157,450.00 | $443,564.00 | $84,827.55 | $107,605.99 | $107,605.99 | 27.9% |
| 489 | 1989 | 4 | 30 | 2,099,970 | 7,304.5 | 9,391.0 | 7,305 | 7,716 | $16.24 | $15,200.52 | $21,549.75 | $1,095,682.00 | $1,004,288.00 | $106,557.55 | $128,123.54 | $128,123.54 | 39.9% |
| 490 | 1989 | 5 | 31 | 2,374,735 | 7,407.7 | 9,501.4 | 7,408 | 7,716 | $16.24 | $15,200.52 | $21,853.60 | $1,111,156.00 | $1,263,579.00 | $119,075.12 | $140,944.96 | $140,944.96 | 43.1% |
| 491 | 1989 | 6 | 30 | 1,568,846 | 8,290.2 | 10,422.8 | 8,290 | 8,290 | $16.24 | $16,331.30 | $24,455.50 | $1,243,526.00 | $325,320.00 | $84,341.13 | $108,812.87 | $108,812.87 | 26.3% |
| 492 | 1989 | 7 | 31 | 852,666 | 6,762.3 | 8,801.4 | 6,762 | 8,290 | $16.24 | $16,331.30 | $19,947.90 | $1,014,351.00 | $0.00 | $47,809.00 | $67,773.14 | $67,773.14 | 16.9% |
| 493 | 1989 | 8 | 31 | 0 | 0.0 | 0.0 | 0 | 8,290 | $16.24 | $16,331.30 | $0.00 | $0.00 | $0.00 | $0.00 | $16.24 | $16,331.30 | 0.0% |
| 494 | 1989 | 9 | 30 | 42,906 | 1,787.8 | 2,353.6 | 1,788 | 8,290 | $16.24 | $16,331.30 | $5,274.60 | $268,166.00 | $0.00 | $2,405.77 | $7,696.61 | $16,331.30 | 3.3% |
| 495 | 1989 | 10 | 31 | 0 | 0.0 | 0.0 | 0 | 8,290 | $16.24 | $16,331.30 | $0.00 | $0.00 | $0.00 | $0.00 | $16.24 | $16,331.30 | 0.0% |
| 496 | 1989 | 11 | 30 | 0 | 0.0 | 0.0 | 0 | 8,290 | $16.24 | $16,331.30 | $0.00 | $0.00 | $0.00 | $0.00 | $16.24 | $16,331.30 | 0.0% |
| 497 | 1989 | 12 | 31 | 0 | 0.0 | 0.0 | 0 | 8,290 | $16.24 | $16,331.30 | $0.00 | $0.00 | $0.00 | $0.00 | $16.24 | $16,331.30 | 0.0% |
| 498 | 1990 | 1 | 31 | 911,398 | 7,250.2 | 9,332.7 | 7,250 | 8,290 | $16.24 | $16,331.30 | $21,387.50 | $1,087,534.00 | $0.00 | $51,102.09 | $72,505.83 | $72,505.83 | 16.9% |
| 499 | 1990 | 2 | 28 | 3,211,643 | 7,995.1 | 10,119.2 | 7,995 | 8,290 | $16.24 | $16,331.30 | $23,585.25 | $1,199,265.00 | $2,012,378.00 | $157,658.93 | $181,260.42 | $181,260.42 | 59.8% |
| 500 | 1990 | 3 | 31 | 2,616,278 | 8,650.3 | 10,787.2 | 8,650 | 8,650 | $16.24 | $17,040.50 | $25,517.50 | $1,297,552.00 | $1,318,726.00 | $132,004.10 | $157,537.84 | $157,537.84 | 40.7% |
| 501 | 1990 | 4 | 30 | 3,359,596 | 8,590.3 | 10,726.9 | 8,590 | 8,650 | $16.24 | $17,040.50 | $25,340.50 | $1,288,543.00 | $2,071,053.00 | $165,301.02 | $190,657.76 | $190,657.76 | 54.3% |
| 502 | 1990 | 5 | 31 | 3,236,966 | 8,935.1 | 11,070.6 | 8,935 | 8,935 | $16.24 | $17,601.95 | $26,358.25 | $1,340,267.00 | $1,896,699.00 | $160,367.46 | $186,741.95 | $186,741.95 | 48.7% |
| 503 | 1990 | 6 | 30 | 2,064,564 | 8,449.4 | 10,584.7 | 8,449 | 8,935 | $16.24 | $17,601.95 | $24,924.55 | $1,267,416.00 | $797,148.00 | $106,879.87 | $131,820.66 | $131,820.66 | 33.9% |
| 504 | 1990 | 7 | 31 | 170,278 | 1,773.7 | 2,337.7 | 1,774 | 8,935 | $16.24 | $17,601.95 | $5,233.30 | $266,060.00 | $0.00 | $9,547.49 | $14,797.03 | $17,601.95 | 12.9% |
| 505 | 1990 | 8 | 31 | 0 | 0.0 | 0.0 | 0 | 8,935 | $16.24 | $17,601.95 | $0.00 | $0.00 | $0.00 | $0.00 | $16.24 | $17,601.95 | 0.0% |
| 506 | 1990 | 9 | 30 | 0 | 0.0 | 0.0 | 0 | 8,935 | $16.24 | $17,601.95 | $0.00 | $0.00 | $0.00 | $0.00 | $16.24 | $17,601.95 | 0.0% |
| 507 | 1990 | 10 | 31 | 107,527 | 4,480.3 | 5,896.4 | 4,480 | 8,935 | $16.24 | $17,601.95 | $13,216.00 | $672,047.00 | $0.00 | $6,029.07 | $19,261.31 | $19,261.31 | 3.2% |
| 508 | 1990 | 11 | 30 | 0 | 0.0 | 0.0 | 0 | 8,935 | $16.24 | $17,601.95 | $0.00 | $0.00 | $0.00 | $0.00 | $16.24 | $17,601.95 | 0.0% |
| 509 | 1990 | 12 | 31 | 618,338 | 6,208.1 | 8,182.1 | 6,208 | 8,935 | $16.24 | $17,601.95 | $18,313.60 | $931,209.00 | $0.00 | $34,670.18 | $53,000.02 | $53,000.02 | 13.4% |

Little Bayou Meto
Flood Control Pumping Plant
3000-cfs (2 4000-hp)



| | A | B | C | D | E | F | G | H | I | J | K | L | M | N | O | P | Q |
|---|---|---|---|---|---|---|---|---|---|---|---|---|---|---|---|---|---|
| 1 | | | | | | | | | | Minimum | | | | | | | |
| 2 | | | | | | | | | | Monthly | Billing | | | | | | |
| 3 | | | | Metered | | | Billing | Ratchet | Customer | Demand | Demand | Incremental Energy | | Energy | | | Monthly |
| 4 | Period-of-Record | | | Energy | Demands | | Demand | Demand | Charge | Charge | Charge | Block 1 | Block 2 | Charge | Subtotal Bill | Total Bill | Load |
| 5 | YEAR | MO | DAYS | kWh | kWD | kVAD | kWD | kWD | $16.24 | $1.97 | $2.95 | $0.05607 | $0.04493 | kWh | | | Factor |
| 510 | 1991 | 1 | 31 | 2,055,148 | 7,180.7 | 9,257.7 | 7,181 | 8,935 | $16.24 | $17,601.95 | $21,183.95 | $1,077,102.00 | $978,046.00 | $104,336.72 | $125,536.91 | $125,536.91 | 38.5% |
| 511 | 1991 | 2 | 28 | 546,896 | 4,731.8 | 6,177.9 | 4,732 | 8,935 | $16.24 | $17,601.95 | $13,959.40 | $709,774.00 | $0.00 | $30,664.47 | $44,640.11 | $44,640.11 | 17.2% |
| 512 | 1991 | 3 | 31 | 559,846 | 4,629.9 | 6,064.4 | 4,630 | 8,935 | $16.24 | $17,601.95 | $13,658.50 | $694,486.00 | $0.00 | $31,390.58 | $45,065.32 | $45,065.32 | 16.3% |
| 513 | 1991 | 4 | 30 | 2,844,188 | 7,560.3 | 9,663.6 | 7,560 | 8,935 | $16.24 | $17,601.95 | $22,302.00 | $1,134,039.00 | $1,710,149.00 | $140,422.56 | $162,740.80 | $162,740.80 | 52.3% |
| 514 | 1991 | 5 | 31 | 2,503,585 | 7,171.1 | 9,247.3 | 7,171 | 8,449 | $16.24 | $16,644.53 | $21,154.45 | $1,075,660.00 | $1,427,925.00 | $124,468.93 | $145,639.62 | $145,639.62 | 46.9% |
| 515 | 1991 | 6 | 30 | 362,828 | 4,434.3 | 5,844.4 | 4,434 | 7,560 | $16.24 | $14,893.20 | $13,080.30 | $665,149.00 | $0.00 | $20,343.75 | $33,440.29 | $33,440.29 | 11.4% |
| 516 | 1991 | 7 | 31 | 0 | 0.0 | 0.0 | 0 | 7,560 | $16.24 | $14,893.20 | $0.00 | $0.00 | $0.00 | $0.00 | $16.24 | $14,893.20 | 0.0% |
| 517 | 1991 | 8 | 31 | 0 | 0.0 | 0.0 | 0 | 7,560 | $16.24 | $14,893.20 | $0.00 | $0.00 | $0.00 | $0.00 | $16.24 | $14,893.20 | 0.0% |
| 518 | 1991 | 9 | 30 | 0 | 0.0 | 0.0 | 0 | 7,560 | $16.24 | $14,893.20 | $0.00 | $0.00 | $0.00 | $0.00 | $16.24 | $14,893.20 | 0.0% |
| 519 | 1991 | 10 | 31 | 150,010 | 6,250.4 | 8,230.0 | 6,250 | 7,560 | $16.24 | $14,893.20 | $18,437.50 | $937,563.00 | $0.00 | $8,411.07 | $26,864.81 | $26,864.81 | 3.2% |
| 520 | 1991 | 11 | 30 | 1,635,984 | 7,644.2 | 9,752.3 | 7,644 | 7,644 | $16.24 | $15,058.68 | $22,549.80 | $1,146,626.00 | $489,358.00 | $86,278.17 | $108,844.21 | $108,844.21 | 29.7% |
| 521 | 1991 | 12 | 31 | 2,836,628 | 7,653.2 | 9,761.8 | 7,653 | 7,653 | $16.24 | $15,076.41 | $22,576.35 | $1,147,980.00 | $1,688,648.00 | $140,238.19 | $162,830.78 | $162,830.78 | 49.8% |
| 522 | 1992 | 1 | 31 | 448,159 | 6,257.2 | 8,237.7 | 6,257 | 7,653 | $16.24 | $15,076.41 | $18,458.15 | $938,580.00 | $0.00 | $25,128.30 | $43,602.69 | $43,602.69 | 9.6% |
| 523 | 1992 | 2 | 29 | 150,010 | 6,250.4 | 8,230.0 | 6,250 | 7,653 | $16.24 | $15,076.41 | $18,437.50 | $937,563.00 | $0.00 | $8,411.07 | $26,864.81 | $26,864.81 | 3.4% |
| 524 | 1992 | 3 | 31 | 1,921,986 | 7,111.8 | 9,183.2 | 7,112 | 7,653 | $16.24 | $15,076.41 | $20,980.40 | $1,066,767.00 | $855,219.00 | $98,238.62 | $119,235.26 | $119,235.26 | 36.3% |
| 525 | 1992 | 4 | 30 | 357,544 | 6,660.7 | 8,689.1 | 6,661 | 7,653 | $16.24 | $15,076.41 | $19,649.95 | $999,103.00 | $0.00 | $20,047.49 | $39,713.68 | $39,713.68 | 7.5% |
| 526 | 1992 | 5 | 31 | 919,552 | 6,795.1 | 8,837.5 | 6,795 | 7,653 | $16.24 | $15,076.41 | $20,045.25 | $1,019,262.00 | $0.00 | $51,559.26 | $71,620.75 | $71,620.75 | 18.2% |
| 527 | 1992 | 6 | 30 | 1,876,486 | 7,807.6 | 9,924.1 | 7,808 | 7,808 | $16.24 | $15,381.76 | $23,033.60 | $1,171,147.00 | $705,339.00 | $97,357.09 | $120,406.93 | $120,406.93 | 33.4% |
| 528 | 1992 | 7 | 31 | 1,008,673 | 6,362.1 | 8,355.9 | 6,362 | 7,808 | $16.24 | $15,381.76 | $18,767.90 | $954,311.00 | $54,362.00 | $55,950.70 | $74,734.84 | $74,734.84 | 21.3% |
| 529 | 1992 | 8 | 31 | 0 | 0.0 | 0.0 | 0 | 7,808 | $16.24 | $15,381.76 | $0.00 | $0.00 | $0.00 | $0.00 | $16.24 | $15,381.76 | 0.0% |
| 530 | 1992 | 9 | 30 | 149,957 | 4,434.3 | 5,844.4 | 4,434 | 7,808 | $16.24 | $15,381.76 | $13,080.30 | $665,149.00 | $0.00 | $8,408.08 | $21,504.62 | $21,504.62 | 4.7% |
| 531 | 1992 | 10 | 31 | 0 | 0.0 | 0.0 | 0 | 7,808 | $16.24 | $15,381.76 | $0.00 | $0.00 | $0.00 | $0.00 | $16.24 | $15,381.76 | 0.0% |
| 532 | 1992 | 11 | 30 | 507,011 | 7,509.3 | 9,609.6 | 7,509 | 7,808 | $16.24 | $15,381.76 | $22,151.55 | $1,126,395.00 | $0.00 | $28,428.11 | $50,595.90 | $50,595.90 | 9.4% |
| 533 | 1992 | 12 | 31 | 725,325 | 7,662.2 | 9,771.4 | 7,662 | 7,808 | $16.24 | $15,381.76 | $22,602.90 | $1,149,333.00 | $0.00 | $40,668.95 | $63,288.09 | $63,288.09 | 12.7% |
| 534 | 1993 | 1 | 31 | 1,608,075 | 7,794.8 | 9,910.6 | 7,795 | 7,808 | $16.24 | $15,381.76 | $22,995.25 | $1,169,220.00 | $438,855.00 | $85,275.92 | $108,287.41 | $108,287.41 | 27.7% |
| 535 | 1993 | 2 | 28 | 332,746 | 7,020.3 | 9,083.9 | 7,020 | 7,808 | $16.24 | $15,381.76 | $20,709.00 | $1,053,042.00 | $0.00 | $18,657.08 | $39,382.32 | $39,382.32 | 7.1% |
| 536 | 1993 | 3 | 31 | 673,512 | 7,539.6 | 9,641.7 | 7,540 | 7,808 | $16.24 | $15,381.76 | $22,243.00 | $1,130,938.00 | $0.00 | $37,763.83 | $60,023.07 | $60,023.07 | 12.0% |
| 537 | 1993 | 4 | 30 | 2,603,434 | 8,045.6 | 10,171.5 | 8,046 | 8,046 | $16.24 | $15,850.62 | $23,735.70 | $1,206,835.00 | $1,396,599.00 | $130,416.43 | $154,168.37 | $154,168.37 | 44.9% |
| 538 | 1993 | 5 | 31 | 2,201,497 | 8,177.8 | 10,307.8 | 8,178 | 8,178 | $16.24 | $16,110.66 | $24,125.10 | $1,226,676.00 | $974,821.00 | $112,578.43 | $136,719.77 | $136,719.77 | 36.2% |
| 539 | 1993 | 6 | 30 | 1,068,586 | 7,887.8 | 10,007.8 | 7,888 | 8,178 | $16.24 | $16,110.66 | $23,269.60 | $1,183,177.00 | $0.00 | $59,915.61 | $83,201.45 | $83,201.45 | 18.8% |
| 540 | 1993 | 7 | 31 | 215,768 | 7,054.0 | 9,120.6 | 7,054 | 8,178 | $16.24 | $16,110.66 | $20,809.30 | $1,058,102.00 | $0.00 | $12,098.09 | $32,923.63 | $32,923.63 | 4.1% |
| 541 | 1993 | 8 | 31 | 148,993 | 6,208.1 | 8,182.1 | 6,208 | 8,178 | $16.24 | $16,110.66 | $18,313.60 | $931,209.00 | $0.00 | $8,354.06 | $26,683.90 | $26,683.90 | 3.2% |
| 542 | 1993 | 9 | 30 | 45,234 | 1,884.7 | 2,462.3 | 1,885 | 8,178 | $16.24 | $16,110.66 | $5,560.75 | $282,712.00 | $0.00 | $2,536.27 | $8,113.26 | $16,110.66 | 3.3% |
| 543 | 1993 | 10 | 31 | 148,993 | 6,208.1 | 8,182.1 | 6,208 | 8,178 | $16.24 | $16,110.66 | $18,313.60 | $931,209.00 | $0.00 | $8,354.06 | $26,683.90 | $26,683.90 | 3.2% |
| 544 | 1993 | 11 | 30 | 950,309 | 7,637.7 | 9,745.5 | 7,638 | 8,178 | $16.24 | $16,110.66 | $22,532.10 | $1,145,658.00 | $0.00 | $53,283.83 | $75,832.17 | $75,832.17 | 17.3% |
| 545 | 1993 | 12 | 31 | 1,984,036 | 6,744.3 | 8,781.5 | 6,744 | 8,178 | $16.24 | $16,110.66 | $19,894.80 | $1,011,648.00 | $972,388.00 | $100,412.50 | $120,323.54 | $120,323.54 | 39.5% |
| 546 | 1994 | 1 | 31 | 0 | 0.0 | 0.0 | 0 | 8,178 | $16.24 | $16,110.66 | $0.00 | $0.00 | $0.00 | $0.00 | $16.24 | $16,110.66 | 0.0% |
| 547 | 1994 | 2 | 28 | 928,115 | 7,284.7 | 9,369.7 | 7,285 | 8,178 | $16.24 | $16,110.66 | $21,490.75 | $1,092,702.00 | $0.00 | $52,039.40 | $73,546.39 | $73,546.39 | 19.0% |
| 548 | 1994 | 3 | 31 | 1,678,740 | 7,575.8 | 9,680.1 | 7,576 | 8,178 | $16.24 | $16,110.66 | $22,349.20 | $1,136,365.00 | $542,375.00 | $88,084.89 | $110,450.33 | $110,450.33 | 29.8% |
| 549 | 1994 | 4 | 30 | 1,038,348 | 7,784.5 | 9,899.8 | 7,785 | 8,178 | $16.24 | $16,110.66 | $22,965.75 | $1,167,678.00 | $0.00 | $58,220.18 | $81,202.17 | $81,202.17 | 18.5% |
| 550 | 1994 | 5 | 31 | 2,100,786 | 7,978.3 | 10,101.8 | 7,978 | 7,978 | $16.24 | $15,716.66 | $23,535.10 | $1,196,739.00 | $904,047.00 | $107,719.99 | $131,271.33 | $131,271.33 | 35.4% |
| 551 | 1994 | 6 | 30 | 796,570 | 6,208.1 | 8,182.1 | 6,208 | 7,978 | $16.24 | $15,716.66 | $18,313.60 | $931,209.00 | $0.00 | $44,663.67 | $62,993.51 | $62,993.51 | 17.8% |
| 552 | 1994 | 7 | 31 | 450,477 | 6,287.7 | 8,272.1 | 6,288 | 7,978 | $16.24 | $15,716.66 | $18,549.60 | $943,151.00 | $0.00 | $25,258.24 | $43,824.08 | $43,824.08 | 9.6% |
| 553 | 1994 | 8 | 31 | 0 | 0.0 | 0.0 | 0 | 7,978 | $16.24 | $15,716.66 | $0.00 | $0.00 | $0.00 | $0.00 | $16.24 | $15,716.66 | 0.0% |
| 554 | 1994 | 9 | 30 | 0 | 0.0 | 0.0 | 0 | 7,978 | $16.24 | $15,716.66 | $0.00 | $0.00 | $0.00 | $0.00 | $16.24 | $15,716.66 | 0.0% |
| 555 | 1994 | 10 | 31 | 0 | 0.0 | 0.0 | 0 | 7,978 | $16.24 | $15,716.66 | $0.00 | $0.00 | $0.00 | $0.00 | $16.24 | $15,716.66 | 0.0% |
| 556 | 1994 | 11 | 30 | 193,314 | 8,054.7 | 10,181.0 | 8,055 | 8,055 | $16.24 | $15,868.35 | $23,762.25 | $1,208,210.00 | $0.00 | $10,839.10 | $34,617.59 | $34,617.59 | 3.3% |
| 557 | 1994 | 12 | 31 | 1,280,364 | 7,442.0 | 9,538.0 | 7,442 | 8,055 | $16.24 | $15,868.35 | $21,953.90 | $1,116,305.00 | $164,059.00 | $69,962.39 | $91,932.53 | $91,932.53 | 23.1% |
| 558 | 1995 | 1 | 31 | 1,150,077 | 7,707.3 | 9,818.8 | 7,707 | 8,055 | $16.24 | $15,868.35 | $22,735.65 | $1,156,098.00 | $0.00 | $64,484.79 | $87,236.68 | $87,236.68 | 20.1% |
| 559 | 1995 | 2 | 28 | 155,241 | 6,468.4 | 8,475.1 | 6,468 | 8,055 | $16.24 | $15,868.35 | $19,080.60 | $970,258.00 | $0.00 | $8,704.38 | $27,801.22 | $27,801.22 | 3.6% |
| 560 | 1995 | 3 | 31 | 1,175,249 | 6,898.0 | 8,950.4 | 6,898 | 8,055 | $16.24 | $15,868.35 | $20,349.10 | $1,034,697.00 | $140,552.00 | $64,330.46 | $84,695.80 | $84,695.80 | 22.9% |
| 561 | 1995 | 4 | 30 | 1,667,814 | 7,967.5 | 10,090.7 | 7,968 | 8,055 | $16.24 | $15,868.35 | $23,505.60 | $1,195,132.00 | $472,682.00 | $88,248.65 | $111,770.49 | $111,770.49 | 29.1% |
| 562 | 1995 | 5 | 31 | 1,247,468 | 8,051.7 | 10,177.8 | 8,052 | 8,055 | $16.24 | $15,868.35 | $23,753.40 | $1,207,752.00 | $39,716.00 | $69,503.09 | $93,272.73 | $93,272.73 | 20.8% |
| 563 | 1995 | 6 | 30 | 196,388 | 8,182.8 | 10,312.9 | 8,183 | 8,183 | $16.24 | $16,120.51 | $24,139.85 | $1,227,425.00 | $0.00 | $11,011.48 | $35,167.57 | $35,167.57 | 3.3% |
| 564 | 1995 | 7 | 31 | 376,043 | 7,840.3 | 9,958.2 | 7,840 | 8,183 | $16.24 | $16,120.51 | $23,128.00 | $1,176,040.00 | $0.00 | $21,084.75 | $44,228.99 | $44,228.99 | 6.4% |
| 565 | 1995 | 8 | 31 | 43,336 | 1,805.7 | 2,373.8 | 1,806 | 8,183 | $16.24 | $16,120.51 | $5,327.70 | $270,849.00 | $0.00 | $2,429.84 | $7,773.78 | $16,120.51 | 3.2% |

Little Bayou Meto
Flood Control Pumping Plant
3000-cfs (2 4000-hp)



| | A | B | C | D | E | F | G | H | I | J | K | L | M | N | O | P | Q |
|---|---|---|---|---|---|---|---|---|---|---|---|---|---|---|---|---|---|
| 1 | | | | | | | | | | Minimum | | | | | | | |
| 2 | | | | | | | | | | Monthly | Billing | | | | | | |
| 3 | | | | Metered | | | Billing | Ratchet | Customer | Demand | Demand | Incremental Energy | | Energy | | | Monthly |
| 4 | Period-of-Record | | | Energy | Demands | | Demand | Demand | Charge | Charge | Charge | Block 1 | Block 2 | Charge | Subtotal Bill | Total Bill | Load |
| 5 | YEAR | MO | DAYS | kWh | kWD | kVAD | kWD | kWD | $16.24 | $1.97 | $2.95 | $0.05607 | $0.04493 | kWh | | | Factor |
| 566 | 1995 | 9 | 30 | 0 | 0.0 | 0.0 | 0 | 8,183 | $16.24 | $16,120.51 | $0.00 | $0.00 | $0.00 | $0.00 | $16.24 | $16,120.51 | 0.0% |
| 567 | 1995 | 10 | 31 | 0 | 0.0 | 0.0 | 0 | 8,183 | $16.24 | $16,120.51 | $0.00 | $0.00 | $0.00 | $0.00 | $16.24 | $16,120.51 | 0.0% |
| 568 | 1995 | 11 | 30 | 0 | 0.0 | 0.0 | 0 | 8,183 | $16.24 | $16,120.51 | $0.00 | $0.00 | $0.00 | $0.00 | $16.24 | $16,120.51 | 0.0% |
| 569 | 1995 | 12 | 31 | 0 | 0.0 | 0.0 | 0 | 8,183 | $16.24 | $16,120.51 | $0.00 | $0.00 | $0.00 | $0.00 | $16.24 | $16,120.51 | 0.0% |
| 570 | 1996 | 1 | 31 | 0 | 0.0 | 0.0 | 0 | 8,183 | $16.24 | $16,120.51 | $0.00 | $0.00 | $0.00 | $0.00 | $16.24 | $16,120.51 | 0.0% |
| 571 | 1996 | 2 | 29 | 0 | 0.0 | 0.0 | 0 | 8,183 | $16.24 | $16,120.51 | $0.00 | $0.00 | $0.00 | $0.00 | $16.24 | $16,120.51 | 0.0% |
| 572 | 1996 | 3 | 31 | 43,869 | 1,827.9 | 2,398.8 | 1,828 | 8,183 | $16.24 | $16,120.51 | $5,392.60 | $274,180.00 | $0.00 | $2,459.73 | $7,868.57 | $16,120.51 | 3.2% |
| 573 | 1996 | 4 | 30 | 425,955 | 7,094.1 | 9,164.1 | 7,094 | 8,183 | $16.24 | $16,120.51 | $20,927.30 | $1,064,120.00 | $0.00 | $23,883.32 | $44,826.86 | $44,826.86 | 8.3% |
| 574 | 1996 | 5 | 31 | 905,874 | 6,208.1 | 8,182.1 | 6,208 | 8,183 | $16.24 | $16,120.51 | $18,313.60 | $931,209.00 | $0.00 | $50,792.35 | $69,122.19 | $69,122.19 | 19.6% |
| 575 | 1996 | 6 | 30 | 538,605 | 6,287.7 | 8,272.1 | 6,288 | 7,840 | $16.24 | $15,444.80 | $18,549.60 | $943,151.00 | $0.00 | $30,199.56 | $48,765.40 | $48,765.40 | 11.9% |
| 576 | 1996 | 7 | 31 | 0 | 0.0 | 0.0 | 0 | 7,094 | $16.24 | $13,975.18 | $0.00 | $0.00 | $0.00 | $0.00 | $16.24 | $13,975.18 | 0.0% |
| 577 | 1996 | 8 | 31 | 532,944 | 4,461.0 | 5,874.5 | 4,461 | 7,094 | $16.24 | $13,975.18 | $13,159.95 | $669,144.00 | $0.00 | $29,882.19 | $43,058.38 | $43,058.38 | 16.1% |
| 578 | 1996 | 9 | 30 | 151,270 | 6,302.9 | 8,289.3 | 6,303 | 7,094 | $16.24 | $13,975.18 | $18,593.85 | $945,435.00 | $0.00 | $8,481.69 | $27,091.78 | $27,091.78 | 3.3% |
| 579 | 1996 | 10 | 31 | 482,557 | 7,235.1 | 9,316.4 | 7,235 | 7,235 | $16.24 | $14,252.95 | $21,343.25 | $1,085,262.00 | $0.00 | $27,056.99 | $48,416.48 | $48,416.48 | 9.0% |
| 580 | 1996 | 11 | 30 | 693,198 | 7,979.8 | 10,103.4 | 7,980 | 7,980 | $16.24 | $15,720.60 | $23,541.00 | $1,196,969.00 | $0.00 | $38,867.60 | $62,424.84 | $62,424.84 | 12.1% |
| 581 | 1996 | 12 | 31 | 1,373,140 | 7,779.4 | 9,894.5 | 7,779 | 7,980 | $16.24 | $15,720.60 | $22,948.05 | $1,166,906.00 | $206,234.00 | $74,694.51 | $97,658.80 | $97,658.80 | 23.7% |
| 582 | 1997 | 1 | 31 | 425,951 | 6,208.1 | 8,182.1 | 6,208 | 7,980 | $16.24 | $15,720.60 | $18,313.60 | $931,209.00 | $0.00 | $23,883.07 | $42,212.91 | $42,212.91 | 9.2% |
| 583 | 1997 | 2 | 28 | 1,598,161 | 7,534.3 | 9,636.1 | 7,534 | 7,980 | $16.24 | $15,720.60 | $22,225.30 | $1,130,150.00 | $468,011.00 | $84,395.24 | $106,636.78 | $106,636.78 | 31.6% |
| 584 | 1997 | 3 | 31 | 3,556,481 | 7,766.5 | 9,881.0 | 7,767 | 7,980 | $16.24 | $15,720.60 | $22,912.65 | $1,164,977.00 | $2,391,504.00 | $172,770.54 | $195,699.43 | $195,699.43 | 61.5% |
| 585 | 1997 | 4 | 30 | 2,893,665 | 7,765.2 | 9,879.6 | 7,765 | 7,980 | $16.24 | $15,720.60 | $22,906.75 | $1,164,785.00 | $1,728,880.00 | $142,988.07 | $165,911.06 | $165,911.06 | 51.8% |
| 586 | 1997 | 5 | 31 | 1,643,920 | 6,416.1 | 8,416.5 | 6,416 | 7,980 | $16.24 | $15,720.60 | $18,927.20 | $962,416.00 | $681,504.00 | $84,582.64 | $103,526.08 | $103,526.08 | 34.4% |
| 587 | 1997 | 6 | 30 | 1,441,029 | 7,309.8 | 9,396.7 | 7,310 | 7,980 | $16.24 | $15,720.60 | $21,564.50 | $1,096,477.00 | $344,552.00 | $76,960.19 | $98,540.93 | $98,540.93 | 27.4% |
| 588 | 1997 | 7 | 31 | 744,967 | 6,208.1 | 8,182.1 | 6,208 | 7,980 | $16.24 | $15,720.60 | $18,313.60 | $931,209.00 | $0.00 | $41,770.29 | $60,100.13 | $60,100.13 | 16.1% |
| 589 | 1997 | 8 | 31 | 87,871 | 1,887.6 | 2,465.4 | 1,888 | 7,980 | $16.24 | $15,720.60 | $5,569.60 | $283,135.00 | $0.00 | $4,926.94 | $10,512.78 | $15,720.60 | 6.3% |
| 590 | 1997 | 9 | 30 | 89,086 | 1,938.2 | 2,521.4 | 1,938 | 7,980 | $16.24 | $15,720.60 | $5,717.10 | $290,727.00 | $0.00 | $4,995.04 | $10,728.38 | $15,720.60 | 6.4% |
| 591 | 1997 | 10 | 31 | 106,424 | 4,434.3 | 5,844.4 | 4,434 | 7,980 | $16.24 | $15,720.60 | $13,080.30 | $665,149.00 | $0.00 | $5,967.18 | $19,063.72 | $19,063.72 | 3.2% |
| 592 | 1997 | 11 | 30 | 0 | 0.0 | 0.0 | 0 | 7,779 | $16.24 | $15,324.63 | $0.00 | $0.00 | $0.00 | $0.00 | $16.24 | $15,324.63 | 0.0% |
| 593 | 1997 | 12 | 31 | 679,355 | 7,307.2 | 9,393.9 | 7,307 | 7,767 | $16.24 | $15,300.99 | $21,555.65 | $1,096,079.00 | $0.00 | $38,091.44 | $59,663.33 | $59,663.33 | 12.5% |
| 594 | 1998 | 1 | 31 | 0 | 0.0 | 0.0 | 0 | 7,767 | $16.24 | $15,300.99 | $0.00 | $0.00 | $0.00 | $0.00 | $16.24 | $15,300.99 | 0.0% |
| 595 | | | | | | | | | | | | | | | | | |
| 596 | MONTHS | 589 | SUM | 336,794,569 | #N/A | #N/A | #N/A | #N/A | $9,565.36 | $8,459,438.07 | $5,663,053.05 | $287,952,907.00 | $117,109,751.00 | $17,579,468.66 | $23,252,087.07 | $27,130,148.48 | #N/A |
| 597 | YEARS | 49.08 | MIN | 0 | 0.0 | 0.0 | 0 | 0 | $16.24 | $0.00 | $0.00 | $0.00 | $0.00 | $0.00 | $16.24 | $16.24 | 0.0% |
| 598 | DAYS | 17,928 | AVG | 571,807 | 3,259.2 | 4,202.3 | 3,259 | 7,291 | $16.24 | $14,362.37 | $9,614.69 | $488,884.39 | $198,828.10 | $29,846.30 | $39,477.23 | $46,061.37 | 11.7% |
| 599 | kHOURS | 430.3 | MAX | 4,562,550 | 8,935.1 | 11,070.6 | 8,935 | 8,935 | $16.24 | $17,601.95 | $26,358.25 | $1,340,267.00 | $3,364,663.00 | $218,339.83 | $241,914.77 | $241,914.77 | 76.8% |
| 600 | | | ANNUAL | 6,861,689 | #N/A | #N/A | #N/A | #N/A | $194.88 | $172,348.48 | $115,376.29 | $5,866,612.71 | $2,385,937.20 | $358,155.56 | $473,726.73 | $552,736.47 | #N/A |
| 601 | | | | | | | | | | | | | | | | Lifetime LF: | 8.8% |

# BAYOU METO COMPREHENSIVE STUDY
# BAYOU METO BASIN, ARKANSAS

## APPENDIX C

## ENGINEERING INVESTIGATIONS & ANALYSES
## FLOOD CONTROL COMPONENT

## SECTION V

## RELOCATIONS

Appendix C - Engineering Investigations & Analyses
Flood Control Component

Section V - Relocations

TABLE OF CONTENTS


| Paragaraph | Title | Page No. |
|---|---|---|
| V-1 | General | V-1 |
| V-1-a | Purpose | V-1 |
| V-1-b | Criteria for Relocated Facilities | V-1 |
| V-1-c | Estimates | V-1 |
| V-2 | Roads and Bridges | V-1 |
| V-2-a | Arkansas State Highway 70 Bridge | V-1 |
| V-2-b | Arkansas State Highway 88 Bridge | V-2 |
| V-2-c | Private Bridge | V-2 |
| V-2-d | Wrape Plantation Road Bridge | V-2 |
| V-3 | Railroads | V-2 |
| V-4 | Utilities | V-2 |
| V-4-a | Powerlines | V-2 |
| V-4-a-1 | BBMDC (Mile 2.4) | V-2 |
| V-4-a-2 | LBMCC (Mile 1.45) | V-2 |
| V-4-a-3 | LBMCC (Mile 5.5) | V-3 |
| V-4-b | Telephone Lines | V-3 |
| V-4-b-1 | BBMDC (Mile 2.4) | V-3 |
| V-4-b-2 | LBMCC (Mile 1.45) | V-3 |
| V-4-b-3 | LBMCC (Mile 5.5) | V-3 |
| V-4-c | Pipelines | V-4 |
| V-4-c-1 | BBMDC (Mile 2.4) | V-4 |
| V-4-c-2 | LBMCC (Mile 1.45) | V-4 |
| V-5 | Summary and Comparison of Costs | V-4 |
| V-5-a | Alternative 2 | V-4 |
| V-5-b | Alternative 2A | V-4 |
| V-5-c | Alternative 3A | V-4 |
| V-5-d | Alternative 3B | V-4 |
| V-5-e | Comparison of Relocation Costs | V-5 |

Appendix C - Engineering Investigations & Analyses
Flood Control Component

Section V - Relocations

LIST OF PLATES


| Plate No. | Title |
|---|---|
| V-01 | Map Showing Location of Bridge Relocation, Proposed Big Bayou Meto Diversion Channel |
| V-02 | Map Showing Locations of Bridge Relocations, Little Bayou Meto Connection Channel |

Appendix C - Engineering Investigations & Analyses
Flood Control Component

## SECTION V - RELOCATIONS

V-1. GENERAL. The public facility data for this section were compiled through field reconnaissance and investigations, aerial photographs, engineering drawings, maps and conversations with facility owners and local residents.

V-1-a. Purpose. The purpose of the relocations studies included in this report is to identify the public road, bridge and utility facilities which will be impacted by the flood control component of the Bayou Meto Project, and to establish a basis for an estimate of the cost of providing for the continuing function of those facilities requiring relocation and/or alteration to permit the construction of the project.

V-1-b. Criteria for Relocated Facilities. New or replacement bridge designs would be based upon current Arkansas State Highway Department and county road standards. Relocated utilities would be of the same number of lines, types and capacities of the existing utilities.

V-1-c. Estimates. The estimates for the relocation of affected facilities were developed on the basis of field investigations at the site of each facility; the best available current unit prices; estimates from facility owners; and, cost records of similar relocation work previously performed in the project vicinity.

V-2. ROADS AND BRIDGES.

V-2-a. Arkansas State Highway 70 Bridge. Each of the alternative improvement plans (Alternatives 2, 2A, 3A, and 3B) will require construction of a highway bridge and approaches near channel mile 2.4, where the proposed Big Bayou Meto Diversion Channel is to be constructed across Highway 70. Plate No. V-01 shows the location of the Highway 70 crossing. The estimated cost of constructing the bridge and approaches for each alternative is $645,000.

V-2-b. Arkansas State Highway 88 Bridge. This bridge, located near mile 1.45 on Little Bayou Meto Connection Channel, will require replacement to permit the channel enlargement planned under Alternatives 3A and 3B. The location of the bridge is shown in Plate No. V-02. The estimated cost of replacing the bridge for Alternative 3A is $329,000, and for Alternative 3B is $389,800.

V-2-c. Private Bridge. This bridge off Reydel Road crosses the Little Bayou Meto Connection Channel near mile 2.3 and will need to be removed or replaced to allow the channel enlargement planned for Alternatives 3A and 3B. The bridge location is shown on Plate No. V-02. Since the bridge is privately owned, its disposition is a real estate matter. Therefore, the cost of resolving its conflict with the planned channel work will be included in the Lands and Damages estimates for Alternates 3A and 3B.

V-2-d. Wrape Plantation Road Bridge. This Jefferson County, Arkansas bridge crosses the Little Bayou Meto Connection Channel near mile 5.5 and will require replacement to provide for the channel enlargement planned for Alternatives 3A and 3B. Plate No. V-02 contains a map showing the bridge location. The cost of replacing the bridge for the Alternative 3A channel is estimated at $238,000, and $290,000 for Alternative 3B.

V-3 RAILROADS. No railway bridges, railway lines or embankments will be affected by any of the alternative plans for the flood control project.

V-4 UTILITIES.

V-4-a. Powerlines.

V-4-a-1. Big Bayou Meto Diversion Channel (Mile 2.4). A 4-wire, electric powerline lies parallel and adjacent to Arkansas State Highway 70. This powerline will interfere with the construction of the proposed Big Bayou Meto Diversion Channel at this location and will require relocation for Alternatives 2, 2A, 3A and 3B. The estimated cost of altering the powerline for each alternative is $18,690.

V-4-a-2. Little Bayou Meto Connection Channel(Mile 1.45). A 3-wire, electric powerline crosses the connection channel in the vicinity of the State Highway 88 bridge

crossing that will require relocation to allow the channel enlargement activities planned under Alternatives 3A and 3B of the flood control project. The cost of relocating the powerline is estimated at $17,000 for each alternative.

V-4-a-3. Little Bayou Meto Connection Channel (Mile 5.5). A 3-wire, electric powerline crossing the connection channel near the Wrape Plantation Road bridge crossing at this location will need alteration. The powerline work is necessary to avoid interference with the channel enlargement planned for Alternatives 3A and 3B. The estimated cost of the powerline work for each alternative plan is $17,000.

V-4-b. Telephone Cables.

V-4-b-1. Big Bayou Meto Diversion Channel (Mile 2.4). A buried telephone cable lying in the ditch along Arkansas State Highway 70 will have to be relocated to permit the construction of the diversion channel at this location. The telephone cable will require relocation for each of the alternative flood control plans, and the estimated relocation cost is $12,460 for each. An underground fiber optic cable also lies in the path of the proposed diversion channel in this vicinity and will need to be lowered to allow channel construction. This cable will also require relocation to permit construction of each of the alternative plans. The estimated relocation cost for each plan is $82,770.

V-4-b-2. Little Bayou Meto Connection Channel (Mile 1.45). An underground telephone cable crosses the connection channel near the Highway 88 bridge at this location. The cable crossing will require alteration to provide clearance for the channel enlargement work planned for flood control Alternatives 3A and 3B. The estimated cost of the telephone cable alteration is $11,100 for each alternative.

V-4-b-3. Little Bayou Meto Connection Channel (Mile 5.5). The telephone cable crossing under the connection channel near the Wrape Plantation Road bridge at this location will require relocation to provide clearance for the channel enlargement work planned for under flood control Alternatives 3A and 3B. The estimated cost of the

telephone cable relocation work is $11,100 for each alternative.

V-4-c. Pipelines.

V-4-c-1. Big Bayou Meto Diversion Channel (Mile 2.4). A natural gas pipeline and a waterline buried in the roadside ditch along Arkansas State Highway 70 will require relocation to allow construction of the proposed diversion channel through the highway at this location. The pipelines will require relocation for each of the flood control alternative plans. The estimated relocation cost for the gas pipeline is $7,740, and the waterline relocation is estimated to be $5,340.

V-4-c-2. Little Bayou Meto Connection Channel (Mile 1.45). A waterline crossing under the connection channel at the site of the Arkansas State Highway 88 bridge at this location will require relocation. Its relocation is necessary to resolve its conflict with construction of the proposed channel enlargement under Alternative plans 3A and 3B. The estimated cost of the waterline relocation work is $4,000 for each alternative.

V-5. SUMMARY AND COMPARISON OF RELOCATION COSTS

V-5-a. Alternative 2. The improvements for this plan will require construction of one bridge, and the relocation or alteration of one powerline, one waterline, one natural gas pipeline, one telephone cable and one fiber optic cable. The estimated cost of the relocation activities for this alternative is $772,000.

V-5-b. Alternative 2A. The relocation requirements and associated costs for this plan are the same as shown for Alternate A, above.

V-5-c. Alternative 3A. The planned improvements will require construction and/or replacement of three bridges, and the relocation or alteration of three powerlines, two waterlines, one gas pipeline, three telephone cables and one fiber optic cable. The total estimated cost of relocations for this alternative is $1,399,200.

V-5-d. Alternative 3B. Construction of this alternative will require the construction and/or replacement of three bridges, and the relocation or alteration of three

powerlines, two waterlines, one gas pipeline, three telephone lines and one fiber optic cable. The total estimated cost of the relocations for this alternative is $1,512,000.

V-5-e. Comparison of Relocation Costs. A comparison of the cost of relocating public facilities for the various plans of improvement is listed below.

| ALTERNATIVE | ITEM | DESCRIPTION | COST ESTIMATE ($) |
|---|---|---|---|
| 2 | 8 | Bridge | 645,000 |
| | | Utilities | 127,000 |
| | | TOTAL | 772,000 |
| 2A | 8 | Bridge | 645,000 |
| | | Utilities | 127,000 |
| | | TOTAL | 772,000 |
| 3A | 2 | 2 Bridges | 567,000 |
| | | Utilities | 60,200 |
| | | subtotal | 627,200 |
| | 9 | Bridge | 645,000 |
| | | Utilities | 127,000 |
| | | subtotal | 772,000 |
| | | TOTAL | 1,399,200 |
| 3B | 2 | 2 Bridges | 679,800 |
| | | Utilities | 60,200 |
| | | subtotal | 740,000 |
| | 9 | Bridge | 645,000 |
| | | Utilities | 127,000 |
| | | subtotal | 772,000 |
| | | TOTAL | 1,512,000 |

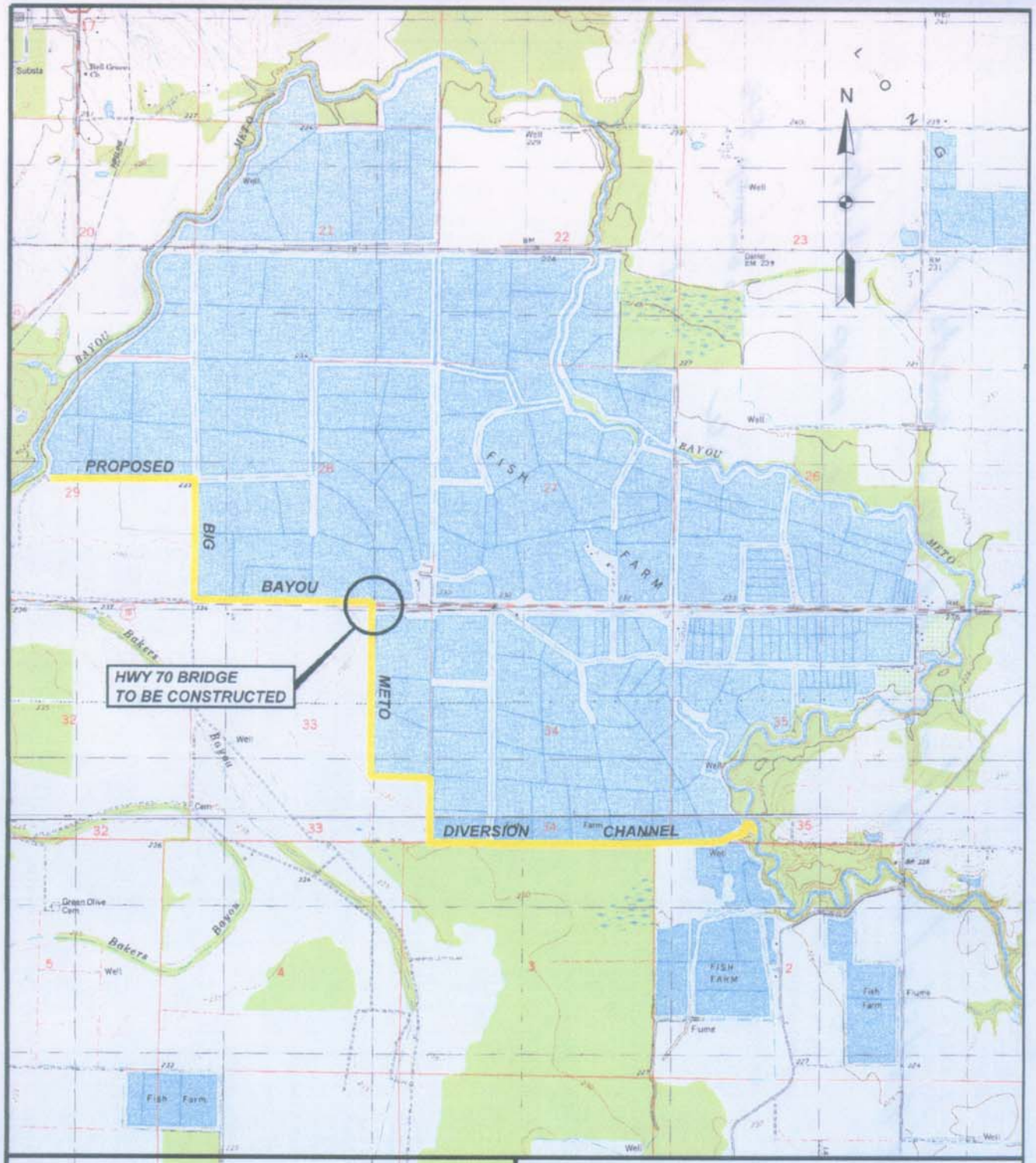


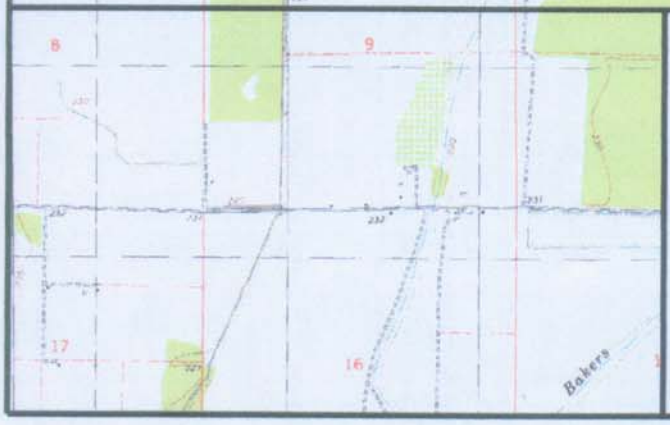


BAYOU METO BASIN, ARKANSAS

GENERAL REEVALUATION REPORT
APPENDIX C
SECTION V – RELOCATIONS

# LOCATION MAP

U. S. ARMY ENGINEER DISTRICT, VICKSBURG
CORPS OF ENGINEERS
VICKSBURG, MISSISSIPPI
MAY 2003

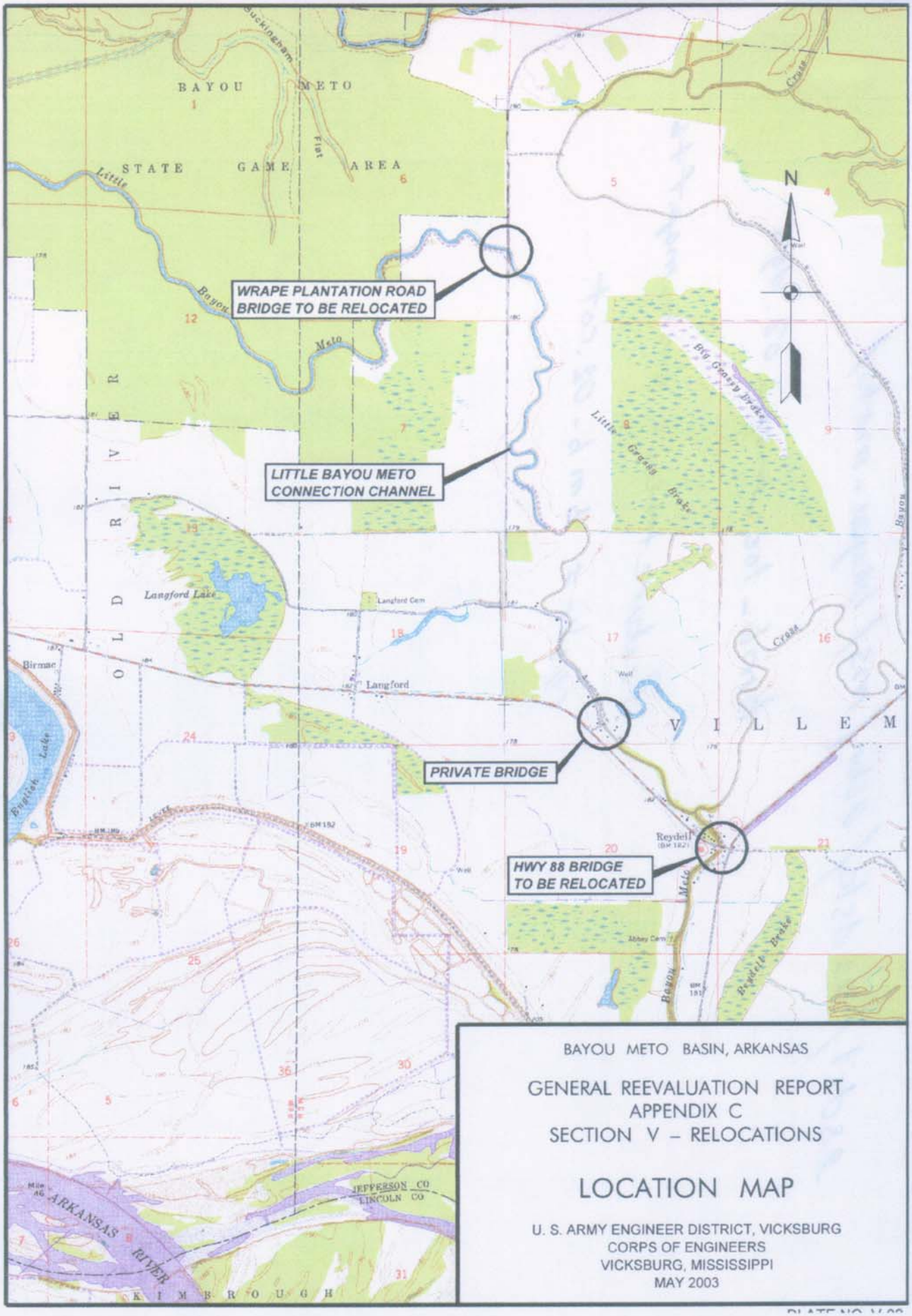


BAYOU METO BASIN, ARKANSAS

GENERAL REEVALUATION REPORT
APPENDIX C
SECTION V – RELOCATIONS

# LOCATION MAP

U. S. ARMY ENGINEER DISTRICT, VICKSBURG
CORPS OF ENGINEERS
VICKSBURG, MISSISSIPPI
MAY 2003

# BAYOU METO COMPREHENSIVE STUDY
# BAYOU METO BASIN, ARKANSAS

## APPENDIX C

## ENGINEERING INVESTIGATIONS & ANALYSES
## FLOOD CONTROL COMPONENT

## SECTION VI

## GEOSPATIAL

Appendix C - Engineering Investigations & Analyses
Flood Control Component

Section VI - Geospatial

**SEE APPENDIX C, ENGINEERING INVESTIGATIONS AND ANALYSES, FLOOD CONTROL COMPONENT, VOLUME 8, SECTION I, HYDROLOGY AND HYDRAULICS, PARAGRAPHS I-13 THROUGH I-15, FOR GEOSPATIAL METHODOLOGY AND TECHNIQUES USED IN THIS STUDY.**

# BAYOU METO COMPREHENSIVE STUDY
# BAYOU METO BASIN, ARKANSAS

## APPENDIX C

## ENGINEERING INVESTIGATIONS & ANALYSES
## FLOOD CONTROL COMPONENT

# SECTION VII

## COST ENGINEERING REPORT

# Appendix C - Engineering Investigations & Analyses
## Flood Control Component

## Section VII - Cost Engineering Report

**Revisions to the Flood Control Component Cost Estimate**

The following Flood Control Component cost estimate (October 2005 price levels) reflects items that are included in the recommended flood control plan (2A) as well as some features in the recommended waterfowl plan. Items 1 and 2, the Little Bayou Meto Pump Station and Connecting Channel, are justified as part of the waterfowl plan along with Item 7, Salt Bayou Channel. Item 3 Boggy Slough includes some features that are included in the recommended flood control plan and some from the recommended waterfowl plan. The remaining items are associated strictly with the recommended flood control plan.

Bayou Meto Selected Plan

Designed By: CELMK
Estimated By: CELMK-ED-CC

Prepared By: Phillip G. Hegwood
Chief, Cost Engineering Section

Preparation Date: 10/01/05
Effective Date of Pricing: 10/01/05

Sales Tax: 0.00%

This report is not copyrighted, but the information
contained herein is For Official Use Only.

M C A C E S G O L D E D I T I O N
Composer GOLD Software Copyright (c) 1985-2000
by Building Systems Design, Inc.
Release 5.31

** PROJECT OWNER SUMMARY Contract **

| | | QUANTY | UOM | CONTRACT COST | CONTINGN | ESCALATN | TOTAL COST |
|---|---|---|---|---|---|---|---|
| | | | | 8939363 | 2145509 | | |
| 01 | Little Bayou Meto 1000 CFS Pump | 1.00 | EA | 17,879,706 | 4,299,798 | 1,451,855 | 23,631,359 |
| | | | | 3900441 | 335775 | | |
| 02 | Item No. 2, Little Bayou Meto CC | 1.00 | EA | 7,800,881 | 1,677,551 | 615,216 | 10,093,648 |
| 03 | Item No. 3, Boggy Slough | 1.00 | EA | 4,254,584 | 846,932 | 498,397 | 5,599,913 |
| 04 | Item No. 4, Wabbaseka Bayou Chan | 1.00 | EA | 3,106,428 | 651,610 | 494,051 | 4,252,089 |
| 05 | Item No. 5, Indian Bayou Ditch | 1.00 | EA | 1,743,153 | 315,509 | 424,708 | 2,483,370 |
| 06 | Item No. 6, Indian Bayou Channel | 1.00 | EA | 2,513,772 | 502,068 | 624,306 | 3,640,146 |
| 07 | Item No. 7, Salt Bayou Channel | 1.00 | EA | 1,327,610 | 248,640 | 333,754 | 1,910,004 |
| 08 | Item No. 8, Crooked Creek | 1.00 | EA | 3,648,534 | 737,017 | 826,747 | 5,212,298 |
| 09 | Item No. 9, Big Bayou Meto Div. | 1.00 | EA | 4,812,919 | 982,336 | 909,105 | 6,704,360 |
| 10 | Item No. 10, Mitigation | 1.00 | EA | 3,565,762 | 761,761 | 233,769 | 4,561,292 |
| TOTAL | Bayou Meto Selected Plan | 1.00 | EA | 50,653,349 | 11,023,222 | 6,411,908 | 68,088,479 |
| | | | | 37513165 | 8031578 | | |
| | | | | 4 1 3 7 4 3 | | | |

** PROJECT OWNER SUMMARY - Feature **

| | QUANTY | UOM | CONTRACT COST | CONTINGN | ESCALATN | TOTAL COST |
|---|---|---|---|---|---|---|
| 01 Little Bayou Meto 1000 CFS Pump | | | | | | |
| 01.01 Lands and Damages | 1.00 | EA | 39,995 | 10,170 | 2,103 | 52,268 |
| 01.15 Pumping Plant | 1.00 | EA | 13,959,326 | 3,489,832 | 933,530 | 18,382,688 |
| 01.30 Planning, Engineering and Design | 1.00 | EA | 2,177,385 | 544,346 | 189,160 | 2,910,892 |
| 01.31 Construction Management | 1.00 | EA | 1,703,000 | 255,450 | 327,061 | 2,285,511 |
| TOTAL Little Bayou Meto 1000 CFS Pump | 1.00 | EA | 17,879,706 | 4,299,798 | 1,451,855 | 23,631,359 |
| 02 Item No. 2, Little Bayou Meto CC | | | | | | |
| 02.01 Lands and Damages | 1.00 | EA | 310,570 | 78,170 | 11,828 | 400,568 |
| 02.02 Relocations | 1.00 | EA | 515,200 | 112,000 | 50,803 | 678,003 |
| 02.09 Channels and Canals | 1.00 | EA | 3,896,525 | 974,131 | 255,709 | 5,126,365 |
| 02.11 Levees and Floodwalls | 1.00 | EA | 293,610 | 73,403 | 19,268 | 386,281 |
| 02.15 Floodway Control & Diversion Str | 1.00 | EA | 687,667 | 171,917 | 45,128 | 904,711 |
| 02.30 Planning, Engineering and Design | 1.00 | EA | 1,515,309 | 151,531 | 115,845 | 1,782,685 |
| 02.31 Construction Management | 1.00 | EA | 582,000 | 116,400 | 116,633 | 815,033 |
| TOTAL Item No. 2, Little Bayou Meto CC | 1.00 | EA | 7,800,881 | 1,677,551 | 615,216 | 10,093,648 |
| 03 Item No. 3, Boggy Slough | | | | | | |
| 03.01 Lands and Damages | 1.00 | EA | 67,795 | 17,170 | 4,600 | 89,565 |
| 03.09 Channels and Canals | 1.00 | EA | 1,691,897 | 422,974 | 152,271 | 2,267,142 |
| 03.11 Levees and Floodwalls | 1.00 | EA | 275,117 | 68,779 | 24,760 | 368,656 |
| 03.15 Floodway Control & Diversion Str | 1.00 | EA | 575,872 | 143,968 | 51,828 | 771,668 |
| 03.30 Planning, Engineering and Design | 1.00 | EA | 1,347,403 | 134,740 | 184,527 | 1,666,670 |
| 03.31 Construction Management | 1.00 | EA | 296,500 | 59,300 | 80,411 | 436,211 |
| TOTAL Item No. 3, Boggy Slough | 1.00 | EA | 4,254,584 | 846,932 | 498,397 | 5,599,913 |
| 04 Item No. 4, Wabbaseka Bayou Chan | | | | | | |
| 04.01 Lands and Damages | 1.00 | EA | 552,130 | 137,760 | 81,848 | 771,738 |
| 04.09 Channels and Canals | 1.00 | EA | 1,601,805 | 400,451 | 201,227 | 2,203,482 |
| 04.30 Planning, Engineering and Design | 1.00 | EA | 770,993 | 77,099 | 150,536 | 998,629 |
| 04.31 Construction Management | 1.00 | EA | 181,500 | 36,300 | 60,440 | 278,240 |
| TOTAL Item No. 4, Wabbaseka Bayou Chan | 1.00 | EA | 3,106,428 | 651,610 | 494,051 | 4,252,089 |
| 05 Item No. 5, Indian Bayou Ditch | | | | | | |
| 05.01 Lands and Damages | 1.00 | EA | 239,223 | 60,100 | 62,576 | 361,899 |
| 05.09 Channels and Canals | 1.00 | EA | 524,178 | 131,044 | 76,006 | 731,228 |
| 05.15 Flood Control and Diversion Strs | 1.00 | EA | 125,397 | 31,349 | 18,183 | 174,929 |

** PROJECT OWNER SUMMARY - Feature **

| | | QUANTY UOM | CONTRACT COST | CONTINGN | ESCALATN | TOTAL COST |
|---|---|---|---|---|---|---|
| 05.30 | Planning, Engineering and Design | 1.00 EA | 778,555 | 77,856 | 237,654 | 1,094,064 |
| 05.31 | Construction Management | 1.00 EA | 75,800 | 15,160 | 30,290 | 121,250 |
| TOTAL | Item No. 5, Indian Bayou Ditch | 1.00 EA | 1,743,153 | 315,509 | 424,708 | 2,483,370 |
| 06 | Item No. 6, Indian Bayou Channel | | | | | |
| 06.01 | Lands and Damages | 1.00 EA | 617,738 | 154,440 | 185,142 | 957,320 |
| 06.09 | Channels and Canals | 1.00 EA | 815,866 | 203,966 | 122,890 | 1,142,722 |
| 06.15 | Flood Control and Diversion Strs | 1.00 EA | 158,963 | 39,741 | 23,944 | 222,648 |
| 06.30 | Planning, Engineering and Design | 1.00 EA | 803,205 | 80,321 | 245,178 | 1,128,704 |
| 06.31 | Construction Management | 1.00 EA | 118,000 | 23,600 | 47,153 | 188,753 |
| TOTAL | Item No. 6, Indian Bayou Channel | 1.00 EA | 2,513,772 | 502,068 | 624,306 | 3,640,146 |
| 07 | Item No. 7, Salt Bayou Channel | | | | | |
| 07.01 | Lands and Damages | 1.00 EA | 129,430 | 32,360 | 44,897 | 206,687 |
| 07.09 | Channels and Canals | 1.00 EA | 565,743 | 141,436 | 84,862 | 792,041 |
| 07.30 | Planning, Engineering and Design | 1.00 EA | 516,437 | 51,644 | 157,642 | 725,723 |
| 07.31 | Construction Management | 1.00 EA | 116,000 | 23,200 | 46,354 | 185,554 |
| TOTAL | Item No. 7, Salt Bayou Channel | 1.00 EA | 1,327,610 | 248,640 | 333,754 | 1,910,004 |
| 08 | Item No. 8, Crooked Creek | | | | | |
| 08.01 | Lands and Damages | 1.00 EA | 412,652 | 102,910 | 117,759 | 633,321 |
| 08.09 | Channels and Canals | 1.00 EA | 1,895,376 | 473,844 | 283,122 | 2,652,341 |
| 08.15 | Flood Control and Diversion Strs | 1.00 EA | 27,086 | 6,772 | 4,046 | 37,904 |
| 08.30 | Planning, Engineering and Design | 1.00 EA | 1,091,920 | 109,192 | 333,309 | 1,534,421 |
| 08.31 | Construction Management | 1.00 EA | 221,500 | 44,300 | 88,511 | 354,311 |
| TOTAL | Item No. 8, Crooked Creek | 1.00 EA | 3,648,534 | 737,017 | 826,747 | 5,212,298 |
| 09 | Item No. 9, Big Bayou Meto Div. | | | | | |
| 09.01 | Lands and Damages | 1.00 EA | 158,843 | 40,180 | 28,429 | 227,452 |
| 09.02 | Relocations | 1.00 EA | 634,000 | 138,000 | 173,700 | 945,700 |
| 09.09 | Channels and Canals | 1.00 EA | 1,935,791 | 483,948 | 258,912 | 2,678,650 |
| 09.11 | Levees and Floodwalls | 1.00 EA | 432,314 | 108,079 | 57,822 | 598,215 |
| 09.15 | Flood Control and Diversion Strs | 1.00 EA | 115,884 | 28,971 | 15,499 | 160,354 |
| 09.30 | Planning, Engineering and Design | 1.00 EA | 1,240,588 | 124,059 | 276,341 | 1,640,988 |
| 09.31 | Construction Management | 1.00 EA | 295,500 | 59,100 | 98,402 | 453,002 |
| TOTAL | Item No. 9, Big Bayou Meto Div. | 1.00 EA | 4,812,919 | 982,336 | 909,105 | 6,704,360 |

** PROJECT OWNER SUMMARY - Feature **

| | | QUANTY | UOM | CONTRACT COST | CONTINGN | ESCALATN | TOTAL COST |
|---|---|---|---|---|---|---|---|
| 10 | Item No. 10, Mitigation | | | | | | |
| 10.01 | Lands and Damages | 1.00 | EA | 2,698,450 | 675,030 | 19,109 | 3,392,589 |
| 10.06 | Fish and Wildlife Facilities | 1.00 | EA | 562,512 | 56,251 | 139,222 | 757,985 |
| 10.30 | Planning, Engineering & Design | 1.00 | EA | 203,200 | 20,320 | 50,292 | 273,812 |
| 10.31 | Construction Management | 1.00 | EA | 101,600 | 10,160 | 25,146 | 136,906 |
| TOTAL | Item No. 10, Mitigation | 1.00 | EA | 3,565,762 | 761,761 | 233,769 | 4,561,292 |
| TOTAL | Bayou Meto Selected Plan | 1.00 | EA | 50,653,349 | 11,023,222 | 6,411,908 | 68,088,479 |

4,232,43

| | | QUANTY | UOM | CONTRACT COST | CONTINGN | ESCALATN | TOTAL COST |
|---|---|---|---|---|---|---|---|
| 01 | Little Bayou Meto 1000 CFS Pump | | | | | | |
| 01.01 | Lands and Damages | | | | | | |
| 01.01.02 | Acquisitions | | | 14,385 | 3,600 | 1,457 | 19,442 |
| 01.01.05 | Appraisals | | | 3,675 | 920 | 372 | 4,967 |
| 01.01.06 | PL 91-646 Assistance | | | 600 | 150 | 61 | 811 |
| 01.01.07 | Temporary Permits/Rights of Enty | | | 450 | 110 | 45 | 605 |
| 01.01.13 | Project Related Administration | 1.00 | EA | 360 | 90 | 36 | 486 |
| 01.01.18 | Real Estate Payments | | | 20,525 | 5,300 | 132 | 25,957 |
| | TOTAL Lands and Damages | 1.00 | EA | 39,995 | 10,170 | 2,103 | 52,268 |
| 01.15 | Pumping Plant | | | | | | |
| 01.15.10 | Little Bayou Meto 1000 CFS Pumps | 1.00 | EA | 13,959,326 | 3,489,832 | 933,530 | 18,382,688 |
| | TOTAL Pumping Plant | 1.00 | EA | 13,959,326 | 3,489,832 | 933,530 | 18,382,688 |
| 01.30 | Planning, Engineering and Design | | | | | | |
| 01.30.04 | Construction Contract P, E, & D | 1.00 | EA | 2,094,808 | 523,702 | 181,986 | 2,800,496 |
| 01.30.05 | Programs and Project Management | 1.00 | EA | 82,577 | 20,644 | 7,174 | 110,395 |
| | TOTAL Planning, Engineering and Design | 1.00 | EA | 2,177,385 | 544,346 | 189,160 | 2,910,892 |
| 01.31 | Construction Management | | | | | | |
| 01.31.02 | Area Office S & A | 1.00 | EA | 1,200,000 | 180,000 | 230,460 | 1,610,460 |
| 01.31.03 | District Office S & A | | | 503,000 | 75,450 | 96,601 | 675,051 |
| | TOTAL Construction Management | 1.00 | EA | 1,703,000 | 255,450 | 327,061 | 2,285,511 |
| | TOTAL Little Bayou Meto 1000 CFS Pump | 1.00 | EA | 17,879,706 | 4,299,798 | 1,451,855 | 23,631,359 |
| 02 | Item No. 2, Little Bayou Meto CC | | | | | | |
| 02.01 | Lands and Damages | | | | | | |
| 02.01.01 | Project Planning | 1.00 | EA | 3,800 | 956 | 350 | 5,106 |
| 02.01.02 | Acquisitions | | | 86,310 | 21,724 | 7,941 | 115,975 |
| 02.01.05 | Appraisals | | | 22,050 | 5,550 | 2,029 | 29,629 |
| 02.01.06 | PL 91-646 Assistance | | | 3,600 | 906 | 331 | 4,837 |
| 02.01.07 | Temporary Permits/Rights of Enty | | | 2,700 | 680 | 248 | 3,628 |
| 02.01.13 | Project Related Administration | 1.00 | EA | 2,160 | 544 | 199 | 2,902 |

** PROJECT OWNER SUMMARY Sub-Feat **

| | QUANTY | UOM | CONTRACT COST | CONTINGN | ESCALATN | TOTAL COST |
|---|---|---|---|---|---|---|
| 02.01.18 Real Estate Payments | | | 189,950 | 47,810 | 731 | 238,492 |
| TOTAL Lands and Damages | 1.00 | EA | 310,570 | 78,170 | 11,828 | 400,568 |
| 02.02 Relocations | | | | | | |
| 02.02.01 Roads, Construction Activities | | | 453,000 | 98,478 | 44,670 | 596,148 |
| 02.02.03 Cemetery, Utilities, & Structure | | | 62,200 | 13,522 | 6,133 | 81,855 |
| TOTAL Relocations | 1.00 | EA | 515,200 | 112,000 | 50,803 | 678,003 |
| 02.09 Channels and Canals | | | | | | |
| 02.09.01 Channels | 1.00 | EA | 3,896,525 | 974,131 | 255,709 | 5,126,365 |
| TOTAL Channels and Canals | 1.00 | EA | 3,896,525 | 974,131 | 255,709 | 5,126,365 |
| 02.11 Levees and Floodwalls | | | | | | |
| 02.11.01 Levees | | | 293,610 | 73,403 | 19,268 | 386,281 |
| TOTAL Levees and Floodwalls | 1.00 | EA | 293,610 | 73,403 | 19,268 | 386,281 |
| 02.15 Floodway Control & Diversion Str | | | | | | |
| 02.15.15 Cannon Break Control Stru (1K) | 1.00 | EA | 687,667 | 171,917 | 45,128 | 904,711 |
| TOTAL Floodway Control & Diversion Str | 1.00 | EA | 687,667 | 171,917 | 45,128 | 904,711 |
| 02.30 Planning, Engineering and Design | | | | | | |
| 02.30.04 Construction Contract P, E, & D | 1.00 | EA | 1,431,732 | 143,173 | 109,456 | 1,684,361 |
| 02.30.05 Programs and Project Management | 1.00 | EA | 83,577 | 8,358 | 6,389 | 98,324 |
| TOTAL Planning, Engineering and Design | 1.00 | EA | 1,515,309 | 151,531 | 115,845 | 1,782,685 |
| 02.31 Construction Management | | | | | | |
| 02.31.02 Area Office S & A | 1.00 | EA | 400,000 | 80,000 | 80,160 | 560,160 |
| 02.31.03 Distrace Office S & A | 1.00 | EA | 182,000 | 36,400 | 36,473 | 254,873 |
| TOTAL Construction Management | 1.00 | EA | 582,000 | 116,400 | 116,633 | 815,033 |
| TOTAL Item No. 2, Little Bayou Meto CC | 1.00 | EA | 7,800,881 | 1,677,551 | 615,216 | 10,093,648 |

** PROJECT OWNER SUMMARY - Sub-Feat **

| | QUANTY UOM | CONTRACT COST | CONTINGN | ESCALATN | TOTAL COST |
|---|---|---|---|---|---|
| 03 Item No. 3, Boggy Slough | | | | | |
| 03.01 Lands and Damages | | | | | |
| 03.01.02 Acquisitions | | 14,385 | 3,643 | 3,182 | 21,210 |
| 03.01.05 Appraisals | | 3,675 | 931 | 813 | 5,419 |
| 03.01.06 PL 91-646 Assistance | | 600 | 152 | 133 | 885 |
| 03.01.07 Temporary Permits/Rights of Enty | | 450 | 114 | 100 | 664 |
| 03.01.13 Project Related Administration | 1.00 EA | 360 | 91 | 80 | 531 |
| 03.01.18 Real Estate Payments | | 48,325 | 12,239 | 293 | 60,857 |
| TOTAL Lands and Damages | 1.00 EA | 67,795 | 17,170 | 4,600 | 89,565 |
| 03.09 Channels and Canals | | | | | |
| 03.09.01 Channels | 1.00 EA | 1,691,897 | 422,974 | 152,271 | 2,267,142 |
| TOTAL Channels and Canals | 1.00 EA | 1,691,897 | 422,974 | 152,271 | 2,267,142 |
| 03.11 Levees and Floodwalls | | | | | |
| 03.11.01 Levees | | 275,117 | 68,779 | 24,760 | 368,656 |
| TOTAL Levees and Floodwalls | 1.00 EA | 275,117 | 68,779 | 24,760 | 368,656 |
| 03.15 Floodway Control & Diversion Str | | | | | |
| 03.15.01 Castor Bayou Low Drop Structure | 1.00 EA | 47,684 | 11,921 | 4,292 | 63,897 |
| 03.15.02 L.B.M. Boggy Slough @ Mi 17.65 | 1.00 EA | 297,891 | 74,473 | 26,810 | 399,174 |
| 03.15.03 Boggy Slough Div. Weir @mi 5.0 | 1.00 EA | 96,602 | 24,150 | 8,694 | 129,446 |
| 03.15.04 Boggy Slough Div. Weir @Mi 0.1 | 1.00 EA | 133,695 | 33,424 | 12,033 | 179,151 |
| TOTAL Floodway Control & Diversion Str | 1.00 EA | 575,872 | 143,968 | 51,828 | 771,668 |
| 03.30 Planning, Engineering and Design | | | | | |
| 03.30.04 Construction Contract P, E, & D | 1.00 EA | 1,264,826 | 126,483 | 173,218 | 1,564,527 |
| 03.30.05 Programs and Project Management | 1.00 EA | 82,577 | 8,258 | 11,309 | 102,144 |
| TOTAL Planning, Engineering and Design | 1.00 EA | 1,347,403 | 134,740 | 184,527 | 1,666,670 |
| 03.31 Construction Management | | | | | |
| 03.31.02 Area Office S & A | 1.00 EA | 200,000 | 40,000 | 54,240 | 294,240 |
| 03.31.03 Districe Office S & A | 1.00 EA | 96,500 | 19,300 | 26,171 | 141,971 |

| | QUANTY | UOM | CONTRACT COST | CONTINGN | ESCALATN | TOTAL COST |
|---|---|---|---|---|---|---|
| TOTAL Construction Management | 1.00 | EA | 296,500 | 59,300 | 80,411 | 436,211 |
| TOTAL Item No. 3, Boggy Slough | 1.00 | EA | 4,254,584 | 846,932 | 498,397 | 5,599,913 |
| 04 Item No. 4, Wabbaseka Bayou Chan | | | | | | |
| 04.01 Lands and Damages | | | | | | |
| 04.01.02 Acquisitions | | | 201,390 | 50,248 | 56,619 | 308,257 |
| 04.01.05 Appraisals | | | 51,450 | 12,837 | 14,465 | 78,752 |
| 04.01.06 PL 91-646 Assistance | | | 8,400 | 2,096 | 2,362 | 12,857 |
| 04.01.07 Temporary Permits/Rights of Enty | | | 6,300 | 1,572 | 1,771 | 9,643 |
| 04.01.13 Project Related Administration | 1.00 | EA | 5,040 | 1,258 | 1,417 | 7,714 |
| 04.01.18 Real Estate Payments | | | 279,550 | 69,750 | 5,215 | 354,515 |
| TOTAL Lands and Damages | 1.00 | EA | 552,130 | 137,760 | 81,848 | 771,738 |
| 04.09 Channels and Canals | | | | | | |
| 04.09.01 Channels | 1.00 | EA | 1,601,805 | 400,451 | 201,227 | 2,203,482 |
| TOTAL Channels and Canals | 1.00 | EA | 1,601,805 | 400,451 | 201,227 | 2,203,482 |
| 04.30 Planning, Engineering and Design | | | | | | |
| 04.30.04 Construction Contract P, E, & D | 1.00 | EA | 688,416 | 68,842 | 134,413 | 891,671 |
| 04.30.05 Programs and Project Management | 1.00 | EA | 82,577 | 8,258 | 16,123 | 106,958 |
| TOTAL Planning, Engineering and Design | 1.00 | EA | 770,993 | 77,099 | 150,536 | 998,629 |
| 04.31 Construction Management | | | | | | |
| 04.31.02 Area Office S & A | 1.00 | EA | 120,000 | 24,000 | 39,960 | 183,960 |
| 04.31.03 Districe Office S & A | 1.00 | EA | 61,500 | 12,300 | 20,480 | 94,280 |
| TOTAL Construction Management | 1.00 | EA | 181,500 | 36,300 | 60,440 | 278,240 |
| TOTAL Item No. 4, Wabbaseka Bayou Chan | 1.00 | EA | 3,106,428 | 651,610 | 494,051 | 4,252,089 |
| 05 Item No. 5, Indian Bayou Ditch | | | | | | |
| 05.01 Lands and Damages | | | | | | |
| 05.01.02 Acquisitions | | | 124,670 | 31,321 | 43,287 | 199,278 |
| 05.01.05 Appraisals | | | 31,850 | 8,002 | 11,059 | 50,911 |
| 05.01.06 PL 91-646 Assistance | | | 5,200 | 1,306 | 1,806 | 8,312 |

** PROJECT OWNER SUMMARY - Sub Feat **

| | | QUANTY | UOM | CONTRACT COST | CONTINGN | ESCALATN | TOTAL COST |
|---|---|---|---|---|---|---|---|
| 05.01.07 | Temporary Permits/Rights of Enty | | | 3,900 | 980 | 1,354 | 6,234 |
| 05.01.13 | Project Related Administration | 1.00 | EA | 3,120 | 784 | 1,083 | 4,987 |
| 05.01.18 | Real Estate Payments | | | 70,483 | 17,707 | 3,987 | 92,178 |
| TOTAL | Lands and Damages | 1.00 | EA | 239,223 | 60,100 | 62,576 | 361,899 |
| 05.09 | Channels and Canals | | | | | | |
| 05.09.03 | Channels | 1.00 | EA | 524,178 | 131,044 | 76,006 | 731,228 |
| TOTAL | Channels and Canals | 1.00 | EA | 524,178 | 131,044 | 76,006 | 731,228 |
| 05.15 | Flood Control and Diversion Strs | | | | | | |
| 05.15.01 | Indian Bayou Ditch @ Mi 58.3 | 1.00 | EA | 125,397 | 31,349 | 18,183 | 174,929 |
| TOTAL | Flood Control and Diversion Strs | 1.00 | EA | 125,397 | 31,349 | 18,183 | 174,929 |
| 05.30 | Planning, Engineering and Design | | | | | | |
| 05.30.04 | Construction Contract P, E, & D | 1.00 | EA | 695,978 | 69,598 | 212,447 | 978,023 |
| 05.30.05 | Programs and Project Management | 1.00 | EA | 82,577 | 8,258 | 25,207 | 116,041 |
| TOTAL | Planning, Engineering and Design | 1.00 | EA | 778,555 | 77,856 | 237,654 | 1,094,064 |
| 05.31 | Construction Management | | | | | | |
| 05.31.02 | Area Office S & A | 1.00 | EA | 50,000 | 10,000 | 19,980 | 79,980 |
| 05.31.03 | Districe Office S & A | 1.00 | EA | 25,800 | 5,160 | 10,310 | 41,270 |
| TOTAL | Construction Management | 1.00 | EA | 75,800 | 15,160 | 30,290 | 121,250 |
| TOTAL | Item No. 5, Indian Bayou Ditch | 1.00 | EA | 1,743,153 | 315,509 | 424,708 | 2,483,370 |
| 06 | Item No. 6, Indian Bayou Channel | | | | | | |
| 06.01 | Lands and Damages | | | | | | |
| 06.01.02 | Acquisitions | | | 369,215 | 92,307 | 128,072 | 589,594 |
| 06.01.05 | Appraisals | | | 94,325 | 23,582 | 32,719 | 150,626 |
| 06.01.06 | PL 91-646 Assistance | | | 15,400 | 3,850 | 5,342 | 24,592 |
| 06.01.07 | Temporary Permits/Rights of Enty | | | 11,550 | 2,888 | 4,006 | 18,444 |
| 06.01.13 | Project Related Administration | 2.00 | EA | 9,240 | 2,310 | 3,205 | 14,755 |
| 06.01.18 | Real Estate Payments | | | 118,008 | 29,503 | 11,797 | 159,308 |
| TOTAL | Lands and Damages | 1.00 | EA | 617,738 | 154,440 | 185,142 | 957,320 |

** PROJECT OWNER SUMMARY - Sub-Feat **

| | QUANTY | UOM | CONTRACT COST | CONTINGN | ESCALATN | TOTAL COST |
|---|---|---|---|---|---|---|
| 06.09 Channels and Canals | | | | | | |
| 06.09.01 Channels | 1.00 | EA | 815,866 | 203,966 | 122,890 | 1,142,722 |
| TOTAL Channels and Canals | 1.00 | EA | 815,866 | 203,966 | 122,890 | 1,142,722 |
| 06.15 Flood Control and Diversion Strs | | | | | | |
| 06.15.03 Indian Bayou @ Mi 16.4 | 1.00 | EA | 158,963 | 39,741 | 23,944 | 222,648 |
| TOTAL Flood Control and Diversion Strs | 1.00 | EA | 158,963 | 39,741 | 23,944 | 222,648 |
| 06.30 Planning, Engineering and Design | | | | | | |
| 06.30.04 Construction Contract P, E, & D | 1.00 | EA | 720,628 | 72,063 | 219,972 | 1,012,662 |
| 06.30.05 Programs and Project Management | 1.00 | EA | 82,577 | 8,258 | 25,207 | 116,041 |
| TOTAL Planning, Engineering and Design | 1.00 | EA | 803,205 | 80,321 | 245,178 | 1,128,704 |
| 06.31 Construction Management | | | | | | |
| 06.31.02 Area Office S & A | 1.00 | EA | 80,000 | 16,000 | 31,968 | 127,968 |
| 06.31.03 Distrace Office S & A | | | 38,000 | 7,600 | 15,185 | 60,785 |
| TOTAL Construction Management | 1.00 | EA | 118,000 | 23,600 | 47,153 | 188,753 |
| TOTAL Item No. 6, Indian Bayou Channel | 1.00 | EA | 2,513,772 | 502,068 | 624,306 | 3,640,146 |
| 07 Item No. 7, Salt Bayou Channel | | | | | | |
| 07.01 Lands and Damages | | | | | | |
| 07.01.02 Acquisitions | | | 33,565 | 8,392 | 11,643 | 53,600 |
| 07.01.05 Appraisals | | | 8,575 | 2,144 | 2,974 | 13,693 |
| 07.01.06 PL 91-646 Assistance | | | 1,400 | 350 | 486 | 2,236 |
| 07.01.07 Temporary Permits/Rights of Enty | | | 1,050 | 263 | 364 | 1,677 |
| 07.01.13 Project Related Administration | 1.00 | EA | 840 | 210 | 291 | 1,341 |
| 07.01.18 Real Estate Payments | | | 84,000 | 21,002 | 29,138 | 134,140 |
| TOTAL Lands and Damages | 1.00 | EA | 129,430 | 32,360 | 44,897 | 206,687 |
| 07.09 Channels and Canals | | | | | | |
| 07.09.01 Channels | 1.00 | EA | 565,743 | 141,436 | 84,862 | 792,041 |
| TOTAL Channels and Canals | 1.00 | EA | 565,743 | 141,436 | 84,862 | 792,041 |

| | | QUANTY | UOM | CONTRACT COST | CONTINGN | ESCALATN | TOTAL COST |
|---|---|---|---|---|---|---|---|
| 07.30 | Planning, Engineering and Design | | | | | | |
| 07.30.04 | Construction Contract P, E, & D | 1.00 | EA | 433,860 | 43,386 | 132,436 | 609,682 |
| 07.30.05 | Programs and Project Management | 1.00 | EA | 82,577 | 8,258 | 25,207 | 116,041 |
| TOTAL | Planning, Engineering and Design | 1.00 | EA | 516,437 | 51,644 | 157,642 | 725,723 |
| 07 31 | Construction Management | | | | | | |
| 07.31.02 | Area Office S & A | 1.00 | EA | 80,000 | 16,000 | 31,968 | 127,968 |
| 07.31.03 | Districe Office S & A | 1.00 | EA | 36,000 | 7,200 | 14,386 | 57,586 |
| TOTAL | Construction Management | 1.00 | EA | 116,000 | 23,200 | 46,354 | 185,554 |
| TOTAL | Item No. 7, Salt Bayou Channel | 1.00 | EA | 1,327,610 | 248,640 | 333,754 | 1,910,004 |
| 08 | Item No. 8, Crooked Creek | | | | | | |
| 08 01 | Lands and Damages | | | | | | |
| 08.01.02 | Acquisitions | | | 234,955 | 58,595 | 81,460 | 375,010 |
| 08.01.05 | Appraisals | | | 60,025 | 14,969 | 20,811 | 95,805 |
| 08.01.06 | PL 91-646 Assistance | | | 9,800 | 2,444 | 3,398 | 15,642 |
| 08.01.07 | Temporary Permits/Rights of Enty | | | 7,350 | 1,833 | 2,548 | 11,731 |
| 08.01.13 | Project Related Administration | 1.00 | EA | 5,880 | 1,466 | 2,039 | 9,385 |
| 08.01.18 | Real Estate Payments | | | 94,642 | 23,602 | 7,503 | 125,748 |
| TOTAL | Lands and Damages | 1 00 | EA | 412,652 | 102,910 | 117,759 | 633,321 |
| 08.09 | Channels and Canals | | | | | | |
| 08 09 01 | Channels | 1.00 | EA | 1,895,376 | 473,844 | 283,122 | 2,652,341 |
| TOTAL | Channels and Canals | 1.00 | EA | 1,895,376 | 473,844 | 283,122 | 2,652,341 |
| 08.15 | Flood Control and Diversion Strs | | | | | | |
| 08.15.01 | Wier @ Mi. 4.3 | 1.00 | EA | 13,543 | 3,386 | 2,023 | 18,952 |
| 08.15.02 | Wier @ Mi. 13.3 | 1.00 | EA | 13,543 | 3,386 | 2,023 | 18,952 |
| TOTAL | Flood Control and Diversion Strs | 1.00 | EA | 27,086 | 6,772 | 4,046 | 37,904 |
| 08 30 | Planning, Engineering and Design | | | | | | |
| 08.30 04 | Construction Contract P, E, & D | 1.00 | EA | 1,009,343 | 100,934 | 308,102 | 1,418,379 |

| | QUANTY | UOM | CONTRACT COST | CONTINGN | ESCALATN | TOTAL COST |
|---|---|---|---|---|---|---|
| 08.30.05 Programs and Project Management | 1.00 | EA | 82,577 | 8,258 | 25,207 | 116,041 |
| TOTAL Planning, Engineering and Design | 1.00 | EA | 1,091,920 | 109,192 | 333,309 | 1,534,421 |
| 08.31 Construction Management | | | | | | |
| 08.31.02 Area Office S & A | 1.00 | EA | 150,000 | 30,000 | 59,940 | 239,940 |
| 08.31.03 District Office S & A | | | 71,500 | 14,300 | 28,571 | 114,371 |
| TOTAL Construction Management | 1.00 | EA | 221,500 | 44,300 | 88,511 | 354,311 |
| TOTAL Item No. 8, Crooked Creek | 1.00 | EA | 3,648,534 | 737,017 | 826,747 | 5,212,298 |
| 09 Item No. 9, Big Bayou Meto Div. | | | | | | |
| 09.01 Lands and Damages | | | | | | |
| 09.01.01 Project Planning | 1.00 | EA | 3,800 | 961 | 1,071 | 5,833 |
| 09.01.02 Acquisitions | | | 67,130 | 16,981 | 18,925 | 103,036 |
| 09.01.05 Appraisals | | | 17,150 | 4,338 | 4,835 | 26,323 |
| 09.01.06 PL 91-646 Assistance | | | 2,800 | 708 | 789 | 4,298 |
| 09.01.07 Temporary Permits/Rights of Entry | | | 2,100 | 531 | 592 | 3,223 |
| 09.01.13 Project Related Administration | 1.00 | EA | 1,680 | 425 | 474 | 2,579 |
| 09.01.18 Real Estate Payments | | | 64,183 | 16,235 | 1,743 | 82,161 |
| TOTAL Lands and Damages | 1.00 | EA | 158,843 | 40,180 | 28,429 | 227,452 |
| 09.02 Relocations | | | | | | |
| 09.02.01 Roads, Construction Activities | | | 519,000 | 112,968 | 142,193 | 774,161 |
| 09.02.03 Cemetery, Utilities, & Structure | | | 115,000 | 25,032 | 31,507 | 171,539 |
| TOTAL Relocations | 1.00 | EA | 634,000 | 138,000 | 173,700 | 945,700 |
| 09.09 Channels and Canals | | | | | | |
| 09.09.01 Channels | 1.00 | EA | 1,935,791 | 483,948 | 258,912 | 2,678,650 |
| TOTAL Channels and Canals | 1.00 | EA | 1,935,791 | 483,948 | 258,912 | 2,678,650 |
| 09.11 Levees and Floodwalls | | | | | | |
| 09.11.01 Levees | | | 432,314 | 108,079 | 57,822 | 598,215 |
| TOTAL Levees and Floodwalls | 1.00 | EA | 432,314 | 108,079 | 57,822 | 598,215 |

| | QUANTY | UOM | CONTRACT COST | CONTINGN | ESCALATN | TOTAL COST |
|---|---|---|---|---|---|---|
| 09.15 Flood Control and Diversion Strs | | | | | | |
| 09.15.01 B.B.M. Diversion Wier Mi 0.0 | 1.00 | EA | 57,942 | 14,485 | 7,750 | 80,177 |
| 09.15.02 B.B.M. Diversion Mi 2.5 Low Wier | 1.00 | EA | 57,942 | 14,485 | 7,750 | 80,177 |
| TOTAL Flood Control and Diversion Strs | 1.00 | EA | 115,884 | 28,971 | 15,499 | 160,354 |
| 09.30 Planning, Engineering and Design | | | | | | |
| 09.30.04 Construction Contract P, E, & D | 1.00 | EA | 1,158,011 | 115,801 | 257,947 | 1,531,759 |
| 09.30.05 Programs and Project Management | 1.00 | EA | 82,577 | 8,258 | 18,394 | 109,229 |
| TOTAL Planning, Engineering and Design | 1.00 | EA | 1,240,588 | 124,059 | 276,341 | 1,640,988 |
| 09.31 Construction Management | | | | | | |
| 09.31.02 Area Office S & A | 1.00 | EA | 200,000 | 40,000 | 66,600 | 306,600 |
| 09.31.03 Districe Office S & A | | | 95,500 | 19,100 | 31,802 | 146,402 |
| TOTAL Construction Management | 1.00 | EA | 295,500 | 59,100 | 98,402 | 453,002 |
| TOTAL Item No 9, Big Bayou Meto Div. | 1.00 | EA | 4,812,919 | 982,336 | 909,105 | 6,704,360 |
| 10 Item No. 10, Mitigation | | | | | | |
| 10.01 Lands and Damages | | | | | | |
| 10.01.02 Acquisitions | 1.00 | EA | 47,950 | 11,990 | 13,487 | 73,427 |
| 10.01.05 Appraisal | 1.00 | EA | 12,250 | 3,060 | 3,445 | 18,755 |
| 10.01.06 PL 91-646 Assistance | 1.00 | EA | 2,000 | 530 | 569 | 3,099 |
| 10.01.07 Temp Permits/Licenses/Rights | 1.00 | EA | 1,500 | 400 | 427 | 2,328 |
| 10.01.13 Project Related Admin | 1.00 | EA | 1,200 | 300 | 338 | 1,838 |
| 10.01.18 Real Estate Payments | | | 2,633,550 | 658,750 | 844 | 3,293,144 |
| TOTAL Lands and Damages | 1.00 | EA | 2,698,450 | 675,030 | 19,109 | 3,392,589 |
| 10.06 Fish and Wildlife Facilities | | | | | | |
| 10.06.03 Wildlife Facilities | 1.00 | EA | 562,512 | 56,251 | 139,222 | 757,985 |
| TOTAL Fish and Wildlife Facilities | 1.00 | EA | 562,512 | 56,251 | 139,222 | 757,985 |
| 10.30 Planning, Engineering & Design | 1.00 | EA | 203,200 | 20,320 | 50,292 | 273,812 |
| 10.31 Construction Management | 1.00 | EA | 101,600 | 10,160 | 25,146 | 136,906 |
| TOTAL Item No. 10, Mitigation | 1.00 | EA | 3,565,762 | 761,761 | 233,769 | 4,561,292 |

** PROJECT OWNER SUMMARY - Sub-Feat **

| | QUANTY | UOM | CONTRACT COST | CONTINGN | ESCALATN | TOTAL COST |
|---|---|---|---|---|---|---|
| TOTAL Bayou Meto Selected Plan | 1.00 | EA | 50,653,349 | 11,023,222 | 6,411,908 | 68,088,479 |

** PROJECT INDIRECT SUMMARY - Contract **

| | | QUANTY UOM | TOTAL DIRECT | OVERHEAD | HOME OFC | PROFIT | BOND | TOTAL COST |
|---|---|---|---|---|---|---|---|---|
| 01 | Little Bayou Meto 1000 CFS Pump | 1.00 EA | 14,227,722 | 1,546,101 | 711,207 | 1,256,465 | 138,211 | 17,879,706 |
| 02 | Item No. 2, Little Bayou Meto CC | 1.00 EA | 6,524,769 | 540,254 | 248,517 | 439,046 | 48,295 | 7,800,881 |
| 03 | Item No. 3, Boggy Slough | 1.00 EA | 3,589,324 | 281,644 | 129,556 | 228,883 | 25,177 | 4,254,584 |
| 04 | Item No 4, Wabbaseka Bayou Chan | 1.00 EA | 2,687,370 | 177,412 | 81,610 | 144,177 | 15,859 | 3,106,428 |
| 05 | Item No 5, Indian Bayou Ditch | 1.00 EA | 1,573,213 | 71,945 | 33,095 | 58,468 | 6,431 | 1,743,153 |
| 06 | Item No. 6, Indian Bayou Channel | 1.00 EA | 2,258,741 | 107,970 | 49,666 | 87,743 | 9,652 | 2,513,772 |
| 07 | Item No. 7, Salt Bayou Channel | 1.00 EA | 1,179,603 | 62,660 | 28,824 | 50,929 | 5,601 | 1,327,610 |
| 08 | Item No. 8, Crooked Creek | 1.00 EA | 3,145,587 | 212,927 | 97,947 | 173,039 | 19,034 | 3,648,534 |
| 09 | Item No. 9, Big Bayou Meto Div. | 1.00 EA | 4,163,068 | 275,121 | 126,555 | 223,581 | 24,594 | 4,812,919 |
| 10 | Item No. 10, Mitigation | 1.00 EA | 3,418,600 | 62,303 | 28,659 | 50,631 | 5,569 | 3,565,762 |
| TOTAL | Bayou Meto Selected Plan | 1.00 EA | 42,767,998 | 3,338,336 | 1,535,635 | 2,712,955 | 298,425 | 50,653,349 |
| | CONTINGENCIES | | | | | | | 11,023,222 |
| | SUBTOTAL | | | | | | | 61,676,571 |
| | ESCALATION | | | | | | | 6,411,908 |
| | TOTAL INCL OWNER COSTS | | | | | | | 68,088,479 |

** PROJECT INDIRECT SUMMARY Feature **

| | QUANTY | UOM | TOTAL DIRECT | OVERHEAD | HOME OFC | PROFIT | BOND | TOTAL COST |
|---|---|---|---|---|---|---|---|---|
| 01 Little Bayou Meto 1000 CFS Pump | | | | | | | | |
| 01.01 Lands and Damages | 1.00 | EA | 39,995 | 0 | 0 | 0 | 0 | 39,995 |
| 01.15 Pumping Plant | 1.00 | EA | 10,307,342 | 1,546,101 | 711,207 | 1,256,465 | 138,211 | 13,959,326 |
| 01.30 Planning, Engineering and Design | 1.00 | EA | 2,177,385 | 0 | 0 | 0 | 0 | 2,177,385 |
| 01.31 Construction Management | 1.00 | EA | 1,703,000 | 0 | 0 | 0 | 0 | 1,703,000 |
| TOTAL Little Bayou Meto 1000 CFS Pump | 1.00 | EA | 14,227,722 | 1,546,101 | 711,207 | 1,256,465 | 138,211 | 17,879,706 |
| 02 Item No. 2, Little Bayou Meto CC | | | | | | | | |
| 02.01 Lands and Damages | 1.00 | EA | 310,570 | 0 | 0 | 0 | 0 | 310,570 |
| 02.02 Relocations | 1.00 | EA | 515,200 | 0 | 0 | 0 | 0 | 515,200 |
| 02.09 Channels and Canals | 1.00 | EA | 2,877,131 | 431,570 | 198,522 | 350,722 | 38,579 | 3,896,525 |
| 02.11 Levees and Floodwalls | 1.00 | EA | 216,797 | 32,520 | 14,959 | 26,428 | 2,907 | 293,610 |
| 02.15 Floodway Control & Diversion Str | 1.00 | EA | 507,762 | 76,164 | 35,036 | 61,896 | 6,809 | 687,667 |
| 02.30 Planning, Engineering and Design | 1.00 | EA | 1,515,309 | 0 | 0 | 0 | 0 | 1,515,309 |
| 02.31 Construction Management | 1.00 | EA | 582,000 | 0 | 0 | 0 | 0 | 582,000 |
| TOTAL Item No. 2, Little Bayou Meto CC | 1.00 | EA | 6,524,769 | 540,254 | 248,517 | 439,046 | 48,295 | 7,800,881 |
| 03 Item No. 3, Boggy Slough | | | | | | | | |
| 03.01 Lands and Damages | 1.00 | EA | 67,795 | 0 | 0 | 0 | 0 | 67,795 |
| 03.09 Channels and Canals | 1.00 | EA | 1,249,270 | 187,390 | 86,200 | 152,286 | 16,751 | 1,691,897 |
| 03.11 Levees and Floodwalls | 1.00 | EA | 203,142 | 30,471 | 14,017 | 24,763 | 2,724 | 275,117 |
| 03.15 Floodway Control & Diversion Str | 1.00 | EA | 425,215 | 63,782 | 29,340 | 51,834 | 5,702 | 575,872 |
| 03.30 Planning, Engineering and Design | 1.00 | EA | 1,347,403 | 0 | 0 | 0 | 0 | 1,347,403 |
| 03.31 Construction Management | 1.00 | EA | 296,500 | 0 | 0 | 0 | 0 | 296,500 |
| TOTAL Item No. 3, Boggy Slough | 1.00 | EA | 3,589,324 | 281,644 | 129,556 | 228,883 | 25,177 | 4,254,584 |
| 04 Item No. 4, Wabbaseka Bayou Chan | | | | | | | | |
| 04.01 Lands and Damages | 1.00 | EA | 552,130 | 0 | 0 | 0 | 0 | 552,130 |
| 04.09 Channels and Canals | 1.00 | EA | 1,182,747 | 177,412 | 81,610 | 144,177 | 15,859 | 1,601,805 |
| 04.30 Planning, Engineering and Design | 1.00 | EA | 770,993 | 0 | 0 | 0 | 0 | 770,993 |
| 04.31 Construction Management | 1.00 | EA | 181,500 | 0 | 0 | 0 | 0 | 181,500 |
| TOTAL Item No. 4, Wabbaseka Bayou Chan | 1.00 | EA | 2,687,370 | 177,412 | 81,610 | 144,177 | 15,859 | 3,106,428 |
| 05 Item No. 5, Indian Bayou Ditch | | | | | | | | |
| 05.01 Lands and Damages | 1.00 | EA | 239,223 | 0 | 0 | 0 | 0 | 239,223 |
| 05.09 Channels and Canals | 1.00 | EA | 387,044 | 58,057 | 26,706 | 47,181 | 5,190 | 524,178 |
| 05.15 Flood Control and Diversion Strs | 1.00 | EA | 92,591 | 13,889 | 6,389 | 11,287 | 1,242 | 125,397 |

** PROJECT INDIRECT SUMMARY Feature **

| | QUANTY | UOM | TOTAL DIRECT | OVERHEAD | HOME OFC | PROFIT | BOND | TOTAL COST |
|---|---|---|---|---|---|---|---|---|
| 05.30 Planning, Engineering and Design | 1.00 | EA | 778,555 | 0 | 0 | 0 | 0 | 778,555 |
| 05.31 Construction Management | 1.00 | EA | 75,800 | 0 | 0 | 0 | 0 | 75,800 |
| TOTAL Item No. 5, Indian Bayou Ditch | 1.00 | EA | 1,573,213 | 71,945 | 33,095 | 58,468 | 6,431 | 1,743,153 |
| 06 Item No. 6, Indian Bayou Channel | | | | | | | | |
| 06.01 Lands and Damages | 1.00 | EA | 617,738 | 0 | 0 | 0 | 0 | 617,738 |
| 06.09 Channels and Canals | 1.00 | EA | 602,422 | 90,363 | 41,567 | 73,435 | 8,078 | 815,866 |
| 06.15 Flood Control and Diversion Strs | 1.00 | EA | 117,376 | 17,606 | 8,099 | 14,308 | 1,574 | 158,963 |
| 06.30 Planning, Engineering and Design | 1.00 | EA | 803,205 | 0 | 0 | 0 | 0 | 803,205 |
| 06.31 Construction Management | 1.00 | EA | 118,000 | 0 | 0 | 0 | 0 | 118,000 |
| TOTAL Item No. 6, Indian Bayou Channel | 1.00 | EA | 2,258,741 | 107,970 | 49,666 | 87,743 | 9,652 | 2,513,772 |
| 07 Item No. 7, Salt Bayou Channel | | | | | | | | |
| 07.01 Lands and Damages | 1.00 | EA | 129,430 | 0 | 0 | 0 | 0 | 129,430 |
| 07.09 Channels and Canals | 1.00 | EA | 417,736 | 62,660 | 28,824 | 50,922 | 5,601 | 565,743 |
| 07.30 Planning, Engineering and Design | 1.00 | EA | 516,437 | 0 | 0 | 0 | 0 | 516,437 |
| 07.31 Construction Management | 1.00 | EA | 116,000 | 0 | 0 | 0 | 0 | 116,000 |
| TOTAL Item No. 7, Salt Bayou Channel | 1.00 | EA | 1,179,603 | 62,660 | 28,824 | 50,922 | 5,601 | 1,327,610 |
| 08 Item No. 8, Crooked Creek | | | | | | | | |
| 08.01 Lands and Damages | 1.00 | EA | 412,652 | 0 | 0 | 0 | 0 | 412,652 |
| 08.09 Channels and Canals | 1.00 | EA | 1,399,515 | 209,927 | 96,567 | 170,601 | 18,766 | 1,895,376 |
| 08.15 Flood Control and Diversion Strs | 1.00 | EA | 20,000 | 3,000 | 1,380 | 2,438 | 268 | 27,086 |
| 08.30 Planning, Engineering and Design | 1.00 | EA | 1,091,920 | 0 | 0 | 0 | 0 | 1,091,920 |
| 08.31 Construction Management | 1.00 | EA | 221,500 | 0 | 0 | 0 | 0 | 221,500 |
| TOTAL Item No. 8, Crooked Creek | 1.00 | EA | 3,145,587 | 212,927 | 97,947 | 173,039 | 19,034 | 3,648,534 |
| 09 Item No. 9, Big Bayou Meto Div. | | | | | | | | |
| 09.01 Lands and Damages | 1.00 | EA | 158,843 | 0 | 0 | 0 | 0 | 158,843 |
| 09.02 Relocations | 1.00 | EA | 634,000 | 0 | 0 | 0 | 0 | 634,000 |
| 09.09 Channels and Canals | 1.00 | EA | 1,429,357 | 214,403 | 98,626 | 174,239 | 19,166 | 1,935,791 |
| 09.11 Levees and Floodwalls | 1.00 | EA | 319,214 | 47,882 | 22,026 | 38,912 | 4,280 | 432,314 |
| 09.15 Flood Control and Diversion Strs | 1.00 | EA | 85,567 | 12,835 | 5,904 | 10,431 | 1,147 | 115,884 |
| 09.30 Planning, Engineering and Design | 1.00 | EA | 1,240,588 | 0 | 0 | 0 | 0 | 1,240,588 |
| 09.31 Construction Management | 1.00 | EA | 295,500 | 0 | 0 | 0 | 0 | 295,500 |
| TOTAL Item No. 9, Big Bayou Meto Div. | 1.00 | EA | 4,163,068 | 275,121 | 126,555 | 223,581 | 24,594 | 4,812,919 |

** PROJECT INDIRECT SUMMARY Feature **

| | QUANTY | UOM | TOTAL DIRECT | OVERHEAD | HOME OFC | PROFIT | BOND | TOTAL COST |
|---|---|---|---|---|---|---|---|---|
| 10 Item No. 10, Mitigation | | | | | | | | |
| 10.01 Lands and Damages | 1.00 | EA | 2,698,450 | 0 | 0 | 0 | 0 | 2,698,450 |
| 10.06 Fish and Wildlife Facilities | 1.00 | EA | 415,350 | 62,303 | 28,659 | 50,631 | 5,569 | 562,512 |
| 10.30 Planning, Engineering & Design | 1.00 | EA | 203,200 | 0 | 0 | 0 | 0 | 203,200 |
| 10.31 Construction Management | 1.00 | EA | 101,600 | 0 | 0 | 0 | 0 | 101,600 |
| TOTAL Item No. 10, Mitigation | 1.00 | EA | 3,418,600 | 62,303 | 28,659 | 50,631 | 5,569 | 3,565,762 |
| TOTAL Bayou Meto Selected Plan | 1.00 | EA | 42,767,998 | 3,338,336 | 1,535,635 | 2,712,955 | 298,425 | 50,653,349 |
| CONTINGENCIES | | | | | | | | 11,023,222 |
| SUBTOTAL | | | | | | | | 61,676,571 |
| ESCALATION | | | | | | | | 6,411,908 |
| TOTAL INCL OWNER COSTS | | | | | | | | 68,088,479 |

** PROJECT INDIRECT SUMMARY - Sub-Feat **

| | QUANTY | UOM | TOTAL DIRECT | OVERHEAD | HOME OFC | PROFIT | BOND | TOTAL COST |
|---|---|---|---|---|---|---|---|---|
| 01 Little Bayou Meto 1000 CFS Pump | | | | | | | | |
| 01.01 Lands and Damages | | | | | | | | |
| 01.01.02 Acquisitions | | | 14,385 | 0 | 0 | 0 | 0 | 14,385 |
| 01.01.05 Appraisals | | | 3,675 | 0 | 0 | 0 | 0 | 3,675 |
| 01.01.06 PL 91-646 Assistance | | | 600 | 0 | 0 | 0 | 0 | 600 |
| 01.01.07 Temporary Permits/Rights of Enty | | | 450 | 0 | 0 | 0 | 0 | 450 |
| 01.01.13 Project Related Administration | 1.00 | EA | 360 | 0 | 0 | 0 | 0 | 360 |
| 01.01.18 Real Estate Payments | | | 20,525 | 0 | 0 | 0 | 0 | 20,525 |
| TOTAL Lands and Damages | 1.00 | EA | 39,995 | 0 | 0 | 0 | 0 | 39,995 |
| 01.15 Pumping Plant | | | | | | | | |
| 01.15.10 Little Bayou Meto 1000 CFS Pumps | 1.00 | EA | 10,307,342 | 1,546,101 | 711,207 | 1,256,465 | 138,211 | 13,959,326 |
| TOTAL Pumping Plant | 1.00 | EA | 10,307,342 | 1,546,101 | 711,207 | 1,256,465 | 138,211 | 13,959,326 |
| 01.30 Planning, Engineering and Design | | | | | | | | |
| 01.30.04 Construction Contract P, E, & D | 1.00 | EA | 2,094,808 | 0 | 0 | 0 | 0 | 2,094,808 |
| 01.30.05 Programs and Project Management | 1.00 | EA | 82,577 | 0 | 0 | 0 | 0 | 82,577 |
| TOTAL Planning, Engineering and Design | 1.00 | EA | 2,177,385 | 0 | 0 | 0 | 0 | 2,177,385 |
| 01.31 Construction Management | | | | | | | | |
| 01.31.02 Area Office S & A | 1.00 | EA | 1,200,000 | 0 | 0 | 0 | 0 | 1,200,000 |
| 01.31.03 District Office S & A | | | 503,000 | 0 | 0 | 0 | 0 | 503,000 |
| TOTAL Construction Management | 1.00 | EA | 1,703,000 | 0 | 0 | 0 | 0 | 1,703,000 |
| TOTAL Little Bayou Meto 1000 CFS Pump | 1.00 | EA | 14,227,722 | 1,546,101 | 711,207 | 1,256,465 | 138,211 | 17,879,706 |
| 02 Item No 2, Little Bayou Meto CC | | | | | | | | |
| 02.01 Lands and Damages | | | | | | | | |
| 02.01.01 Project Planning | 1.00 | EA | 3,800 | 0 | 0 | 0 | 0 | 3,800 |
| 02.01.02 Acquisitions | | | 86,310 | 0 | 0 | 0 | 0 | 86,310 |
| 02.01.05 Appraisals | | | 22,050 | 0 | 0 | 0 | 0 | 22,050 |
| 02.01.06 PL 91-646 Assistance | | | 3,600 | 0 | 0 | 0 | 0 | 3,600 |
| 02.01.07 Temporary Permits/Rights of Enty | | | 2,700 | 0 | 0 | 0 | 0 | 2,700 |
| 02.01.13 Project Related Administration | 1.00 | EA | 2,160 | 0 | 0 | 0 | 0 | 2,160 |

** PROJECT INDIRECT SUMMARY - Sub-Feat **

| | QUANTY | UOM | TOTAL DIRECT | OVERHEAD | HOME OFC | PROFIT | BOND | TOTAL COST |
|---|---|---|---|---|---|---|---|---|
| 02.01.18 Real Estate Payments | | | 189,950 | 0 | 0 | 0 | 0 | 189,950 |
| TOTAL Lands and Damages | 1.00 | EA | 310,570 | 0 | 0 | 0 | 0 | 310,570 |
| 02.02 Relocations | | | | | | | | |
| 02.02.01 Roads, Construction Activities | | | 453,000 | 0 | 0 | 0 | 0 | 453,000 |
| 02.02.03 Cemetery, Utilities, & Structure | | | 62,200 | 0 | 0 | 0 | 0 | 62,200 |
| TOTAL Relocations | 1.00 | EA | 515,200 | 0 | 0 | 0 | 0 | 515,200 |
| 02.09 Channels and Canals | | | | | | | | |
| 02.09.01 Channels | 1.00 | EA | 2,877,131 | 431,570 | 198,522 | 350,722 | 38,579 | 3,896,525 |
| TOTAL Channels and Canals | 1.00 | EA | 2,877,131 | 431,570 | 198,522 | 350,722 | 38,579 | 3,896,525 |
| 02.11 Levees and Floodwalls | | | | | | | | |
| 02.11.01 Levees | | | 216,797 | 32,520 | 14,959 | 26,428 | 2,907 | 293,610 |
| TOTAL Levees and Floodwalls | 1.00 | EA | 216,797 | 32,520 | 14,959 | 26,428 | 2,907 | 293,610 |
| 02.15 Floodway Control & Diversion Str | | | | | | | | |
| 02.15.15 Cannon Break Control Stru (1K) | 1.00 | EA | 507,762 | 76,164 | 35,036 | 61,896 | 6,809 | 687,667 |
| TOTAL Floodway Control & Diversion Str | 1.00 | EA | 507,762 | 76,164 | 35,036 | 61,896 | 6,809 | 687,667 |
| 02.30 Planning, Engineering and Design | | | | | | | | |
| 02.30.04 Construction Contract P, E, & D | 1.00 | EA | 1,431,732 | 0 | 0 | 0 | 0 | 1,431,732 |
| 02.30.05 Programs and Project Management | 1.00 | EA | 83,577 | 0 | 0 | 0 | 0 | 83,577 |
| TOTAL Planning, Engineering and Design | 1.00 | EA | 1,515,309 | 0 | 0 | 0 | 0 | 1,515,309 |
| 02 31 Construction Management | | | | | | | | |
| 02 31 02 Area Office S & A | 1.00 | EA | 400,000 | 0 | 0 | 0 | 0 | 400,000 |
| 02.31 03 District Office S & A | 1.00 | EA | 182,000 | 0 | 0 | 0 | 0 | 182,000 |
| TOTAL Construction Management | 1.00 | EA | 582,000 | 0 | 0 | 0 | 0 | 582,000 |
| TOTAL Item No 2, Little Bayou Meto CC | 1.00 | EA | 6,524,769 | 540,254 | 248,517 | 439,046 | 48,295 | 7,800,881 |

** PROJECT INDIRECT SUMMARY - Sub-Feat **

| | QUANTY UOM | TOTAL DIRECT | OVERHEAD | HOME OFC | PROFIT | BOND | TOTAL COST |
|---|---|---|---|---|---|---|---|
| 03 Item No. 3, Boggy Slough | | | | | | | |
| 03.01 Lands and Damages | | | | | | | |
| 03.01.02 Acquisitions | | 14,385 | 0 | 0 | 0 | 0 | 14,385 |
| 03.01.05 Appraisals | | 3,675 | 0 | 0 | 0 | 0 | 3,675 |
| 03.01.06 PL 91-646 Assistance | | 600 | 0 | 0 | 0 | 0 | 600 |
| 03.01.07 Temporary Permits/Rights of Enty | | 450 | 0 | 0 | 0 | 0 | 450 |
| 03.01.13 Project Related Administration | 1.00 EA | 360 | 0 | 0 | 0 | 0 | 360 |
| 03.01.18 Real Estate Payments | | 48,325 | 0 | 0 | 0 | 0 | 48,325 |
| TOTAL Lands and Damages | 1.00 EA | 67,795 | 0 | 0 | 0 | 0 | 67,795 |
| 03.09 Channels and Canals | | | | | | | |
| 03.09.01 Channels | 1.00 EA | 1,249,270 | 187,390 | 86,200 | 152,286 | 16,751 | 1,691,897 |
| TOTAL Channels and Canals | 1.00 EA | 1,249,270 | 187,390 | 86,200 | 152,286 | 16,751 | 1,691,897 |
| 03.11 Levees and Floodwalls | | | | | | | |
| 03.11.01 Levees | | 203,142 | 30,471 | 14,017 | 24,763 | 2,724 | 275,117 |
| TOTAL Levees and Floodwalls | 1.00 EA | 203,142 | 30,471 | 14,017 | 24,763 | 2,724 | 275,117 |
| 03.15 Floodway Control & Diversion Str | | | | | | | |
| 03.15.01 Castor Bayou Low Drop Structure | 1.00 EA | 35,209 | 5,281 | 2,429 | 4,292 | 472 | 47,684 |
| 03.15.02 L B.M. Boggy Slough @ Mi 17.65 | 1.00 EA | 219,958 | 32,994 | 15,177 | 26,813 | 2,949 | 297,891 |
| 03.15.03 Boggy Slough Div. Weir @mi 5.0 | 1.00 EA | 71,329 | 10,699 | 4,922 | 8,695 | 956 | 96,602 |
| 03.15.04 Boggy Slough Div Weir @Mi 0.1 | 1.00 EA | 98,718 | 14,808 | 6,812 | 12,034 | 1,324 | 133,695 |
| TOTAL Floodway Control & Diversion Str | 1.00 EA | 425,215 | 63,782 | 29,340 | 51,834 | 5,702 | 575,872 |
| 03.30 Planning, Engineering and Design | | | | | | | |
| 03.30.04 Construction Contract P, E, & D | 1.00 EA | 1,264,826 | 0 | 0 | 0 | 0 | 1,264,826 |
| 03.30.05 Programs and Project Management | 1.00 EA | 82,577 | 0 | 0 | 0 | 0 | 82,577 |
| TOTAL Planning, Engineering and Design | 1.00 EA | 1,347,403 | 0 | 0 | 0 | 0 | 1,347,403 |
| 03.31 Construction Management | | | | | | | |
| 03.31.02 Area Office S & A | 1.00 EA | 200,000 | 0 | 0 | 0 | 0 | 200,000 |
| 03.31.03 Districe Office S & A | 1.00 EA | 96,500 | 0 | 0 | 0 | 0 | 96,500 |

| | QUANTY | UOM | TOTAL DIRECT | OVERHEAD | HOME OFC | PROFIT | BOND | TOTAL COST |
|---|---|---|---|---|---|---|---|---|
| TOTAL Construction Management | 1.00 | EA | 296,500 | 0 | 0 | 0 | 0 | 296,500 |
| TOTAL Item No. 3, Boggy Slough | 1.00 | EA | 3,589,324 | 281,644 | 129,556 | 228,883 | 25,177 | 4,254,584 |
| 04 Item No. 4, Wabbaseka Bayou Chan | | | | | | | | |
| 04 01 Lands and Damages | | | | | | | | |
| 04.01.02 Acquisitions | | | 201,390 | 0 | 0 | 0 | 0 | 201,390 |
| 04.01.05 Appraisals | | | 51,450 | 0 | 0 | 0 | 0 | 51,450 |
| 04.01.06 PL 91-646 Assistance | | | 8,400 | 0 | 0 | 0 | 0 | 8,400 |
| 04.01.07 Temporary Permits/Rights of Enty | | | 6,300 | 0 | 0 | 0 | 0 | 6,300 |
| 04.01 13 Project Related Administration | 1.00 | EA | 5,040 | 0 | 0 | 0 | 0 | 5,040 |
| 04.01.18 Real Estate Payments | | | 279,550 | 0 | 0 | 0 | 0 | 279,550 |
| TOTAL Lands and Damages | 1.00 | EA | 552,130 | 0 | 0 | 0 | 0 | 552,130 |
| 04.09 Channels and Canals | | | | | | | | |
| 04.09.01 Channels | 1.00 | EA | 1,182,747 | 177,412 | 81,610 | 144,177 | 15,859 | 1,601,805 |
| TOTAL Channels and Canals | 1.00 | EA | 1,182,747 | 177,412 | 81,610 | 144,177 | 15,859 | 1,601,805 |
| 04.30 Planning, Engineering and Design | | | | | | | | |
| 04.30.04 Construction Contract P, E, & D | 1.00 | EA | 688,416 | 0 | 0 | 0 | 0 | 688,416 |
| 04.30.05 Programs and Project Management | 1.00 | EA | 82,577 | 0 | 0 | 0 | 0 | 82,577 |
| TOTAL Planning, Engineering and Design | 1.00 | EA | 770,993 | 0 | 0 | 0 | 0 | 770,993 |
| 04.31 Construction Management | | | | | | | | |
| 04.31.02 Area Office S & A | 1.00 | EA | 120,000 | 0 | 0 | 0 | 0 | 120,000 |
| 04.31.03 Districe Office S & A | 1.00 | EA | 61,500 | 0 | 0 | 0 | 0 | 61,500 |
| TOTAL Construction Management | 1.00 | EA | 181,500 | 0 | 0 | 0 | 0 | 181,500 |
| TOTAL Item No. 4, Wabbaseka Bayou Chan | 1.00 | EA | 2,687,370 | 177,412 | 81,610 | 144,177 | 15,859 | 3,106,428 |
| 05 Item No. 5, Indian Bayou Ditch | | | | | | | | |
| 05.01 Lands and Damages | | | | | | | | |
| 05.01.02 Acquisitions | | | 124,670 | 0 | 0 | 0 | 0 | 124,670 |
| 05.01.05 Appraisals | | | 31,850 | 0 | 0 | 0 | 0 | 31,850 |
| 05.01.06 PL 91-646 Assistance | | | 5,200 | 0 | 0 | 0 | 0 | 5,200 |

| | QUANTY UOM | TOTAL DIRECT | OVERHEAD | HOME OFC | PROFIT | BOND | TOTAL COST |
|---|---|---|---|---|---|---|---|
| 05.01.07 Temporary Permits/Rights of Enty | | 3,900 | 0 | 0 | 0 | 0 | 3,900 |
| 05.01.13 Project Related Administration | 1.00 EA | 3,120 | 0 | 0 | 0 | 0 | 3,120 |
| 05.01.18 Real Estate Payments | | 70,483 | 0 | 0 | 0 | 0 | 70,483 |
| TOTAL Lands and Damages | 1.00 EA | 239,223 | 0 | 0 | 0 | 0 | 239,223 |
| 05.09 Channels and Canals | | | | | | | |
| 05.09.03 Channels | 1.00 EA | 387,044 | 58,057 | 26,706 | 47,181 | 5,190 | 524,178 |
| TOTAL Channels and Canals | 1.00 EA | 387,044 | 58,057 | 26,706 | 47,181 | 5,190 | 524,178 |
| 05.15 Flood Control and Diversion Strs | | | | | | | |
| 05.15.01 Indian Bayou Ditch @ Mi 58.3 | 1.00 EA | 92,591 | 13,889 | 6,389 | 11,287 | 1,242 | 125,397 |
| TOTAL Flood Control and Diversion Strs | 1.00 EA | 92,591 | 13,889 | 6,389 | 11,287 | 1,242 | 125,397 |
| 05.30 Planning, Engineering and Design | | | | | | | |
| 05.30.04 Construction Contract P, E, & D | 1.00 EA | 695,978 | 0 | 0 | 0 | 0 | 695,978 |
| 05.30.05 Programs and Project Management | 1.00 EA | 82,577 | 0 | 0 | 0 | 0 | 82,577 |
| TOTAL Planning, Engineering and Design | 1.00 EA | 778,555 | 0 | 0 | 0 | 0 | 778,555 |
| 05.31 Construction Management | | | | | | | |
| 05.31.02 Area Office S & A | 1.00 EA | 50,000 | 0 | 0 | 0 | 0 | 50,000 |
| 05.31.03 District Office S & A | 1.00 EA | 25,800 | 0 | 0 | 0 | 0 | 25,800 |
| TOTAL Construction Management | 1.00 EA | 75,800 | 0 | 0 | 0 | 0 | 75,800 |
| TOTAL Item No. 5, Indian Bayou Ditch | 1.00 EA | 1,573,213 | 71,945 | 33,095 | 58,468 | 6,431 | 1,743,153 |
| 06 Item No. 6, Indian Bayou Channel | | | | | | | |
| 06 01 Lands and Damages | | | | | | | |
| 06 01.02 Acquisitions | | 369,215 | 0 | 0 | 0 | 0 | 369,215 |
| 06 01.05 Appraisals | | 94,325 | 0 | 0 | 0 | 0 | 94,325 |
| 06 01 06 PL 91-646 Assistance | | 15,400 | 0 | 0 | 0 | 0 | 15,400 |
| 06.01.07 Temporary Permits/Rights of Enty | | 11,550 | 0 | 0 | 0 | 0 | 11,550 |
| 06.01.13 Project Related Administration | 1.00 EA | 9,240 | 0 | 0 | 0 | 0 | 9,240 |
| 06.01.18 Real Estate Payments | | 118,008 | 0 | 0 | 0 | 0 | 118,008 |
| TOTAL Lands and Damages | 1.00 EA | 617,738 | 0 | 0 | 0 | 0 | 617,738 |

| | QUANTY | UOM | TOTAL DIRECT | OVERHEAD | HOME OFC | PROFIT | BOND | TOTAL COST |
|---|---|---|---|---|---|---|---|---|
| 06.09 Channels and Canals | | | | | | | | |
| 06.09.01 Channels | 1.00 | EA | 602,422 | 90,363 | 41,567 | 73,435 | 8,078 | 815,866 |
| TOTAL Channels and Canals | 1.00 | EA | 602,422 | 90,363 | 41,567 | 73,435 | 8,078 | 815,866 |
| 06.15 Flood Control and Diversion Strs | | | | | | | | |
| 06.15.03 Indian Bayou @ Mi 16.4 | 1.00 | EA | 117,376 | 17,606 | 8,099 | 14,308 | 1,574 | 158,963 |
| TOTAL Flood Control and Diversion Strs | 1.00 | EA | 117,376 | 17,606 | 8,099 | 14,308 | 1,574 | 158,963 |
| 06.30 Planning, Engineering and Design | | | | | | | | |
| 06.30.04 Construction Contract P, E, & D | 1.00 | EA | 720,628 | 0 | 0 | 0 | 0 | 720,628 |
| 06.30.05 Programs and Project Management | 1.00 | EA | 82,577 | 0 | 0 | 0 | 0 | 82,577 |
| TOTAL Planning, Engineering and Design | 1.00 | EA | 803,205 | 0 | 0 | 0 | 0 | 803,205 |
| 06.31 Construction Management | | | | | | | | |
| 06.31.02 Area Office S & A | 1.00 | EA | 80,000 | 0 | 0 | 0 | 0 | 80,000 |
| 06.31.03 District Office S & A | | | 38,000 | 0 | 0 | 0 | 0 | 38,000 |
| TOTAL Construction Management | 1.00 | EA | 118,000 | 0 | 0 | 0 | 0 | 118,000 |
| TOTAL Item No. 6, Indian Bayou Channel | 1.00 | EA | 2,258,741 | 107,970 | 49,666 | 87,743 | 9,652 | 2,513,772 |
| 07 Item No. 7, Salt Bayou Channel | | | | | | | | |
| 07.01 Lands and Damages | | | | | | | | |
| 07.01.02 Acquisitions | | | 33,565 | 0 | 0 | 0 | 0 | 33,565 |
| 07.01.05 Appraisals | | | 8,575 | 0 | 0 | 0 | 0 | 8,575 |
| 07.01.06 PL 91-646 Assistance | | | 1,400 | 0 | 0 | 0 | 0 | 1,400 |
| 07.01.07 Temporary Permits/Rights of Enty | | | 1,050 | 0 | 0 | 0 | 0 | 1,050 |
| 07.01.13 Project Related Administration | 1.00 | EA | 840 | 0 | 0 | 0 | 0 | 840 |
| 07.01.18 Real Estate Payments | | | 84,000 | 0 | 0 | 0 | 0 | 84,000 |
| TOTAL Lands and Damages | 1.00 | EA | 129,430 | 0 | 0 | 0 | 0 | 129,430 |
| 07.09 Channels and Canals | | | | | | | | |
| 07.09.01 Channels | 1.00 | EA | 417,736 | 62,660 | 28,824 | 50,922 | 5,601 | 565,743 |
| TOTAL Channels and Canals | 1.00 | EA | 417,736 | 62,660 | 28,824 | 50,922 | 5,601 | 565,743 |

| | QUANTY UOM | TOTAL DIRECT | OVERHEAD | HOME OFC | PROFIT | BOND | TOTAL COST |
|---|---|---|---|---|---|---|---|
| 07.30 Planning, Engineering and Design | | | | | | | |
| 07.30.04 Construction Contract P, E, & D | 1.00 EA | 433,860 | 0 | 0 | 0 | 0 | 433,860 |
| 07.30.05 Programs and Project Management | 1.00 EA | 82,577 | 0 | 0 | 0 | 0 | 82,577 |
| TOTAL Planning, Engineering and Design | 1.00 EA | 516,437 | 0 | 0 | 0 | 0 | 516,437 |
| 07.31 Construction Management | | | | | | | |
| 07.31.02 Area Office S & A | 1.00 EA | 80,000 | 0 | 0 | 0 | 0 | 80,000 |
| 07.31.03 Districe Office S & A | 1.00 EA | 36,000 | 0 | 0 | 0 | 0 | 36,000 |
| TOTAL Construction Management | 1.00 EA | 116,000 | 0 | 0 | 0 | 0 | 116,000 |
| TOTAL Item No. 7, Salt Bayou Channel | 1.00 EA | 1,179,603 | 62,660 | 28,824 | 50,922 | 5,601 | 1,327,610 |
| 08 Item No. 8, Crooked Creek | | | | | | | |
| 08.01 Lands and Damages | | | | | | | |
| 08.01.02 Acquisitions | | 234,955 | 0 | 0 | 0 | 0 | 234,955 |
| 08.01.05 Appraisals | | 60,025 | 0 | 0 | 0 | 0 | 60,025 |
| 08.01.06 PL 91-646 Assistance | | 9,800 | 0 | 0 | 0 | 0 | 9,800 |
| 08.01.07 Temporary Permits/Rights of Enty | | 7,350 | 0 | 0 | 0 | 0 | 7,350 |
| 08.01.13 Project Related Administration | 1.00 EA | 5,880 | 0 | 0 | 0 | 0 | 5,880 |
| 08.01.18 Real Estate Payments | | 94,642 | 0 | 0 | 0 | 0 | 94,642 |
| TOTAL Lands and Damages | 1.00 EA | 412,652 | 0 | 0 | 0 | 0 | 412,652 |
| 08.09 Channels and Canals | | | | | | | |
| 08.09.01 Channels | 1.00 EA | 1,399,515 | 209,927 | 96,567 | 170,601 | 18,766 | 1,895,376 |
| TOTAL Channels and Canals | 1.00 EA | 1,399,515 | 209,927 | 96,567 | 170,601 | 18,766 | 1,895,376 |
| 08.15 Flood Control and Diversion Strs | | | | | | | |
| 08.15.01 Wier @ Mi 4.3 | 1.00 EA | 10,000 | 1,500 | 690 | 1,219 | 134 | 13,543 |
| 08.15.02 Wier @ Mi. 13.3 | 1.00 EA | 10,000 | 1,500 | 690 | 1,219 | 134 | 13,543 |
| TOTAL Flood Control and Diversion Strs | 1.00 EA | 20,000 | 3,000 | 1,380 | 2,438 | 268 | 27,086 |
| 08.30 Planning, Engineering and Design | | | | | | | |
| 08.30.04 Construction Contract P, E, & D | 1.00 EA | 1,009,343 | 0 | 0 | 0 | 0 | 1,009,343 |

| | QUANTY UOM | TOTAL DIRECT | OVERHEAD | HOME OFC | PROFIT | BOND | TOTAL COST |
|---|---|---|---|---|---|---|---|
| 08.30 05 Programs and Project Management | 1.00 EA | 82,577 | 0 | 0 | 0 | 0 | 82,577 |
| TOTAL Planning, Engineering and Design | 1.00 EA | 1,091,920 | 0 | 0 | 0 | 0 | 1,091,920 |
| 08.31 Construction Management | | | | | | | |
| 08.31.02 Area Office S & A | 1.00 EA | 150,000 | 0 | 0 | 0 | 0 | 150,000 |
| 08.31.03 Districe Office S & A | | 71,500 | 0 | 0 | 0 | 0 | 71,500 |
| TOTAL Construction Management | 1.00 EA | 221,500 | 0 | 0 | 0 | 0 | 221,500 |
| TOTAL Item No. 8, Crooked Creek | 1.00 EA | 3,145,587 | 212,927 | 97,947 | 173,039 | 19,034 | 3,648,534 |
| 09 Item No. 9, Big Bayou Meto Div | | | | | | | |
| 09.01 Lands and Damages | | | | | | | |
| 09.01.01 Project Planning | 1.00 EA | 3,800 | 0 | 0 | 0 | 0 | 3,800 |
| 09.01.02 Acquisitions | | 67,130 | 0 | 0 | 0 | 0 | 67,130 |
| 09.01.05 Appraisals | | 17,150 | 0 | 0 | 0 | 0 | 17,150 |
| 09.01.06 PL 91-646 Assistance | | 2,800 | 0 | 0 | 0 | 0 | 2,800 |
| 09.01.07 Temporary Permits/Rights of Enty | | 2,100 | 0 | 0 | 0 | 0 | 2,100 |
| 09.01.13 Project Related Administration | 1.00 EA | 1,680 | 0 | 0 | 0 | 0 | 1,680 |
| 09.01.18 Real Estate Payments | | 64,183 | 0 | 0 | 0 | 0 | 64,183 |
| TOTAL Lands and Damages | 1.00 EA | 158,843 | 0 | 0 | 0 | 0 | 158,843 |
| 09.02 Relocations | | | | | | | |
| 09.02.01 Roads, Construction Activities | | 519,000 | 0 | 0 | 0 | 0 | 519,000 |
| 09.02.03 Cemetery, Utilities, & Structure | | 115,000 | 0 | 0 | 0 | 0 | 115,000 |
| TOTAL Relocations | 1.00 EA | 634,000 | 0 | 0 | 0 | 0 | 634,000 |
| 09.09 Channels and Canals | | | | | | | |
| 09.09.01 Channels | 1.00 EA | 1,429,357 | 214,403 | 98,626 | 174,239 | 19,166 | 1,935,791 |
| TOTAL Channels and Canals | 1.00 EA | 1,429,357 | 214,403 | 98,626 | 174,239 | 19,166 | 1,935,791 |
| 09 11 Levees and Floodwalls | | | | | | | |
| 09.11.01 Levees | | 319,214 | 47,882 | 22,026 | 38,912 | 4,280 | 432,314 |
| TOTAL Levees and Floodwalls | 1.00 EA | 319,214 | 47,882 | 22,026 | 38,912 | 4,280 | 432,314 |

| | QUANTY | UOM | TOTAL DIRECT | OVERHEAD | HOME OFC | PROFIT | BOND | TOTAL COST |
|---|---|---|---|---|---|---|---|---|
| 09.15 Flood Control and Diversion Strs | | | | | | | | |
| 09.15.01 B.B.M. Diversion Wier Mi 0.0 | 1.00 | EA | 42,783 | 6,418 | 2,952 | 5,215 | 574 | 57,942 |
| 09.15.02 B.B.M. Diversion Mi 2.5 Low Wier | 1.00 | EA | 42,783 | 6,418 | 2,952 | 5,215 | 574 | 57,942 |
| TOTAL Flood Control and Diversion Strs | 1.00 | EA | 85,567 | 12,835 | 5,904 | 10,431 | 1,147 | 115,884 |
| 09 30 Planning, Engineering and Design | | | | | | | | |
| 09.30.04 Construction Contract P, E, & D | 1.00 | EA | 1,158,011 | 0 | 0 | 0 | 0 | 1,158,011 |
| 09.30.05 Programs and Project Management | 1.00 | EA | 82,577 | 0 | 0 | 0 | 0 | 82,577 |
| TOTAL Planning, Engineering and Design | 1.00 | EA | 1,240,588 | 0 | 0 | 0 | 0 | 1,240,588 |
| 09.31 Construction Management | | | | | | | | |
| 09.31.02 Area Office S & A | 1.00 | EA | 200,000 | 0 | 0 | 0 | 0 | 200,000 |
| 09.31.03 Districe Office S & A | | | 95,500 | 0 | 0 | 0 | 0 | 95,500 |
| TOTAL Construction Management | 1.00 | EA | 295,500 | 0 | 0 | 0 | 0 | 295,500 |
| TOTAL Item No. 9, Big Bayou Meto Div. | 1.00 | EA | 4,163,068 | 275,121 | 126,555 | 223,581 | 24,594 | 4,812,919 |
| 10 Item No. 10, Mitigation | | | | | | | | |
| 10.01 Lands and Damages | | | | | | | | |
| 10.01.02 Acquisitions | 1.00 | EA | 47,950 | 0 | 0 | 0 | 0 | 47,950 |
| 10.01.05 Appraisal | 1.00 | EA | 12,250 | 0 | 0 | 0 | 0 | 12,250 |
| 10.01.06 PL 91-646 Assistance | 1.00 | EA | 2,000 | 0 | 0 | 0 | 0 | 2,000 |
| 10.01.07 Temp Permits/Licenses/Rights | 1.00 | EA | 1,500 | 0 | 0 | 0 | 0 | 1,500 |
| 10.01.13 Project Related Admin | 1.00 | EA | 1,200 | 0 | 0 | 0 | 0 | 1,200 |
| 10.01.18 Real Estate Payments | | | 2,633,550 | 0 | 0 | 0 | 0 | 2,633,550 |
| TOTAL Lands and Damages | 1.00 | EA | 2,698,450 | 0 | 0 | 0 | 0 | 2,698,450 |
| 10.06 Fish and Wildlife Facilities | | | | | | | | |
| 10.06.03 Wildlife Facilities | 1.00 | EA | 415,350 | 62,303 | 28,659 | 50,631 | 5,569 | 562,512 |
| TOTAL Fish and Wildlife Facilities | 1.00 | EA | 415,350 | 62,303 | 28,659 | 50,631 | 5,569 | 562,512 |
| 10.30 Planning, Engineering & Design | 1.00 | EA | 203,200 | 0 | 0 | 0 | 0 | 203,200 |
| 10.31 Construction Management | 1.00 | EA | 101,600 | 0 | 0 | 0 | 0 | 101,600 |
| TOTAL Item No. 10, Mitigation | 1.00 | EA | 3,418,600 | 62,303 | 28,659 | 50,631 | 5,569 | 3,565,762 |

** PROJECT INDIRECT SUMMARY - Sub-Feat **

| | QUANTY | UOM | TOTAL DIRECT | OVERHEAD | HOME OPC | PROFIT | BOND | TOTAL COST |
|---|---|---|---|---|---|---|---|---|
| TOTAL Bayou Meto Selected Plan | 1.00 | EA | 42,767,998 | 3,338,336 | 1,535,635 | 2,712,955 | 298,425 | 50,653,349 |
| CONTINGENCIES | | | | | | | | 11,023,222 |
| SUBTOTAL | | | | | | | | 61,676,571 |
| ESCALATION | | | | | | | | 6,411,908 |
| TOTAL INCL OWNER COSTS | | | | | | | | 68,088,479 |

** PROJECT DIRECT SUMMARY - Contract **

| | QUANTY | UOM | LABOR | EQUIPMNT | MATERIAL | OTHER | TOTAL COST |
|---|---|---|---|---|---|---|---|
| 01 Little Bayou Meto 1000 CFS Pump | 1.00 | EA | 4,227,294 | 692,179 | 5,481,049 | 3,827,200 | 14,227,722 |
| 02 Item No. 2, Little Bayou Meto CC | 1.00 | EA | 2,717,067 | 2,288,564 | 207,763 | 1,311,375 | 6,524,769 |
| 03 Item No. 3, Boggy Slough | 1.00 | EA | 1,885,839 | 917,840 | 304,189 | 481,455 | 3,589,324 |
| 04 Item No. 4, Wabbaseka Bayou Chan | 1.00 | EA | 885,906 | 239,954 | 0 | 1,561,510 | 2,687,370 |
| 05 Item No. 5, Indian Bayou Ditch | 1.00 | EA | 878,766 | 240,175 | 59,330 | 394,943 | 1,573,213 |
| 06 Item No. 6, Indian Bayou Channel | 1.00 | EA | 881,734 | 45,839 | 77,790 | 1,253,378 | 2,258,741 |
| 07 Item No. 7, Salt Bayou Channel | 1.00 | EA | 635,617 | 12,656 | 0 | 531,330 | 1,179,603 |
| 08 Item No. 8, Crooked Creek | 1.00 | EA | 1,512,028 | 931,467 | 0 | 702,092 | 3,145,587 |
| 09 Item No. 9, Big Bayou Meto Div. | 1.00 | EA | 1,839,439 | 1,178,121 | 66,825 | 1,078,683 | 4,163,068 |
| 10 Item No. 10, Mitigation | 1.00 | EA | 0 | 0 | 0 | 3,418,600 | 3,418,600 |
| TOTAL Bayou Meto Selected Plan | 1.00 | EA | 15463690 | 6,546,795 | 6,196,946 | 14,560,566 | 42,767,998 |

| | |
|---|---|
| Prime Contractor's Field Overhead | 3,338,336 |
| SUBTOTAL | 46,106,334 |
| Prime's Home Office Expense | 1,535,635 |
| SUBTOTAL | 47,641,969 |
| Prime Contractor's PROFIT | 2,712,955 |
| SUBTOTAL | 50,354,924 |
| BOND | 298,425 |
| TOTAL INCL INDIRECTS | 50,653,349 |
| CONTINGENCIES | 11,023,222 |
| SUBTOTAL | 61,676,571 |
| ESCALATION | 6,411,908 |
| TOTAL INCL OWNER COSTS | 68,088,479 |

** PROJECT DIRECT SUMMARY Feature **

| | QUANTY | UOM | LABOR | EQUIPMNT | MATERIAL | OTHER | TOTAL COST |
|---|---|---|---|---|---|---|---|
| 01 Little Bayou Meto 1000 CFS Pump | | | | | | | |
| 01.01 Lands and Damages | 1.00 | EA | 0 | 0 | 0 | 39,995 | 39,995 |
| 01.15 Pumping Plant | 1.00 | EA | 356,189 | 692,179 | 5,481,049 | 3,777,925 | 10,307,342 |
| 01.30 Planning, Engineering and Design | 1.00 | EA | 2,168,105 | 0 | 0 | 9,280 | 2,177,385 |
| 01.31 Construction Management | 1.00 | EA | 1,703,000 | 0 | 0 | 0 | 1,703,000 |
| TOTAL Little Bayou Meto 1000 CFS Pump | 1.00 | EA | 4,227,294 | 692,179 | 5,481,049 | 3,827,200 | 14,227,722 |
| 02 Item No. 2, Little Bayou Meto CC | | | | | | | |
| 02.01 Lands and Damages | 1.00 | EA | 0 | 0 | 0 | 310,570 | 310,570 |
| 02.02 Relocations | 1.00 | EA | 0 | 0 | 0 | 515,200 | 515,200 |
| 02.09 Channels and Canals | 1.00 | EA | 512,998 | 2,041,634 | 0 | 322,500 | 2,877,131 |
| 02.11 Levees and Floodwalls | 1.00 | EA | 34,278 | 112,519 | 0 | 70,000 | 216,797 |
| 02.15 Floodway Control & Diversion Str | 1.00 | EA | 118,882 | 134,412 | 207,763 | 46,705 | 507,762 |
| 02.30 Planning, Engineering and Design | 1.00 | EA | 1,468,909 | 0 | 0 | 46,400 | 1,515,309 |
| 02.31 Construction Management | 1.00 | EA | 582,000 | 0 | 0 | 0 | 582,000 |
| TOTAL Item No. 2, Little Bayou Meto CC | 1.00 | EA | 2,717,067 | 2,288,564 | 207,763 | 1,311,375 | 6,524,769 |
| 03 Item No 3, Boggy Slough | | | | | | | |
| 03.01 Lands and Damages | 1.00 | EA | 0 | 0 | 0 | 67,795 | 67,795 |
| 03.09 Channels and Canals | 1.00 | EA | 186,507 | 742,263 | 0 | 320,500 | 1,249,270 |
| 03.11 Levees and Floodwalls | 1.00 | EA | 31,090 | 102,052 | 0 | 70,000 | 203,142 |
| 03.15 Floodway Control & Diversion Str | 1.00 | EA | 36,500 | 73,526 | 304,189 | 11,000 | 425,215 |
| 03.30 Planning, Engineering and Design | 1.00 | EA | 1,335,243 | 0 | 0 | 12,160 | 1,347,403 |
| 03.31 Construction Management | 1.00 | EA | 296,500 | 0 | 0 | 0 | 296,500 |
| TOTAL Item No. 3, Boggy Slough | 1.00 | EA | 1,885,839 | 917,840 | 304,189 | 481,455 | 3,589,324 |
| 04 Item No. 4, Wabbaseka Bayou Chan | | | | | | | |
| 04.01 Lands and Damages | 1.00 | EA | 0 | 0 | 0 | 552,130 | 552,130 |
| 04.09 Channels and Canals | 1.00 | EA | 60,293 | 239,954 | 0 | 882,500 | 1,182,747 |
| 04.30 Planning, Engineering and Design | 1.00 | EA | 644,113 | 0 | 0 | 126,880 | 770,993 |
| 04.31 Construction Management | 1.00 | EA | 181,500 | 0 | 0 | 0 | 181,500 |
| TOTAL Item No. 4, Wabbaseka Bayou Chan | 1.00 | EA | 885,906 | 239,954 | 0 | 1,561,510 | 2,687,370 |
| 05 Item No. 5, Indian Bayou Ditch | | | | | | | |
| 05.01 Lands and Damages | 1.00 | EA | 0 | 0 | 0 | 239,223 | 239,223 |
| 05.09 Channels and Canals | 1.00 | EA | 57,240 | 227,804 | 0 | 102,000 | 387,044 |
| 05.15 Flood Control and Diversion Strs | 1.00 | EA | 5,891 | 12,371 | 59,330 | 15,000 | 92,591 |

| | QUANTY | UOM | LABOR | EQUIPMNT | MATERIAL | OTHER | TOTAL COST |
|---|---|---|---|---|---|---|---|
| 05.30 Planning, Engineering and Design | 1.00 | EA | 739,835 | 0 | 0 | 38,720 | 778,555 |
| 05.31 Construction Management | 1.00 | EA | 75,800 | 0 | 0 | 0 | 75,800 |
| TOTAL Item No. 5, Indian Bayou Ditch | 1.00 | EA | 878,766 | 240,175 | 59,330 | 394,943 | 1,573,213 |
| 06 Item No 6, Indian Bayou Channel | | | | | | | |
| 06.01 Lands and Damages | 1.00 | EA | 0 | 0 | 0 | 617,738 | 617,738 |
| 06.09 Channels and Canals | 1.00 | EA | 7,314 | 29,108 | 0 | 566,000 | 602,422 |
| 06.15 Flood Control and Diversion Strs | 1.00 | EA | 7,855 | 16,731 | 77,790 | 15,000 | 117,376 |
| 06.30 Planning, Engineering and Design | 1.00 | EA | 748,565 | 0 | 0 | 54,640 | 803,205 |
| 06.31 Construction Management | 1.00 | EA | 118,000 | 0 | 0 | 0 | 118,000 |
| TOTAL Item No. 6, Indian Bayou Channel | 1.00 | EA | 881,734 | 45,839 | 77,790 | 1,253,378 | 2,258,741 |
| 07 Item No. 7, Salt Bayou Channel | | | | | | | |
| 07.01 Lands and Damages | 1.00 | EA | 0 | 0 | 0 | 129,430 | 129,430 |
| 07.09 Channels and Canals | 1.00 | EA | 3,180 | 12,656 | 0 | 401,900 | 417,736 |
| 07.30 Planning, Engineering and Design | 1.00 | EA | 516,437 | 0 | 0 | 0 | 516,437 |
| 07.31 Construction Management | 1.00 | EA | 116,000 | 0 | 0 | 0 | 116,000 |
| TOTAL Item No. 7, Salt Bayou Channel | 1.00 | EA | 635,617 | 12,656 | 0 | 531,330 | 1,179,603 |
| 08 Item No. 8, Crooked Creek | | | | | | | |
| 08.01 Lands and Damages | 1.00 | EA | 0 | 0 | 0 | 412,652 | 412,652 |
| 08.09 Channels and Canals | 1.00 | EA | 234,048 | 931,467 | 0 | 234,000 | 1,399,515 |
| 08.15 Flood Control and Diversion Strs | 1.00 | EA | 0 | 0 | 0 | 20,000 | 20,000 |
| 08.30 Planning, Engineering and Design | 1.00 | EA | 1,056,480 | 0 | 0 | 35,440 | 1,091,920 |
| 08.31 Construction Management | 1.00 | EA | 221,500 | 0 | 0 | 0 | 221,500 |
| TOTAL Item No. 8, Crooked Creek | 1.00 | EA | 1,512,028 | 931,467 | 0 | 702,092 | 3,145,587 |
| 09 Item No. 9, Big Bayou Meto Div. | | | | | | | |
| 09.01 Lands and Damages | 1.00 | EA | 0 | 0 | 0 | 158,843 | 158,843 |
| 09.02 Relocations | 1.00 | EA | 0 | 0 | 0 | 634,000 | 634,000 |
| 09.09 Channels and Canals | 1.00 | EA | 244,860 | 974,497 | 0 | 210,000 | 1,429,357 |
| 09.11 Levees and Floodwalls | 1.00 | EA | 58,193 | 191,020 | 0 | 70,000 | 319,214 |
| 09.15 Flood Control and Diversion Strs | 1.00 | EA | 6,137 | 12,604 | 66,825 | 0 | 85,567 |
| 09.30 Planning, Engineering and Design | 1.00 | EA | 1,234,748 | 0 | 0 | 5,840 | 1,240,588 |
| 09.31 Construction Management | 1.00 | EA | 295,500 | 0 | 0 | 0 | 295,500 |
| TOTAL Item No. 9, Big Bayou Meto Div. | 1.00 | EA | 1,839,439 | 1,178,121 | 66,825 | 1,078,683 | 4,163,068 |

** PROJECT DIRECT SUMMARY - Feature **

| | QUANTY | UOM | LABOR | EQUIPMNT | MATERIAL | OTHER | TOTAL COST |
|---|---|---|---|---|---|---|---|
| 10 Item No. 10, Mitigation | | | | | | | |
| 10.01 Lands and Damages | 1.00 | EA | 0 | 0 | 0 | 2,698,450 | 2,698,450 |
| 10.06 Fish and Wildlife Facilities | 1.00 | EA | 0 | 0 | 0 | 415,350 | 415,350 |
| 10.30 Planning, Engineering & Design | 1.00 | EA | 0 | 0 | 0 | 203,200 | 203,200 |
| 10.31 Construction Management | 1.00 | EA | 0 | 0 | 0 | 101,600 | 101,600 |
| TOTAL Item No. 10, Mitigation | 1.00 | EA | 0 | 0 | 0 | 3,418,600 | 3,418,600 |
| TOTAL Bayou Meto Selected Plan | 1.00 | EA | 15463690 | 6,546,795 | 6,196,946 | 14,560,566 | 42,767,998 |
| Prime Contractor's Field Overhead | | | | | | | 3,338,336 |
| SUBTOTAL | | | | | | | 46,106,334 |
| Prime's Home Office Expense | | | | | | | 1,535,635 |
| SUBTOTAL | | | | | | | 47,641,969 |
| Prime Contractor's PROFIT | | | | | | | 2,712,955 |
| SUBTOTAL | | | | | | | 50,354,924 |
| BOND | | | | | | | 298,425 |
| TOTAL INCL INDIRECTS | | | | | | | 50,653,349 |
| CONTINGENCIES | | | | | | | 11,023,222 |
| SUBTOTAL | | | | | | | 61,676,571 |
| ESCALATION | | | | | | | 6,411,908 |
| TOTAL INCL OWNER COSTS | | | | | | | 68,088,479 |

** PROJECT DIRECT SUMMARY - Sub-Feat **

| | QUANTY | UOM | LABOR | EQUIPMNT | MATERIAL | OTHER | TOTAL COST |
|---|---|---|---|---|---|---|---|
| 01 Little Bayou Meto 1000 CFS Pump | | | | | | | |
| 01.01 Lands and Damages | | | | | | | |
| 01.01.02 Acquisitions | | | 0 | 0 | 0 | 14,385 | 14,385 |
| 01.01.05 Appraisals | | | 0 | 0 | 0 | 3,675 | 3,675 |
| 01.01.06 PL 91-646 Assistance | | | 0 | 0 | 0 | 600 | 600 |
| 01.01.07 Temporary Permits/Rights of Enty | | | 0 | 0 | 0 | 450 | 450 |
| 01.01.13 Project Related Administration | 1.00 | EA | 0 | 0 | 0 | 360 | 360 |
| 01.01.18 Real Estate Payments | | | 0 | 0 | 0 | 20,525 | 20,525 |
| TOTAL Lands and Damages | 1.00 | EA | 0 | 0 | 0 | 39,995 | 39,995 |
| 01.15 Pumping Plant | | | | | | | |
| 01.15.10 Little Bayou Meto 1000 CFS Pumps | 1.00 | EA | 356,189 | 692,179 | 5,481,049 | 3,777,925 | 10,307,342 |
| TOTAL Pumping Plant | 1.00 | EA | 356,189 | 692,179 | 5,481,049 | 3,777,925 | 10,307,342 |
| 01.30 Planning, Engineering and Design | | | | | | | |
| 01.30.04 Construction Contract P, E, & D | 1.00 | EA | 2,085,528 | 0 | 0 | 9,280 | 2,094,808 |
| 01.30.05 Programs and Project Management | 1.00 | EA | 82,577 | 0 | 0 | 0 | 82,577 |
| TOTAL Planning, Engineering and Design | 1.00 | EA | 2,168,105 | 0 | 0 | 9,280 | 2,177,385 |
| 01.31 Construction Management | | | | | | | |
| 01.31.02 Area Office S & A | 1.00 | EA | 1,200,000 | 0 | 0 | 0 | 1,200,000 |
| 01.31.03 Districe Office S & A | | | 503,000 | 0 | 0 | 0 | 503,000 |
| TOTAL Construction Management | 1.00 | EA | 1,703,000 | 0 | 0 | 0 | 1,703,000 |
| TOTAL Little Bayou Meto 1000 CFS Pump | 1.00 | EA | 4,227,294 | 692,179 | 5,481,049 | 3,827,200 | 14,227,722 |
| 02 Item No. 2, Little Bayou Meto CC | | | | | | | |
| 02.01 Lands and Damages | | | | | | | |
| 02.01.01 Project Planning | 1.00 | EA | 0 | 0 | 0 | 3,800 | 3,800 |
| 02.01.02 Acquisitions | | | 0 | 0 | 0 | 86,310 | 86,310 |
| 02.01.05 Appraisals | | | 0 | 0 | 0 | 22,050 | 22,050 |
| 02.01.06 PL 91-646 Assistance | | | 0 | 0 | 0 | 3,600 | 3,600 |
| 02.01.07 Temporary Permits/Rights of Enty | | | 0 | 0 | 0 | 2,700 | 2,700 |
| 02.01.13 Project Related Administration | 1.00 | EA | 0 | 0 | 0 | 2,160 | 2,160 |

** PROJECT DIRECT SUMMARY - Sub Feat **

| | QUANTY | UOM | LABOR | EQUIPMNT | MATERIAL | OTHER | TOTAL COST |
|---|---|---|---|---|---|---|---|
| 02.01.18 Real Estate Payments | | | 0 | 0 | 0 | 189,950 | 189,950 |
| TOTAL Lands and Damages | 1.00 | EA | 0 | 0 | 0 | 310,570 | 310,570 |
| 02.02 Relocations | | | | | | | |
| 02.02.01 Roads, Construction Activities | | | 0 | 0 | 0 | 453,000 | 453,000 |
| 02.02.03 Cemetery, Utilities, & Structure | | | 0 | 0 | 0 | 62,200 | 62,200 |
| TOTAL Relocations | 1.00 | EA | 0 | 0 | 0 | 515,200 | 515,200 |
| 02.09 Channels and Canals | | | | | | | |
| 02.09.01 Channels | 1.00 | EA | 512,998 | 2,041,634 | 0 | 322,500 | 2,877,131 |
| TOTAL Channels and Canals | 1.00 | EA | 512,998 | 2,041,634 | 0 | 322,500 | 2,877,131 |
| 02.11 Levees and Floodwalls | | | | | | | |
| 02.11.01 Levees | | | 34,278 | 112,519 | 0 | 70,000 | 216,797 |
| TOTAL Levees and Floodwalls | 1.00 | EA | 34,278 | 112,519 | 0 | 70,000 | 216,797 |
| 02.15 Floodway Control & Diversion Str | | | | | | | |
| 02.15.15 Cannon Break Control Stru (1K) | 1.00 | EA | 118,882 | 134,412 | 207,763 | 46,705 | 507,762 |
| TOTAL Floodway Control & Diversion Str | 1.00 | EA | 118,882 | 134,412 | 207,763 | 46,705 | 507,762 |
| 02.30 Planning, Engineering and Design | | | | | | | |
| 02.30.04 Construction Contract P, E, & D | 1.00 | EA | 1,385,332 | 0 | 0 | 46,400 | 1,431,732 |
| 02.30.05 Programs and Project Management | 1.00 | EA | 83,577 | 0 | 0 | 0 | 83,577 |
| TOTAL Planning, Engineering and Design | 1.00 | EA | 1,468,909 | 0 | 0 | 46,400 | 1,515,309 |
| 02.31 Construction Management | | | | | | | |
| 02.31.02 Area Office S & A | 1.00 | EA | 400,000 | 0 | 0 | 0 | 400,000 |
| 02.31.03 District Office S & A | 1.00 | EA | 182,000 | 0 | 0 | 0 | 182,000 |
| TOTAL Construction Management | 1.00 | EA | 582,000 | 0 | 0 | 0 | 582,000 |
| TOTAL Item No. 2, Little Bayou Meto CC | 1.00 | EA | 2,717,067 | 2,288,564 | 207,763 | 1,311,375 | 6,524,769 |

** PROJECT DIRECT SUMMARY - Sub-Feat **

| | QUANTY | UOM | LABOR | EQUIPMNT | MATERIAL | OTHER | TOTAL COST |
|---|---|---|---|---|---|---|---|
| 03 Item No. 3, Boggy Slough | | | | | | | |
| 03.01 Lands and Damages | | | | | | | |
| 03.01.02 Acquisitions | | | 0 | 0 | 0 | 14,385 | 14,385 |
| 03.01.05 Appraisals | | | 0 | 0 | 0 | 3,675 | 3,675 |
| 03.01.06 PL 91-646 Assistance | | | 0 | 0 | 0 | 600 | 600 |
| 03.01.07 Temporary Permits/Rights of Enty | | | 0 | 0 | 0 | 450 | 450 |
| 03.01.13 Project Related Administration | 1.00 | EA | 0 | 0 | 0 | 360 | 360 |
| 03.01.18 Real Estate Payments | | | 0 | 0 | 0 | 48,325 | 48,325 |
| TOTAL Lands and Damages | 1.00 | EA | 0 | 0 | 0 | 67,795 | 67,795 |
| 03.09 Channels and Canals | | | | | | | |
| 03.09.01 Channels | 1.00 | EA | 186,507 | 742,263 | 0 | 320,500 | 1,249,270 |
| TOTAL Channels and Canals | 1.00 | EA | 186,507 | 742,263 | 0 | 320,500 | 1,249,270 |
| 03.11 Levees and Floodwalls | | | | | | | |
| 03.11.01 Levees | | | 31,090 | 102,052 | 0 | 70,000 | 203,142 |
| TOTAL Levees and Floodwalls | 1.00 | EA | 31,090 | 102,052 | 0 | 70,000 | 203,142 |
| 03.15 Floodway Control & Diversion Str | | | | | | | |
| 03.15.01 Castor Bayou Low Drop Structure | 1.00 | EA | 2,378 | 2,479 | 28,353 | 2,000 | 35,209 |
| 03.15.02 L.B.M. Boggy Slough @ Mi 17.65 | 1.00 | EA | 22,056 | 47,429 | 145,473 | 5,000 | 219,958 |
| 03.15.03 Boggy Slough Div. Weir @mi 5.0 | 1.00 | EA | 5,372 | 11,482 | 52,476 | 2,000 | 71,329 |
| 03.15.04 Boggy Slough Div. Weir @Mi 0.1 | 1.00 | EA | 6,694 | 12,136 | 77,888 | 2,000 | 98,718 |
| TOTAL Floodway Control & Diversion Str | 1.00 | EA | 36,500 | 73,526 | 304,189 | 11,000 | 425,215 |
| 03.30 Planning, Engineering and Design | | | | | | | |
| 03.30.04 Construction Contract P, E, & D | 1.00 | EA | 1,252,666 | 0 | 0 | 12,160 | 1,264,826 |
| 03.30.05 Programs and Project Management | 1.00 | EA | 82,577 | 0 | 0 | 0 | 82,577 |
| TOTAL Planning, Engineering and Design | 1.00 | EA | 1,335,243 | 0 | 0 | 12,160 | 1,347,403 |
| 03.31 Construction Management | | | | | | | |
| 03.31.02 Area Office S & A | 1.00 | EA | 200,000 | 0 | 0 | 0 | 200,000 |
| 03.31.03 Districe Office S & A | 1.00 | EA | 96,500 | 0 | 0 | 0 | 96,500 |

| | QUANTY | UOM | LABOR | EQUIPMNT | MATERIAL | OTHER | TOTAL COST |
|---|---|---|---|---|---|---|---|
| TOTAL Construction Management | 1.00 | EA | 296,500 | 0 | 0 | 0 | 296,500 |
| TOTAL Item No. 3, Boggy Slough | 1.00 | EA | 1,885,839 | 917,840 | 304,189 | 481,455 | 3,589,324 |
| 04 Item No. 4, Wabbaseka Bayou Chan | | | | | | | |
| 04.01 Lands and Damages | | | | | | | |
| 04.01.02 Acquisitions | | | 0 | 0 | 0 | 201,390 | 201,390 |
| 04.01.05 Appraisals | | | 0 | 0 | 0 | 51,450 | 51,450 |
| 04.01.06 PL 91 646 Assistance | | | 0 | 0 | 0 | 8,400 | 8,400 |
| 04.01.07 Temporary Permits/Rights of Enty | | | 0 | 0 | 0 | 6,300 | 6,300 |
| 04.01.13 Project Related Administration | 1.00 | EA | 0 | 0 | 0 | 5,040 | 5,040 |
| 04.01.18 Real Estate Payments | | | 0 | 0 | 0 | 279,550 | 279,550 |
| TOTAL Lands and Damages | 1.00 | EA | 0 | 0 | 0 | 552,130 | 552,130 |
| 04.09 Channels and Canals | | | | | | | |
| 04.09.01 Channels | 1.00 | EA | 60,293 | 239,954 | 0 | 882,500 | 1,182,747 |
| TOTAL Channels and Canals | 1.00 | EA | 60,293 | 239,954 | 0 | 882,500 | 1,182,747 |
| 04.30 Planning, Engineering and Design | | | | | | | |
| 04.30.04 Construction Contract P, E, & D | 1.00 | EA | 561,536 | 0 | 0 | 126,880 | 688,416 |
| 04.30.05 Programs and Project Management | 1.00 | EA | 82,577 | 0 | 0 | 0 | 82,577 |
| TOTAL Planning, Engineering and Design | 1.00 | EA | 644,113 | 0 | 0 | 126,880 | 770,993 |
| 04.31 Construction Management | | | | | | | |
| 04.31.02 Area Office S & A | 1.00 | EA | 120,000 | 0 | 0 | 0 | 120,000 |
| 04.31.03 Districe Office S & A | 1.00 | EA | 61,500 | 0 | 0 | 0 | 61,500 |
| TOTAL Construction Management | 1.00 | EA | 181,500 | 0 | 0 | 0 | 181,500 |
| TOTAL Item No 4, Wabbaseka Bayou Chan | 1.00 | EA | 885,906 | 239,954 | 0 | 1,561,510 | 2,687,370 |
| 05 Item No. 5, Indian Bayou Ditch | | | | | | | |
| 05.01 Lands and Damages | | | | | | | |
| 05.01.02 Acquisitions | | | 0 | 0 | 0 | 124,670 | 124,670 |
| 05.01.05 Appraisals | | | 0 | 0 | 0 | 31,850 | 31,850 |
| 05.01.06 PL 91 646 Assistance | | | 0 | 0 | 0 | 5,200 | 5,200 |

** PROJECT DIRECT SUMMARY - Sub-Feat **

| | QUANTY | UOM | LABOR | EQUIPMNT | MATERIAL | OTHER | TOTAL COST |
|---|---|---|---|---|---|---|---|
| 05.01.07 Temporary Permits/Rights of Enty | | | 0 | 0 | 0 | 3,900 | 3,900 |
| 05.01.13 Project Related Administration | 1.00 | EA | 0 | 0 | 0 | 3,120 | 3,120 |
| 05 01.18 Real Estate Payments | | | 0 | 0 | 0 | 70,483 | 70,483 |
| TOTAL Lands and Damages | 1.00 | EA | 0 | 0 | 0 | 239,223 | 239,223 |
| 05.09 Channels and Canals | | | | | | | |
| 05.09.03 Channels | 1.00 | EA | 57,240 | 227,804 | 0 | 102,000 | 387,044 |
| TOTAL Channels and Canals | 1.00 | EA | 57,240 | 227,804 | 0 | 102,000 | 387,044 |
| 05.15 Flood Control and Diversion Strs | | | | | | | |
| 05.15.01 Indian Bayou Ditch @ Mi 58.3 | 1.00 | EA | 5,891 | 12,371 | 59,330 | 15,000 | 92,591 |
| TOTAL Flood Control and Diversion Strs | 1.00 | EA | 5,891 | 12,371 | 59,330 | 15,000 | 92,591 |
| 05.30 Planning, Engineering and Design | | | | | | | |
| 05.30.04 Construction Contract P, E, & D | 1.00 | EA | 657,258 | 0 | 0 | 38,720 | 695,978 |
| 05.30.05 Programs and Project Management | 1.00 | EA | 82,577 | 0 | 0 | 0 | 82,577 |
| TOTAL Planning, Engineering and Design | 1.00 | EA | 739,835 | 0 | 0 | 38,720 | 778,555 |
| 05.31 Construction Management | | | | | | | |
| 05.31.02 Area Office S & A | 1.00 | EA | 50,000 | 0 | 0 | 0 | 50,000 |
| 05.31.03 Districe Office S & A | 1.00 | EA | 25,800 | 0 | 0 | 0 | 25,800 |
| TOTAL Construction Management | 1.00 | EA | 75,800 | 0 | 0 | 0 | 75,800 |
| TOTAL Item No 5, Indian Bayou Ditch | 1.00 | EA | 878,766 | 240,175 | 59,330 | 394,943 | 1,573,213 |
| 06 Item No. 6, Indian Bayou Channel | | | | | | | |
| 06.01 Lands and Damages | | | | | | | |
| 06.01.02 Acquisitions | | | 0 | 0 | 0 | 369,215 | 369,215 |
| 06.01.05 Appraisals | | | 0 | 0 | 0 | 94,325 | 94,325 |
| 06.01.06 PL 91-646 Assistance | | | 0 | 0 | 0 | 15,400 | 15,400 |
| 06.01.07 Temporary Permits/Rights of Enty | | | 0 | 0 | 0 | 11,550 | 11,550 |
| 06.01.13 Project Related Administration | 1.00 | EA | 0 | 0 | 0 | 9,240 | 9,240 |
| 06.01.18 Real Estate Payments | | | 0 | 0 | 0 | 118,008 | 118,008 |
| TOTAL Lands and Damages | 1.00 | EA | 0 | 0 | 0 | 617,738 | 617,738 |

** PROJECT DIRECT SUMMARY - Sub-Feat **

| | QUANTY | UOM | LABOR | EQUIPMNT | MATERIAL | OTHER | TOTAL COST |
|---|---|---|---|---|---|---|---|
| 06.09 Channels and Canals | | | | | | | |
| 06.09.01 Channels | 1.00 | EA | 7,314 | 29,108 | 0 | 566,000 | 602,422 |
| TOTAL Channels and Canals | 1.00 | EA | 7,314 | 29,108 | 0 | 566,000 | 602,422 |
| 06.15 Flood Control and Diversion Strs | | | | | | | |
| 06.15.03 Indian Bayou @ Mi 16.4 | 1.00 | EA | 7,855 | 16,731 | 77,790 | 15,000 | 117,376 |
| TOTAL Flood Control and Diversion Strs | 1.00 | EA | 7,855 | 16,731 | 77,790 | 15,000 | 117,376 |
| 06.30 Planning, Engineering and Design | | | | | | | |
| 06.30.04 Construction Contract P, E, & D | 1.00 | EA | 665,988 | 0 | 0 | 54,640 | 720,628 |
| 06.30.05 Programs and Project Management | 1.00 | EA | 82,577 | 0 | 0 | 0 | 82,577 |
| TOTAL Planning, Engineering and Design | 1.00 | EA | 748,565 | 0 | 0 | 54,640 | 803,205 |
| 06.31 Construction Management | | | | | | | |
| 06.31.02 Area Office S & A | 1.00 | EA | 80,000 | 0 | 0 | 0 | 80,000 |
| 06.31.03 Districe Office S & A | | | 38,000 | 0 | 0 | 0 | 38,000 |
| TOTAL Construction Management | 1.00 | EA | 118,000 | 0 | 0 | 0 | 118,000 |
| TOTAL Item No. 6, Indian Bayou Channel | 1.00 | EA | 881,734 | 45,839 | 77,790 | 1,253,378 | 2,258,741 |
| 07 Item No. 7, Salt Bayou Channel | | | | | | | |
| 07.01 Lands and Damages | | | | | | | |
| 07.01.02 Acquisitions | | | 0 | 0 | 0 | 33,565 | 33,565 |
| 07.01.05 Appraisals | | | 0 | 0 | 0 | 8,575 | 8,575 |
| 07.01.06 PL 91-646 Assistance | | | 0 | 0 | 0 | 1,400 | 1,400 |
| 07.01.07 Temporary Permits/Rights of Enty | | | 0 | 0 | 0 | 1,050 | 1,050 |
| 07.01.13 Project Related Administration | 1.00 | EA | 0 | 0 | 0 | 840 | 840 |
| 07.01.18 Real Estate Payments | | | 0 | 0 | 0 | 84,000 | 84,000 |
| TOTAL Lands and Damages | 1.00 | EA | 0 | 0 | 0 | 129,430 | 129,430 |
| 07.09 Channels and Canals | | | | | | | |
| 07.09.01 Channels | 1.00 | EA | 3,180 | 12,656 | 0 | 401,900 | 417,736 |
| TOTAL Channels and Canals | 1.00 | EA | 3,180 | 12,656 | 0 | 401,900 | 417,736 |

| | QUANTY | UOM | LABOR | EQUIPMNT | MATERIAL | OTHER | TOTAL COST |
|---|---|---|---|---|---|---|---|
| 07.30 Planning, Engineering and Design | | | | | | | |
| 07.30.04 Construction Contract P, E, & D | 1.00 | EA | 433,860 | 0 | 0 | 0 | 433,860 |
| 07.30.05 Programs and Project Management | 1.00 | EA | 82,577 | 0 | 0 | 0 | 82,577 |
| TOTAL Planning, Engineering and Design | 1.00 | EA | 516,437 | 0 | 0 | 0 | 516,437 |
| 07.31 Construction Management | | | | | | | |
| 07 31.02 Area Office S & A | 1.00 | EA | 80,000 | 0 | 0 | 0 | 80,000 |
| 07.31.03 Districe Office S & A | 1.00 | EA | 36,000 | 0 | 0 | 0 | 36,000 |
| TOTAL Construction Management | 1.00 | EA | 116,000 | 0 | 0 | 0 | 116,000 |
| TOTAL Item No. 7, Salt Bayou Channel | 1.00 | EA | 635,617 | 12,656 | 0 | 531,330 | 1,179,603 |
| 08 Item No. 8, Crooked Creek | | | | | | | |
| 08.01 Lands and Damages | | | | | | | |
| 08.01.02 Acquisitions | | | 0 | 0 | 0 | 234,955 | 234,955 |
| 08.01.05 Appraisals | | | 0 | 0 | 0 | 60,025 | 60,025 |
| 08.01.06 PL 91-646 Assistance | | | 0 | 0 | 0 | 9,800 | 9,800 |
| 08.01.07 Temporary Permits/Rights of Enty | | | 0 | 0 | 0 | 7,350 | 7,350 |
| 08.01.13 Project Related Administration | 1.00 | EA | 0 | 0 | 0 | 5,880 | 5,880 |
| 08.01.18 Real Estate Payments | | | 0 | 0 | 0 | 94,642 | 94,642 |
| TOTAL Lands and Damages | 1.00 | EA | 0 | 0 | 0 | 412,652 | 412,652 |
| 08.09 Channels and Canals | | | | | | | |
| 08.09 01 Channels | 1.00 | EA | 234,048 | 931,467 | 0 | 234,000 | 1,399,515 |
| TOTAL Channels and Canals | 1.00 | EA | 234,048 | 931,467 | 0 | 234,000 | 1,399,515 |
| 08.15 Flood Control and Diversion Strs | | | | | | | |
| 08.15.01 Wier @ Mi. 4.3 | 1.00 | EA | 0 | 0 | 0 | 10,000 | 10,000 |
| 08.15.02 Wier @ Mi. 13.3 | 1.00 | EA | 0 | 0 | 0 | 10,000 | 10,000 |
| TOTAL Flood Control and Diversion Strs | 1.00 | EA | 0 | 0 | 0 | 20,000 | 20,000 |
| 08 30 Planning, Engineering and Design | | | | | | | |
| 08 30.04 Construction Contract P, E, & D | 1.00 | EA | 973,903 | 0 | 0 | 35,440 | 1,009,343 |

| | QUANTY | UOM | LABOR | EQUIPMNT | MATERIAL | OTHER | TOTAL COST |
|---|---|---|---|---|---|---|---|
| 08.30.05 Programs and Project Management | 1.00 | EA | 82,577 | 0 | 0 | 0 | 82,577 |
| TOTAL Planning, Engineering and Design | 1.00 | EA | 1,056,480 | 0 | 0 | 35,440 | 1,091,920 |
| 08.31 Construction Management | | | | | | | |
| 08.31.02 Area Office S & A | 1.00 | EA | 150,000 | 0 | 0 | 0 | 150,000 |
| 08.31.03 District Office S & A | | | 71,500 | 0 | 0 | 0 | 71,500 |
| TOTAL Construction Management | 1.00 | EA | 221,500 | 0 | 0 | 0 | 221,500 |
| TOTAL Item No. 8, Crooked Creek | 1.00 | EA | 1,512,028 | 931,467 | 0 | 702,092 | 3,145,587 |
| 09 Item No. 9, Big Bayou Meto Div. | | | | | | | |
| 09.01 Lands and Damages | | | | | | | |
| 09.01.01 Project Planning | 1.00 | EA | 0 | 0 | 0 | 3,800 | 3,800 |
| 09.01.02 Acquisitions | | | 0 | 0 | 0 | 67,130 | 67,130 |
| 09.01.05 Appraisals | | | 0 | 0 | 0 | 17,150 | 17,150 |
| 09.01.06 PL 91 646 Assistance | | | 0 | 0 | 0 | 2,800 | 2,800 |
| 09.01.07 Temporary Permits/Rights of Enty | | | 0 | 0 | 0 | 2,100 | 2,100 |
| 09.01.13 Project Related Administration | 1.00 | EA | 0 | 0 | 0 | 1,680 | 1,680 |
| 09.01.18 Real Estate Payments | | | 0 | 0 | 0 | 64,183 | 64,183 |
| TOTAL Lands and Damages | 1.00 | EA | 0 | 0 | 0 | 158,843 | 158,843 |
| 09.02 Relocations | | | | | | | |
| 09.02.01 Roads, Construction Activities | | | 0 | 0 | 0 | 519,000 | 519,000 |
| 09.02.03 Cemetery, Utilities, & Structure | | | 0 | 0 | 0 | 115,000 | 115,000 |
| TOTAL Relocations | 1.00 | EA | 0 | 0 | 0 | 634,000 | 634,000 |
| 09.09 Channels and Canals | | | | | | | |
| 09.09.01 Channels | 1.00 | EA | 244,860 | 974,497 | 0 | 210,000 | 1,429,357 |
| TOTAL Channels and Canals | 1.00 | EA | 244,860 | 974,497 | 0 | 210,000 | 1,429,357 |
| 09.11 Levees and Floodwalls | | | | | | | |
| 09.11.01 Levees | | | 58,193 | 191,020 | 0 | 70,000 | 319,214 |
| TOTAL Levees and Floodwalls | 1.00 | EA | 58,193 | 191,020 | 0 | 70,000 | 319,214 |

** PROJECT DIRECT SUMMARY - Sub-Feat **

| | QUANTY | UOM | LABOR | EQUIPMNT | MATERIAL | OTHER | TOTAL COST |
|---|---|---|---|---|---|---|---|
| 09.15 Flood Control and Diversion Strs | | | | | | | |
| 09.15.01 B.B M. Diversion Wier Mi 0.0 | 1.00 | EA | 3,069 | 6,302 | 33,413 | 0 | 42,783 |
| 09.15.02 B.B.M. Diversion Mi 2.5 Low Wier | 1.00 | EA | 3,069 | 6,302 | 33,413 | 0 | 42,783 |
| TOTAL Flood Control and Diversion Strs | 1 00 | EA | 6,137 | 12,604 | 66,825 | 0 | 85,567 |
| 09.30 Planning, Engineering and Design | | | | | | | |
| 09 30 04 Construction Contract P, E, & D | 1.00 | EA | 1,152,171 | 0 | 0 | 5,840 | 1,158,011 |
| 09.30 05 Programs and Project Management | 1.00 | EA | 82,577 | 0 | 0 | 0 | 82,577 |
| TOTAL Planning, Engineering and Design | 1.00 | EA | 1,234,748 | 0 | 0 | 5,840 | 1,240,588 |
| 09.31 Construction Management | | | | | | | |
| 09.31.02 Area Office S & A | 1.00 | EA | 200,000 | 0 | 0 | 0 | 200,000 |
| 09.31.03 Districe Office S & A | | | 95,500 | 0 | 0 | 0 | 95,500 |
| TOTAL Construction Management | 1.00 | EA | 295,500 | 0 | 0 | 0 | 295,500 |
| TOTAL Item No. 9, Big Bayou Meto Div. | 1.00 | EA | 1,839,439 | 1,178,121 | 66,825 | 1,078,683 | 4,163,068 |
| 10 Item No. 10, Mitigation | | | | | | | |
| 10.01 Lands and Damages | | | | | | | |
| 10.01 02 Acquisitions | 1.00 | EA | 0 | 0 | 0 | 47,950 | 47,950 |
| 10.01.05 Appraisal | 1.00 | EA | 0 | 0 | 0 | 12,250 | 12,250 |
| 10.01.06 PL 91-646 Assistance | 1.00 | EA | 0 | 0 | 0 | 2,000 | 2,000 |
| 10.01.07 Temp Permits/Licenses/Rights | 1.00 | EA | 0 | 0 | 0 | 1,500 | 1,500 |
| 10.01.13 Project Related Admin | 1.00 | EA | 0 | 0 | 0 | 1,200 | 1,200 |
| 10.01.18 Real Estate Payments | | | 0 | 0 | 0 | 2,633,550 | 2,633,550 |
| TOTAL Lands and Damages | 1.00 | EA | 0 | 0 | 0 | 2,698,450 | 2,698,450 |
| 10 06 Fish and Wildlife Facilities | | | | | | | |
| 10.06.03 Wildlife Facilities | 1.00 | EA | 0 | 0 | 0 | 415,350 | 415,350 |
| TOTAL Fish and Wildlife Facilities | 1.00 | EA | 0 | 0 | 0 | 415,350 | 415,350 |
| 10 30 Planning, Engineering & Design | 1.00 | EA | 0 | 0 | 0 | 203,200 | 203,200 |
| 10.31 Construction Management | 1.00 | EA | 0 | 0 | 0 | 101,600 | 101,600 |
| TOTAL Item No. 10, Mitigation | 1.00 | EA | 0 | 0 | 0 | 3,418,600 | 3,418,600 |

** PROJECT DIRECT SUMMARY Sub-Feat. **

| | QUANTY UOM | LABOR | EQUIPMNT | MATERIAL | OTHER | TOTAL COST |
|---|---|---|---|---|---|---|
| TOTAL Bayou Meto Selected Plan | 1.00 EA | 15463690 | 6,546,795 | 6,196,946 | 14,560,566 | 42,767,998 |
| Prime Contractor's Field Overhead | | | | | | 3,338,336 |
| SUBTOTAL | | | | | | 46,106,334 |
| Prime's Home Office Expense | | | | | | 1,535,635 |
| SUBTOTAL | | | | | | 47,641,969 |
| Prime Contractor's PROFIT | | | | | | 2,712,955 |
| SUBTOTAL | | | | | | 50,354,924 |
| BOND | | | | | | 298,425 |
| TOTAL INCL INDIRECTS | | | | | | 50,653,349 |
| CONTINGENCIES | | | | | | 11,023,222 |
| SUBTOTAL | | | | | | 61,676,571 |
| ESCALATION | | | | | | 6,411,908 |
| TOTAL INCL OWNER COSTS | | | | | | 68,088,479 |

No errors detected...

* * * END OF ERROR REPORT * * *

SUMMARY REPORTS SUMMARY PAGE

PROJECT OWNER SUMMARY - Contract .....1
PROJECT OWNER SUMMARY - Feature.....2
PROJECT OWNER SUMMARY - Sub-Feat.....5
PROJECT INDIRECT SUMMARY - Contract.....15
PROJECT INDIRECT SUMMARY - Feature.....16
PROJECT INDIRECT SUMMARY Sub Feat.....19
PROJECT DIRECT SUMMARY - Contract.....29
PROJECT DIRECT SUMMARY - Feature.....30
PROJECT DIRECT SUMMARY - Sub-Feat.....33

No Detailed Estimate...

No Backup Reports...

* * * END TABLE OF CONTENTS * * *