Memphis District **Invitation for Bid No. DACW66-01-B-0021**

US Army Corps
of Engineers®

Project Title:
LOWER BUFFALO CREEK
CHANNEL CLEANOUT
ST. FRANCIS BASIN PROJECT - MAINTENANCE

Location:
MISSISSIPPI COUNTY, ARKANSAS

Construction Solicitation
and Specifications

THIS SOLICITATION IS AN UNRESTRICTED SOLICITATION

Date: August 2001

TABLE OF CONTENTS

SECTION	TITLE
00010	SOLICITATION, OFFER, AND AWARD (SF 1442), BIDDING SCHEDULE, PLANT AND EQUIPMENT SCHEDULE, NOTICE OF REQUIREMENT FOR AFFIRMATIVE ACTION, AND WAGE RATES
00100	INSTRUCTIONS, CONDITIONS AND NOTICES TO BIDDERS
00600	REPRESENTATIONS AND CERTIFICATIONS AND OTHER STATEMENTS OF BIDDERS
00700	CONTRACT CLAUSES
00800	SPECIAL CONTRACT REQUIREMENTS

TECHNICAL SPECIFICATIONS

DIVISION 1 - GENERAL REQUIREMENTS

01025	MEASUREMENT AND PAYMENT
01130	ENVIRONMENTAL PROTECTION
01451	CONTRACTOR QUALITY CONTROL
01452	PROJECT SIGNS

DIVISION 2 - SITE WORK

02210	CLEARING AND CHANNEL CLEANOUT
02542	STONE PROTECTION
02700	CULVERT REMOVAL AND INSTALLATION
02935	ESTABLISHMENT OF TURF

DIVISIONS 3 THRU 16 NOT USED

SOLICITATION, OFFER, AND AWARD (Construction, Alteration, or Repair)	1. SOLICITATION NO.	2. TYPE OF SOLICITATION	3. DATE ISSUED	PAGE OF PAGES
	DACW66-01-B-0021	☒ SEALED BID (IFB) ☐ NEGOTIATED (RFP)	08/28/01	

IMPORTANT - The "offer" section on the reverse must be fully completed by offeror.

4. CONTRACT NO.	5. REQUISITION/PURCHASE REQUEST NO.	6. PROJECT NO.
	W38XGR-1208-1486	DACW66-01-B-0021

7. ISSUED BY CODE W38XGR

U S ARMY ENGINEER DISTRICT, MEMPHIS
CONTRACTING DIVISION (CEMVM-CT)
167 NORTH MAIN STRET B202
MEMPHIS, TN 38103-1894

8. ADDRESS OFFER TO

ADDRESS SAME AS BLOCK 7.
HAND DELIVERED BIDS RECEIVED IN ROOM 681, CLIFFORD DAVIS FEDERAL BUILDING, 167 NORTH MAIN STREET, MEMPHIS, TN

9. FOR INFORMATION CALL: ▶	A. NAME	B. TELEPHONE NO. (Include area code) (NO COLLECT CALLS)
	SEE BIDDING SCHEDULE	

SOLICITATION

NOTE: In sealed bid solicitations "offer" and "offeror" mean "bid" and "bidder".

10. THE GOVERNMENT REQUIRES PERFORMANCE OF THE WORK DESCRIBED IN THESE DOCUMENTS (Title, identifying no., date):

The work is for Lower Buffalo Creek Channel Cleanout, Mississippi County, Arkansas.

DESCRIPTION OF WORK: The work consists of clearing and disposal of debris therefrom; channel cleanout and disposal of channel cleanout material; rough dressing, fertilizing and seeding, placement of filter material and riprap; removal and installation of culverts; and environmental protection.

THIS SOLICITATION IS AN UNRESTRICTED SOLICITATION. The estimated value of the proposed work is between $100,000.00 and $250,000.00. The supplies or services to be procured under this solicitation are classified under NAICS Code 234990.

General Decision No. AR010044 is located behind Section 00010.

11. The Contractor shall begin performance within 10 calendar days and complete it within 90 calendar days after receiving ☐ award, ☒ notice to proceed. This performance period is ☒ mandatory, ☐ negotiable. (See *Sec. 00800, Para. 1.1 .)

12A. THE CONTRACTOR MUST FURNISH ANY REQUIRED PERFORMANCE AND PAYMENT BONDS? (If "YES," indicate within how many calendar days after award in Item 12B.)	12B. CALENDAR DAYS
☒ YES ☐ NO	10

13. ADDITIONAL SOLICITATION REQUIREMENTS:

A. Sealed offers in original and 0 copies to perform the work required are due at the place specified in Item 8 by 1430 (hour) local time 09/27/01 (date). If this is a sealed bid solicitation, offers must be publicly opened at that time. Sealed envelopes containing offers shall be marked to show the offeror's name and address, the solicitation number, and the date and time offers are due.

B. An offer guarantee ☒ is, ☐ is not required.

C. All offers are subject to the (1) work requirements, and (2) other provisions and clauses incorporated in the solicitation in full text or by reference.

D. Offers providing less than 60 calendar days for Government acceptance after the date offers are due will not be considered and will be rejected.

14. NAME AND ADDRESS OF OFFEROR (Include ZIP Code)	15. TELEPHONE NO. (Include area code)
CEC #: DUNS #:	16. REMITTANCE ADDRESS (Include only if different than Item 14)
CODE FACILITY CODE	

17. The offeror agrees to perform the work required at the prices specified below in strict accordance with the terms of this solicitation, if this offer is accepted by the Government in writing within ____ calendar days after the date offers are due. (Insert any number equal to or greater than the minimum requirement stated in Item 13D. Failure to insert any number means the offeror accepts the minimum in Item 13D.)

AMOUNTS ▶

18. The offeror agrees to furnish any required performance and payment bonds.

19. ACKNOWLEDGMENT OF AMENDMENTS

(The offeror acknowledges receipt of amendments to the solicitation - give number and date of each)

AMENDMENT NO.										
DATE										

20A. NAME AND TITLE OF PERSON AUTHORIZED TO SIGN OFFER (Type or print)	20B. SIGNATURE	20C. OFFER DATE

AWARD (To be completed by Government)

21. ITEMS ACCEPTED:

22. AMOUNT	23. ACCOUNTING AND APPROPRIATION DATA

24. SUBMIT INVOICES TO ADDRESS SHOWN IN (4 copies unless otherwise specified) ▶	ITEM	25. OTHER THAN FULL AND OPEN COMPETITION PURSUANT TO ☐ 10 U.S.C. 2304(c) ( ) ☐ 41 U.S.C. 253(c) ( )
26. ADMINISTERED BY CODE		27. PAYMENT WILL BE MADE BY

CONTRACTING OFFICER WILL COMPLETE ITEM 28 OR 29 AS APPLICABLE

☐ 28. NEGOTIATED AGREEMENT (contractor is required to sign this document and return _____ copies to issuing office.) Contractor agrees to furnish and deliver all items or perform all work, requisitions identified on this form and any continuation sheets for the consideration stated in this contract. The rights and obligations of the parties to this contract shall be governed by (a) this contract award, (b) the solicitation, and (c) the clauses, representations, certifications, and specifications incorporated by reference in or attached to this contract.

☐ 29. AWARD (Contractor is not required to sign this document.) Your offer on this solicitation, is hereby accepted as to the items listed. This award consummates the contract, which consists of (a) the Government solicitation and your offer, and (b) this contract award. No further contractual document is necessary.

30A. NAME AND TITLE OF CONTRACTOR OR PERSON AUTHORIZED TO SIGN (Type or print)		31A. NAME OF CONTRACTING OFFICER (Type or print)	
30B. SIGNATURE	30C. DATE	31B. UNITED STATES OF AMERICA BY	31C. AWARD DATE

LOWER BUFFALO CREEK
CHANNEL CLEANOUT
MISSISSIPPI COUNTY, ARKANSAS
ST. FRANCIS BASIN PROJECT – MAINTENANCE

SECTION B
SUPPLIES OR SERVICES AND PRICES/COSTS

ITEM	DESCRIPTION	QUANTITY	U/M	U/P	AMOUNT
0001	Mobilization and Demobilization	1	LS	XXX.XX	_____.__
0002	Clearing and Channel Cleanout	1	LS	XXX.XX	_____.__
0003	Rough Dressing, Fertilizing, and Seeding	1	LS	XXX.XX	_____.__
0004	Riprap "R90"	480	TN	$____.__	_____.__
0005	Filter Material	210	TN	$____.__	_____.__
0006	Corrugated Metal Pipe, 30-inch	48	LF	$____.__	_____.__
0007	Flared End Section, 30-inch	2	EA	$____.__	_____.__
0008	Environmental Protection	1	LS	XXX.XX	_____.__
	TOTAL ITEMS 0001 THRU 0008				_____.__

NOTE: Bidders shall furnish unit prices for all items listed on the schedule of bid items which require unit prices. If the bidder fails to insert a unit price in the appropriate blank for required items, but does furnish an extended total or an estimated amount for such item, the Government will deem his unit price to be the quotient obtained by dividing the extended estimated amount for that line item by the quantity. IF THE BIDDER OMITS BOTH THE UNIT PRICE AND THE EXTENDED AMOUNT FOR ANY

ITEM, HIS BID WILL BE DECLARED NONRESPONSIVE.

Award will be made as a whole to one bidder.

All quantities are estimated except where unit is given as "LS".

If a bid or modification to a bid based on unit prices is submitted and provides for a lump sum adjustment to the total estimated cost, the application of the lump sum adjustment to each unit price, including lump sum units, in bid schedule must be stated, or if it is not stated, the bidder agrees that the lump sum adjustment shall be applied on a pro rata basis to every price in the bid schedule.

Bidders are cautioned to read Contract Clause entitled "Required Central Contractor Registration" (252.204-7004) located in Section 00700.

TECHNICAL POC: JERRY WELCH 901/544-3236
Jerry.R.Welch@mvm01.usace.army.mil

ADMINISTRATIVE POC: CAROL SEIBERT 901-544-3353
Carol.j.seibert@mvm02.usace.army.mil

PLANT AND EQUIPMENT SCHEDULE

[TO BE ATTACHED TO BID FORM]

AVAILABLE PLANT TO BE USED

*_____

No.	TYPE	CAPACITY	MANUFACTURER	AGE & CONDTION	LOCATION
			*_____		
			*_____		

*PROVIDE SEPARATE TABLE FOR EACH TYPE OF EQUIPMENT SUCH AS CONCRETE PLANT, MATERIAL HANDLING, HAULING, ETC. USE ADDITIONAL PAGE IF NECESSARY.

ENG FORM 1619-R

NOTICE OF REQUIREMENT FOR AFFIRMATIVE ACTION TO ENSURE EQUAL EMPLOYMENT OPPORTUNITY FOR CONSTRUCTION. (FEB 1999)

a. The offeror's attention is called to the Equal Opportunity Clause and the Affirmative Action Compliance Requirements for Construction clause of this solicitation.

b. The goals for minority and female participation, expressed in percentage terms for the Contractor's aggregate workforce in each trade on all construction work in the covered area, are as follows:

Goals for minority participation for each trade		:	Goals for female participation for each trade
SMSA Counties	32.3	:	
Non-SMSA Counties	26.5	:	6.9

These goals are applicable to all the Contractor's construction work performed in the covered area. If the Contractor performs construction work in a geographical area located outside of the covered area, the Contractor shall apply the goals established for the geographical area where the work is actually performed. Goals are published periodically in the Federal Register in notice form, and these notices may be obtained from any Office of Federal Contract Compliance Programs office.

c. The Contractor's compliance with Executive Order 11246, as amended, and the regulations in 41 CFR 60-4 shall be based on (1) its implementation of the Equal Opportunity clause, (2) specific affirmative action obligations required by the clause entitled "Affirmative Action Compliance Requirements for Construction," and (3) its efforts to meet the goals. The hours of minority and female employment and training must be substantially uniform throughout the length of the contract, and in each trade. The Contractor shall make a good faith effort to employ minorities and women evenly on each of its projects. The transfer of minority or female employees or trainees from Contractor to Contractor, or from project to project, for the sole purpose of meeting the Contractor's goals shall be a violation of the contract, Executive Order 11246, as amended, and the regulations in 41 CFR 60-4. Compliance with the goals will be measured against the total work hours performed.

d. The Contractor shall provide written notification to the Deputy Assistant Secretary for Federal Contract Compliance, U.S. Department of Labor, within 10 working days following award of any construction subcontract in excess of $10,000 at any tier for construction work under the contract resulting from this solicitation. The notification shall list the -

(1) Name, address and telephone number of the subcontractor;

(i) Employer identification number of the subcontractor:

(2) Estimated dollar amount of the subcontract;

(3) Estimated starting and completion dates of the subcontract; and

(4) Geographical area in which the subcontract is to be performed.

e. As used in this Notice, and in the contract resulting from this Solicitation, the "covered area" is Economic Area 055, Memphis, TN, as follows:

SMSA Counties:

4920 Memphis, TN-AR-MS----------32.3
AR Crittenden; MS DeSoto, TN Shelby, TN Tipton

Non-SMSA Counties.....26.5

AR Clay; AR Craighead; AR Cross, AR Greene; AR Lawrence; AR Lee,
AR Mississippi; AR Phillips, AR Poinsett; AR Randolph; AR St. Francis;
MS Alcorn; MS Benton; MS Bolivar; MS Clahoun; MS Carroll;
MS Chickasaw; MS Clay; MS Coahoma; MS Grenada; MS Itawamba;
MS Lafayette; MS Lee; MS Leflore; MS Marshall; MS Monroe;
MS Montgomery; MS Panola; MS Pontotoc; MS Prentiss; MS Quitman;
MS Sunflower; MS Tallahatchie; MS Tate; MS Tippah; MS Tishomingo;
MS Union; MS Washington; MS Webster; MS Yalobusha; MO Dunklin;
MO New Madrid; MO Pemiscot, TN Benton; TN Carroll, TN Chester;
TN Crockett; TN Decator; TN Dyer; TN Fayette, TN Gibson; TN Hardeman
TN Hardin; TN Haywood; TN Henderson; TN Henry; TN Lake;
TN Lauderdale; TN McNairy; TN Madison; TN Obion;
TN Weakley.

(FAR 52.222-23)

General Decision Number AR010044

General Decision Number AR010044 Superseded General Decision No. AR000044
State: Arkansas
Construction Type:
HEAVY
SEWER AND WATER LINE
County(ies):

ARKANSAS	GARLAND	OUACHITA
ASHLEY	GRANT	PERRY
BAXTER	GREENE	PHILLIPS
BENTON	HEMPSTEAD	PIKE
BOONE	HOT SPRING	POINSETT
BRADLEY	HOWARD	POLK
CALHOUN	INDEPENDENCE	POPE
CARROLL	IZARD	PRAIRIE
CHICOT	JACKSON	RANDOLPH
CLARK	JOHNSON	SCOTT
CLAY	LAFAYETTE	SEARCY
CLEBURNE	LAWRENCE	SEBASTIAN
CLEVELAND	LEE	SEVIER
COLUMBIA	LINCOLN	SHARP
CONWAY	LITTLE RIVER	ST FRANCIS
CRAIGHEAD	LOGAN	STONE
CRAWFORD	MADISON	UNION
CRITTENDEN	MARION	VAN BUREN
CROSS	MILLER	WASHINGTON
DALLAS	MISSISSIPPI	WHITE
DESHA	MONROE	WOODRUFF
DREW	MONTGOMERY	YELL
FRANKLIN	NEVADA	
FULTON	NEWTON	

HEAVY CONSTRUCTION PROJECTS (Includes Sewer and Water Line Construction Projects)

Modification Number	Publication Date
0	03/02/2001

COUNTY(ies):

ARKANSAS	GARLAND	OUACHITA
ASHLEY	GRANT	PERRY
BAXTER	GREENE	PHILLIPS
BENTON	HEMPSTEAD	PIKE
BOONE	HOT SPRING	POINSETT
BRADLEY	HOWARD	POLK
CALHOUN	INDEPENDENCE	POPE
CARROLL	IZARD	PRAIRIE
CHICOT	JACKSON	RANDOLPH
CLARK	JOHNSON	SCOTT
CLAY	LAFAYETTE	SEARCY
CLEBURNE	LAWRENCE	SEBASTIAN
CLEVELAND	LEE	SEVIER
COLUMBIA	LINCOLN	SHARP
CONWAY	LITTLE RIVER	ST FRANCIS
CRAIGHEAD	LOGAN	STONE
CRAWFORD	MADISON	UNION
CRITTENDEN	MARION	VAN BUREN

CROSS	MILLER	WASHINGTON
DALLAS	MISSISSIPPI	WHITE
DESHA	MONROE	WOODRUFF
DREW	MONTGOMERY	YELL
FRANKLIN	NEVADA	
FULTON	NEWTON	

SUAR2001B 01/19/1990

	Rates	Fringes
BRICKLAYERS	7.20	
CARPENTERS	7.20	
CONCRETE FINISHERS	7.20	
ELECTRICIANS	8.75	
IRONWORKERS:		
Structural	6.30	
Reinforcing	5.45	
LABORERS:		
Air tool operators	5.15	
Asphalt heater operators	5.15	
Asphalt rakers	5.85	
Chain saw oeprators	5.15	
Checker graders	5.45	
Concrete joint sealers	5.15	
Concrete saw operators	5.15	
Formsetters	5.45	
Laborers	5.15	
Pipelayers	5.45	
Powdermen	6.40	
Vibratormen	5.15	
PAINTERS	6.20	
PILE DRIVER LEADMEN	6.20	
POWER EQUIPMENT OPERATORS:		
Aggregate Spreader operators	5.80	
Asphalt plant firemen	5.15	
Asphalt plantdriver operators	5.15	
Batch plant operators	5.80	
Bulldozer Operators:		
Finish	6.90	
Rough	5.65	
Bull Float operators	5.65	
Concrete curing machine operators	5.65	
Concrete mixer operators:		
Less than 5 sacks	5.15	
5 sacks and over	6.20	
Backhoe Operator - Rubber tired		
(1 yard or less)	6.10	
Cherry picker operators	6.10	
Concrete paver operators	6.70	
Concrete sperader operators	6.70	
Crane, Derrick, Dragline,		
Shovel, Backhoe, Operators		
1-1/2 yards or less	6.70	
over 1-1/2 yards	7.20	
Crusher operators	5.65	
Distributor operators	5.65	
Drill operators (Wagon or		
truck)	5.65	
Elevating Grader operators	6.70	

Euclid or like equipment operator (Bottom or end dump)	5.25
Finishing Machine Operators	6.10
Flaggers	5.15
Forkliff operators	5.15
Form grader operators	5.15
Front end loader operators	
Finish	6.70
Rough	5.65
Hdro Seeder operators	5.15
Mechanics	6.90
Motor Patrol Operators:	
Finish	6.90
Rough	5.65
Mulching machine operators	5.15
Oilers and Greasers	5.45
Piledriver operators	6.20
Power broom operators	5.15
Pug mill operators	5.15
Roller Operators (self propelled)	5.25
Scraper Operators:	
Finish	6.90
Rough	5.65
Sod slicing machine operators	5.15
Stabilizer mixing machine operators	5.65
Tractor operators (crawler type)	5.15
Tractor operators (farm and sheel)	5.15
Tractor operators-wheel type (with attach.-1 yd. or under)	5.55
Trenching Machine operators	5.55
STONEMASONS	7.20
TRUCK DRIVERS:	
Distributor truck drivers	5.45
Semi-trailer	5.45
Lowboy drivers	5.65
Transit mix truck drivers	5.45
Truck Drivers (heavy-maximum pay load in excess of 3,000 lbs.)	5.15
Truck Drivers (light-maximum pay load 3,000 lbs.)	5.15
WELL DRILLERS	6.90

WELDERS - Receive rate prescribed for craft performing operation to which welding is incidental.

==========

Unlisted classifications needed for work not included within the scope of the classifications listed may be added after award only as provided in the labor standards contract clauses (29 CFR 5.5(a)(1)(v)).

In the listing above, the "SU" designation means that rates listed under that identifier do not reflect collectively bargained wage and fringe benefit rates.

Other designations indicate unions whose rates have been determined to be prevailing.

WAGE DETERMINATION APPEALS PROCESS

1.) Has there been an initial decision in the matter? This can be:

* an existing published wage determination
* a survey underlying a wage determination
* a Wage and Hour Division letter setting forth a position on a wage determination matter
* a conformance (additional classification and rate) ruling

On survey related matters, initial contact, including requests for summaries of surveys, should be with the Wage and Hour Regional Office for the area in which the survey was conducted because those Regional Offices have responsibility for the Davis-Bacon survey program. If the response from this initial contact is not satisfactory, then the process described in 2.) and 3.)should be followed.

With regard to any other matter not yet ripe for the formal process described here, initial contact should be with the Branch of Construction Wage Determinations. Write to:

Branch of Construction Wage Determinations
Wage and Hour Division
U. S. Department of Labor
200 Constitution Avenue, N. W.
Washington, D. C. 20210

2.) If the answer to the question in 1.) is yes, then an interested party (those affected by the action) can request review and reconsideration from the Wage and Hour Administrator (See 29 CFR Part 1.8 and 29 CFR Part 7). Write to:

Wage and Hour Administrator
U.S. Department of Labor
200 Constitution Avenue, N. W.
Washington, D. C. 20210

The request should be accompanied by a full statement of the interested party’s position and by any information (wage payment data, project description, area practice material, etc.) that the requestor considers relevant to the issue.

3.) If the decision of the Administrator is not favorable, an interested party may appeal directly to the Administrative Review Board (formerly the Wage Appeals Board). Write to:

Administrative Review Board
U. S. Department of Labor
200 Constitution Avenue, N. W.
Washington, D. C. 20210

4.) All decisions by the Administrative Review Board are final.

END OF GENERAL DECISION

SECTION 00100
INSTRUCTIONS TO BIDDERS
TABLE OF CONTENTS

52.0-4019 PREAWARD INFORMATION 1

52.0-4047 SITE OF THE WORK 1

52.0-4048 QUANTITY ESTIMATES 2

52.0-4049 CONDITIONS AFFECTING THE WORK 2

52.0-4055 NEGOTIATIONS AFTER SEALED BIDDING 2

52.0-4058 PROGRAM DATA 3

52.0-4060 REVISION AND AMENDMENT TO SOLICITATION FOR BIDS 3

52.0-4078 (FAR 52.236-27) SITE VISIT (CONSTRUCTION) (ALTERNATE I) (FEB 1995) 3

52.204-6 DATA UNIVERSAL NUMBERING SYSTEM (DUNS) NUMBER (JUN 99) 4

52.211-2 AVAILABILITY OF SPECIFICATIONS LISTED IN THE DOD INDEX OF SPECIFICATIONS AND STANDARDS (DODISS) AND DESCRIPTIONS LISTED IN THE ACQUISITION MANAGEMENT SYSTEMS AND DATA REQUIREMENTS CONTROL LIST, DOD 5010.12-L (DEC 1999) 5

52.214-1 SOLICITATION DEFINITIONS--SEALED BIDDING (JUL 1987) 5

52.214-3 AMENDMENTS TO INVITATIONS FOR BIDS (DEC 1989) 5

52.214-4 FALSE STATEMENTS IN BIDS (APR 1984) 6

52.214-5 SUBMISSION OF BIDS (MAR 1997) 6

52.214-6 EXPLANATION TO PROSPECTIVE BIDDERS (APR 1984) 6

52.214-7 LATE SUBMISSIONS, MODIFICATIONS, AND WITHDRAWALS OF BIDS (NOV 1999) 7

52.214-18 PREPARATION OF BIDS--CONSTRUCTION (APR 1984) 8

52.214-19 CONTRACT AWARD--SEALED BIDDING--CONSTRUCTION (AUG 1996) 8

52.214-34 SUBMISSION OF OFFERS IN THE ENGLISH LANGUAGE (APR 1991) 9

52.214-35 SUBMISSION OF OFFERS IN U.S. CURRENCY (APR 1991) 9

52.214-5000 APPARENT CLERICAL MISTAKES (MAR 1995)--EFARS 9

52.216-1 TYPE OF CONTRACT (APR 1984) 10

52.225-12 NOTICE OF BUY AMERICAN ACT REQUIREMENT-- CONSTRUCTION MATERIALS UNDER TRADE AGREEMENTS (FEB 2000) 10

52.232-38 SUBMISSION OF ELECTRONIC FUNDS TRANSFER INFORMATION WITH OFFER (MAY 1999) 11

52.233-2 SERVICE OF PROTEST (AUG 1996) 12

52.252-1 SOLICITATION PROVISIONS INCORPORATED BY REFERENCE (FEB 1998) 12

252.204-7001 COMMERCIAL AND GOVERNMENT ENTITY (CAGE) CODE REPORTING (AUG 1999) 13

SECTION 00100
INSTRUCTIONS TO BIDDERS

CLAUSES INCORPORATED BY FULL TEXT

52.0-4019 PREAWARD INFORMATION

Each bidder shall, upon request of the Contracting Officer, furnish a statement of whether he is now or ever has been engaged in any work similar to that covered by the specifications herein, the dollar value thereof, the year in which such work was performed, and the manner of its execution and giving such other information as will tend to show the bidder's ability to prosecute the required work. The "such other information" referred to above shall include but is not limited to the following:

(a) The name and address of the office or firm under which such similar work was performed.

(b) A list of key personnel available for the instant project and their qualifications.

(c) A copy of bidder's latest financial statement, including the names of banks or other financial institutions with which the bidder conducts business. If the financial statement is more than 60 days old, a certificate should be attached stating that financial condition is substantially the same, or if not the same, the changes that have taken place. Such statement will be treated as confidential.

(d) A list of present commitments, including the dollar value thereof, and name of office under which work is being performed.

52.0-4047 SITE OF THE WORK

Bidders are advised that for the purpose of applicability of the Davis-Bacon Act and other contract labor standards provisions, "the site of the work" under the contract to be awarded pursuant to the solicitation may not be limited to the physical place(s) where the construction called for in the contract will remain when work on it has been completed. The "site of the work" may include other adjacent or nearby property used by the contractor or subcontractors during such construction. For example, fabrication plants, mobile factories, batch plants, borrow pits, job headquarters, tool yards, etc., will be considered part of the site of the work, provided they are dedicated exclusively or nearly so to performance on the contract and are located in proximity to the actual construction location that it would be reasonable to include them.

52.0-4048 QUANTITY ESTIMATES

Estimates of quantities involved in certain items of work for which bids are being solicited on a lump sum or job basis have been made for the use of the Government. Copies of these quantity estimates may be obtained from the U S Army Engineer District Memphis, 167 North Main Street, Room 762, Memphis, Tennessee 38103-1894, telephone 901/544-3236, or visit our website at http://www.mvm.usace.army.mil/

It is to be expressly understood that the accuracy of these estimates is in no way warranted and that the furnishing of this information to a bidder will not relieve him of his responsibility to estimate the quantities involved. It is further to be expressly understood that in no case will such estimate be used as a basis of claim against the Government.

52.0-4049 CONDITIONS AFFECTING THE WORK

Bidders should visit the site and take such other steps as may be reasonably necessary to ascertain the nature and location of the work, and the general and local conditions which can affect the work or the cost thereof. Failure to do so will not relieve bidders from responsibility for estimating properly the difficulty or cost of successfully performing the work. The Government will assume no responsibility for any understanding or representations concerning conditions made by any of its officers or agents prior to the execution of the contract, unless included in the Solicitation, the specifications, or related documents.

52.0-4055 NEGOTIATIONS AFTER SEALED BIDDING

(a) This clause applies if after bid opening the Contracting Officer determines that all otherwise acceptable bids received are at unreasonable prices, or only one bid is received and the Contracting Officer cannot determine the reasonableness of the bid price, or no responsive bid has been received from a responsible bidder; or the bids were not independently arrived at in open competition, were collusive, or were submitted in bad faith.

(b) The Government has the option to reject all bids received in response to the sealed bid advertisement and initiate negotiation. Negotiations will include soliciting offers from each responsible bidder that submits a bid in response to the solicitation.

(c) If after bid opening the Contracting Officer determines under (a) above that negotiations are in the best interest of the Government, the following steps will be followed:

(1) An amendment to the sealed bid advertisement will be issued to each responsible bidder changing the solicitation number

to a request for proposal number. The amendment will also make any necessary changes to the scope of work.

(2) A cover letter signed by the negotiator will accompany the amendment explaining the procedures to be followed during negotiations.

(3) In the event there is only one responsible bidder under the initial sealed bid solicitation, cost or pricing data requirements set forth in FAR 15.804 will apply as will clause FAR 52.215-2, "Audit and Records - Negotiation".

52.0-4058 PROGRAM DATA

AUTHORITY: The work provided for herein is authorized by the Flood Control Act approved 15 JUN 1936, as amended.

52.0-4060 REVISION AND AMENDMENT TO SOLICITATION FOR BIDS

The right is reserved, as the interest of the Government may require, to revise or amend the specifications or drawings or both prior to the date set for opening bids. Such revisions and amendments, if any, will be announced by an amendment or amendments to this Solicitation for Bids. If revisions and amendments are of a nature which requires material changes in quantities or prices bid or both, the date set for opening bids may be postponed by such number of days as in the opinion of the issuing officer will enable bidders to revise their bids. In such cases, the amendment will include an announcement of new date for opening bids.

52.0-4078 (FAR 52.236-27) SITE VISIT (CONSTRUCTION) (ALTERNATE I) (FEB 1995)

(a) The clauses at 52.236-2, Differing Site Conditions, and 52.236-3, Site Investigations and Conditions Affecting the Work, will be included in any contract awarded as a result of this solicitation. Accordingly, bidders are urged and expected to inspect the site where the work will be performed.

(b) Two organized site visits have been scheduled for **13 Sep 2001** and **20 Sep 2001**.

(c) Bidders desiring a site visit shall contact the Area Engineer at least one day prior to the scheduled site visit.

NAME: Donald R. Tutor
Area Engineer

ADDRESS: Wynne Area Office
1932 N. Falls Boulevard
P. O. Box 729
Wynne, Arkansas 72396-0729

TELEPHONE: 901/544-3851 or 870/238-7983

COLLECT TELEPHONE CALLS WILL NOT BE ACCEPTED.

(End of Provision)

52.204-6 DATA UNIVERSAL NUMBERING SYSTEM (DUNS) NUMBER (JUN 99)

(a) Contractor identification is essential for complying with statutory contract reporting requirements. Therefore, the offeror is requested to enter, in the block with its name and address on the Standard Form 33 or similar document, the annotation "DUNS" followed by the DUNS number which identifies the offeror's name and address exactly as stated in the offer.

(b) If the offeror does not have a DUNS number, it should contact Dun and Bradstreet directly to obtain one. A DUNS number will be provided immediately by telephone at no charge to the offeror. For information on obtaining a DUNS number, the offeror, if located within the United States, should call Dun and Bradstreet at 1-800-333-0505. The offeror should be prepared to provide the following information:

(1) Company name.

(2) Company address.

(3) Company telephone number.

(4) Line of business.

(5) Chief executive officer/key manager.

(6) Date the company was started.

(7) Number of people employed by the company.

(8) Company affiliation.

(c) Offerors located outside the United States may obtain the location and phone number of the local Dun and Bradstreet Information Services office from the Internet Home Page at http://www.customerservice@dnb.com/. If an offeror is unable to locate a local service center, it may send an e-mail to Dun and Bradstreet at globalinfo@dnb.com.

(End of provision)

52.211-2 AVAILABILITY OF SPECIFICATIONS LISTED IN THE DOD INDEX OF SPECIFICATIONS AND STANDARDS (DODISS) AND DESCRIPTIONS LISTED IN THE ACQUISITION MANAGEMENT SYSTEMS AND DATA REQUIREMENTS CONTROL LIST, DOD 5010.12-L (DEC 1999)

Copies of specifications, standards, and data item descriptions cited in this solicitation may be obtained--

(a) From the ASSIST database via the Internet at http://assist.daps.mil; or

(b) By submitting a request to the--Department of Defense Single Stock Point (DoDSSP), Building 4, Section D, 700 Robbins Avenue, Philadelphia, PA 19111-5094, Telephone (215) 697-2667/2179, Facsimile (215) 697-1462.

(End of provision)

52.214-1 SOLICITATION DEFINITIONS--SEALED BIDDING (JUL 1987)

"Government" means United States Government.

"Offer" means "bid" in sealed bidding.

"Solicitation" means an invitation for bids in sealed bidding.

(End of provision)

52.214-3 AMENDMENTS TO INVITATIONS FOR BIDS (DEC 1989)

(a) If this solicitation is amended, then all terms and conditions which are not modified remain unchanged.

(b) Bidders shall acknowledge receipt of any amendment to this solicitation (1) by signing and returning the amendment, (2) by identifying the amendment number and date in the space provided for this purpose on the form for submitting a bid, (3) by letter or telegram, or (4) by facsimile, if facsimile bids are authorized in the solicitation. The Government must receive the acknowledgment by the time and at the place specified for receipt of bids.

(End of provision)

52.214-4 FALSE STATEMENTS IN BIDS (APR 1984)

Bidders must provide full, accurate, and complete information as required by this solicitation and its attachments. The penalty for making false statements in bids is prescribed in 18 U.S.C. 1001.

(End of provision)

52.214-5 SUBMISSION OF BIDS (MAR 1997)

(a) Bids and bid modifications shall be submitted in sealed envelopes or packages (unless submitted by electronic means) (1) addressed to the office specified in the solicitation, and (2) showing the time and date specified for receipt, the solicitation number, and the name and address of the bidder.

(b) Bidders using commercial carrier services shall ensure that the bid is addressed and marked on the outermost envelope or wrapper as prescribed in subparagraphs (a)(1) and (2) of this provision when delivered to the office specified in the solicitation.

(c) Telegraphic bids will not be considered unless authorized by the solicitation; however, bids may be modified or withdrawn by written or telegraphic notice.

(d) Facsimile bids, modifications, or withdrawals, will not be considered unless authorized by the solicitation.

(e) Bids submitted by electronic commerce shall be considered only if the electronic commerce method was specifically stipulated or permitted by the solicitation.

52.214-6 EXPLANATION TO PROSPECTIVE BIDDERS (APR 1984)

Any prospective bidder desiring an explanation or interpretation of the solicitation, drawings, specifications, etc., must request it in writing soon enough to allow a reply to reach all prospective bidders before the submission of their bids. Oral explanations or instructions given before the award of a contract will not be binding. Any information

given a prospective bidder concerning a solicitation will be furnished promptly to all other prospective bidders as an amendment to the solicitation, if that information is necessary in submitting bids or if the lack of it would be prejudicial to other prospective bidders.

(End of provision)

52.214-7 LATE SUBMISSIONS, MODIFICATIONS, AND WITHDRAWALS OF BIDS (NOV 1999)

(a) Bidders are responsible for submitting bids, and any modifications or withdrawals, so as to reach the Government office designated in the invitation for bids (IFB) by the time specified in the IFB. If no time is specified in the IFB, the time for receipt is 4:30 p.m., local time, for the designated Government office on the date that bids are due.

(b)(1) Any bid, modification, or withdrawal received at the Government office designated in the IFB after the exact time specified for receipt of bids is “late” and will not be considered unless it is received before award is made, the Contracting Officer determines that accepting the late bid would not unduly delay the acquisition; and--

(i) If it was transmitted through an electronic commerce method authorized by the IFB, it was received at the initial point of entry to the Government infrastructure not later than 5:00 p.m. one working day prior to the date specified for receipt of bids; or

(ii) There is acceptable evidence to establish that it was received at the Government installation designated for receipt of bids and was under the Government's control prior to the time set for receipt of bids.

(2) However, a late modification of an otherwise successful bid that makes its terms more favorable to the Government, will be considered at any time it is received and may be accepted.

(c) Acceptable evidence to establish the time of receipt at the Government installation includes the time/date stamp of that installation on the bid wrapper, other documentary evidence of receipt maintained by the installation, or oral testimony or statements of Government personnel.

(d) If an emergency or unanticipated event interrupts normal Government processes so that bids cannot be received at the Government office designated for receipt of bids by the exact time specified in the IFB and urgent Government requirements preclude amendment of the IFB, the time specified for receipt of bids will be deemed to be extended to the same time of day specified in the solicitation on the first work day on which normal Government processes resume.

(e) Bids may be withdrawn by written notice received at any time before the exact time set for receipt of bids. If the IFB authorizes facsimile bids, bids may be withdrawn via facsimile received at any time before the exact time set for receipt of bids, subject to the conditions specified in the provision at 52.214-31, Facsimile Bids. A bid may be withdrawn in person by a bidder or its authorized representative if, before the exact time set for receipt of bids, the identity of the person requesting withdrawal is established and the person signs a receipt for the bid.

(End of provision)

52.214-18 PREPARATION OF BIDS--CONSTRUCTION (APR 1984)

(a) Bids must be (1) submitted on the forms furnished by the Government or on copies of those forms, and (2) manually signed. The person signing a bid must initial each erasure or change appearing on any bid form.

(b) The bid form may require bidders to submit bid prices for one or more items on various bases, including--

(1) Lump sum bidding;

(2) Alternate prices;

(3) Units of construction; or

(4) Any combination of subparagraphs (1) through (3) above.

(c) If the solicitation requires bidding on all items, failure to do so will disqualify the bid. If bidding on all items is not required, bidders should insert the words "no bid" in the space provided for any item on which no price is submitted.

(d) Alternate bids will not be considered unless this solicitation authorizes their submission.

52.214-19 CONTRACT AWARD--SEALED BIDDING--CONSTRUCTION (AUG 1996)

(a) The Government will evaluate bids in response to this solicitation without discussions and will award a contract to the responsible bidder whose bid, conforming to the solicitation, will be most advantageous to the Government, considering only price and the price-related factors specified elsewhere in the solicitation.

(b) The Government may reject any or all bids, and waive informalities or minor irregularities in bids received.

(c) The Government may accept any item or combination of items, unless doing so is precluded by a restrictive limitation in the solicitation or the bid.

(d) The Government may reject a bid as nonresponsive if the prices bid are materially unbalanced between line items or subline items. A bid is materially unbalanced when it is based on prices significantly less than cost for some work and prices which are significantly overstated in relation to cost for other work, and if there is a reasonable doubt that the bid will result in the lowest overall cost to the Government even though it may be the low evaluated bid, or if it is so unbalanced as to be tantamount to allowing an advance payment.

52.214-34 SUBMISSION OF OFFERS IN THE ENGLISH LANGUAGE (APR 1991)

Offers submitted in response to this solicitation shall be in the English language. Offers received in other than English shall be rejected.

(End of provision)

52.214-35 SUBMISSION OF OFFERS IN U.S. CURRENCY (APR 1991)

Offers submitted in response to this solicitation shall be in terms of U.S. dollars. Offers received in other than U.S. dollars shall be rejected.

(End of provision)

52.214-5000 APPARENT CLERICAL MISTAKES (MAR 1995)--EFARS

(a) For the purpose of initial evaluations of bids, the following will be utilized in the resolving arithmetic discrepancies found on the face of bidding schedule as submitted by the bidder:

(1) Obviously misplaced decimal points will be corrected;
(2) Discrepancy between unit price and extended price, the unit price will govern;
(3) Apparent errors in extension of unit prices will be corrected;
(4) Apparent errors in addition of lump-sum and extended prices will be corrected.

(b) For the purpose of bid evaluation, the government will proceed on the assumption that the bidder intends his bid to be evaluated on basis of the unit prices, the totals arrived at by resolution of arithmetic discrepancies as provided above and the bid will be so reflected on the abstract of bids.

(c) These correction procedures shall not be used to resolve any ambiguity concerning which bid is low.

(End of statement)

52.216-1 TYPE OF CONTRACT (APR 1984)

The Government contemplates award of a firm, fixed-price construction contract resulting from this solicitation.

(End of clause)

52.225-12 NOTICE OF BUY AMERICAN ACT REQUIREMENT--CONSTRUCTION MATERIALS UNDER TRADE AGREEMENTS (FEB 2000)

(a) Definitions. Construction material, designated country construction material, domestic construction material, foreign construction material, and NAFTA country construction material, as used in this provision, are defined in the clause of this solicitation entitled "Buy American Act--Balance of Payments Program--Construction Materials under Trade Agreements" (Federal Acquisition Regulation (FAR) clause 52.225-11).

(b) Requests for determination of inapplicability. An offeror requesting a determination regarding the inapplicability of the Buy American Act or Balance of Payments Program should submit the request to the Contracting Officer in time to allow a determination before submission of offers. The offeror shall include the information and applicable supporting data required by paragraphs (c) and (d) of FAR clause 52.225-11 in the request. If an offeror has not requested a determination regarding the inapplicability of the Buy American Act or Balance of Payments Program before submitting its offer, or has not received a response to a previous request, the offeror shall include the information and supporting data in the offer.

(c) Evaluation of offers. (1) The Government will evaluate an offer requesting exception to the requirements of the Buy American Act or Balance of Payments Program, based on claimed unreasonable cost of domestic construction materials, by adding to the offered price the appropriate percentage of the cost of such foreign construction material, as specified in paragraph (b)(4)(i) of FAR clause 52.225-11.

(2) If evaluation results in a tie between an offeror that requested the substitution of foreign construction material based on unreasonable cost and an offeror that did not request an exception, the Contracting Officer will award to the offeror that did not request an exception based on unreasonable cost.

(d) Alternate offers. (1) When an offer includes foreign construction material, other than designated country or NAFTA country construction material, that is not listed by the Government in this solicitation in paragraph (b)(3) of FAR clause 52.225-11, the offeror also may submit an alternate offer based on use of equivalent domestic, designated country, or NAFTA country construction material.

(2) If an alternate offer is submitted, the offeror shall submit a separate Standard Form 1442 for the alternate offer, and a separate price comparison table prepared in accordance with paragraphs (c) and (d) of FAR clause 52.225-11 for the offer that is based on the use of any foreign construction material for which the Government has not yet determined an exception applies.

(3) If the Government determines that a particular exception requested in accordance with paragraph (c) of FAR clause 52.225-11 does not apply, the Government will evaluate only those offers based on use of the equivalent domestic, designated country, or NAFTA country construction material, and the offeror shall be required to furnish such domestic, designated country, or NAFTA country construction material. An offer based on use of the foreign construction material for which an exception was requested--

(i) Will be rejected as nonresponsive if this acquisition is conducted by sealed bidding; or

(ii) May be accepted if revised during negotiations.

(End of provision)

52.232-38 SUBMISSION OF ELECTRONIC FUNDS TRANSFER INFORMATION WITH OFFER (MAY 1999)

The offeror shall provide, with its offer, the following information that is required to make payment by electronic funds transfer (EFT) under any contract that results from this solicitation. This submission satisfies the requirement to provide EFT information under paragraphs (b)(1) and (j) of the clause at 52.232-34, Payment by Electronic Funds Transfer--Other than Central Contractor Registration.

(1) The solicitation number (or other procurement identification number).

(2) The offeror's name and remittance address, as stated in the offer.

(3) The signature (manual or electronic, as appropriate), title, and telephone number of the offeror's official authorized to provide this information.

(4) The name, address, and 9-digit Routing Transit Number of the offeror's financial agent.

(5) The offeror's account number and the type of account (checking, savings, or lockbox).

(6) If applicable, the Fedwire Transfer System telegraphic abbreviation of the offeror's financial agent.

(7) If applicable, the offeror shall also provide the name, address, telegraphic abbreviation, and 9-digit Routing Transit Number of the correspondent financial

institution receiving the wire transfer payment if the offeror's financial agent is not directly on-line to the Fedwire and, therefore, not the receiver of the wire transfer payment.

(End of provision)

52.233-2 SERVICE OF PROTEST (AUG 1996)

(a) Protests, as defined in section 33.101 of the Federal Acquisition Regulation, that are filed directly with an agency, and copies of any protests that are filed with the General Accounting Office (GAO), shall be served on the Contracting Officer (addressed as follows) by obtaining written and dated acknowledgment of receipt from

Chief, Contracting Division
ATTN: CEMVM-CT – Room 681
U.S. Army Engineer District, Memphis
167 North Main Street B202
Memphis, TN 38104-1894

(b) The copy of any protest shall be received in the office designated above within one day of filing a protest with the GAO.

(End of provision)

52.252-1 SOLICITATION PROVISIONS INCORPORATED BY REFERENCE (FEB 1998)

This solicitation incorporates one or more solicitation provisions by reference, with the same force and effect as if they were given in full text. Upon request, the Contracting Officer will make their full text available. The offeror is cautioned that the listed provisions may include blocks that must be completed by the offeror and submitted with its quotation or offer. In lieu of submitting the full text of those provisions, the offeror may identify the provision by paragraph identifier and provide the appropriate information with its quotation or offer. Also, the full text of a solicitation provision may be accessed electronically at this/these address(es):

http://www.arnet.gov/far
http://farsite.hill.af.mil
http://www.dtic.mil/dfars

252.204-7001 COMMERCIAL AND GOVERNMENT ENTITY (CAGE) CODE REPORTING (AUG 1999)

(a) The offeror is requested to enter its CAGE code on its offer in the block with its name and address. The CAGE code entered must be for that name and address. Enter “CAGE” before the number.

(b) If the offeror does not have a CAGE code, it may ask the Contracting Officer to request one from the Defense Logistics Information Service (DLIS). The Contracting Officer will--

(1) Ask the Contractor to complete section B of a DD Form 2051, Request for Assignment of a Commercial and Government Entity (CAGE) Code;

(2) Complete section A and forward the form to DLIS; and

(3) Notify the Contractor of its assigned CAGE code.

(c) Do not delay submission of the offer pending receipt of a CAGE code.

(End of provision)

END OF SECTION 00100

SECTION 00600
REPRESENTATIONS & CERTIFICATIONS
TABLE OF CONTENTS

52.0-4031 CORPORATE CERTIFICATION 1

52.203-2 CERTIFICATE OF INDEPENDENT PRICE DETERMINATION (APR 1985) 2

52.203-11 CERTIFICATION AND DISCLOSURE REGARDING PAYMENTS TO INFLUENCE CERTAIN FEDERAL TRANSACTIONS (APR 1991) 3

52.204-3 TAXPAYER IDENTIFICATION (OCT 1998) 3

52.204-5 WOMEN-OWNED BUSINESS (OTHER THAN SMALL BUSINESS) (MAY 1999) 5

52.209-5 CERTIFICATION REGARDING DEBARMENT, SUSPENSION, PROPOSED DEBARMENT, AND OTHER RESPONSIBILITY MATTERS (APR 2001) 6

52.219-1 SMALL BUSINESS PROGRAM REPRESENTATIONS (MAY 2001) ALTERNATE I (OCT 2000) & ALTERNATE II (OCT 2000) 7

52.219-2 EQUAL LOW BIDS. (OCT 1995) 10

52.219-19 SMALL BUSINESS CONCERN REPRESENTATION FOR THE SMALL BUSINESS COMPETITIVENESS DEMONSTRATION PROGRAM (OCT 2000) 10

52.219-21 SMALL BUSINESS SIZE REPRESENTATION FOR TARGETED INDUSTRY CATEGORIES UNDER THE SMALL BUSINESS COMPETITIVENESS DEMONSTRATION PROGRAM (MAY 1999) 11

52.222-21 PROHIBITION OF SEGREGATED FACILITIES (FEB 1999) 12

52.222-22 PREVIOUS CONTRACTS AND COMPLIANCE REPORTS (FEB 1999) 13

52.223-13 CERTIFICATION OF TOXIC CHEMICAL RELEASE REPORTING (OCT 2000) 13

252.209-7001 DISCLOSURE OF OWNERSHIP OR CONTROL BY THE GOVERNMENT OF A TERRORIST COUNTRY (MAR 1998) 14

252.247-7022 REPRESENTATION OF EXTENT OF TRANSPORTATION BY SEA (AUG 1992) 15

SECTION 00600
REPRESENTATIONS & CERTIFICATIONS

CLAUSES INCORPORATED BY FULL TEXT

52.0-4031 CORPORATE CERTIFICATION

IF A BIDDER IS A CORPORATION OR IF CORPORATION IS PARTICIPATING IN A JOINT VENTURE, PLEASE COMPLETE THE FOLLOWING CERTIFICATION:

I, _____, certify that I am secretary of the corporation named as Contractor herein; that _____ who signed this contract on behalf of the Contractor; was then _____ of said corporation; that said contract was duly signed for and on behalf of said corporation by authority of its governing body and is within the scope of its corporate powers.

(CORPORATE SEAL)

_____
(Secretary)

IF A CORPORATION IS PARTICIPATING AS A JOINT VENTURE, ITS SECRETARY MUST SUBMIT A CERTIFICATE STATING THE CORPORATION IS AUTHORIZED TO PARTICIPATE.

52.203-2 CERTIFICATE OF INDEPENDENT PRICE DETERMINATION (APR 1985)

(a) The offeror certifies that --

(1) The prices in this offer have been arrived at independently, without, for the purpose of restricting competition, any consultation, communication, or agreement with any other offeror or competitor relating to (i) those prices, (ii) the intention to submit an offer, or (iii) the methods of factors used to calculate the prices offered:

(2) The prices in this offer have not been and will not be knowingly disclosed by the offeror, directly or indirectly, to any other offeror or competitor before bid opening (in the case of a sealed bid solicitation) or contract award (in the case of a negotiated solicitation) unless otherwise required by law; and

(3) No attempt has been made or will be made by the offeror to induce any other concern to submit or not to submit an offer for the purpose of restricting competition.

(b) Each signature on the offer is considered to be a certification by the signatory that the signatory --

(1) Is the person in the offeror's organization responsible for determining the prices offered in this bid or proposal, and that the signatory has not participated and will not participate in any action contradictory to subparagraphs (a)(1) through (a)(3) above; or

(2) (i) Has been authorized, in writing, to act as an agent for the following principals in certifying that those principals have not participated, and will not participate in any action contrary to subparagraphs (a)(1) through (a)(3) above _____ (insert full name of person(s) in the offeror's organization responsible for determining the prices offered in this bid or proposal, and the title of his or her position in the offeror's organization);

(ii) As an authorized agent, does certify that the principals named in subdivision (b)(2)(i) above have not participated, and will not participate, in any action contrary to subparagraphs (a)(1) through (a)(3) above; and

(iii) As an agent, has not personally participated, and will not participate, in any action contrary to subparagraphs (a)(1) through (a)(3) above.

(c) If the offeror deletes or modifies subparagraph (a)(2) above, the offeror must furnish with its offer a signed statement setting forth in detail the circumstances of the disclosure.

(End of clause)

52.203-11 CERTIFICATION AND DISCLOSURE REGARDING PAYMENTS TO INFLUENCE CERTAIN FEDERAL TRANSACTIONS (APR 1991)

(a) The definitions and prohibitions contained in the clause, at FAR 52.203-12, Limitation on Payments to Influence Certain Federal Transactions, included in this solicitation, are hereby incorporated by reference in paragraph (b) of this Certification.

(b) The offeror, by signing its offer, hereby certifies to the best of his or her knowledge and belief that on or after December 23, 1989,--

(1) No Federal appropriated funds have been paid or will be paid to any person for influencing or attempting to influence an officer or employee of any agency, a Member of Congress, an officer or employee of Congress, or an employee of a member of Congress on his or her behalf in connection with the awarding of any Federal contract, the making of any Federal grant, the making of any Federal loan, the entering into of any cooperative agreement, and the extension, continuation, renewal, amendment or modification of any Federal contract, grant, loan, or cooperative agreement;

(2) If any funds other than Federal appropriated funds (including profit or fee received under a covered Federal transaction) have been paid, or will be paid to any person for influencing or attempting to influence an officer or employee of any agency, a Member of Congress, an officer or employee of Congress or an employee of a Member of Congress on his or her behalf in connection with this solicitation, the offeror shall complete and submit, with its offer, OMB standard form LLL, Disclosure of Lobbying Activities, to the Contracting Officer; and

(3) He or she will include the language of this certification in all subcontract awards at any tier and require that all recipients of subcontract awards in excess of $100,000 shall certify and disclose accordingly.

(c) Submission of this certification and disclosure is a prerequisite for making or entering into this contract imposed by section 1352, title 31, United States Code. Any person who makes an expenditure prohibited under this provision, shall be subject to a civil penalty of not less than $10,000, and not more than $100,000, for each such failure.

(End of provision)

52.204-3 TAXPAYER IDENTIFICATION (OCT 1998)

(a) Definitions.

Common parent, as used in this provision, means that corporate entity that owns or controls an affiliated group of corporations that files its Federal income tax returns on a consolidated basis, and of which the offeror is a member.

Taxpayer Identification Number (TIN), as used in this provision, means the number required by the Internal Revenue Service (IRS) to be used by the offeror in reporting income tax and other returns. The TIN may be either a Social Security Number or an Employer Identification Number.

(b) All offerors must submit the information required in paragraphs (d) through (f) of this provision to comply with debt collection requirements of 31 U.S.C. 7701(c) and 3325(d), reporting requirements of 26 U.S.C. 6041, 6041A, and 6050M, and implementing regulations issued by the IRS. If the resulting contract is subject to the payment reporting requirements described in Federal Acquisition Regulation (FAR) 4.904, the failure or refusal by the offeror to furnish the information may result in a 31 percent reduction of payments otherwise due under the contract.

(c) The TIN may be used by the Government to collect and report on any delinquent amounts arising out of the offeror's relationship with the Government (31 U.S.C. 7701(c)(3)). If the resulting contract is subject to the payment reporting requirements described in FAR 4.904, the TIN provided hereunder may be matched with IRS records to verify the accuracy of the offeror's TIN.

(d) Taxpayer Identification Number (TIN).

___ TIN:.----------

___ TIN has been applied for.

___ TIN is not required because:

___ Offeror is a nonresident alien, foreign corporation, or foreign partnership that does not have income effectively connected with the conduct of a trade or business in the United States and does not have an office or place of business or a fiscal paying agent in the United States;

___ Offeror is an agency or instrumentality of a foreign government;

___ Offeror is an agency or instrumentality of the Federal Government.

(e) Type of organization.

___ Sole proprietorship;

___ Partnership;

___ Corporate entity (not tax-exempt);

___ Corporate entity (tax-exempt);

___ Government entity (Federal, State, or local);

___ Foreign government;

___ International organization per 26 CFR 1.6049-4;

___ Other----------

(f) Common parent.

___ Offeror is not owned or controlled by a common parent as defined in paragraph (a) of this provision.

___ Name and TIN of common parent:

Name----------

TIN----------

(End of provision)

52.204-5 WOMEN-OWNED BUSINESS (OTHER THAN SMALL BUSINESS) (MAY 1999)

(a) Definition. Women-owned business concern, as used in this provision, means a concern that is at least 51 percent owned by one or more women; or in the case of any publicly owned business, at least 51 percent of its stock is owned by one or more women; and whose management and daily business operations are controlled by one or more women.

(b) Representation. [Complete only if the offeror is a women-owned business concern and has not represented itself as a small business concern in paragraph (b)(1) of FAR 52.219-1, Small Business Program Representations, of this solicitation.] The offeror represents that it ( ) is a women-owned business concern.

(End of provision)

52.209-5 CERTIFICATION REGARDING DEBARMENT, SUSPENSION, PROPOSED DEBARMENT, AND OTHER RESPONSIBILITY MATTERS (APR 2001)

(a)(1) The Offeror certifies, to the best of its knowledge and belief, that--

(i) The Offeror and/or any of its Principals--

(A) Are ( ) are not ( ) presently debarred, suspended, proposed for debarment, or declared ineligible for the award of contracts by any Federal agency;

(B) Have ( ) have not ( ), within a three-year period preceding this offer, been convicted of or had a civil judgment rendered against them for: commission of fraud or a criminal offense in connection with obtaining, attempting to obtain, or performing a public (Federal, state, or local) contract or subcontract; violation of Federal or state antitrust statutes relating to the submission of offers; or commission of embezzlement, theft, forgery, bribery, falsification or destruction of records, making false statements, tax evasion, or receiving stolen property; and

(C) Are ( ) are not ( ) presently indicted for, or otherwise criminally or civilly charged by a governmental entity with, commission of any of the offenses enumerated in subdivision (a)(1)(i)(D) of this provision.

(ii) The Offeror has ( ) has not ( ), within a three-year period preceding this offer, had one or more contracts terminated for default by any Federal agency.

(D) Have ( ) have not ( ), within a three-year period preceding this offer, been convicted of or had a civil judgment rendered against them for: commission of fraud or a criminal offense in connection with obtaining, attempting to obtain, or performing a public (Federal, state, or local) contract or subcontract; violation of Federal or state antitrust statutes relating to the submission of offers; or commission of embezzlement, theft, forgery, bribery, falsification or destruction of records, making false statements, tax evasion, or receiving stolen property; and

(E) Are ( ) are not ( ) presently indicted for, or otherwise criminally or civilly charged by a governmental entity with, commission of any of the offenses enumerated in subdivision (a)(1)(i)(B) of this provision.

(2) "Principals," for the purposes of this certification, means officers; directors; owners; partners; and, persons having primary management or supervisory responsibilities within a business entity (e.g., general manager; plant manager; head of a subsidiary, division, or business segment, and similar positions).

THIS CERTIFICATION CONCERNS A MATTER WITHIN THE JURISDICTION OF AN AGENCY OF THE UNITED STATES AND THE MAKING OF A FALSE, FICTITIOUS, OR FRAUDULENT CERTIFICATION MAY RENDER THE MAKER

SUBJECT TO PROSECUTION UNDER SECTION 1001, TITLE 18, UNITED STATES CODE.

(b) The Offeror shall provide immediate written notice to the Contracting Officer if, at any time prior to contract award, the Offeror learns that its certification was erroneous when submitted or has become erroneous by reason of changed circumstances.

(c) A certification that any of the items in paragraph (a) of this provision exists will not necessarily result in withholding of an award under this solicitation. However, the certification will be considered in connection with a determination of the Offeror's responsibility. Failure of the Offeror to furnish a certification or provide such additional information as requested by the Contracting Officer may render the Offeror nonresponsible.

(d) Nothing contained in the foregoing shall be construed to require establishment of a system of records in order to render, in good faith, the certification required by paragraph (a) of this provision. The knowledge and information of an Offeror is not required to exceed that which is normally possessed by a prudent person in the ordinary course of business dealings.

(e) The certification in paragraph (a) of this provision is a material representation of fact upon which reliance was placed when making award. If it is later determined that the Offeror knowingly rendered an erroneous certification, in addition to other remedies available to the Government, the Contracting Officer may terminate the contract resulting from this solicitation for default.

(End of provision)

52.219-1 SMALL BUSINESS PROGRAM REPRESENTATIONS (MAY 2001) ALTERNATE I (OCT 2000) & ALTERNATE II (OCT 2000)

(a)(1) The North American Industry Classification System (NAICS) code for this acquisition is **234990** .

(2) The small business size standard is **$27.5M** .

(3) The small business size standard for a concern which submits an offer in its own name, other than on a construction or service contract, but which proposes to furnish a product which it did not itself manufacture, is 500 employees.

(b) Representations. (1) The offeror represents as part of its offer that it ( ) is, ( ) is not a small business concern.

(2) (Complete only if the offeror represented itself as a small business concern in paragraph (b)(1) of this provision.) The offeror represents, for general statistical

purposes, that it ( ) is, ( ) is not a small disadvantaged business concern as defined in 13 CFR 124.1002.

(3) (Complete only if the offeror represented itself as a small business concern in paragraph (b)(1) of this provision.) The offeror represents as part of its offer that it ( ) is, ( ) is not a women-owned small business concern.

(4) (Complete only if the offeror represented itself as a small business concern in paragraph (b)(1) of this provision.) The offeror represents as part of its offer that it ( ) is, ( ) is not a veteran-owned small business concern.

(5) (Complete only if the offeror represented itself as a veteran-owned small business concern in paragraph (b)(4) of this provision.) The offeror represents as part of its offer that it ( ) is, ( ) is not a service-disabled veteran-owned small business concern.

(6) (Complete only if offeror represented itself as small business concern in paragraph (b)(1) of this provision). The offeror represents, as part of its offer, that--

(i) It ( ) is, ( ) is not a HUBZone small business concern listed, on the date of this representation, on the List of Qualified HUBZone Small Business Concerns maintained by the Small Business Administration, and no material change in ownership and control, principal office, or HUBZone employee percentage has occurred since it was certified by the Small Business Administration in accordance with 13 CFR Part 126; and

(ii) It ( ) is, ( ) is not a joint venture that complies with the requirements of 13 CFR Part 126, and the representation in paragraph (b)(6)(i) of this provision is accurate for the HUBZone small business concern or concerns that are participating in the joint venture. (The offeror shall enter the name or names of the HUBZone small business concern or concerns that are participating in the joint venture: _____.) Each HUBZone small business concern participating in the joint venture shall submit a separate signed copy of the HUBZone representation.

(7) (Complete if offeror represented itself as disadvantaged in paragraph (b)(2) of this provision.) The offeror shall check the category in which its ownership falls:

( ) Black American.

( ) Hispanic American.

( ) Native American (American Indians, Eskimos, Aleuts, or Native Hawaiians).

( ) Asian-Pacific American (persons with origins from Burma, Thailand, Malaysia, Indonesia, Singapore, Brunei, Japan, China, Taiwan, Laos, Cambodia (Kampuchea), Vietnam, Korea, The Philippines, U.S. Trust Territory of the Pacific Islands (Republic of Palau), Republic of the Marshall Islands, Federated States of Micronesia, the

Commonwealth of the Northern Mariana Islands, Guam, Samoa, Macao, Hong Kong, Fiji, Tonga, Kiribati, Tuvalu, or Nauru).

( ) Subcontinent Asian (Asian-Indian) American (persons with origins from India, Pakistan, Bangladesh, Sri Lanka, Bhutan, the Maldives Islands, or Nepal).

(c) Definitions. As used in this provision--

Service-disabled veteran-owned small business concern--

(1) Means a small business concern--

(i) Not less than 51 percent of which is owned by one or more service-disabled veterans or, in the case of any publicly owned business, not less than 51 percent of the stock of which is owned by one or more service-disabled veterans; and

(ii) The management and daily business operations of which are controlled by one or more service-disabled veterans or, in the case of a veteran with permanent and severe disability, the spouse or permanent caregiver of such veteran.

(2) Service-disabled veteran means a veteran, as defined in 38 U.S.C. 101(2), with a disability that is service-connected, as defined in 38 U.S.C. 101(16).

Small business concern means a concern, including its affiliates, that is independently owned and operated, not dominant in the field of operation in which it is bidding on Government contracts, and qualified as a small business under the criteria in 13 CFR Part 121 and the size standard in paragraph (a) of this provision.

Veteran-owned small business concern means a small business concern--

(1) Not less than 51 percent of which is owned by one or more veterans (as defined at 38 U.S.C. 101(2)) or, in the case of any publicly owned business, not less than 51 percent of the stock of which is owned by one or more veterans; and

(2) The management and daily business operations of which are controlled by one or more veterans.

Women-owned small business concern means a small business concern --

(1) That is at least 51 percent owned by one or more women; in the case of any publicly owned business, at least 51 percent of the stock of which is owned by one or more women; and

(2) Whose management and daily business operations are controlled by one or more women.

(d) Notice.

(1) If this solicitation is for supplies and has been set aside, in whole or in part, for small business concerns, then the clause in this solicitation providing notice of the set-aside contains restrictions on the source of the end items to be furnished.

(2) Under 15 U.S.C. 645(d), any person who misrepresents a firm's status as a small, HUBZone small, small disadvantaged, or women-owned small business concern in order to obtain a contract to be awarded under the preference programs established pursuant to section 8(a), 8(d), 9, or 15 of the Small Business Act or any other provision of Federal law that specifically references section 8(d) for a definition of program eligibility, shall--

(i) Be punished by imposition of fine, imprisonment, or both;

(ii) Be subject to administrative remedies, including suspension and debarment; and

(iii) Be ineligible for participation in programs conducted under the authority of the Act.

(End of provision)

52.219-2 EQUAL LOW BIDS. (OCT 1995)

(a) This provision applies to small business concerns only.

(b) The bidder's status as a labor surplus area (LSA) concern may affect entitlement to award in case of tie bids. If the bidder wishes to be considered for this priority, the bidder must identify, in the following space, the LSA in which the costs to be incurred on account of manufacturing or production (by the bidder or the first-tier subcontractors) amount to more than 50 percent of the contract price.

_____

_____

(c) Failure to identify the labor surplus area as specified in paragraph (b) of this provision will preclude the bidder from receiving priority consideration. If the bidder is awarded a contract as a result of receiving priority consideration under this provision and would not have otherwise received award, the bidder shall perform the contract or cause the contract to be performed in accordance with the obligations of an LSA concern.

52.219-19 SMALL BUSINESS CONCERN REPRESENTATION FOR THE SMALL BUSINESS COMPETITIVENESS DEMONSTRATION PROGRAM (OCT 2000)

(a) Definition.

"Emerging small business" as used in this solicitation, means a small business concern whose size is no greater than 50 percent of the numerical size standard applicable to the North American Industry Classification System (NAICS) code assigned to a contracting opportunity.

(b) [Complete only if the Offeror has represented itself under the provision at 52.219-1 as a small business concern under the size standards of this solicitation.] The Offeror [ ] is, [ ] is not an emerging small business.

(c) (Complete only if the Offeror is a small business or an emerging small business, indicating its size range.)

Offeror's number of employees for the past 12 months (check this column if size standard stated in solicitation is expressed in terms of number of employees) or Offeror's average annual gross revenue for the last 3 fiscal years (check this column if size standard stated in solicitation is expressed in terms of annual receipts). (Check one of the following.)

No. of Employees	Avg. Annual Gross Revenues
____ 50 or fewer	____ $1 million or less
____ 51 - 100	____ $1,000,001 - $2 million
____ 101 - 250	____ $2,000,001 - $3.5 million
____ 251 - 500	____ $3,500,001 - $5 million
____ 501 - 750	____ $5,000,001 - $10 million
____ 751 - 1,000	____ $10,000,001 - $17 million
____ Over 1,000	____ Over $17 million

(End of provision)

52.219-21 SMALL BUSINESS SIZE REPRESENTATION FOR TARGETED INDUSTRY CATEGORIES UNDER THE SMALL BUSINESS COMPETITIVENESS DEMONSTRATION PROGRAM (MAY 1999)

(Complete only if the Offeror has represented itself under the provision at 52.219-1 as a small business concern under the size standards of this solicitation.)

Offeror's number of employees for the past 12 months (check this column if size standard stated in solicitation is expressed in terms of number of employees) or Offeror's average

annual gross revenue for the last 3 fiscal years (check this column if size standard stated in solicitation is expressed in terms of annual receipts). (Check one of the following.)

No. of Employees	Avg. Annual Gross Revenues
____ 50 or fewer	____ $1 million or less
____ 51 - 100	____ $1,000,001 - $2 million
____ 101 - 250	____ $2,000,001 - $3.5 million
____ 251 - 500	____ $3,500,001 - $5 million
____ 501 - 750	____ $5,000,001 - $10 million
____ 751 - 1,000	____ $10,000,001 - $17 million
____ 17 million	

(End of provision)

52.222-21 PROHIBITION OF SEGREGATED FACILITIES (FEB 1999)

(a) Segregated facilities, as used in this clause, means any waiting rooms, work areas, rest rooms and wash rooms, restaurants and other eating areas, time clocks, locker rooms and other storage or dressing areas, parking lots, drinking fountains, recreation or entertainment areas, transportation, and housing facilities provided for employees, that are segregated by explicit directive or are in fact segregated on the basis of race, color, religion, sex, or national origin because of written or oral policies or employee custom. The term does not include separate or single-user rest rooms or necessary dressing or sleeping areas provided to assure privacy between the sexes.

(b) The Contractor agrees that it does not and will not maintain or provide for its employees any segregated facilities at any of its establishments, and that it does not and will not permit its employees to perform their services at any location under its control where segregated facilities are maintained. The Contractor agrees that a breach of this clause is a violation of the Equal Opportunity clause in this contract.

(c) The Contractor shall include this clause in every subcontract and purchase order that is subject to the Equal Opportunity clause of this contract.

(End of clause)

52.222-22 PREVIOUS CONTRACTS AND COMPLIANCE REPORTS (FEB 1999)

The offeror represents that --

(a) [ ] It has, [ ] has not participated in a previous contract or subcontract subject to the Equal Opportunity clause of this solicitation;

(b) [ ] It has, [ ] has not, filed all required compliance reports; and

(c) Representations indicating submission of required compliance reports, signed by proposed subcontractors, will be obtained before subcontract awards.

(End of provision)

52.223-13 CERTIFICATION OF TOXIC CHEMICAL RELEASE REPORTING (OCT 2000)

(a) Submission of this certification is a prerequisite for making or entering into this contract imposed by Executive Order 12969, August 8, 1995.

(b) By signing this offer, the offeror certifies that--

(1) As the owner or operator of facilities that will be used in the performance of this contract that are subject to the filing and reporting requirements described in section 313 of the Emergency Planning and Community Right-to-Know Act of 1986 (EPCRA) (42 U.S.C. 11023) and section 6607 of the Pollution Prevention Act of 1990 (PPA) (42 U.S.C. 13106), the offeror will file and continue to file for such facilities for the life of the contract the Toxic Chemical Release Inventory Form (Form R) as described in sections 313(a) and (g) of EPCRA and section 6607 of PPA; or

(2) None of its owned or operated facilities to be used in the performance of this contract is subject to the Form R filing and reporting requirements because each such facility is exempt for at least one of the following reasons: (Check each block that is applicable.)

[ ] (i) The facility does not manufacture, process or otherwise use any toxic chemicals listed under section 313(c) of EPCRA, 42 U.S.C. 11023(c);

[ ] (ii) The facility does not have 10 or more full-time employees as specified in section 313.(b)(1)(A) of EPCRA 42 U.S.C. 11023(b)(1)(A);

[ ] (iii) The facility does not meet the reporting thresholds of toxic chemicals established under section 313(f) of EPCRA, 42 U.S.C. 11023(f) (including the alternate thresholds at 40 CFR 372.27, provided an appropriate certification form has been filed with EPA);

[ ] (iv) The facility does not fall within Standard Industrial Classification Code (SIC) major groups 20 through 39 or their corresponding North American Industry Classification System (NAICS) sectors 31 through 33; or

[ ] (v) The facility is not located within any State of the United States, the District of Columbia, the Commonwealth of Puerto Rico, Guam, American Samoa, the United States Virgin Islands, the Northern Mariana Islands, or any other territory or possession over which the United States has jurisdiction.

252.209-7001 DISCLOSURE OF OWNERSHIP OR CONTROL BY THE GOVERNMENT OF A TERRORIST COUNTRY (MAR 1998)

(a) "Definitions."

As used in this provision --

(a) "Government of a terrorist country" includes the state and the government of a terrorist country, as well as any political subdivision, agency, or instrumentality thereof.

(2) "Terrorist country" means a country determined by the Secretary of State, under section 6(j)(1)(A) of the Export Administration Act of 1979 (50 U.S.C. App. 2405(j)(i)(A)), to be a country the government of which has repeatedly provided support for such acts of international terrorism. As of the date of this provision, terrorist countries include: Cuba, Iran, Iraq, Libya, North Korea, Sudan, and Syria.

(3) "Significant interest" means --

(i) Ownership of or beneficial interest in 5 percent or more of the firm's or subsidiary's securities. Beneficial interest includes holding 5 percent or more of any class of the firm's securities in "nominee shares," "street names," or some other method of holding securities that does not disclose the beneficial owner;

(ii) Holding a management position in the firm, such as a director or officer;

(iii) Ability to control or influence the election, appointment, or tenure of directors or officers in the firm;

(iv) Ownership of 10 percent or more of the assets of a firm such as equipment, buildings, real estate, or other tangible assets of the firm; or

(v) Holding 50 percent or more of the indebtness of a firm.

(b) "Prohibition on award."

In accordance with 10 U.S.C. 2327, no contract may be awarded to a firm or a subsidiary

of a firm if the government of a terrorist country has a significant interest in the firm or subsidiary or, in the case of a subsidiary, the firm that owns the subsidiary, unless a waiver is granted by the Secretary of Defense.

(c) "Disclosure."

If the government of a terrorist country has a significant interest in the Offeror or a subsidiary of the Offeror, the Offeror shall disclosure such interest in an attachment to its offer. If the Offeror is a subsidiary, it shall also disclose any significant interest the government of a terrorist country has in any firm that owns or controls the subsidiary. The disclosure shall include --

(1) Identification of each government holding a significant interest; and

(2) A description of the significant interest held by each government.

(End of provision)

252.247-7022 REPRESENTATION OF EXTENT OF TRANSPORTATION BY SEA (AUG 1992)

(a) The Offeror shall indicate by checking the appropriate blank in paragraph (b) of this provision whether transportation of supplies by sea is anticipated under the resultant contract. The term supplies is defined in the Transportation of Supplies by Sea clause of this solicitation.

(b) Representation. The Offeror represents that it:

____ (1) Does anticipate that supplies will be transported by sea in the performance of any contract or subcontract resulting from this solicitation.

____ (2) Does not anticipate that supplies will be transported by sea in the performance of any contract or subcontract resulting from this solicitation.

(c) Any contract resulting from this solicitation will include the Transportation of Supplies by Sea clause. If the Offeror represents that it will not use ocean transportation, the resulting contract will also include the Defense FAR Supplement clause at 252.247-7024, Notification of Transportation of Supplies by Sea.

(End of provision)

END OF SECTION 00600

SECTION 00700
CONTRACT CLAUSES
TABLE OF CONTENTS

52.202-1 DEFINITIONS. (MAR 2001) 1

52.203-3 GRATUITIES (APR 1984) 3

52.203-5 COVENANT AGAINST CONTINGENT FEES (APR 1984) 4

52.203-7 ANTI-KICKBACK PROCEDURES. (JUL 1995) 4

52.203-8 CANCELLATION, RESCISSION, AND RECOVERY OF FUNDS FOR ILLEGAL OR IMPROPER ACTIVITY (JAN 1997) 6

52.203-10 PRICE OR FEE ADJUSTMENT FOR ILLEGAL OR IMPROPER ACTIVITY (JAN 1997) 7

52.203-12 LIMITATION ON PAYMENTS TO INFLUENCE CERTAIN FEDERAL TRANSACTIONS (JUN 1997) 8

52.204-4 PRINTED OR COPIED DOUBLE-SIDED ON RECYCLED PAPER (AUG 2000) 13

52.209-6 PROTECTING THE GOVERNMENT'S INTEREST WHEN SUBCONTRACTING WITH CONTRACTORS DEBARRED, SUSPENDED, OR PROPOSED FOR DEBARMENT (JUL 1995) ... 15

52.211-18 VARIATION IN ESTIMATED QUANTITY (APR 1984) 15

52.214-26 AUDIT AND RECORDS--SEALED BIDDING. (OCT 1997) 16

52.214-27 PRICE REDUCTION FOR DEFECTIVE COST OR PRICING DATA - MODIFICATIONS - SEALED BIDDING. (OCT 1997) 17

52.214-28 SUBCONTRACTOR COST OR PRICING DATA - MODIFICATIONS - SEALED BIDDING. (OCT 1997) 19

52.214-29 ORDER OF PRECEDENCE--SEALED BIDDING (JAN 1986) 20

52.219-8 UTILIZATION OF SMALL BUSINESS CONCERNS (OCT 2000) 20

52.222-3 CONVICT LABOR (AUG 1996) 22

52.222-4 CONTRACT WORK HOURS AND SAFETY STANDARDS ACT - OVERTIME COMPENSATION. (SEP 2000) 23

52.222-6 DAVIS-BACON ACT (FEB 1995) 24

52.222-7 WITHHOLDING OF FUNDS (FEB 1988) 26

52.222-8 PAYROLLS AND BASIC RECORDS (FEB 1988) 26

52.222-9 APPRENTICES AND TRAINEES (FEB 1988) 27

52.222-10 COMPLIANCE WITH COPELAND ACT REQUIREMENTS (FEB 1988) 29

52.222-11 SUBCONTRACTS (LABOR STANDARDS (FEB 1988) 29

52.222-12 CONTRACT TERMINATION--DEBARMENT (FEB 1988) 30

52.222-13 COMPLIANCE WITH DAVIS-BACON AND RELATED ACT REGULATIONS (FEB 1988) 30

52.222-14 DISPUTES CONCERNING LABOR STANDARDS (FEB 1988) 30

52.222-15 CERTIFICATION OF ELIGIBILITY (FEB 1988) 30

52.222-21 PROHIBITION OF SEGREGATED FACILITIES (FEB 1999) 30

52.222-26 EQUAL OPPORTUNITY (FEB 1999) 31

52.222-27 AFFIRMATIVE ACTION COMPLIANCE REQUIREMENTS FOR CONSTRUCTION (FEB 1999) 33

52.222-35 AFFIRMATIVE ACTION FOR DISABLED VETERANS AND VETERANS OF THE VIETNAM ERA (APR 1998) 38

52.222-36 AFFIRMATIVE ACTION FOR WORKERS WITH DISABILITIES (JUN 1998) 41

52.222-37 EMPLOYMENT REPORTS ON DISABLED VETERANS AND VETERANS OF THE VIETNAM ERA (JAN 1999) 42

52.223-3 HAZARDOUS MATERIAL IDENTIFICATION AND MATERIAL SAFETY DATA (JAN 1997) 43

52.223-6 DRUG-FREE WORKPLACE (MAR 2001) 45

52.223-14 TOXIC CHEMICAL RELEASE REPORTING (OCT 2000) 47

52.225-5 TRADE AGREEMENTS (APR 2000) 48

52.225-9 BUY AMERICAN ACT--BALANCE OF PAYMENTS PROGRAM—CONSTRUCTION MATERIALS (FEB 2000) 50

52.225-13 RESTRICTIONS ON CERTAIN FOREIGN PURCHASES (JUL 2000) 54

52.225-15 SANCTIONED EUROPEAN UNION COUNTRY END PRODUCTS (FEB 2000) 54

52.226-1 UTILIZATION OF INDIAN ORGANIZATIONS AND INDIAN-OWNED ECONOMIC ENTERPRISES (JUN 2000) 55

52.227-1 AUTHORIZATION AND CONSENT (JUL 1995) 56

52.227-2 NOTICE AND ASSISTANCE REGARDING PATENT AND COPYRIGHT INFRINGEMENT (AUG 1996) 57

52.227-4 PATENT INDEMNITY--CONSTRUCTION CONTRACTS (APR 1984) 57

52.228-1 BID GUARANTEE (SEP 1996) 58

52.228-2 ADDITIONAL BOND SECURITY (OCT 1997) 58

52.228-11 PLEDGES OF ASSETS (FEB 1992) 59

52.228-12 PROSPECTIVE SUBCONTRACTOR REQUESTS FOR BONDS. (OCT 1995) 59

52.228-14 IRREVOCABLE LETTER OF CREDIT (DEC 1999) 60

52.228-15 PERFORMANCE AND PAYMENT BONDS--CONSTRUCTION (JUL 2000)- 64

52.229-3 FEDERAL, STATE, AND LOCAL TAXES (JAN 1991) 65

52.229-5 TAXES--CONTRACTS PERFORMED IN U.S. POSSESSIONS OR PUERTO RICO (APR 1984) 66

52.232-5 PAYMENTS UNDER FIXED-PRICE CONSTRUCTION CONTRACTS (MAY 1997) 67

52.232-17 INTEREST (JUNE 1996) 70

52.232-23 ASSIGNMENT OF CLAIMS (JAN 1986) 70

52.232-27 PROMPT PAYMENT FOR CONSTRUCTION CONTRACTS (MAR 2001) 71

52.232-33 PAYMENT BY ELECTRONIC FUNDS TRANSFER—CENTRAL CONTRACTOR REGISTRATION (MAY 1999) 80

52.233-1 DISPUTES. (DEC 1998) 82

52.233-3 PROTEST AFTER AWARD (AUG. 1996) 84

52.236-2 DIFFERING SITE CONDITIONS (APR 1984) 85

52.236-3 SITE INVESTIGATION AND CONDITIONS AFFECTING THE WORK (APR 1984) 86

52.236-5 MATERIAL AND WORKMANSHIP (APR 1984) 86

52.236-6 SUPERINTENDENCE BY THE CONTRACTOR (APR 1984) 87

52.236-7 PERMITS AND RESPONSIBILITIES (NOV 1991) 87

52.236-8 OTHER CONTRACTS (APR 1984) 88

52.236-9 PROTECTION OF EXISTING VEGETATION, STRUCTURES, EQUIPMENT, UTILITIES, AND IMPROVEMENTS (APR 1984) 88

52.236-10 OPERATIONS AND STORAGE AREAS (APR 1984) 88

52.236-11 USE AND POSSESSION PRIOR TO COMPLETION (APR 1984) 89

52.236-12 CLEANING UP (APR 1984) 89

52.236-13 ACCIDENT PREVENTION (NOV 1991) – ALTERNATE I (NOV 1991) 90

52.236-15 SCHEDULES FOR CONSTRUCTION CONTRACTS (APR 1984) 91

52.236-21 SPECIFICATIONS AND DRAWINGS FOR CONSTRUCTION (FEB 1997) 92

52.236-26 PRECONSTRUCTION CONFERENCE (FEB 1995) 93

52.242-13 BANKRUPTCY (JUL 1995) 93

52.242-14 SUSPENSION OF WORK (APR 1984) 93

52.243-4 CHANGES (AUG 1987) 94

52.244-6 SUBCONTRACTS FOR COMMERCIAL ITEMS AND COMMERCIAL COMPONENTS (MAR 2001) 95

52.245-2 GOVERNMENT PROPERTY (FIXED-PRICE CONTRACTS) (DEC 1989) 96

52.245-4 GOVERNMENT-FURNISHED PROPERTY (SHORT FORM) (APR 1984) 100

52.246-12 INSPECTION OF CONSTRUCTION (AUG 1996) 101

52.246-13 INSPECTION--DISMANTLING, DEMOLITION, OR REMOVAL OF IMPROVEMENTS (AUG 1996) 102

52.248-3 VALUE ENGINEERING--CONSTRUCTION (FEB 2000) - ALTERNATE I (APR 1984) 102

52.249-1 TERMINATION FOR CONVENIENCE OF THE GOVERNMENT (FIXED-PRICE) (SHORT FORM) (APR 1984) 106

52.249-2 TERMINATION FOR CONVENIENCE OF THE GOVERNMENT (FIXED-PRICE) (SEP 1996) - ALTERNATE I (SEP 1996) 106

52.249-3 TERMINATION FOR CONVENIENCE OF THE GOVERNMENT (DISMANTLING, DEMOLITION, OR REMOVAL OF IMPROVEMENTS) (SEP 1996) 110

52.249-10 DEFAULT (FIXED-PRICE CONSTRUCTION) (APR 1984) 114

52.252-2 CLAUSES INCORPORATED BY REFERENCE (FEB 1998) 115

52.252-4 ALTERATIONS IN CONTRACT (APR 1984) 116

52.252-6 AUTHORIZED DEVIATIONS IN CLAUSES (APR 1984) 116

52.253-1 COMPUTER GENERATED FORMS (JAN 1991) 116

252.201-7000 CONTRACTING OFFICER'S REPRESENTATIVE (DEC 1991) 116

252.203-7001 PROHIBITION ON PERSONS CONVICTED OF FRAUD OR OTHER DEFENSE-CONTRACT-RELATED FELONIES (MAR 1999) 117

252.204-7004 REQUIRED CENTRAL CONTRACTOR REGISTRATION.(MAR 2000) 118

252.209-7004 SUBCONTRACTING WITH FIRMS THAT ARE OWNED OR CONTROLLED BY THE GOVERNMENT OF A TERRORIST COUNTRY (MAR 1998) 120

252.223-7001 HAZARD WARNING LABELS (DEC 1991) 120

252.223-7004 DRUG-FREE WORK FORCE (SEP 1988) 121

252.225-7031 SECONDARY ARAB BOYCOTT OF ISRAEL (JUN 1992) 123

252.227-7033 RIGHTS IN SHOP DRAWINGS (APR 1966) 123

252.231-7000 SUPPLEMENTAL COST PRINCIPLES (DEC 1991) 123

252.236-7000 MODIFICATION PROPOSALS - PRICE BREAKDOWN. (DEC 1991) 124

252.236-7008 CONTRACT PRICES - BIDDING SCHEDULES. (DEC 1991) 124

252.243-7001 PRICING OF CONTRACT MODIFICATIONS (DEC 1991) 125

252.247-7023 TRANSPORTATION OF SUPPLIES BY SEA (MAR 2000) 125

252.247-7024 NOTIFICATION OF TRANSPORTATION OF SUPPLIES BY SEA (MAR 2000) . 128

SECTION 00700
CONTRACT CLAUSES

CLAUSES INCORPORATED BY FULL TEXT

52.202-1 DEFINITIONS. (MAR 2001)

(a) Agency head or head of the agency means the Secretary (Attorney General, Administrator, Governor, Chairperson, or other chief official, as appropriate) of the agency, unless otherwise indicated, including any deputy or assistant chief official of the executive agency.

(b) Commercial component means any component that is a commercial item.

(c) Commercial item means--

(1) Any item, other than real property, that is of a type customarily used for nongovernmental purposes and that--

(i) Has been sold, leased, or licensed to the general public; or

(ii) Has been offered for sale, lease, or license to the general public;

(2) Any item that evolved from an item described in paragraph (c)(1) of this clause through advances in technology or performance and that is not yet available in the commercial marketplace, but will be available in the commercial marketplace in time to satisfy the delivery requirements under a Government solicitation;

(3) Any item that would satisfy a criterion expressed in paragraphs (c)(1) or (c)(2) of this clause, but for--

(i) Modifications of a type customarily available in the commercial marketplace; or

(ii) Minor modifications of a type not customarily available in the commercial marketplace made to meet Federal Government requirements. “Minor” modifications means modifications that do not significantly alter the nongovernmental function or essential physical characteristics of an item or component, or change the purpose of a process. Factors to be considered in determining whether a modification is minor include the value and size of the modification and the comparative value and size of the final product. Dollar values and percentages may be used as guideposts, but are not conclusive evidence that a modification is minor;

(4) Any combination of items meeting the requirements of paragraphs (c)(1), (2), (3), or (5) of this clause that are of a type customarily combined and sold in combination to the general public;

(5) Installation services, maintenance services, repair services, training services, and other services if such services are procured for support of an item referred to in paragraphs (c)(1), (2), (3), or (4) of this clause, and if the source of such services--

(i) Offers such services to the general public and the Federal Government contemporaneously and under similar terms and conditions; and

(ii) Offers to use the same work force for providing the Federal Government with such services as the source uses for providing such services to the general public;

(6) Services of a type offered and sold competitively in substantial quantities in the commercial marketplace based on established catalog or market prices for specific tasks performed under standard commercial terms and conditions. This does not include services that are sold based on hourly rates without an established catalog or market price for a specific service performed;

(7) Any item, combination of items, or service referred to in subparagraphs (c)(1) through (c)(6), notwithstanding the fact that the item, combination of items, or service is transferred between or among separate divisions, subsidiaries, or affiliates of a Contractor; or

(8) A nondevelopmental item, if the procuring agency determines the item was developed exclusively at private expense and sold in substantial quantities, on a competitive basis, to multiple State and local Governments.

(d) Component means any item supplied to the Government as part of an end item or of another component, except that for use in 52.225-9, and 52.225-11 see the definitions in 52.225-9(a) and 52.225-11(a).

(e) Contracting Officer means a person with the authority to enter into, administer, and/or terminate contracts and make related determinations and findings. The term includes certain authorized representatives of the Contracting Officer acting within the limits of their authority as delegated by the Contracting Officer.

(f) Nondevelopmental item means--

(1) Any previously developed item of supply used exclusively for governmental purposes by a Federal agency, a State or local government, or a foreign government with which the United States has a mutual defense cooperation agreement;

(2) Any item described in paragraph (f)(1) of this definition that requires only minor modification or modifications of a type customarily available in the commercial marketplace in order to meet the requirements of the procuring department or agency; or

(3) Any item of supply being produced that does not meet the requirements of paragraph (f)(1) or (f)(2) solely because the item is not yet in use.

(g) Except as otherwise provided in this contract, the term "subcontracts" includes, but is not limited to, purchase orders and changes and modifications to purchase orders under this contract.

(End of clause)

52.203-3 GRATUITIES (APR 1984)

(a) The right of the Contractor to proceed may be terminated by written notice if, after notice and hearing, the agency head or a designee determines that the Contractor, its agent, or another representative--

(1) Offered or gave a gratuity (e.g., an entertainment or gift) to an officer, official, or employee of the Government; and

(2) Intended, by the gratuity, to obtain a contract or favorable treatment under a contract.

(b) The facts supporting this determination may be reviewed by any court having lawful jurisdiction.

(c) If this contract is terminated under paragraph (a) of this clause, the Government is entitled--

(1) To pursue the same remedies as in a breach of the contract; and

(2) In addition to any other damages provided by law, to exemplary damages of not less than 3 nor more than 10 times the cost incurred by the Contractor in giving gratuities to the person concerned, as determined by the agency head or a designee. (This subparagraph (c)(2) is applicable only if this contract uses money appropriated to the Department of Defense.)

(d) The rights and remedies of the Government provided in this clause shall not be exclusive and are in addition to any other rights and remedies provided by law or under this contract.

(End of clause)

52.203-5 COVENANT AGAINST CONTINGENT FEES (APR 1984)

(a) The Contractor warrants that no person or agency has been employed or retained to solicit or obtain this contract upon an agreement or understanding for a contingent fee, except a bona fide employee or agency. For breach or violation of this warranty, the Government shall have the right to annul this contract without liability or, in its discretion, to deduct from the contract price or consideration, or otherwise recover, the full amount of the contingent fee.

(b) "Bona fide agency," as used in this clause, means an established commercial or selling agency, maintained by a contractor for the purpose of securing business, that neither exerts nor proposes to exert improper influence to solicit or obtain Government contracts nor holds itself out as being able to obtain any Government contract or contracts through improper influence.

"Bona fide employee," as used in this clause, means a person, employed by a contractor and subject to the contractor's supervision and control as to time, place, and manner of performance, who neither exerts nor proposes to exert improper influence to solicit or obtain Government contracts nor holds out as being able to obtain any Government contract or contracts through improper influence.

"Contingent fee," as used in this clause, means any commission, percentage, brokerage, or other fee that is contingent upon the success that a person or concern has in securing a Government contract.

"Improper influence," as used in this clause, means any influence that induces or tends to induce a Government employee or officer to give consideration or to act regarding a Government contract on any basis other than the merits of the matter.

(End of clause)

52.203-7 ANTI-KICKBACK PROCEDURES. (JUL 1995)

(a) Definitions.

"Kickback," as used in this clause, means any money, fee, commission, credit, gift, gratuity, thing of value, or compensation of any kind which is provided, directly or indirectly, to any prime Contractor, prime Contractor employee, subcontractor, or subcontractor employee for the purpose of improperly obtaining or rewarding favorable treatment in connection with a prime contract or in connection with a subcontract relating to a prime contract.

"Person," as used in this clause, means a corporation, partnership, business association of any kind, trust, joint-stock company, or individual.

"Prime contract," as used in this clause, means a contract or contractual action entered into by the United States for the purpose of obtaining supplies, materials, equipment, or services of any kind.

"Prime Contractor," as used in this clause, means a person who has entered into a prime contract with the United States.

"Prime Contractor employee," as used in this clause, means any officer, partner, employee, or agent of a prime Contractor.

"Subcontract," as used in this clause, means a contract or contractual action entered into by a prime Contractor or subcontractor for the purpose of obtaining supplies, materials, equipment, or services of any kind under a prime contract.

"Subcontractor," as used in this clause, (1) means any person, other than the prime Contractor, who offers to furnish or furnishes any supplies, materials, equipment, or services of any kind under a prime contract or a subcontract entered into in connection with such prime contract, and (2) includes any person who offers to furnish or furnishes general supplies to the prime Contractor or a higher tier subcontractor.

"Subcontractor employee," as used in this clause, means any officer, partner, employee, or agent of a subcontractor.

(b) The Anti-Kickback Act of 1986 (41 U.S.C. 51-58) (the Act), prohibits any person from -

(1) Providing or attempting to provide or offering to provide any kickback;

(2) Soliciting, accepting, or attempting to accept any kickback; or

(3) Including, directly or indirectly, the amount of any kickback in the contract price charged by a prime Contractor to the United States or in the contract price charged by a subcontractor to a prime Contractor or higher tier subcontractor.

(c)(1) The Contractor shall have in place and follow reasonable procedures designed to prevent and detect possible violations described in paragraph (b) of this clause in its own operations and direct business relationships.

(2) When the Contractor has reasonable grounds to believe that a violation described in paragraph (b) of this clause may have occurred, the Contractor shall promptly report in writing the possible violation. Such reports shall be made to the inspector general of the contracting agency, the head of the contracting agency if the agency does not have an inspector general, or the Department of Justice.

(3) The Contractor shall cooperate fully with any Federal agency investigating a possible violation described in paragraph (b) of this clause.

(4) The Contracting Officer may (i) offset the amount of the kickback against any monies owed by the United States under the prime contract and/or (ii) direct that the Prime Contractor withhold, from sums owed a subcontractor under the prime contract, the amount of any kickback. The Contracting Officer may order the monies withheld under subdivision (c)(4)(ii) of this clause be paid over to the Government unless the Government has already offset those monies under subdivision (c)(4)(i) of this clause. In either case, the Prime Contractor shall notify the Contracting Officer when the monies are withheld.

(5) The Contractor agrees to incorporate the substance of this clause, including this subparagraph (c)(5) but excepting subparagraph (c)(1), in all subcontracts under this contract which exceed $100,000.

52.203-8 CANCELLATION, RESCISSION, AND RECOVERY OF FUNDS FOR ILLEGAL OR IMPROPER ACTIVITY (JAN 1997)

(a) If the Government receives information that a contractor or a person has engaged in conduct constituting a violation of subsection (a), (b), (c), or (d) of Section 27 of the Office of Federal Procurement Policy Act (41 U.S.C. 423) (the Act), as amended by section 4304 of the 1996 National Defense Authorization Act for Fiscal Year 1996 (Pub. L. 104-106), the Government may--

(1) Cancel the solicitation, if the contract has not yet been awarded or issued; or

(2) Rescind the contract with respect to which--

(i) The Contractor or someone acting for the Contractor has been convicted for an offense where the conduct constitutes a violation of subsection 27 (a) or (b) of the Act for the purpose of either--

(A) Exchanging the information covered by such subsections for anything of value; or

(B) Obtaining or giving anyone a competitive advantage in the award of a Federal agency procurement contract; or

(ii) The head of the contracting activity has determined, based upon a preponderance of the evidence, that the Contractor or someone acting for the Contractor has engaged in conduct constituting an offense punishable under subsections 27(e)(1) of the Act.

(b) If the Government rescinds the contract under paragraph (a) of this clause, the Government is entitled to recover, in addition to any penalty prescribed by law, the amount expended under the contract.

(c) The rights and remedies of the Government specified herein are not exclusive, and are

in addition to any other rights and remedies provided by law, regulation, or under this contract.

52.203-10 PRICE OR FEE ADJUSTMENT FOR ILLEGAL OR IMPROPER ACTIVITY (JAN 1997)

(a) The Government, at its election, may reduce the price of a fixed-price type contract and the total cost and fee under a cost-type contract by the amount of profit or fee determined as set forth in paragraph (b) of this clause if the head of the contracting activity or designee determines that there was a violation of subsection 27 (a), (b), or (c) of the Office of Federal Procurement Policy Act, as amended (41 U.S.C. 423), as implemented in section 3.104 of the Federal Acquisition Regulation.

(b) The price or fee reduction referred to in paragraph (a) of this clause shall be--

(1) For cost-plus-fixed-fee contracts, the amount of the fee specified in the contract at the time of award;

(2) For cost-plus-incentive-fee contracts, the target fee specified in the contract at the time of award, notwithstanding any minimum fee or "fee floor" specified in the contract;

(3) For cost-plus-award-fee contracts--

(i) The base fee established in the contract at the time of contract award;

(ii) If no base fee is specified in the contract, 30 percent of the amount of each award fee otherwise payable to the Contractor for each award fee evaluation period or at each award fee determination point.

(4) For fixed-price-incentive contracts, the Government may--

(i) Reduce the contract target price and contract target profit both by an amount equal to the initial target profit specified in the contract at the time of contract award; or

(ii) If an immediate adjustment to the contract target price and contract target profit would have a significant adverse impact on the incentive price revision relationship under the contract, or adversely affect the contract financing provisions, the Contracting Officer may defer such adjustment until establishment of the total final price of the contract. The total final price established in accordance with the incentive price revision provisions of the contract shall be reduced by an amount equal to the initial target profit specified in the contract at the time of contract award and such reduced price shall be the total final contract price.

(5) For firm-fixed-price contracts, by 10 percent of the initial contract price or a profit amount determined by the Contracting Officer from records or documents in existence

prior to the date of the contract award.

(c) The Government may, at its election, reduce a prime contractor's price or fee in accordance with the procedures of paragraph (b) of this clause for violations of the Act by its subcontractors by an amount not to exceed the amount of profit or fee reflected in the subcontract at the time the subcontract was first definitively priced.

(d) In addition to the remedies in paragraphs (a) and (c) of this clause, the Government may terminate this contract for default. The rights and remedies of the Government specified herein are not exclusive, and are in addition to any other rights and remedies provided by law or under this contract.

(End of clause)

52.203-12 LIMITATION ON PAYMENTS TO INFLUENCE CERTAIN FEDERAL TRANSACTIONS (JUN 1997)

(a) Definitions.

"Agency," as used in this clause, means executive agency as defined in 2.101.

"Covered Federal action," as used in this clause, means any of the following Federal actions:

(1) The awarding of any Federal contract.

(2) The making of any Federal grant.

(3) The making of any Federal loan.

(4) The entering into of any cooperative agreement.

(5) The extension, continuation, renewal, amendment, or modification of any Federal contract, grant, loan, or cooperative agreement.

"Indian tribe" and "tribal organization," as used in this clause, have the meaning provided in section 4 of the Indian Self-Determination and Education Assistance Act (25 U.S.C. 450B) and include Alaskan Natives.

"Influencing or attempting to influence," as used in this clause, means making, with the intent to influence, any communication to or appearance before an officer or employee of any agency, a Member of Congress, an officer or employee of Congress, or an employee of a Member of Congress in connection with any covered Federal action.

"Local government," as used in this clause, means a unit of government in a State and, if chartered, established, or otherwise recognized by a State for the performance of a governmental duty, including a local public authority, a special district, an intrastate district, a council of governments, a sponsor group representative organization, and any other instrumentality of a local government.

"Officer or employee of an agency," as used in this clause, includes the following individuals who are employed by an agency:

(1) An individual who is appointed to a position in the Government under title 5, United States Code, including a position under a temporary appointment.

(2) A member of the uniformed services, as defined in subsection 101(3), title 37, United States Code.

(3) A special Government employee, as defined in section 202, title 18, United States Code.

(4) An individual who is a member of a Federal advisory committee, as defined by the Federal Advisory Committee Act, title 5, United States Code, appendix 2.

"Person," as used in this clause, means an individual, corporation, company, association, authority, firm, partnership, society, State, and local government, regardless of whether such entity is operated for profit, or not for profit. This term excludes an Indian tribe, tribal organization, or any other Indian organization with respect to expenditures specifically permitted by other Federal law.

"Reasonable compensation," as used in this clause, means, with respect to a regularly employed officer or employee of any person, compensation that is consistent with the normal compensation for such officer or employee for work that is not furnished to, not funded by, or not furnished in cooperation with the Federal Government.

"Reasonable payment," as used in this clause, means, with respect to professional and other technical services, a payment in an amount that is consistent with the amount normally paid for such services in the private sector.

"Recipient," as used in this clause, includes the Contractor and all subcontractors. This term excludes an Indian tribe, tribal organization, or any other Indian organization with respect to expenditures specifically permitted by other Federal law.

"Regularly employed," as used in this clause, means, with respect to an officer or employee of a person requesting or receiving a Federal contract, an officer or employee who is employed by such person for at least 130 working days within 1 year immediately preceding the date of the submission that initiates agency consideration of such person for receipt of such contract. An officer or employee who is employed by such person for less than 130 working days within 1 year immediately preceding the date of the

submission that initiates agency consideration of such person shall be considered to be regularly employed as soon as he or she is employed by such person for 130 working days.

"State," as used in this clause, means a State of the United States, the District of Columbia, the Commonwealth of Puerto Rico, a territory or possession of the United States, an agency or instrumentality of a State, and multi-State, regional, or interstate entity having governmental duties and powers.

(b) Prohibitions.

(1) Section 1352 of title 31, United States Code, among other things, prohibits a recipient of a Federal contract, grant, loan, or cooperative agreement from using appropriated funds to pay any person for influencing or attempting to influence an officer or employee of any agency, a Member of Congress, an officer or employee of Congress, or an employee of a Member of Congress in connection with any of the following covered Federal actions: the awarding of any Federal contract; the making of any Federal grant; the making of any Federal loan; the entering into of any cooperative agreement; or the modification of any Federal contract, grant, loan, or cooperative agreement.

(2) The Act also requires Contractors to furnish a disclosure if any funds other than Federal appropriated funds (including profit or fee received under a covered Federal transaction) have been paid, or will be paid, to any person for influencing or attempting to influence an officer or employee of any agency, a Member of Congress, an officer or employee of Congress, or an employee of a Member of Congress in connection with a Federal contract, grant, loan, or cooperative agreement.

(3) The prohibitions of the Act do not apply under the following conditions:

(i) Agency and legislative liaison by own employees.

(A) The prohibition on the use of appropriated funds, in subparagraph (b)(1) of this clause, does not apply in the case of a payment of reasonable compensation made to an officer or employee of a person requesting or receiving a covered Federal action if the payment is for agency and legislative liaison activities not directly related to a covered Federal action.

(B) For purposes of subdivision (b)(3)(i)(A) of this clause, providing any information specifically requested by an agency or Congress is permitted at any time.

(C) The following agency and legislative liaison activities are permitted at any time where they are not related to a specific solicitation for any covered Federal action:

(1) Discussing with an agency the qualities and characteristics (including individual demonstrations) of the person's products or services, conditions or terms of sale, and service capabilities.

(2) Technical discussions and other activities regarding the application or adaptation of theperson's products or services for an agency's use.

(D) The following agency and legislative liaison activities are permitted where they are prior to formal solicitation of any covered Federal action--

(1) Providing any information not specifically requested but necessary for an agency to make an informed decision about initiation of a covered Federal action;

(2) Technical discussions regarding the preparation of an unsolicited proposal prior to its official submission; and

(3) Capability presentations by persons seeking awards from an agency pursuant to the provisions of the Small Business Act, as amended by Pub. L. 95-507, and subsequent amendments.

(E) Only those services expressly authorized by subdivision (b)(3)(i)(A) of this clause are permitted under this clause.

(ii) Professional and technical services.

(A) The prohibition on the use of appropriated funds, in subparagraph (b)(1) of this clause, does not apply in the case of--

(1) A payment of reasonable compensation made to an officer or employee of a person requesting or receiving a covered Federal action or an extension, continuation, renewal, amendment, or modification of a covered Federal action, if payment is for professional or technical services rendered directly in the preparation, submission, or negotiation of any bid, proposal, or application for that Federal action or for meeting requirements imposed by or pursuant to law as a condition for receiving that Federal action.

(2) Any reasonable payment to a person, other than an officer or employee of a person requesting or receiving a covered Federal action or an extension, continuation, renewal, amendment, or modification of a covered Federal action if the payment is for professional or technical services rendered directly in the preparation, submission, or negotiation of any bid, proposal, or application for that Federal action or for meeting requirements imposed by or pursuant to law as a condition for receiving that Federal action. Persons other than officers or employees of a person requesting or receiving a covered Federal action include consultants and trade associations.

(B) For purposes of subdivision (b)(3)(ii)(A) of this clause, "professional and technical services" shall be limited to advice and analysis directly applying any professional or technical discipline. For example, drafting of a legal document accompanying a bid or proposal by a lawyer is allowable. Similarly, technical advice provided by an engineer on the performance or operational capability of a piece of equipment rendered directly in the

negotiation of a contract is allowable. However, communications with the intent to influence made by a professional (such as a licensed lawyer) or a technical person (such as a licensed accountant) are not allowable under this section unless they provide advice and analysis directly applying their professional or technical expertise and unless the advice or analysis is rendered directly and solely in the preparation, submission or negotiation of a covered Federal action. Thus, for example, communications with the intent to influence made by a lawyer that do not provide legal advice or analysis directly and solely related to the legal aspects of his or her client's proposal, but generally advocate one proposal over another are not allowable under this section because the lawyer is not providing professional legal services. Similarly, communications with the intent to influence made by an engineer providing an engineering analysis prior to the preparation or submission of a bid or proposal are not allowable under this section since the engineer is providing technical services but not directly in the preparation, submission or negotiation of a covered Federal action.

(C) Requirements imposed by or pursuant to law as a condition for receiving a covered Federal award include those required by law or regulation and any other requirements in the actual award documents.

(D) Only those services expressly authorized by subdivisions (b)(3)(ii)(A)(1) and (2) of this clause are permitted under this clause.

(E) The reporting requirements of FAR 3.803(a) shall not apply with respect to payments of reasonable compensation made to regularly employed officers or employees of a person.

(c) Disclosure.

(1) The Contractor who requests or receives from an agency a Federal contract shall file with that agency a disclosure form, OMB standard form LLL, Disclosure of Lobbying Activities, if such person has made or has agreed to make any payment using nonappropriated funds (to include profits from any covered Federal action), which would be prohibited under subparagraph (b)(1) of this clause, if paid for with appropriated funds.

(2) The Contractor shall file a disclosure form at the end of each calendar quarter in which there occurs any event that materially affects the accuracy of the information contained in any disclosure form previously filed by such person under subparagraph (c)(1) of this clause. An event that materially affects the accuracy of the information reported includes--

(i) A cumulative increase of $25,000 or more in the amount paid or expected to be paid for influencing or attempting to influence a covered Federal action; or

(ii) A change in the person(s) or individual(s) influencing or attempting to influence a covered Federal action; or

(iii) A change in the officer(s), employee(s), or Member(s) contacted to influence or attempt to influence a covered Federal action.

(3) The Contractor shall require the submittal of a certification, and if required, a disclosure form by any person who requests or receives any subcontract exceeding $100,000 under the Federal contract.

(4) All subcontractor disclosure forms (but not certifications) shall be forwarded from tier to tier until received by the prime Contractor. The prime Contractor shall submit all disclosures to the Contracting Officer at the end of the calendar quarter in which the disclosure form is submitted by the subcontractor. Each subcontractor certification shall be retained in the subcontract file of the awarding Contractor.

(d) Agreement. The Contractor agrees not to make any payment prohibited by this clause.

(e) Penalties.

(1) Any person who makes an expenditure prohibited under paragraph (a) of this clause or who fails to file or amend the disclosure form to be filed or amended by paragraph (b) of this clause shall be subject to civil penalties as provided for by 31 U.S.C. 1352. An imposition of a civil penalty does not prevent the Government from seeking any other remedy that may be applicable.

(2) Contractors may rely without liability on the representation made by their subcontractors in the certification and disclosure form.

(f) Cost allowability. Nothing in this clause makes allowable or reasonable any costs which would otherwise be unallowable or unreasonable. Conversely, costs made specifically unallowable by the requirements in this clause will not be made allowable under any other provision.

(End of clause)

52.204-4 PRINTED OR COPIED DOUBLE-SIDED ON RECYCLED PAPER (AUG 2000)

(a) Definitions. As used in this clause--

Postconsumer material means a material or finished product that has served its intended use and has been discarded for disposal or recovery, having completed its life as a consumer item. Postconsumer material is a part of the broader category of “recovered material.” For paper and paper products, postconsumer material means “postconsumer fiber” defined by the U.S. Environmental Protection Agency (EPA) as--

(1) Paper, paperboard, and fibrous materials from retail stores, office buildings, homes, and so forth, after they have passed through their end-usage as a consumer item, including: used corrugated boxes; old newspapers; old magazines; mixed waste paper; tabulating cards; and used cordage; or

(2) All paper, paperboard, and fibrous materials that enter and are collected from municipal solid waste; but not

(3) Fiber derived from printers' over-runs, converters' scrap, and over-issue publications.

Printed or copied double-sided means printing or reproducing a document so that information is on both sides of a sheet of paper.

Recovered material, for paper and paper products, is defined by EPA in its Comprehensive Procurement Guideline as “recovered fiber” and means the following materials:

(1) Postconsumer fiber; and

(2) Manufacturing wastes such as--

(i) Dry paper and paperboard waste generated after completion of the papermaking process (that is, those manufacturing operations up to and including the cutting and trimming of the paper machine reel into smaller rolls or rough sheets) including: envelope cuttings, bindery trimmings, and other paper and paperboard waste resulting from printing, cutting, forming, and other converting operations; bag, box, and carton manufacturing wastes; and butt rolls, mill wrappers, and rejected unused stock; and

(ii) Repulped finished paper and paperboard from obsolete inventories of paper and paperboard manufacturers, merchants, wholesalers, dealers, printers, converters, or others.

(b) In accordance with Section 101 of Executive Order 13101 of September 14, 1998, Greening the Government through Waste Prevention, Recycling, and Federal Acquisition, the Contractor is encouraged to submit paper documents, such as offers, letters, or reports, that are printed or copied double-sided on recycled paper that meet minimum content standards specified in Section 505 of Executive Order 13101, when not using electronic commerce methods to submit information or data to the Government.

(c) If the Contractor cannot purchase high-speed copier paper, offset paper, forms bond, computer printout paper, carbonless paper, file folders, white wove envelopes, writing and office paper, book paper, cotton fiber paper, and cover stock meeting the 30 percent postconsumer material standard for use in submitting paper documents to the Government, it should use paper containing no less than 20 percent postconsumer material. This lesser standard should be used only when paper meeting the 30 percent

postconsumer material standard is not obtainable at a reasonable price or does not meet reasonable performance standards.

(End of clause)

52.209-6 PROTECTING THE GOVERNMENT'S INTEREST WHEN SUBCONTRACTING WITH CONTRACTORS DEBARRED, SUSPENDED, OR PROPOSED FOR DEBARMENT (JUL 1995)

(a) The Government suspends or debars Contractors to protect the Government's interests. The Contractor shall not enter into any subcontract in excess of the $25,000 with a Contractor that is debarred, suspended, or proposed for debarment unless there is a compelling reason to do so.

(b) The Contractor shall require each proposed first-tier subcontractor, whose subcontract will exceed $25,000, to disclose to the Contractor, in writing, whether as of the time of award of the subcontract, the subcontractor, or its principles, is or is not debarred, suspended, or proposed for debarment by the Federal Government.

(c) A corporate officer or a designee of the Contractor shall notify the Contracting Officer, in writing, before entering into a subcontract with a party that is debarred, suspended, or proposed for debarment (see FAR 9.404 for information on the List of Parties Excluded from Federal Procurement and Nonprocurement Programs). The notice must include the following:

(1) The name of the subcontractor.

(2) The Contractor's knowledge of the reasons for the subcontractor being on the List of Parties Excluded from Federal Procurement and Nonprocurement Programs.

(3) The compelling reason(s) for doing business with the subcontractor notwithstanding its inclusion on the List of Parties Excluded from Federal Procurement and Nonprocurement Programs.

(4) The systems and procedures the Contractor has established to ensure that it is fully protecting the Government's interests when dealing with such subcontractor in view of the specific basis for the party's debarment, suspension, or proposed debarment.

(End of clause)

52.211-18 VARIATION IN ESTIMATED QUANTITY (APR 1984)

If the quantity of a unit-priced item in this contract is an estimated quantity and the actual quantity of the unit-priced item varies more than 15 percent above or below the estimated

quantity, an equitable adjustment in the contract price shall be made upon demand of either party. The equitable adjustment shall be based upon any increase or decrease in costs due solely to the variation above 115 percent or below 85 percent of the estimated quantity. If the quantity variation is such as to cause an increase in the time necessary for completion, the Contractor may request, in writing, an extension of time, to be received by the Contracting Officer within 10 days from the beginning of the delay, or within such further period as may be granted by the Contracting Officer before the date of final settlement of the contract. Upon the receipt of a written request for an extension, the Contracting Officer shall ascertain the facts and make an adjustment for extending the completion date as, in the judgement of the Contracting Officer, is justified.

52.214-26 AUDIT AND RECORDS--SEALED BIDDING. (OCT 1997)

(a) As used in this clause, records includes books, documents, accounting procedures and practices, and other data, regardless of type and regardless of whether such items are in written form, in the form of computer data, or in any other form.

(b) Cost or pricing data. If the Contractor has been required to submit cost or pricing data in connection with the pricing of any modification to this contract, the Contracting Officer, or an authorized representative of the Contracting Officer, in order to evaluate the accuracy, completeness, and currency of the cost or pricing data, shall have the right to examine and audit all of the Contractor's records, including computations and projections, related to--

(1) The proposal for the modification;

(2) The discussions conducted on the proposal(s), including those related to negotiating;

(3) Pricing of the modification; or

(4) Performance of the modification.

(c) Comptroller General. In the case of pricing any modification, the Comptroller General of the United States, or an authorized representative, shall have the same rights as specified in paragraph (b) of this clause.

(d) Availability. The Contractor shall make available at its office at all reasonable times the materials described in reproduction, until 3 years after final payment under this contract, or for any other period specified in Subpart 4.7 of the Federal Acquisition Regulation (FAR). FAR Subpart 4.7, Contractor Records Retention, in effect on the data of this contract, is incorporated by reference in its entirety and made a part of this contract.

(1) If this contract is completely or partially terminated, the records relating to the work terminated shall be made available for 3 years after any resulting final termination settlement.

(2) Records pertaining to appeals under the Disputes clause or to litigation or the settlement of claims arising under or relating to the performance of this contract shall be made available until disposition of such appeals, litigation, or claims.

(e) The Contractor shall insert a clause containing all the provisions of this clause, including this paragraph (e), in all subcontracts expected to exceed the threshold in FAR 15.403-4(a)(1) for submission of cost or pricing data.

52.214-27 PRICE REDUCTION FOR DEFECTIVE COST OR PRICING DATA - MODIFICATIONS - SEALED BIDDING. (OCT 1997)

(a) This clause shall become operative only for any modification to this contract involving aggregate increases and/or decreases in costs, plus applicable profits, expected to exceed the threshold for the submission of cost or pricing data at FAR 15.403-4(a)(1), except that this clause does not apply to a modification if an exception under FAR 15.403-1(b) applies.

(1) Based on adequate price competition;

(2) Based on established catalog or market prices of commercial items sold in substantial quantities to the general public; or

(3) Set by law or regulation.

(b) If any price, including profit, negotiated in connection with any modification under this clause, was increased by any significant amount because

(1) the Contractor or a subcontractor furnished cost or pricing data that were not complete, accurate, and current as certified in its Certificate of Current Cost or Pricing Data;

(2) a subcontractor or prospective subcontractor furnished the Contractor cost or pricing data that were not complete, accurate, and current as certified in the Contractor's Certificate of Current Cost or Pricing Data; or

(3) any of these parties furnished data of any description that were not accurate, the price shall be reduced accordingly and the contract shall be modified to reflect the reduction. This right to a price reduction is limited to that resulting from defects in data relating to modifications for which this clause becomes operative under paragraph (a) above.

(c) Any reduction in the contract price under paragraph (b) above due to defective data from a prospective subcontractor that was not subsequently awarded the subcontract shall be limited to the amount, plus applicable overhead and profit markup, by which:

(1) the actual subcontract; or

(2) the actual cost to the Contractor, if there was no subcontract, was less than the prospective subcontract cost estimate submitted by the Contractor; provided, that the actual subcontract price was not itself affected by defective cost or pricing data.

(d) If the Contracting Officer determines under paragraph (b) of this clause that a price or cost reduction should be made:

(1) the Contractor agrees not to raise the following matters as a defense:

(i) The Contractor or subcontractor was a sole source supplier or otherwise was in a superior bargaining position and thus the price of the contract would not have been modified even if accurate, complete, and current cost or pricing data had been submitted;

(ii) The Contracting Officer should have known that the cost or pricing data in issue were defective even though the Contractor or subcontractor took no affirmative action to bring the character of the data to the attention of the Contracting Officer;

(iii) The contract was based on an agreement about the total cost of the contract and there was no agreement about the cost of each item procured under the contract; or

(iv) The Contractor or subcontractor did not submit a Certificate of Current Cost or Pricing Data.

(2) Except as prohibited by subdivision (d)(2)(ii) of this clause:

(i) an offset in an amount determined appropriate by the Contracting Officer based upon the facts shall be allowed against the amount of a contract price reduction if:

(A) The Contractor certifies to the Contracting Officer that, to the best of the Contractor's knowledge and belief, the Contractor is entitled to the offset in the amount requested; and

(B) The Contractor proves that the cost or pricing data were available before the date of agreement on the price of the contract (or price of the modification) and that the data were not submitted before such date.

(ii) An offset shall not be allowed if:

(A) The understated data was known by the Contractor to be understated when the Certificate of Current Cost or Pricing Data was signed; or (B) The Government proves that the facts demonstrate that the contract price would not have increased in the amount

to be offset even if the available data had been submitted before the date of agreement on price.

(e) If any reduction in the contract price under this clause reduces the price of items for which payment was made prior to the date of the modification reflecting the price reduction, the Contractor shall be liable to and shall pay the United States at the time such overpayment is repaid:

(1) Simple interest on the amount of such overpayment to be computed from the date(s) of overpayment to the Contractor to the date the Government is repaid by the Contractor at the applicable underpayment rate effective for each quarter prescribed by the Secretary of the Treasury under 26 U.S.C. 6621(a)(2); and

(2) A penalty equal to the amount of the overpayment, if the Contractor or subcontractor knowingly submitted cost or pricing data which were incomplete, inaccurate, or noncurrent.

52.214-28 SUBCONTRACTOR COST OR PRICING DATA - MODIFICATIONS - SEALED BIDDING. (OCT 1997)

(a) The requirements of paragraphs (b) and (c) of this clause shall:

(1) become operative only for any modification to this contract involving aggregate increases and/or decreases in costs, plus applicable profits, expected to exceed the threshold for submission of cost or pricing data at (FAR) 48 CFR 15.403-4(a)(1); and

(2) be limited to such modifications.

(b) Before awarding any subcontract expected to exceed the threshold for submission of cost or pricing data at FAR 15.403-4(a)(1), on the date of agreement on price or the date of award, whichever is later; or before pricing any subcontract modifications involving aggregate increases and/or decreases in costs, plus applicable profits, expected to exceed the threshold for submission of cost or pricing data at FAR 15.403-4(a)(1), the Contractor shall require the subcontractor to submit cost or pricing data (actually or by specific identification in writing), unless an exception under FAR 15.403-1(b) applies.

(1) Based on adequate price competition;

(2) Based on established catalog or market prices of commercial items sold in substantial quantities to the general public; or

(3) Set by law or regulation.

(c) The Contractor shall require the subcontractor to certify in substantially the form prescribed in subsection 15.406-2 of the Federal Acquisition Regulation that, to the best

of its knowledge and belief, the data submitted under paragraph (b) above were accurate, complete, and current as of the date of agreement on the negotiated price of the subcontract or subcontract modification.

(d) The Contractor shall insert the substance of this clause, including this paragraph (d), in each subcontract that, when entered into, exceeds the threshold for submission of cost or pricing data at FAR 15.403-4(a)(1).

52.214-29 ORDER OF PRECEDENCE--SEALED BIDDING (JAN 1986)

Any inconsistency in this solicitation or contract shall be resolved by giving precedence in the following order: (a) the Schedule (excluding the specifications); (b) representations and other instructions; (c) contract clauses; (d) other documents, exhibits, and attachments; and (e) the specifications.

(End of clause)

52.219-8 UTILIZATION OF SMALL BUSINESS CONCERNS (OCT 2000)

(a) It is the policy of the United States that small business concerns, veteran-owned small business concerns, service-disabled veteran-owned small business concerns, HUBZone small business concerns, small disadvantaged business concerns, and women-owned small business concerns shall have the maximum practicable opportunity to participate in performing contracts let by any Federal agency, including contracts and subcontracts for subsystems, assemblies, components, and related services for major systems. It is further the policy of the United States that its prime contractors establish procedures to ensure the timely payment of amounts due pursuant to the terms of their subcontracts with small business concerns, veteran-owned small business concerns, service-disabled veteran-owned small business concerns, HUBZone small business concerns, small disadvantaged business concerns, and women-owned small business concerns.

(b) The Contractor hereby agrees to carry out this policy in the awarding of subcontracts to the fullest extent consistent with efficient contract performance. The Contractor further agrees to cooperate in any studies or surveys as may be conducted by the United States Small Business Administration or the awarding agency of the United States as may be necessary to determine the extent of the Contractor's compliance with this clause.

Definitions. As used in this contract--

HUBZone small business concern means a small business concern that appears on the List of Qualified HUBZone Small Business Concerns maintained by the Small Business Administration.

Service-disabled veteran-owned small business concern--

(1) Means a small business concern--

(i) Not less than 51 percent of which is owned by one or more service-disabled veterans or, in the case of any publicly owned business, not less than 51 percent of the stock of which is owned by one or more service-disabled veterans; and

(ii) The management and daily business operations of which are controlled by one or more service-disabled veterans or, in the case of a veteran with permanent and severe disability, the spouse or permanent caregiver of such veteran.

(2) Service-disabled veteran means a veteran, as defined in 38 U.S.C. 101(2), with a disability that is service-connected, as defined in 38 U.S.C. 101(16).

Small business concern means a small business as defined pursuant to Section 3 of the Small Business Act and relevant regulations promulgated pursuant thereto.

Small disadvantaged business concern means a small business concern that represents, as part of its offer that--

(1) It has received certification as a small disadvantaged business concern consistent with 13 CFR part 124, subpart B;

(2) No material change in disadvantaged ownership and control has occurred since its certification;

(3) Where the concern is owned by one or more individuals, the net worth of each individual upon whom the certification is based does not exceed $750,000 after taking into account the applicable exclusions set forth at 13 CFR 124.104(c)(2); and

(4) It is identified, on the date of its representation, as a certified small disadvantaged business in the database maintained by the Small Business Administration (PRO-Net).

Veteran-owned small business concern means a small business concern--

(1) Not less than 51 percent of which is owned by one or more veterans (as defined at 38 U.S.C. 101(2)) or, in the case of any publicly owned business, not less than 51 percent of the stock of which is owned by one or more veterans; and

(2) The management and daily business operations of which are controlled by one or more veterans.

Women-owned small business concern means a small business concern--

(1) That is at least 51 percent owned by one or more women, or, in the case of any publicly owned business, at least 51 percent of the stock of which is owned by one or more women; and

(2) Whose management and daily business operations are controlled by one or more women.

(d) Contractors acting in good faith may rely on written representations by their subcontractors regarding their status as a small business concern, a veteran-owned small business concern, a service-disabled veteran-owned small business concern, a HUBZone small business concern, a small disadvantaged business concern, or a women-owned small business concern.

(End of clause)

52.222-3 CONVICT LABOR (AUG 1996)

The Contractor agrees not to employ in the performance of this contract any person undergoing a sentence of imprisonment which has been imposed by any court of a State, the District of Columbia, the Commonwealth of Puerto Rico, the Virgin Islands, Guam, American Samoa, the Commonwealth of the Northern Mariana Islands, or the Trust Territory of the Pacific Islands. This limitation, however, shall not prohibit the employment by the Contractor in the performance of this contract of persons on parole or probation to work at paid employment during the term of their sentence or persons who have been pardoned or who have served their terms. Nor shall it prohibit the employment by the Contractor in the performance of this contract of persons confined for violation of the laws of any of the States, the District of Columbia, the Commonwealth of Puerto Rico, the Virgin Islands, Guam, American Samoa, the Commonwealth of the Northern Mariana Islands, or the Trust Territory of the Pacific Islands who are authorized to work at paid employment in the community under the laws of such jurisdiction, if--

(a)(1) The worker is paid or is in an approved work training program on a voluntary basis;

(2) Representatives of local union central bodies or similar labor union organizations have been consulted;

(3) Such paid employment will not result in the displacement of employed workers, or be applied in skills, crafts, or trades in which there is a surplus of available gainful labor in the locality, or impair existing contracts for services; and

(4) The rates of pay and other conditions of employment will not be less than those paid or provided for work of a similar nature in the locality in which the work is being performed; and

(b) The Attorney General of the United States has certified that the work-release laws or regulations of the jurisdiction involved are in conformity with the requirements of Executive Order 11755, as amended by Executive Orders 12608 and 12943.

(End of clause)

52.222-4 CONTRACT WORK HOURS AND SAFETY STANDARDS ACT - OVERTIME COMPENSATION. (SEP 2000)

(a) Overtime requirements. No Contractor or subcontractor employing laborers or mechanics (see Federal Acquisition Regulation 22.300) shall require or permit them to work over 40 hours in any workweek unless they are paid at least 1 and 1/2 times the basic rate of pay for each hour worked over 40 hours.

(b) Violation; liability for unpaid wages; liquidated damages. The responsible Contractor and subcontractor are liable for unpaid wages if they violate the terms in paragraph (a) of this clause. In addition, the Contractor and subcontractor are liable for liquidated damages payable to the Government. The Contracting Officer will assess liquidated damages at the rate of $10 per affected employee for each calendar day on which the employer required or permitted the employee to work in excess of the standard workweek of 40 hours without paying overtime wages required by the Contract Work Hours and Safety Standards Act.

(c) Withholding for unpaid wages and liquidated damages. The Contracting Officer will withhold from payments due under the contract sufficient funds required to satisfy any Contractor or subcontractor liabilities for unpaid wages and liquidated damages. If amounts withheld under the contract are insufficient to satisfy Contractor or subcontractor liabilities, the Contracting Officer will withhold payments from other Federal or Federally assisted contracts held by the same Contractor that are subject to the Contract Work Hours and Safety Standards Act.

(d) Payrolls and basic records.

(1) The Contractor and its subcontractors shall maintain payrolls and basic payroll records for all laborers and mechanics working on the contract during the contract and shall make them available to the Government until 3 years after contract completion. The records shall contain the name and address of each employee, social security number, labor classifications, hourly rates of wages paid, daily and weekly number of hours worked, deductions made, and actual wages paid. The records need not duplicate those required for construction work by Department of Labor regulations at 29 CFR 5.5(a)(3) implementing the Davis-Bacon Act.

(2) The Contractor and its subcontractors shall allow authorized representatives of the Contracting Officer or the Department of Labor to inspect, copy, or transcribe records maintained under paragraph (d)(1) of this clause. The Contractor or subcontractor also

shall allow authorized representatives of the Contracting Officer or Department of Labor to interview employees in the workplace during working hours.

(e) Subcontracts. The Contractor shall insert the provisions set forth in paragraphs (a) through (d) of this clause in subcontracts exceeding $100,000 and require subcontractors to include these provisions in any lower tier subcontracts. The Contractor shall be responsible for compliance by any subcontractor or lower-tier subcontractor with the provisions set forth in paragraphs (a) through (d) of this clause.

(End of clause)

52.222-6 DAVIS-BACON ACT (FEB 1995)

(a) All laborers and mechanics employed or working upon the site of the work will be paid unconditionally and not less often than once a week, and without subsequent deduction or rebate on any account (except such payroll deductions as are permitted by regulations issued by the Secretary of Labor under the Copeland Act (29 CFR Part 3), the full amount of wages and bona fide fringe benefits (or cash equivalents thereof) due at time of payment computed at rates not less than those contained in the wage determination of the Secretary of Labor which is attached hereto and made a part hereof, regardless of any contractual relationship which may be alleged to exist between the Contractor and such laborers and mechanics. Contributions made or costs reasonably anticipated for bona fide fringe benefits under section 1(b)(2) of the Davis-Bacon Act on behalf of laborers or mechanics are considered wages paid to such laborers or mechanics, subject to the provisions of paragraph (d) of this clause; also, regular contributions made or costs incurred for more than a weekly period (but not less often than quarterly) under plans, funds, or programs which cover the particular weekly period, are deemed to be constructively made or incurred during such period. Such laborers and mechanics shall be paid not less than the appropriate wage rate and fringe benefits in the wage determination for the classification of work actually performed, without regard to skill, except as provided in the clause entitled Apprentices and Trainees. Laborers or mechanics performing work in more than one classification may be compensated at the rate specified for each classification for the time actually worked therein; provided, That the employer's payroll records accurately set forth the time spent in each classification in which work is performed. The wage determination (including any additional classifications and wage rates conformed under paragraph (b) of this clause) and the Davis-Bacon poster (WH-1321) shall be posted at all times by the Contractor and its subcontractors at the site of the work in a prominent and accessible place where it can be easily seen by the workers.

(b)(1) The Contracting Officer shall require that any class of laborers or mechanics which is not listed in the wage determination and which is to be employed under the contract shall be classified in conformance with the wage determination. The Contracting Officer shall approve an additional classification and wage rate and fringe benefits therefor only when all the following criteria have been met:

(i) The work to be performed by the classification requested is not performed by a classification in the wage determination.

(ii) The classification is utilized in the area by the construction industry.

(iii) The proposed wage rate, including any bona fide fringe benefits, bears a reasonable relationship to the wage rates contained in the wage determination.

(2) If the Contractor and the laborers and mechanics to be employed in the classification (if known), or their representatives, and the Contracting Officer agree on the classification and wage rate (including the amount designated for fringe benefits, where appropriate), a report of the action taken shall be sent by the Contracting Officer to the Administrator of the Wage and Hour Division, Employment Standards Administration, U.S. Department of Labor, Washington, DC 20210. The Administrator or an authorized representative will approve, modify, or disapprove every additional classification action within 30 days of receipt and so advise the Contracting Officer or will notify the Contracting Officer within the 30-day period that additional time is necessary.

(3) In the event the Contractor, the laborers or mechanics to be employed in the classification, or their representatives, and the Contracting Officer do not agree on the proposed classification and wage rate (including the amount designated for fringe benefits, where appropriate), the Contracting Officer shall refer the questions, including the views of all interested parties and the recommendation of the Contracting Officer, to the Administrator of the Wage and Hour Division for determination. The Administrator, or an authorized representative, will issue a determination within 30 days of receipt and so advise the Contracting Officer or will notify the Contracting Officer within the 30-day period that additional time is necessary.

(4) The wage rate (including fringe benefits, where appropriate) determined pursuant to subparagraphs (b)(2) and (b)(3) of this clause shall be paid to all workers performing work in the classification under this contract from the first day on which work is performed in the classification.

(c) Whenever the minimum wage rate prescribed in the contract for a class of laborers or mechanics includes a fringe benefit which is not expressed as an hourly rate, the Contractor shall either pay the benefit as stated in the wage determination or shall pay another bona fide fringe benefit or an hourly cash equivalent thereof.

(d) If the Contractor does not make payments to a trustee or other third person, the Contractor may consider as part of the wages of any laborer or mechanic the amount of any costs reasonably anticipated in providing bona fide fringe benefits under a plan or program; provided, That the Secretary of Labor has found, upon the written request of the Contractor, that the applicable standards of the Davis-Bacon Act have been met. The Secretary of Labor may require the Contractor to set aside in a separate account assets for the meeting of obligations under the plan or program.

52.222-7 WITHHOLDING OF FUNDS (FEB 1988)

The Contracting Officer shall, upon his or her own action or upon written request of an authorized representative of the Department of Labor, withhold or cause to be withheld from the Contractor under this contract or any other Federal contract with the same Prime Contractor, or any other Federally assisted contract subject to Davis-Bacon prevailing wage requirements, which is held by the same Prime Contractor, so much of the accrued payments or advances as may be considered necessary to pay laborers and mechanics, including apprentices, trainees, and helpers, employed by the Contractor or any subcontractor the full amount of wages required by the contract. In the event of failure to pay any laborer or mechanic, including any apprentice, trainee, or helper, employed or working on the site of the work, all or part of the wages required by the contract, the Contracting Officer may, after written notice to the Contractor, take such action as may be necessary to cause the suspension of any further payment, advance, or guarantee of funds until such violations have ceased.

52.222-8 PAYROLLS AND BASIC RECORDS (FEB 1988)

(a) Payrolls and basic records relating thereto shall be maintained by the Contractor during the course of the work and preserved for a period of 3 years thereafter for all laborers and mechanics working at the site of the work. Such records shall contain the name, address, and social security number of each such worker, his or her correct classification, hourly rates of wages paid (including rates of contributions or costs anticipated for bona fide fringe benefits or cash equivalents thereof of the types described in section 1(b)(2)(B) of the Davis-Bacon Act), daily and weekly number of hours worked, deductions made, and actual wages paid. Whenever the Secretary of Labor has found, under paragraph (d) of the clause entitled Davis-Bacon Act, that the wages of any laborer or mechanic include the amount of any costs reasonably anticipated in providing benefits under a plan or program described in section 1(b)(2)(B) of the Davis-Bacon Act, the Contractor shall maintain records which show that the commitment to provide such benefits is enforceable, that the plan or program is financially responsible, and that the plan or program has been communicated in writing to the laborers or mechanics affected, and records which show the costs anticipated or the actual cost incurred in providing such benefits. Contractors employing apprentices or trainees under approved programs shall maintain written evidence of the registration of apprenticeship programs and certification of trainee programs, the registration of the apprentices and trainees, and the ratios and wage rates prescribed in the applicable programs.

(b)(1) The Contractor shall submit weekly for each week in which any contract work is performed a copy of all payrolls to the Contracting Officer. The payrolls submitted shall set out accurately and completely all of the information required to be maintained under paragraph (a) of this clause. This information may be submitted in any form desired. Optional Form WH-347 (Federal Stock Number 029-005-00014-1) is available for this

purpose and may be purchased from the Superintendent of Documents, U.S. Government Printing Office, Washington, DC 20402. The Prime Contractor is responsible for the submission of copies of payrolls by all subcontractors.

(2) Each payroll submitted shall be accompanied by a "Statement of Compliance," signed by the Contractor or subcontractor or his or her agent who pays or supervises the payment of the persons employed under the contract and shall certify--

(i) That the payroll for the payroll period contains the information required to be maintained under paragraph (a) of this clause and that such information is correct and complete;

(ii) That each laborer or mechanic (including each helper, apprentice, and trainee) employed on the contract during the payroll period has been paid the full weekly wages earned, without rebate, either directly or indirectly, and that no deductions have been made either directly or indirectly from the full wages earned, other than permissible deductions as set forth in the Regulations, 29 CFR Part 3; and

(iii) That each laborer or mechanic has been paid not less than the applicable wage rates and fringe benefits or cash equivalents for the classification of work performed, as specified in the applicable wage determination incorporated into the contract.

(3) The weekly submission of a properly executed certification set forth on the reverse side of Optional Form WH-347 shall satisfy the requirement for submission of the "Statement of Compliance" required by subparagraph (b)(2) of this clause.

(4) The falsification of any of the certifications in this clause may subject the Contractor or subcontractor to civil or criminal prosecution under Section 1001 of Title 18 and Section 3729 of Title 31 of the United States Code.

(c) The Contractor or subcontractor shall make the records required under paragraph (a) of this clause available for inspection, copying, or transcription by the Contracting Officer or authorized representatives of the Contracting Officer or the Department of Labor. The Contractor or subcontractor shall permit the Contracting Officer or representatives of the Contracting Officer or the Department of Labor to interview employees during working hours on the job. If the Contractor or subcontractor fails to submit required records or to make them available, the Contracting Officer may, after written notice to the Contractor, take such action as may be necessary to cause the suspension of any further payment. Furthermore, failure to submit the required records upon request or to make such records available may be grounds for debarment action pursuant to 29 CFR 5.12.

52.222-9 APPRENTICES AND TRAINEES (FEB 1988)

(a) Apprentices. Apprentices will be permitted to work at less than the predetermined

rate for the work they performed when they are employed pursuant to and individually registered in a bona fide apprenticeship program registered with the U.S. Department of Labor, Employment and Training Administration, Bureau of Apprenticeship and Training, or with a State Apprenticeship Agency recognized by the Bureau, or if a person is employed in his or her first 90 days of probationary employment as an apprentice in such an apprenticeship program, who is not individually registered in the program, but who has been certified by the Bureau of Apprenticeship and Training or a State Apprenticeship Agency (where appropriate) to be eligible for probationary employment as an apprentice. The allowable ratio of apprentices to journeymen on the job site in any craft classification shall not be greater than the ratio permitted to the Contractor as to the entire work force under the registered program. Any worker listed on a payroll at an apprentice wage rate, who is not registered or otherwise employed as stated in this paragraph, shall be paid not less than the applicable wage determination for the classification of work actually performed. In addition, any apprentice performing work on the job site in excess of the ratio permitted under the registered program shall be paid not less than the applicable wage rate on the wage determination for the work actually performed. Where a contractor is performing construction on a project in a locality other than that in which its program is registered, the ratios and wage rates (expressed in percentages of the journeyman's hourly rate) specified in the Contractor's or subcontractor's registered program shall be observed. Every apprentice must be paid at not less than the rate specified in the registered program for the apprentice's level of progress, expressed as a percentage of the journeyman hourly rate specified in the applicable wage determination. Apprentices shall be paid fringe benefits in accordance with the provisions of the apprenticeship program. If the apprenticeship program does not specify fringe benefits, apprentices must be paid the full amount of fringe benefits listed on the wage determination for the applicable classification. If the Administrator determines that a different practice prevails for the applicable apprentice classification, fringes shall be paid in accordance with that determination. In the event the Bureau of Apprenticeship and Training, or a State Apprenticeship Agency recognized by the Bureau, withdraws approval of an apprenticeship program, the Contractor will no longer be permitted to utilize apprentices at less than the applicable predetermined rate for the work performed until an acceptable program is approved.

(b) Trainees. Except as provided in 29 CFR 5.16, trainees will not be permitted to work at less than the predetermined rate for the work performed unless they are employed pursuant to and individually registered in a program which has received prior approval, evidenced by formal certification by the U.S. Department of Labor, Employment and Training Administration. The ratio of trainees to journeymen on the job site shall not be greater than permitted under the plan approved by the Employment and Training Administration. Every trainee must be paid at not less than the rate specified in the approved program for the trainee's level of progress, expressed as a percentage of the journeyman hourly rate specified in the applicable wage determination. Trainees shall be paid fringe benefits in accordance with the provisions of the trainee program. If the trainee program does not mention fringe benefits, trainees shall be paid the full amount of fringe benefits listed in the wage determination unless the Administrator of the Wage and Hour Division determines that there is an apprenticeship program associated with the

corresponding journeyman wage rate in the wage determination which provides for less than full fringe benefits for apprentices. Any employee listed on the payroll at a trainee rate who is not registered and participating in a training plan approved by the Employment and Training Administration shall be paid not less than the applicable wage rate in the wage determination for the classification of work actually performed. In addition, any trainee performing work on the job site in excess of the ratio permitted under the registered program shall be paid not less than the applicable wage rate in the wage determination for the work actually performed. In the event the Employment and Training Administration withdraws approval of a training program, the Contractor will no longer be permitted to utilize trainees at less than the applicable predetermined rate for the work performed until an acceptable program is approved.

(c) Equal employment opportunity. The utilization of apprentices, trainees, and journeymen under this clause shall be in conformity with the equal employment opportunity requirements of Executive Order 11246, as amended, and 29 CFR Part 30.

52.222-10 COMPLIANCE WITH COPELAND ACT REQUIREMENTS (FEB 1988)

The Contractor shall comply with the requirements of 29 CFR Part 3, which are hereby incorporated by reference in this contract.

52.222-11 SUBCONTRACTS (LABOR STANDARDS (FEB 1988)

(a) The Contractor or subcontractor shall insert in any subcontracts the clauses entitled Davis-Bacon Act, Contract Work Hours and Safety Standards Act-Overtime Compensation, Apprentices and Trainees, Payrolls and Basic Records, Compliance with Copeland Act Requirements, Withholding of Funds, Subcontracts (Labor Standards), Contract Termination-Debarment, Disputes Concerning Labor Standards, Compliance with Davis-Bacon and Related Act Regulations, and Certification of Eligibility, and such other clauses as the Contracting Officer may, by appropriate instructions, require, and also a clause requiring subcontractors to include these clauses in any lower tier subcontracts. The Prime Contractor shall be responsible for compliance by any subcontractor or lower tier subcontractor with all the contract clauses cited in this paragraph.

(b)(1) Within 14 days after award of the contract, the Contractor shall deliver to the Contracting Officer a completed Statement and Acknowledgment Form (SF 1413) for each subcontract, including the subcontractor's signed and dated acknowledgment that the clauses set forth in paragraph (a) of this clause have been included in the subcontract.

(2) Within 14 days after the award of any subsequently awarded subcontract the Contractor shall deliver to the Contracting Officer an updated completed SF 1413 for such additional subcontract.

52.222-12 CONTRACT TERMINATION--DEBARMENT (FEB 1988)

A breach of the contract clauses entitled Davis-Bacon Act, Contract Work Hours and Safety Standards Act--Overtime Compensation, Apprentices and Trainees, Payrolls and Basic Records, Compliance with Copeland Act Requirements, Subcontracts (Labor Standards), Compliance with Davis-Bacon and Related Act Regulations, or Certification of Eligibility may be grounds for termination of the contract, and for debarment as a Contractor and subcontractor as provided in 29 CFR 5.12.

52.222-13 COMPLIANCE WITH DAVIS-BACON AND RELATED ACT REGULATIONS (FEB 1988)

All rulings and interpretations of the Davis-Bacon and Related Acts contained in 29 CFR Parts 1, 3, and 5 are hereby incorporated by reference in this contract.

52.222-14 DISPUTES CONCERNING LABOR STANDARDS (FEB 1988)

The United States Department of Labor has set forth in 29 CFR Parts 5, 6, and 7 procedures for resolving disputes concerning labor standards requirements. Such disputes shall be resolved in accordance with those procedures and not the Disputes clause of this contract. Disputes within the meaning of this clause include disputes between the Contractor (or any of its subcontractors) and the contracting agency, the U.S. Department of Labor, or the employees or their representatives.

52.222-15 CERTIFICATION OF ELIGIBILITY (FEB 1988)

(a) By entering into this contract, the Contractor certifies that neither it (nor he or she) nor any person or firm who has an interest in the Contractor's firm is a person or firm ineligible to be awarded Government contracts by virtue of section 3(a) of the Davis-Bacon Act or 29 CFR 5.12(a)(1).

(b) No part of this contract shall be subcontracted to any person or firm ineligible for award of a Government contract by virtue of section 3(a) of the Davis-Bacon Act or 29 CFR 5.12(a)(1).

(c) The penalty for making false statements is prescribed in the U.S. Criminal Code, 18 U.S.C. 1001.

52.222-21 PROHIBITION OF SEGREGATED FACILITIES (FEB 1999)

(a) Segregated facilities, as used in this clause, means any waiting rooms, work areas, rest rooms and wash rooms, restaurants and other eating areas, time clocks, locker rooms and other storage or dressing areas, parking lots, drinking fountains, recreation or entertainment areas, transportation, and housing facilities provided for employees, that are segregated by explicit directive or are in fact segregated on the basis of race, color, religion, sex, or national origin because of written or oral policies or employee custom. The term does not include separate or single-user rest rooms or necessary dressing or sleeping areas provided to assure privacy between the sexes.

(b) The Contractor agrees that it does not and will not maintain or provide for its employees any segregated facilities at any of its establishments, and that it does not and will not permit its employees to perform their services at any location under its control where segregated facilities are maintained. The Contractor agrees that a breach of this clause is a violation of the Equal Opportunity clause in this contract.

(c) The Contractor shall include this clause in every subcontract and purchase order that is subject to the Equal Opportunity clause of this contract.

(End of clause)

52.222-26 EQUAL OPPORTUNITY (FEB 1999)

(a) If, during any 12-month period (including the 12 months preceding the award of this contract), the Contractor has been or is awarded nonexempt Federal contracts and/or subcontracts that have an aggregate value in excess of $10,000, the Contractor shall comply with subparagraphs (b)(1) through (11) of this clause. Upon request, the Contractor shall provide information necessary to determine the applicability of this clause.

(b) During performing this contract, the Contractor agrees as follows:

(1) The Contractor shall not discriminate against any employee or applicant for employment because of race, color, religion, sex, or national origin. However, it shall not be a violation of this clause for the Contractor to extend a publicly announced preference in employment to Indians living on or near an Indian reservation, in connection with employment opportunities on or near an Indian reservation, as permitted by 41 CFR 60-1.5.

(2) The Contractor shall take affirmative action to ensure that applicants are employed, and that employees are treated during employment, without regard to their race, color, religion, sex, or national origin. This shall include, but not be limited to, (i) employment, (ii) upgrading, (iii) demotion, (iv) transfer, (v) recruitment or recruitment advertising, (vi) layoff or termination, (vii) rates of pay or other forms of compensation, and (viii) selection for training, including apprenticeship.

(3) The Contractor shall post in conspicuous places available to employees and applicants for employment the notices to be provided by the Contracting Officer that explain this clause.

(4) The Contractor shall, in all solicitations or advertisements for employees placed by or on behalf of the Contractor, state that all qualified applicants will receive consideration for employment without regard to race, color, religion, sex, or national origin.

(5) The Contractor shall send, to each labor union or representative of workers with which it has a collective bargaining agreement or other contract or understanding, the notice to be provided by the Contracting Officer advising the labor union or workers' representative of the Contractor's commitments under this clause, and post copies of the notice in conspicuous places available to employees and applicants for employment.

(6) The Contractor shall comply with Executive Order 11246, as amended, and the rules, regulations, and orders of the Secretary of Labor.

(7) The Contractor shall furnish to the contracting agency all information required by Executive Order 11246, as amended, and by the rules, regulations, and orders of the Secretary of Labor. The Contractor shall also file Standard Form 100 (EEO-1), or any successor form, as prescribed in 41 CFR part 60-1. Unless the Contractor has filed within the 12 months preceding the date of contract award, the Contractor shall, within 30 days after contract award, apply to either the regional Office of Federal Contract Compliance Programs (OFCCP) or the local office of the Equal Employment Opportunity Commission for the necessary forms.

(8) The Contractor shall permit access to its premises, during normal business hours, by the contracting agency or the OFCCP for the purpose of conducting on-site compliance evaluations and complaint investigations. The Contractor shall permit the Government to inspect and copy any books, accounts, records (including computerized records), and other material that may be relevant to the matter under investigation and pertinent to compliance with Executive Order 11246, as amended, and rules and regulations that implement the Executive Order.

(9) If the OFCCP determines that the Contractor is not in compliance with this clause or any rule, regulation, or order of the Secretary of Labor, this contract may be canceled, terminated, or suspended in whole or in part and the Contractor may be declared ineligible for further Government contracts, under the procedures authorized in Executive Order 11246, as amended. In addition, sanctions may be imposed and remedies invoked against the Contractor as provided in Executive Order 11246, as amended; in the rules, regulations, and orders of the Secretary of Labor; or as otherwise provided by law.

(10) The Contractor shall include the terms and conditions of subparagraphs (b)(1) through (11) of this clause in every subcontract or purchase order that is not exempted by the rules, regulations, or orders of the Secretary of Labor issued under Executive Order 11246, as amended, so that these terms and conditions will be binding upon each

subcontractor or vendor.

(11) The Contractor shall take such action with respect to any subcontract or purchase order as the contracting officer may direct as a means of enforcing these terms and conditions, including sanctions for noncompliance; provided, that if the Contractor becomes involved in, or is threatened with, litigation with a subcontractor or vendor as a result of any direction, the Contractor may request the United States to enter into the litigation to protect the interests of the United States.

(c) Notwithstanding any other clause in this contract, disputes relative to this clause will be governed by the procedures in 41 CFR 60-1.1.

52.222-27 AFFIRMATIVE ACTION COMPLIANCE REQUIREMENTS FOR CONSTRUCTION (FEB 1999)

(a) Definitions. "Covered area," as used in this clause, means the geographical area described in the solicitation for this contract.

"Deputy Assistant Secretary," as used in this clause, means Deputy Assistant Secretary for Federal Contract Compliance, U.S. Department of Labor, or a designee.

"Employer's identification number," as used in this clause, means the Federal Social Security number used on the employer's quarterly federal tax return, U.S. Treasury Department Form 941.

"Minority," as used in this clause, means--

(1) American Indian or Alaskan Native (all persons having origins in any of the original peoples of North America and maintaining identifiable tribal affiliations through membership and participation or community identification).

(2) Asian and Pacific Islander (all persons having origins in any of the original peoples of the Far East, Southeast Asia, the Indian Subcontinent, or the Pacific Islands);

(3) Black (all persons having origins in any of the black African racial groups not of Hispanic origin); and

(4) Hispanic (all persons of Mexican, Puerto Rican, Cuban, Central or South American, or other Spanish culture or origin, regardless of race).

(b) If the Contractor, or a subcontractor at any tier, subcontracts a portion of the work involving any construction trade, each such subcontract in excess of $10,000 shall include this clause and the Notice containing the goals for minority and female participation stated in the solicitation for this contract.

(c) If the Contractor is participating in a Hometown Plan (41 CFR 60-4) approved by the U.S. Department of Labor in a covered area, either individually or through an association, its affirmative action obligations on all work in the plan area (including goals) shall comply with the plan for those trades that have unions participating in the plan. Contractors must be able to demonstrate participation in, and compliance with, the provisions of the plan. Each Contractor or subcontractor participating in an approved plan is also required to comply with its obligations under the Equal Opportunity clause, and to make a good faith effort to achieve each goal under the plan in each trade in which it has employees. The overall good-faith performance by other Contractors or subcontractors toward a goal in an approved plan does not excuse any Contractor's or subcontractor's failure to make good-faith efforts to achieve the plan's goals.

(d) The Contractor shall implement the affirmative action procedures in subparagraphs (g)(1) through (16) of this clause. The goals stated in the solicitation for this contract are expressed as percentages of the total hours of employment and training of minority and female utilization that the Contractor should reasonably be able to achieve in each construction trade in which it has employees in the covered area. If the Contractor performs construction work in a geographical area located outside of the covered area, it shall apply the goals established for the geographical area where that work is actually performed. The Contractor is expected to make substantially uniform progress toward its goals in each craft.

(e) Neither the terms and conditions of any collective bargaining agreement, nor the failure by a union with which the Contractor has a collective bargaining agreement, to refer minorities or women shall excuse the Contractor's obligations under this clause, Executive Order 11246, as amended, or the regulations thereunder.

(f) In order for the nonworking training hours of apprentices and trainees to be counted in meeting the goals, apprentices and trainees must be employed by the Contractor during the training period, and the Contractor must have made a commitment to employ the apprentices and trainees at the completion of their training, subject to the availability of employment opportunities. Trainees must be trained pursuant to training programs approved by the U.S. Department of Labor.

(g) The Contractor shall take affirmative action to ensure equal employment opportunity. The evaluation of the Contractor's compliance with this clause shall be based upon its effort to achieve maximum results from its actions. The Contractor shall document these efforts fully and implement affirmative action steps at least as extensive as the following:

(1) Ensure a working environment free of harassment, intimidation, and coercion at all sites and in all facilities where the Contractor's employees are assigned to work. The Contractor, if possible, will assign two or more women to each construction project. The Contractor shall ensure that foremen, superintendents, and other onsite supervisory personnel are aware of and carry out the Contractor's obligation to maintain such a working environment, with specific attention to minority or female individuals working at these sites or facilities.

(2) Establish and maintain a current list of sources for minority and female recruitment. Provide written notification to minority and female recruitment sources and community organizations when the Contractor or its unions have employment opportunities available, and maintain a record of the organizations' responses.

(3) Establish and maintain a current file of the names, addresses, and telephone numbers of each minority and female off-the-street applicant, referrals of minorities or females from unions, recruitment sources, or community organizations, and the action taken with respect to each individual. If an individual was sent to the union hiring hall for referral and not referred back to the Contractor by the union or, if referred back, not employed by the
Contractor, this shall be documented in the file, along with whatever additional actions the Contractor may have taken.

(4) Immediately notify the Deputy Assistant Secretary when the union or unions with which the Contractor has a collective bargaining agreement has not referred back to the Contractor a minority or woman sent by the Contractor, or when the Contractor has other information that the union referral process has impeded the Contractor's efforts to meet its obligations.

(5) Develop on-the-job training opportunities and/or participate in training programs for the area that expressly include minorities and women, including upgrading programs and apprenticeship and trainee programs relevant to the Contractor's employment needs, especially those programs funded or approved by the Department of Labor. The Contractor shall provide notice of these programs to the sources compiled under subparagraph (g)(2) of this clause.

(6) Disseminate the Contractor's equal employment policy by--

(i) Providing notice of the policy to unions and to training, recruitment, and outreach programs, and requesting their cooperation in assisting the Contractor in meeting its contract obligations;

(ii) Including the policy in any policy manual and in collective bargaining agreements;

(iii) Publicizing the policy in the company newspaper, annual report, etc.;

(iv) Reviewing the policy with all management personnel and with all minority and female employees at least once a year; and

(v) Posting the policy on bulletin boards accessible to employees at each location where construction work is performed.

(7) Review, at least annually, the Contractor's equal employment policy and affirmative action obligations with all employees having responsibility for hiring, assignment, layoff,

termination, or other employment decisions. Conduct review of this policy with all on-site supervisory personnel before initiating construction work at a job site. A written record shall be made and maintained identifying the time and place of these meetings, persons attending, subject matter discussed, and disposition of the subject matter.

(8) Disseminate the Contractor's equal employment policy externally by including it in any advertising in the news media, specifically including minority and female news media. Provide written notification to, and discuss this policy with, other Contractors and subcontractors with which the Contractor does or anticipates doing business.

(9) Direct recruitment efforts, both oral and written, to minority, female, and community organizations, to schools with minority and female students, and to minority and female recruitment and training organizations serving the Contractor's recruitment area and employment needs. Not later than 1 month before the date for acceptance of applications for apprenticeship or training by any recruitment source, send written notification to organizations such as the above, describing the openings, screening procedures, and tests to be used in the selection process.

(10) Encourage present minority and female employees to recruit minority persons and women. Where reasonable, provide after-school, summer, and vacation employment to minority and female youth both on the site and in other areas of the Contractor's workforce.

(11) Validate all tests and other selection requirements where required under 41 CFR 60-3.

(12) Conduct, at least annually, an inventory and evaluation at least of all minority and female personnel for promotional opportunities. Encourage these employees to seek or to prepare for, through appropriate training, etc., opportunities for promotion.

(13) Ensure that seniority practices, job classifications, work assignments, and other personnel practices do not have a discriminatory effect by continually monitoring all personnel and employment-related activities to ensure that the Contractor's obligations under this contract are being carried out.

(14) Ensure that all facilities and company activities are nonsegregated except that separate or single-user rest rooms and necessary dressing or sleeping areas shall be provided to assure privacy between the sexes.

(15) Maintain a record of solicitations for subcontracts for minority and female construction contractors and suppliers, including circulation of solicitations to minority and female contractor associations and other business associations.

(16) Conduct a review, at least annually, of all supervisors' adherence to and performance under the Contractor's equal employment policy and affirmative action obligations.

(h) The Contractor is encouraged to participate in voluntary associations that may assist in fulfilling one or more of the affirmative action obligations contained in subparagraphs (g)(1) through (16) of this clause. The efforts of a contractor association, joint contractor-union, contractor-community, or similar group of which the contractor is a member and participant may be asserted as fulfilling one or more of its obligations under subparagraphs (g)(1) through (16) of this clause, provided the Contractor--

(1) Actively participates in the group;

(2) Makes every effort to ensure that the group has a positive impact on the employment of minorities and women in the industry;

(3) Ensures that concrete benefits of the program are reflected in the Contractor's minority and female workforce participation;

(4) Makes a good-faith effort to meet its individual goals and timetables; and

(5) Can provide access to documentation that demonstrates the effectiveness of actions taken on behalf of the Contractor. The obligation to comply is the Contractor's, and failure of such a group to fulfill an obligation shall not be a defense for the Contractor's noncompliance.

(i) A single goal for minorities and a separate single goal for women shall be established. The Contractor is required to provide equal employment opportunity and to take affirmative action for all minority groups, both male and female, and all women, both minority and nonminority. Consequently, the Contractor may be in violation of Executive Order 11246, as amended, if a particular group is employed in a substantially disparate manner.

(j) The Contractor shall not use goals or affirmative action standards to discriminate against any person because of race, color, religion, sex, or national origin.

(k) The Contractor shall not enter into any subcontract with any person or firm debarred from Government contracts under Executive Order 11246, as amended.

(l) The Contractor shall carry out such sanctions and penalties for violation of this clause and of the Equal Opportunity clause, including suspension, termination, and cancellation of existing subcontracts, as may be imposed or ordered under Executive Order 11246, as amended, and its implementing regulations, by the OFCCP. Any failure to carry out these sanctions and penalties as ordered shall be a violation of this clause and Executive Order 11246, as amended.

(m) The Contractor in fulfilling its obligations under this clause shall implement affirmative action procedures at least as extensive as those prescribed in paragraph (g) of this clause, so as to achieve maximum results from its efforts to ensure equal employment opportunity. If the Contractor fails to comply with the requirements of Executive Order

11246, as amended, the implementing regulations, or this clause, the Deputy Assistant Secretary shall take action as prescribed in 41 CFR 60-4.8.

(n) The Contractor shall designate a responsible official to--

(1) Monitor all employment-related activity to ensure that the Contractor's equal employment policy is being carried out;

(2) Submit reports as may be required by the Government; and

(3) Keep records that shall at least include for each employee the name, address, telephone number, construction trade, union affiliation (if any), employee identification number, social security number, race, sex, status (e.g., mechanic, apprentice, trainee, helper, or laborer), dates of changes in status, hours worked per week in the indicated trade, rate of pay, and locations at which the work was performed. Records shall be maintained in an easily understandable and retrievable form; however, to the degree that existing records satisfy this requirement, separate records are not required to be maintained.

Nothing contained herein shall be construed as a limitation upon the application of other laws that establish different standards of compliance or upon the requirements for the hiring of local or other area residents (e.g., those under the Public Works Employment Act of 1977 and the Community Development Block Grant Program).

52.222-35 AFFIRMATIVE ACTION FOR DISABLED VETERANS AND VETERANS OF THE VIETNAM ERA (APR 1998)

(a)) Definitions. As used in this clause--

All employment openings includes all positions except executive and top management, those positions that will be filled from within the contractor's organization, and positions lasting 3 days or less. This term includes full-time employment, temporary employment of more than 3 days' duration, and part-time employment.

Appropriate office of the State employment service system means the local office of the Federal-State national system of public employment offices with assigned responsibility to serve the area where the employment opening is to be filled, including the District of Columbia, Guam, the Commonwealth of Puerto Rico, and the Virgin Islands.

Positions that will be filled from within the Contractor's organization means employment openings for which no consideration will be given to persons outside the Contractor's organization (including any affiliates, subsidiaries, and parent companies) and includes any openings that the Contractor proposes to fill from regularly established “recall” lists. The exception does not apply to a particular opening once an employer decides to consider applicants outside of its organization.

Veteran of the Vietnam era means a person who--

(1) Served on active duty for a period of more than 180 days, any part of which occurred between August 5, 1964, and May 7, 1975, and was discharged or released therefrom with other than a dishonorable discharge; or

(2) Was discharged or released from active duty for a service-connected disability if any part of such active duty was performed between August 5, 1964, and May 7, 1975.

(b) General. (1) Regarding any position for which the employee or applicant for employment is qualified, the Contractor shall not discriminate against the individual because the individual is a disabled veteran or a veteran of the Vietnam era. The Contractor agrees to take affirmative action to employ, advance in employment, and otherwise treat qualified disabled veterans and veterans of the Vietnam era without discrimination based upon their disability or veterans' status in all employment practices such as--

(i) Employment;

(ii) Upgrading;

(iii) Demotion or transfer;

(iv) Recruitment;

(v) Advertising;

(vi) Layoff or termination;

(vii) Rates of pay or other forms of compensation; and

(viii) Selection for training, including apprenticeship.

(2) The Contractor agrees to comply with the rules, regulations, and relevant orders of the Secretary of Labor (Secretary) issued under the Vietnam Era Veterans' Readjustment Assistance Act of 1972 (the Act), as amended.

(c) Listing openings. (1) The Contractor agrees to list all employment openings existing at contract award or occurring during contract performance, at an appropriate office of the State employment service system in the locality where the opening occurs. These openings include those occurring at any Contractor facility, including one not connected with performing this contract. An independent corporate affiliate is exempt from this requirement.

(2) State and local government agencies holding Federal contracts of $10,000 or more shall also list all their employment openings with the appropriate office of the State employment service.

(3) The listing of employment openings with the State employment service system is required at least concurrently with using any other recruitment source or effort and involves the obligations of placing a bona fide job order, including accepting referrals of veterans and nonveterans. This listing does not require hiring any particular job applicant or hiring from any particular group of job applicants and is not intended to relieve the Contractor from any requirements of Executive orders or regulations concerning nondiscrimination in employment.

(4) Whenever the Contractor becomes contractually bound to the listing terms of this clause, it shall advise the State employment service system, in each State where it has establishments, of the name and location of each hiring location in the State. As long as the Contractor is contractually bound to these terms and has so advised the State system, it need not advise the State system of subsequent contracts. The Contractor may advise the State system when it is no longer bound by this contract clause.

(d) Applicability. This clause does not apply to the listing of employment openings that occur and are filled outside the 50 States, the District of Columbia, the Commonwealth of Puerto Rico, Guam, and the Virgin Islands.

(e) Postings. (1) The Contractor agrees to post employment notices stating (i) the Contractor's obligation under the law to take affirmative action to employ and advance in employment qualified disabled veterans and veterans of the Vietnam era, and (ii) the rights of applicants and employees.

(2) These notices shall be posted in conspicuous places that are available to employees and applicants for employment. They shall be in a form prescribed by the Deputy Assistant Secretary for Federal Contract Compliance Programs, Department of Labor (Deputy Assistant Secretary), and provided by or through the Contracting Officer.

(3) The Contractor shall notify each labor union or representative of workers with which it has a collective bargaining agreement or other contract understanding, that the Contractor is bound by the terms of the Act, and is committed to take affirmative action to employ, and advance in employment, qualified disabled veterans and veterans of the Vietnam Era.

(f) Noncompliance. If the Contractor does not comply with the requirements of this clause, appropriate actions may be taken under the rules, regulations, and relevant orders of the Secretary issued pursuant to the Act.

(g) Subcontracts. The Contractor shall include the terms of this clause in every subcontract or purchase order of $10,000 or more unless exempted by rules, regulations,

or orders of the Secretary. The Contractor shall act as specified by the Deputy Assistant Secretary to enforce the terms, including action for noncompliance.

(End of clause)

52.222-36 AFFIRMATIVE ACTION FOR WORKERS WITH DISABILITIES (JUN 1998)

(a) General. (1) Regarding any position for which the employee or applicant for employment is qualified, the Contractor shall not discriminate against any employee or applicant because of physical or mental disability. The Contractor agrees to take affirmative action to employ, advance in employment, and otherwise treat qualified individuals with disabilities without discrimination based upon their physical or mental disability in all employment practices such as--

(i) Recruitment, advertising, and job application procedures;

(ii) Hiring, upgrading, promotion, award of tenure, demotion, transfer, layoff, termination, right of return from layoff, and rehiring;

(iii) Rates of pay or any other form of compensation and changes in compensation;

(iv) Job assignments, job classifications, organizational structures, position descriptions, lines of progression, and seniority lists;

(v) Leaves of absence, sick leave, or any other leave;

(vi) Fringe benefits available by virtue of employment, whether or not administered by the Contractor;

(vii) Selection and financial support for training, including apprenticeships, professional meetings, conferences, and other related activities, and selection for leaves of absence to pursue training;

(viii) Activities sponsored by the Contractor, including social or recreational programs; and

(ix) Any other term, condition, or privilege of employment.

(2) The Contractor agrees to comply with the rules, regulations, and relevant orders of the Secretary of Labor (Secretary) issued under the Rehabilitation Act of 1973 (29 U.S.C. 793) (the Act), as amended.

(b) Postings. (1) The Contractor agrees to post employment notices stating--

(i) The Contractor's obligation under the law to take affirmative action to employ and advance in employment qualified individuals with disabilities; and

(ii) The rights of applicants and employees.

(2) These notices shall be posted in conspicuous places that are available to employees and applicants for employment. The Contractor shall ensure that applicants and employees with disabilities are informed of the contents of the notice (e.g., the Contractor may have the notice read to a visually disabled individual, or may lower the posted notice so that it might be read by a person in a wheelchair). The notices shall be in a form prescribed by the Deputy Assistant Secretary for Federal Contract Compliance of the U.S. Department of Labor (Deputy Assistant Secretary) and shall be provided by or through the Contracting Officer.

(3) The Contractor shall notify each labor union or representative of workers with which it has a collective bargaining agreement or other contract understanding, that the Contractor is bound by the terms of Section 503 of the Act and is committed to take affirmative action to employ, and advance in employment, qualified individuals with physical or mental disabilities.

(c) Noncompliance. If the Contractor does not comply with the requirements of this clause, appropriate actions may be taken under the rules, regulations, and relevant orders of the Secretary issued pursuant to the Act.

(d) Subcontracts. The Contractor shall include the terms of this clause in every subcontract or purchase order in excess of $10,000 unless exempted by rules, regulations, or orders of the Secretary. The Contractor shall act as specified by the Deputy Assistant Secretary to enforce the terms, including action for noncompliance.

(End of clause)

52.222-37 EMPLOYMENT REPORTS ON DISABLED VETERANS AND VETERANS OF THE VIETNAM ERA (JAN 1999)

(a) Unless the Contractor is a State or local government agency, the Contractor shall report at least annually, as required by the Secretary of Labor, on--

(1) The number of disabled veterans and the number of veterans of the Vietnam era in the workforce of the contractor by job category and hiring location; and

(2) The total number of new employees hired during the period covered by the report, and of that total, the number of disabled veterans, and the number of veterans of the Vietnam era.

(b) The above items shall be reported by completing the form entitled "Federal Contractor Veterans' Employment Report VETS-100."

(c) Reports shall be submitted no later than September 30 of each year beginning September 30, 1988.

(d) The employment activity report required by paragraph (a)(2) of this clause shall reflect total hires during the most recent 12-month period as of the ending date selected for the employment profile report required by paragraph (a)(1) of this clause. Contractors may select an ending date: (1) As of the end of any pay period during the period January through March 1st of the year the report is due, or (2) as of December 31, if the contractor has previous written approval from the Equal Employment Opportunity Commission to do so for purposes of submitting the Employer Information Report EEO-1 (Standard Form 100).

(e) The count of veterans reported according to paragraph (a) of this clause shall be based on voluntary disclosure. Each Contractor subject to the reporting requirements at 38 U.S.C. 4212 shall invite all disabled veterans and veterans of the Vietnam era who wish to benefit under the affirmative action program at 38 U.S.C. 4212 to identify themselves to the Contractor. The invitation shall state that the information is voluntarily provided; that the information will be kept confidential; that disclosure or refusal to provide the information will not subject the applicant or employee to any adverse treatment; and that the information will be used only in accordance with the regulations promulgated under 38 U.S.C. 4212.

(f) Subcontracts. The Contractor shall include the terms of this clause in every subcontract or purchase order of $10,000 or more unless exempted by rules, regulations, or orders of the Secretary.

(End of clause)

52.223-3 HAZARDOUS MATERIAL IDENTIFICATION AND MATERIAL SAFETY DATA (JAN 1997)

(a) "Hazardous material", as used in this clause, includes any material defined as hazardous under the latest version of Federal Standard No. 313 (including revisions adopted during the term of the contract).

(b) The offeror must list any hazardous material, as defined in paragraph (a) of this clause, to be delivered under this contract. The hazardous material shall be properly identified and include any applicable identification number, such as National Stock Number or Special Item Number. This information shall also be included on the Material Safety Data Sheet submitted under this contract.

Material	Identification No.

(If none, insert "None")

_____ _____

_____ _____

_____ _____

(c) This list must be updated during performance of the contract whenever the Contractor determines that any other material to be delivered under this contract is hazardous.

(d) The apparently successful offeror agrees to submit, for each item as required prior to award, a Material Safety Data Sheet, meeting the requirements of 29 CFR 1910.1200(g) and the latest version of Federal Standard No. 313, for all hazardous material identified in paragraph (b) of this clause. Data shall be submitted in accordance with Federal Standard No. 313, whether or not the apparently successful offeror is the actual manufacturer of these items. Failure to submit the Material Safety Data Sheet prior to award may result in the apparently successful offeror being considered nonresponsible and ineligible for award.

(e) If, after award, there is a change in the composition of the item(s) or a revision to Federal Standard No. 313, which renders incomplete or inaccurate the data submitted under paragraph (d) of this clause, the Contractor shall promptly notify the Contracting Officer and resubmit the data.

(f) Neither the requirements of this clause nor any act or failure to act by the Government shall relieve the Contractor of any responsibility or liability for the safety of Government, Contractor, or subcontractor personnel or property.

(g) Nothing contained in this clause shall relieve the Contractor from complying with applicable Federal, State, and local laws, codes, ordinances, and regulations (including the obtaining of licenses and permits) in connection with hazardous material.

(h) The Government's rights in data furnished under this contract with respect to hazardous material are as follows:

(1) To use, duplicate and disclose any data to which this clause is applicable. The purposes of this right are to--

(i) Apprise personnel of the hazards to which they may be exposed in using, handling, packaging, transporting, or disposing of hazardous materials;

(ii) Obtain medical treatment for those affected by the material; and

(iii) Have others use, duplicate, and disclose the data for the Government for these purposes.

(2) To use, duplicate, and disclose data furnished under this clause, in accordance with subparagraph (h)(1) of this clause, in precedence over any other clause of this contract providing for rights in data.

(3) The Government is not precluded from using similar or identical data acquired from other sources.

(End of clause)

52.223-6 DRUG-FREE WORKPLACE (MAR 2001)

(a) Definitions. As used in this clause --

"Controlled substance" means a controlled substance in schedules I through V of section 202 of the Controlled Substances Act (21 U.S.C. 812) and as further defined in regulation at 21 CFR 1308.11 - 1308.15.

"Conviction" means a finding of guilt (including a plea of nolo contendere) or imposition of sentence, or both, by any judicial body charged with the responsibility to deter- mine violations of the Federal or State criminal drug statutes.

"Criminal drug statute" means a Federal or non-Federal criminal statute involving the manufacture, distribution, dispensing, possession, or use of any controlled substance.

"Drug-free workplace" means the site(s) for the performance of work done by the Contractor in connection with a specific contract where employees of the Contractor are prohibited from engaging in the unlawful manufacture, distribution, dispensing, possession, or use of a controlled substance.

"Employee" means an employee of a Contractor directly engaged in the performance of work under a Government contract. "Directly engaged" is defined to include all direct cost employees and any other Contractor employee who has other than a minimal impact or involvement in contract performance.

"Individual" means an offeror/contractor that has no more than one employee including the offeror/contractor.

(b) The Contractor, if other than an individual, shall-- within 30 days after award (unless a longer period is agreed to in writing for contracts of 30 days or more performance duration), or as soon as possible for contracts of less than 30 days performance duration--

(1) Publish a statement notifying its employees that the unlawful manufacture, distribution, dispensing, possession, or use of a controlled substance is prohibited in the Contractor's workplace and specifying the actions that will be taken against employees

for violations of such prohibition;

(2) Establish an ongoing drug-free awareness program to inform such employees about--

(i) The dangers of drug abuse in the workplace;

(ii) The Contractor's policy of maintaining a drug-free workplace;

(iii) Any available drug counseling, rehabilitation, and employee assistance programs; and

(iv) The penalties that may be imposed upon employees for drug abuse violations occurring in the workplace;

(3) Provide all employees engaged in performance of the contract with a copy of the statement required by subparagraph (b)(1) of this clause;

(4) Notify such employees in writing in the statement required by subparagraph (b)(1) of this clause that, as a condition of continued employment on this contract, the employee will--

(i) Abide by the terms of the statement; and

(ii) Notify the employer in writing of the employee's conviction under a criminal drug statute for a violation occurring in the workplace no later than 5 days after such conviction.

(5) Notify the Contracting Officer in writing within 10 days after receiving notice under subdivision (b)(4)(ii) of this clause, from an employee or otherwise receiving actual notice of such conviction. The notice shall include the position title of the employee;

(6) Within 30 days after receiving notice under subdivision (b)(4)(ii) of this clause of a conviction, take one of the following actions with respect to any employee who is convicted of a drug abuse violation occurring in the workplace:

(i) Taking appropriate personnel action against such employee, up to and including termination; or

(ii) Require such employee to satisfactorily participate in a drug abuse assistance or rehabilitation program approved for such purposes by a Federal, State, or local health, law enforcement, or other appropriate agency; and

(7) Make a good faith effort to maintain a drug-free workplace through implementation of subparagraphs (b)(1) though (b)(6) of this clause.

(c) The Contractor, if an individual, agrees by award of the contract or acceptance of a

purchase order, not to engage in the unlawful manufacture, distribution, dispensing, possession, or use of a controlled substance while performing this contract.

(d) In addition to other remedies available to the Government, the Contractor's failure to comply with the requirements of paragraph (b) or (c) of this clause may, pursuant to FAR 23.506, render the Contractor subject to suspension of contract payments, termination of the contract for default, and suspension or debarment.

(End of clause)

52.223-14 TOXIC CHEMICAL RELEASE REPORTING (OCT 2000)

(a) Unless otherwise exempt, the Contractor, as owner or operator of a facility used in the performance of this contract, shall file by July 1 for the prior calendar year an annual Toxic Chemical Release Inventory Form (Form R) as described in sections 313(a) and (g) of the Emergency Planning and Community Right-to-Know Act of 1986 (EPCRA) (42 U.S.C. 11023(a) and (g)), and section 6607 of the Pollution Prevention Act of 1990 (PPA) (42 U.S.C. 13106). The Contractor shall file, for each facility subject to the Form R filing and reporting requirements, the annual Form R throughout the life of the contract.

(b) A Contractor owned or operated facility used in the performance of this contract is exempt from the requirement to file an annual Form R if--

(1) The facility does not manufacture, process, or otherwise use any toxic chemicals listed under section 313(c) of EPCRA, 42 U.S.C. 11023(c);

(2) The facility does not have 10 or more full-time employees as specified in section 313(b)(1)(A) of EPCRA, 42 U.S.C. 11023(b)(1)(A);

(3) The facility does not meet the reporting thresholds of toxic chemicals established under of EPCRA, 42 U.S.C. 11023(f) (including the alternate thresholds at 40 CFR 372.27, provided an appropriate certification form has been filed with EPA);

(4) The facility does not fall within Standard Industrial Classification Code (SIC) major groups 20 through 39 or their corresponding North American Industry Classification System (NAICS) sectors 31 through 33; or

(5) The facility is not located within any State of the United States, the District of Columbia, the Commonwealth of Puerto Rico, Guam, American Samoa, the United States Virgin Islands, the Northern Mariana Islands, or any other territory or possession over which the United States has jurisdiction.

(c) If the Contractor has certified to an exemption in accordance with one or more of the criteria in paragraph (b) of this clause, and after award of the contract circumstances

change so that any of its owned or operated facilities used in the performance of this contract is no longer exempt--

(1) The Contractor shall notify the Contracting Officer; and

(2) The Contractor, as owner or operator of a facility used in the performance of this contract that is no longer exempt, shall (i) submit a Toxic Chemical Release Inventory Form (Form R) on or before July 1 for the prior calendar year during which the facility becomes eligible; and (ii) continue to file the annual Form R for the life of the contract for such facility.

(d) The Contracting Officer may terminate this contract or take other action as appropriate, if the Contractor fails to comply accurately and fully with the EPCRA and PPA toxic chemical release filing and reporting requirements.

(e) Except for acquisitions of commercial items, as defined in FAR Part 2, the Contractor shall--

(1) For competitive subcontracts expected to exceed $100,000 (including all options), include a solicitation provision substantially the same as the provision at FAR 52.223-13, Certification of Toxic Chemical Release Reporting; and

(2) Include in any resultant subcontract exceeding $100,000 (including all options), the substance of this clause, except this paragraph (e).

52.225-5 TRADE AGREEMENTS (APR 2000)

(a) Definitions. As used in this clause.

Caribbean Basin country means any of the following countries: Antigua and Barbuda, Aruba, Bahamas, Barbados, Belize, British Virgin Islands, Costa Rica, Dominica, El Salvador, Grenada, Guatemala, Guyana, Haiti, Jamaica, Montserrat, Netherlands Antilles, Nicaragua, Panama, St. Kitts and Nevis, St. Lucia, St. Vincent and the Grenadines, Trinidad and Tobago.

Caribbean Basin country end product means an article that--

(1) Is wholly the growth, product, or manufacture of a Caribbean Basin country; or

(2) In the case of an article that consists in whole or in part of materials from another country, has been substantially transformed in a Caribbean Basin country into a new and different article of commerce with a name, character, or use distinct from that of the article or articles from which it was transformed. The term refers to a product offered for purchase under a supply contract, but for purposes of calculating the value of the end product includes services (except transportation services) incidental to the article,

provided that the value of those incidental services does not exceed that of the article itself. The term excludes products that are excluded from duty-free treatment for Caribbean countries under 19 U.S.C. 2703(b), which presently are--

(i) Textiles and apparel articles that are subject to textile agreements;

(ii) Footwear, handbags, luggage, flat goods, work gloves, and leather wearing apparel not designated as eligible articles for the purpose of the Generalized System of Preferences under Title V of the Trade Act of 1974;

(iii) Tuna, prepared or preserved in any manner in airtight containers;

(iv) Petroleum, or any product derived from petroleum; and

(v) Watches and watch parts (including cases, bracelets, and straps) of whatever type including, but not limited to, mechanical, quartz digital, or quartz analog, if such watches or watch parts contain any material that is the product of any country to which the Harmonized Tariff Schedule of the United States (HTSUS) column 2 rates of duty apply.

Designated country means any of the following countries: Aruba, Austria, Bangladesh Belgium, Benin, Bhutan, Botswana, Burkina Faso, Burundi, Canada, Cape Verde, Central African Republic, Chad, Comoros, Denmark, Djibouti, Equatorial Guinea.

Finland, France, Gambia, Germany, Greece, Guinea, Guinea-Bissau, Haiti, Hong Kong, Ireland, Israel, Italy, Japan.

Kiribati, Korea, Republic of Lesotho, Liechtenstein, Luxembourg, Malawi, Maldives, Mali, Mozambique, Nepal, Netherlands, Niger, Norway, Portugal, Rwanda.

Sao Tome and Principe, Sierra Leone, Singapore, Somalia, Spain, Sweden, Switzerland, Tanzania U.R., Togo, Tuvalu, Uganda, United Kingdom, Vanuatu, Western Samoa, Yemen.

Designated country end product means an article that--

(1) Is wholly the growth, product, or manufacture of a designated country; or

(2) In the case of an article that consists in whole or in part of materials from another country, has been substantially transformed in a designated country into a new and different article of commerce with a name, character, or use distinct from that of the article or articles from which it was transformed. The term refers to a product offered for purchase under a supply contract, but for purposes of calculating the value of the end product includes services, (except transportation services) incidental to the article, provided that the value of those incidental services does not exceed that of the article itself.

End product means supplies delivered under a line item of a Government contract.

North American Free Trade Agreement country means Canada or Mexico.

North American Free Trade Agreement country end product means an article that--

(1) Is wholly the growth, product, or manufacture of a North American Free Trade Agreement (NAFTA) country; or

(2) In the case of an article that consists in whole or in part of materials from another country, has been substantially transformed in a NAFTA country into a new and different article of commerce with a name, character, or use distinct from that of the article or articles from which it was transformed. The term refers to a product offered for purchase under a supply contract, but for purposes of calculating the value of the end product includes services, (except transportation services) incidental to the article, provided that the value of those incidental services does not exceed that of the article itself.

United States means the 50 States and the District of Columbia, U.S. territories and possessions, Puerto Rico, the Northern Mariana Islands, and any other place subject to U.S. jurisdiction, but does not include leased bases.

U.S.-made end product means an article that is mined, produced, or manufactured in the United States or that is substantially transformed in the United States into a new and different article of commerce with a name, character, or use distinct from that of the article or articles from which it was transformed.,

(b) Implementation. This clause implements the Trade, Agreements Act (19 U.S.C. 2501, et seq.) and the North American Free Trade Agreement Implementation Act of 1993, (NAFTA) (19 U.S.C. 3301 note), by restricting the acquisition of end products that are not U.S.-made, designated country, Caribbean Basin country, or NAFTA country end products.,

(c) Delivery of end products. The Contracting Officer has determined that the Trade Agreements Act and NAFTA apply to this acquisition. Unless otherwise specified, these trade agreements apply to all items in the Schedule. The Contractor shall deliver under this contract only U.S.-made, designated country, Caribbean Basin country, or NAFTA country end products except to the extent that, in its offer, it specified delivery of other end products in the provision entitled “Trade Agreements Certificate.”

(End of clause)

52.225-9 BUY AMERICAN ACT--BALANCE OF PAYMENTS PROGRAM—CONSTRUCTION MATERIALS (FEB 2000)

(a) Definitions. As used in this clause--

Component means any article, material, or supply incorporated directly into construction materials.

Construction material means an article, material, or supply brought to the construction site by the Contractor or a subcontractor for incorporation into the building or work. The term also includes an item brought to the site preassembled from articles, materials, or supplies. However, emergency life safety systems, such as emergency lighting, fire alarm, and audio evacuation systems, that are discrete systems incorporated into a public building or work and that are produced as complete systems, are evaluated as a single and distinct construction material regardless of when or how the individual parts or components of those systems are delivered to the construction site. Materials purchased directly by the Government are supplies, not construction material.

Cost of components means--

(1) For components purchased by the Contractor, the acquisition cost, including transportation costs to the place of incorporation into the end product (whether or not such costs are paid to a domestic firm), and any applicable duty (whether or not a duty-free entry certificate is issued); or

(2) For components manufactured by the Contractor, all costs associated with the manufacture of the component, including transportation costs as described in paragraph (1) of this definition, plus allocable overhead costs, but excluding profit. Cost of components does not include any costs associated with the manufacture of the end product.

Domestic construction material means--

(1) An unmanufactured construction material mined or produced in the United States; or

(2) A construction material manufactured in the United States, if the cost of its components mined, produced, or manufactured in the United States exceeds 50 percent of the cost of all its components. Components of foreign origin of the same class or kind for which nonavailability determinations have been made are treated as domestic.

Foreign construction material means a construction material other than a domestic construction material.

United States means the 50 States and the District of Columbia, U.S. territories and possessions, Puerto Rico, the Northern Mariana Islands, and any other place subject to U.S. jurisdiction, but does not include leased bases.

(b) Domestic preference. (1) This clause implements the Buy American Act (41 U.S.C. 10a-10d) and the Balance of Payments Program by providing a preference for domestic

construction material. The Contractor shall use only domestic construction material in performing this contract, except as provided in paragraphs (b)(2) and (b)(3) of this clause.

(2) This requirement does not apply to the construction material or components listed by the Government as follows: NONE

(3) The Contracting Officer may add other foreign construction material to the list in paragraph (b)(2) of this clause if the Government determines that

(i) The cost of domestic construction material would be unreasonable. The cost of a particular domestic construction material subject to the requirements of the Buy American Act is unreasonable when the cost of such material exceeds the cost of foreign material by more than 6 percent. For determination of unreasonable cost under the Balance of Payments Program, the Contracting Officer will use a factor of 50 percent;

(ii) The application of the restriction of the Buy American Act or Balance of Payments Program to a particular construction material would be impracticable or inconsistent with the public interest; or

(iii) The construction material is not mined, produced, or manufactured in the United States in sufficient and reasonably available commercial quantities of a satisfactory quality.

(c) Request for determination of inapplicability of the Buy American Act or Balance of Payments Program. (1)(i) Any Contractor request to use foreign construction material in accordance with paragraph (b)(3) of this clause shall include adequate information for Government evaluation of the request, including--

(A) A description of the foreign and domestic construction materials;

(B) Unit of measure;

(C) Quantity;

(D) Price;

(E) Time of delivery or availability;

(F) Location of the construction project;

(G) Name and address of the proposed supplier; and

(H) A detailed justification of the reason for use of foreign construction materials cited in accordance with paragraph (b)(3) of this clause.

(ii) A request based on unreasonable cost shall include a reasonable survey of the market and a completed price comparison table in the format in paragraph (d) of this clause.

(iii) The price of construction material shall include all delivery costs to the construction site and any applicable duty (whether or not a duty-free certificate may be issued).

(iv) Any Contractor request for a determination submitted after contract award shall explain why the Contractor could not reasonably foresee the need for such determination and could not have requested the determination before contract award. If the Contractor does not submit a satisfactory explanation, the Contracting Officer need not make a determination.

(2) If the Government determines after contract award that an exception to the Buy American Act or Balance of Payments Program applies and the Contracting Officer and the Contractor negotiate adequate consideration, the Contracting Officer will modify the contract to allow use of the foreign construction material. However, when the basis for the exception is the unreasonable price of a domestic construction material, adequate consideration is not less than the differential established in paragraph (b)(3)(i) of this clause.

(3) Unless the Government determines that an exception to the Buy American Act or Balance of Payments Program applies, use of foreign construction material is noncompliant with the Buy American Act or Balance of Payments Program.

(d) Data. To permit evaluation of requests under paragraph (c) of this clause based on unreasonable cost, the Contractor shall include the following information and any applicable supporting data based on the survey of suppliers:

Foreign and Domestic Construction Materials Price Comparison

Construction material description	Unit of measure	Quantity	Price (dollars) \1\
Item 1			
Foreign construction material....	.....	.....	.....
Domestic construction material...	.....	.....	.....
Item 2			
Foreign construction material....	.....	.....	.....
Domestic construction material...	.....	.....	.....

Include all delivery costs to the construction site and any applicable duty (whether or not a duty-free entry certificate is issued).

List name, address, telephone number, and contact for suppliers surveyed. Attach copy of response; if oral, attach summary.

Include other applicable supporting information.

(End of clause)

52.225-13 RESTRICTIONS ON CERTAIN FOREIGN PURCHASES (JUL 2000)

(a) The Contractor shall not acquire, for use in the performance of this contract, any supplies or services originating from sources within, or that were located in or transported from or through, countries whose products are banned from importation into the United States under regulations of the Office of Foreign Assets Control, Department of the Treasury. Those countries are Cuba, Iran, Iraq, Libya, North Korea, Sudan, the territory of Afghanistan controlled by the Taliban, and Serbia (excluding the territory of Kosovo).

(b) The Contractor shall not acquire for use in the performance of this contract any supplies or services from entities controlled by the government of Iraq.

(c) The Contractor shall insert this clause, including this paragraph (c), in all subcontracts.

(End of clause)

52.225-15 SANCTIONED EUROPEAN UNION COUNTRY END PRODUCTS (FEB 2000)

(a) Definitions. As used in this clause--

Sanctioned European Union country end product means an article that--

(1) Is wholly the growth, product, or manufacture of a sanctioned European Union (EU) member state; or

(2) In the case of an article that consists in whole or in part of materials from another country, has been substantially transformed in a sanctioned EU member state into a new and different article of commerce with a name, character, or use distinct from that of the article or articles from which it was transformed. The term refers to a product offered for purchase under a supply contract, but for purposes of calculating the value of the end product includes services (except transportation services) incidental to the article, provided that the value of those incidental services does not exceed that of the article itself.

Sanctioned European Union member state means Austria, Belgium, Denmark, Finland, France, Ireland, Italy, Luxembourg, the Netherlands, Sweden, or the United Kingdom.

(b) The Contractor shall not deliver any sanctioned European Union country end products under this contract.

(End of clause)

52.226-1 UTILIZATION OF INDIAN ORGANIZATIONS AND INDIAN-OWNED ECONOMIC ENTERPRISES (JUN 2000)

(a) Definitions. As used in this clause:

"Indian" means any person who is a member of any Indian tribe, band, group, pueblo or community that is recognized by the Federal Government as eligible for services from the Bureau of Indian Affairs (BIA) in accordance with 25 U.S.C. 1452(c) and any ``Native" as defined in the Alaska Native Claims Settlement Act (43 U.S.C. 1601).

"Indian organization" means the governing body of any Indian tribe or entity established or recognized by the governing body of an Indian tribe for the purposes of 25 U.S.C., chapter 17.

"Indian-owned economic enterprise" means any Indian-owned (as determined by the Secretary of the Interior) commercial, industrial, or business activity established or organized for the purpose of profit, provided that Indian ownership constitutea not less than 51 percent of the enterprise.

"Indian tribe" means any Indian tribe, band, group, pueblo or community, including native villages and native groups (including corporations organized by Kenai, Juneau, Sitka, and Kodiak) as defined in the Alaska Native Claims Settlement Act, that is recognized by the Federal Government as eligible for services from BIA in accordance with 25 U.S.C. 1542(c).

"Interested party" means a prime contractor or an actual or prospective offeror whose direct economic interest would be affected by the award of a subcontract or by the failure to award a subcontract.

(b) The Contractor shall use its best efforts to give Indian organizations and Indian-owned economic enterprises (25 U.S.C. 1544) the maximum practicable opportunity to participate in the subcontracts it awards to the fullest extent consistent with efficient performance of its contract.

(1) The Contracting Officer and the Contractor, acting in good faith, may rely on the representation of an Indian organization or Indian-owned economic enterprise as to its eligibility, unless an
interested party challenges its status or the Contracting Officer has independent reason to question that status. In the event of a challenge to the representation of a subcontractor,

the Contracting Officer will refer the matter to the U.S. Department of the Interior, Bureau of Indian Affairs (BIA), Attn: Chief, Division of Contracting and Grants Administration, 1849 C Street, NW., MS 2626-MIB, Washington, DC 20240-4000.

The BIA will determine the eligibility and notify the Contracting Officer. No incentive payment will be made within 50 working days of subcontract award or while a challenge is pending. If a subcontractor is determined to be an ineligible participant, no incentive payment will be made under the Indian Incentive Program.

(2) The Contractor may request an adjustment under the Indian Incentive Program to the following:

(i) The estimated cost of a cost-type contract.

(ii) The target cost of a cost-plus-incentive-fee prime contract.

(iii) The target cost and ceiling price of a fixed-price incentive prime contract.

(iv) The price of a firm-fixed-price prime contract.

(3) The amount of the adjustment to the prime contract is 5 percent of the estimated cost, target cost, or firm-fixed-price included in the subcontract initially awarded to the Indian organization or Indian-owned economic enterprise.

(4) The Contractor has the burden of proving the amount claimed and must assert its request for an adjustment prior to completion of contract performance.

(c) The Contracting Officer, subject to the terms and conditions of the contract and the availability of funds, will authorize an incentive payment of 5 percent of the amount paid to the subcontractor. The Contracting Officer will seek funding in accordance with agency procedures.

(End of clause)

52.227-1 AUTHORIZATION AND CONSENT (JUL 1995)

(a) The Government authorizes and consents to all use and manufacture, in performing this contract or any subcontract at any tier, of any invention described in and covered by a United States patent (1) embodied in the structure or composition of any article the delivery of which is accepted by the Government under this contract or (2) used in machinery, tools, or methods whose use necessarily results from compliance by the Contractor or a subcontractor with (i) specifications or written provisions forming a part of this contract or (ii) specific written instructions given by the Contracting Officer directing the manner of performance. The entire liability to the Government for

infringement of a patent of the United States shall be determined solely by the provisions of the indemnity clause, if any, included in this contract or any subcontract hereunder (including any lower-tier subcontract), and the Government assumes liability for all other infringement to the extent of the authorization and consent hereinabove granted.

(b) The Contractor agrees to include, and require inclusion of, this clause, suitably modified to identify the parties, in all subcontracts at any tier for supplies or services (including construction, architect-engineer services, and materials, supplies, models, samples, and design or testing services expected to exceed the simplified acquisition threshold (however, omission of this clause from any subcontract, including those at or below the simplified acquisition threshold, does not affect this authorization and consent.)

52.227-2 NOTICE AND ASSISTANCE REGARDING PATENT AND COPYRIGHT INFRINGEMENT (AUG 1996)

(a) The Contractor shall report to the Contracting Officer, promptly and in reasonable written detail, each notice or claim of patent or copyright infringement based on the performance of this contract of which the Contractor has knowledge.

(b) In the event of any claim or suit against the Government on account of any alleged patent or copyright infringement arising out of the performance of this contract or out of the use of any supplies furnished or work or services performed under this contract, the Contractor shall furnish to the Government, when requested by the Contracting Officer, all evidence and information in possession of the Contractor pertaining to such suit or claim. Such evidence and information shall be furnished at the expense of the Government except where the Contractor has agreed to indemnify the Government.

(c) The Contractor agrees to include, and require inclusion of, this clause in all subcontracts at any tier for supplies or services (including construction and architect-engineer subcontracts and those for material, supplies, models, samples, or design or testing services) expected to exceed the simplified acquisition threshold at (FAR) 2.101.to exceed the dollar amount set forth in 13.000 of the Federal Acquisition Regulation (FAR).

(End of clause)

52.227-4 PATENT INDEMNITY--CONSTRUCTION CONTRACTS (APR 1984)

Except as otherwise provided, the Contractor agrees to indemnify the Government and its officers, agents, and employees against liability, including costs and expenses, for infringement upon any United States patent (except a patent issued upon an application that is now or may hereafter be withheld from issue pursuant to a Secrecy Order under 35 U.S.C. 181) arising out of performing this contract or out of the use or disposal by or for

the account of the Government of supplies furnished or work performed under this contract.

52.228-1 BID GUARANTEE (SEP 1996)

(a) Failure to furnish a bid guarantee in the proper form and amount, by the time set for opening of bids, may be cause for rejection of the bid.

(b) The bidder shall furnish a bid guarantee in the form of a firm commitment, e.g., bid bond supported by good and sufficient surety or sureties acceptable to the Government, postal money order, certified check, cashier's check, irrevocable letter of credit, or, under Treasury Department regulations, certain bonds or notes of the United States. The Contracting Officer will return bid guarantees, other than bid bonds, (1) to unsuccessful bidders as soon as practicable after the opening of bids, and (2) to the successful bidder upon execution of contractual documents and bonds (including any necessary coinsurance or reinsurance agreements), as required by the bid as accepted.

(c) The amount of the bid guarantee shall be twenty (20) percent of the bid price or $3,000,000, whichever is less.

(d) If the successful bidder, upon acceptance of its bid by the Government within the period specified for acceptance, fails to execute all contractual documents or furnish executed bond(s) within 10 days after receipt of the forms by the bidder, the Contracting Officer may terminate the contract for default.

(e) In the event the contract is terminated for default, the bidder is liable for any cost of acquiring the work that exceeds the amount of its bid, and the bid guarantee is available to offset the difference.

52.228-2 ADDITIONAL BOND SECURITY (OCT 1997)

The Contractor shall promptly furnish additional security required to protect the Government and persons supplying labor or materials under this contract if--

(a) Any surety upon any bond, or issuing financial institution for other security, furnished with this contract becomes unacceptable to the Government.

(b) Any surety fails to furnish reports on its financial condition as required by the Government;

(c) The contract price is increased so that the penal sum of any bond becomes inadequate in the opinion of the Contracting Officer; or

(d) An irrevocable letter of credit (ILC) used as security will expire before the end of the

period of required security. If the Contractor does not furnish an acceptable extension or replacement ILC, or other acceptable substitute, at least 30 days before an ILC's scheduled expiration, the Contracting officer has the right to immediately draw on the ILC.

52.228-11 PLEDGES OF ASSETS (FEB 1992)

(a) Offerors shall obtain from each person acting as an individual surety on a bid guarantee, a performance bond, or a payment bond--

(1) Pledge of assets; and

(2) Standard Form 28, Affidavit of Individual Surety.

(b) Pledges of assets from each person acting as an individual surety shall be in the form of--

(1) Evidence of an escrow account containing cash, certificates of deposit, commercial or Government securities, or other assets described in FAR 28.203-2 (except see 28.203-2(b)(2) with respect to Government securities held in book entry form) and/or;

(2) A recorded lien on real estate. The offeror will be required to provide--

(i) Evidence of title in the form of a certificate of title prepared by a title insurance company approved by the United States Department of Justice. This title evidence must show fee simple title vested in the surety along with any concurrent owners; whether any real estate taxes are due and payable; and any recorded encumbrances against the property, including the lien filed in favor of the Government as required by FAR 28.203-3(d);

(ii) Evidence of the amount due under any encumbrance shown in the evidence of title;

(iii) A copy of the current real estate tax assessment of the property or a current appraisal dated no earlier than 6 months prior to the date of the bond, prepared by a professional appraiser who certifies that the appraisal has been conducted in accordance with the generally accepted appraisal standards as reflected in the Uniform Standards of Professional Appraisal Practice, as promulgated by the Appraisal Foundation.

(End of clause)

52.228-12 PROSPECTIVE SUBCONTRACTOR REQUESTS FOR BONDS. (OCT 1995)

In accordance with Section 806(a)(3) of Pub. L. 102-190, as amended by Sections 2091

and 8105 of Pub. L. 103-355, upon the request of a prospective subcontractor or supplier offering to furnish labor or material for the performance of this contract for which a payment bond has been furnished to the Government pursuant to the Miller Act, the Contractor shall promptly provide a copy of such payment bond to the requester.

52.228-14 IRREVOCABLE LETTER OF CREDIT (DEC 1999)

(a) "Irrevocable letter of credit" (ILC), as used in this clause, means a written commitment by a federally insured financial institution to pay all or part of a stated amount of money, until the expiration date of the letter, upon presentation by the Government (the beneficiary) of a written demand therefor. Neither the financial institution nor the offeror/Contractor can revoke or condition the letter of credit.

(b) If the offeror intends to use an ILC in lieu of a bid bond, or to secure other types of bonds such as performance and payment bonds, the letter of credit and letter of confirmation formats in paragraphs (e) and (f) of this clause shall be used.

(c) The letter of credit shall be irrevocable, shall require presentation of no document other than a written demand and the ILC (including confirming letter, if any), shall be issued/confirmed by an acceptable federally insured financial institution as provided in paragraph (d) of this clause, and--

(1) If used as a bid guarantee, the ILC shall expire no earlier than 60 days after the close of the bid acceptance period;

(2) If used as an alternative to corporate or individual sureties as security for a performance or payment bond, the offeror/Contractor may submit an ILC with an initial expiration date estimated to cover the entire period for which financial security is required or may submit an ILC with an initial expiration date that is a minimum period of one year from the date of issuance. The ILC shall provide that, unless the issuer provides the beneficiary written notice of non-renewal at least 60 days in advance of the current expiration date, the ILC is automatically extended without amendment for one year from the expiration date, or any future expiration date, until the period of required coverage is completed and the Contracting Officer provides the financial institution with a written statement waiving the right to payment. The period of required coverage shall be:

(i) For contracts subject to the Miller Act, the later of--

(A) One year following the expected date of final payment;

(B) For performance bonds only, until completion of any warranty period; or

(C) For payment bonds only, until resolution of all claims filed against the payment bond during the one-year period following final payment.

(ii) For contracts not subject to the Miller Act, the later of--

(A) 90 days following final payment; or

(B) For performance bonds only, until completion of any warranty period.

(d) Only federally insured financial institutions rated investment grade or higher shall issue or confirm the ILC. The offeror/Contractor shall provide the Contracting Officer a credit rating that indicates the financial institution has the required rating(s) as of the date of issuance of the ILC. Unless the financial institution issuing the ILC had letter of credit business of less than $25 million in the past year, ILCs over $5 million must be confirmed by another acceptable financial institution that had letter of credit business of less than $25 million in the past year.

(e) The following format shall be used by the issuing financial institution to create an ILC:

_____

[Issuing Financial Institution's Letterhead or Name and Address]

Issue Date _____

IRREVOCABLE LETTER OF CREDIT NO. _____

Account party's name _____

Account party's address _____

For Solicitation No. _____(for reference only)

TO: [U.S. Government agency]

[U.S. Government agency's address]

1. We hereby establish this irrevocable and transferable Letter of Credit in your favor for one or more drawings up to United States $_____. This Letter of Credit is payable at [issuing financial institution's and, if any, confirming financial institution's] office at [issuing financial institution's address and, if any, confirming financial institution's address] and expires with our close of business on _____, or any automatically extended expiration date.

2. We hereby undertake to honor your or the transferee's sight draft(s) drawn on the issuing or, if any, the confirming financial institution, for all or any part of this credit if presented with this Letter of Credit and confirmation, if any, at the office specified in paragraph 1 of this Letter of Credit on or before the expiration date or any automatically

extended expiration date.

3. [This paragraph is omitted if used as a bid guarantee, and subsequent paragraphs are renumbered.] It is a condition of this Letter of Credit that it is deemed to be automatically extended without amendment for one year from the expiration date hereof, or any future expiration date, unless at least 60 days prior to any expiration date, we notify you or the transferee by registered mail, or other receipted means of delivery, that we elect not to consider this Letter of Credit renewed for any such additional period. At the time we notify you, we also agree to notify the account party (and confirming financial institution, if any) by the same means of delivery.

4. This Letter of Credit is transferable. Transfers and assignments of proceeds are to be effected without charge to either the beneficiary or the transferee/assignee of proceeds. Such transfer or assignment shall be only at the written direction of the Government (the beneficiary) in a form satisfactory to the issuing financial institution and the confirming financial institution, if any.

5. This Letter of Credit is subject to the Uniform Customs and Practice (UCP) for Documentary Credits, 1993 Revision, International Chamber of Commerce Publication No. 500, and to the extent not inconsistent therewith, to the laws of _____ [state of confirming financial institution, if any, otherwise state of issuing financial institution].

6. If this credit expires during an interruption of business of this financial institution as described in Article 17 of the UCP, the financial institution specifically agrees to effect payment if this credit is drawn against within 30 days after the resumption of our business.

Sincerely,

_____

[Issuing financial institution]

(f) The following format shall be used by the financial institution to confirm an ILC:

_____
[Confirming Financial Institution's Letterhead or Name and Address]

(Date) _____

Our Letter of Credit Advice Number _____

Beneficiary: _____ [U.S. Government agency]

Issuing Financial Institution: _____

Issuing Financial Institution's LC No.: _____

Gentlemen:

1. We hereby confirm the above indicated Letter of Credit, the original of which is attached, issued by _____ [name of issuing financial institution] for drawings of up to United States dollars _____/U.S. $_____ and expiring with our close of business on _____ [the expiration date], or any automatically extended expiration date.

2. Draft(s) drawn under the Letter of Credit and this Confirmation are payable at our office located at _____.

3. We hereby undertake to honor sight draft(s) drawn under and presented with the Letter of Credit and this Confirmation at our offices as specified herein.

4. [This paragraph is omitted if used as a bid guarantee, and subsequent paragraphs are renumbered.] It is a condition of this confirmation that it be deemed automatically extended without amendment for one year from the expiration date hereof, or any automatically extended expiration date, unless:

(a) At least 60 days prior to any such expiration date, we shall notify the Contracting Officer, or the transferee and the issuing financial institution, by registered mail or other receipted means of delivery, that we elect not to consider this confirmation extended for any such additional period; or

(b) The issuing financial institution shall have exercised its right to notify you or the transferee, the account party, and ourselves, of its election not to extend the expiration date of the Letter of Credit.

5. This confirmation is subject to the Uniform Customs and Practice (UCP) for Documentary Credits, 1993 Revision, International Chamber of Commerce Publication No. 500, and to the extent not inconsistent therewith, to the laws of _____ [state of confirming financial institution].

6. If this confirmation expires during an interruption of business of this financial institution as described in Article 17 of the UCP, we specifically agree to effect payment if this credit is drawn against within 30 days after the resumption of our business.

Sincerely,

_____

[Confirming financial institution]

(g) The following format shall be used by the Contracting Officer for a sight draft to draw on the Letter of Credit:

SIGHT DRAFT

_____

[City, State]

(Date) _____

[Name and address of financial institution]

Pay to the order of _____ [Beneficiary Agency] _____ the sum of United States $_____. This draft is drawn under Irrevocable Letter of Credit No. _____.

_____

[Beneficiary Agency]

By: _____

(End of clause)

52.228-15 PERFORMANCE AND PAYMENT BONDS--CONSTRUCTION (JUL 2000)-

(a) Definitions. As used in this clause--

Original contract price means the award price of the contract; or, for requirements contracts, the price payable for the estimated total quantity; or, for indefinite-quantity contracts, the price payable for the specified minimum quantity. Original contract price does not include the price of any options, except those options exercised at the time of contract award.

(b) Amount of required bonds. Unless the resulting contract price is $100,000 or less, the successful offeror shall furnish performance and payment bonds to the Contracting Officer as follows:

(1) Performance bonds (Standard Form 25). The penal amount of performance bonds at the time of contract award shall be 100 percent of the original contract price.

(2) Payment Bonds (Standard Form 25-A). The penal amount of payment bonds at the time of contract award shall be 100 percent of the original contract price.

(3) Additional bond protection. (i) The Government may require additional performance and payment bond protection if the contract price is increased. The increase in protection generally will equal 100 percent of the increase in contract price.

(ii) The Government may secure the additional protection by directing the Contractor to increase the penal amount of the existing bond or to obtain an additional bond.

(c) Furnishing executed bonds. The Contractor shall furnish all executed bonds, including any necessary reinsurance agreements, to the Contracting Officer, within the time period specified in the Bid Guarantee provision of the solicitation, or otherwise specified by the Contracting Officer, but in any event, before starting work.

(d) Surety or other security for bonds. The bonds shall be in the form of firm commitment, supported by corporate sureties whose names appear on the list contained in Treasury Department Circular 570, individual sureties, or by other acceptable security such as postal money order, certified check, cashier's check, irrevocable letter of credit, or, in accordance with Treasury Department regulations, certain bonds or notes of the United States. Treasury Circular 570 is published in the Federal Register or may be obtained from the U.S. Department of Treasury, Financial Management Service, Surety Bond Branch, 401 14th Street, NW, 2nd Floor, West Wing, Washington, DC 20227.

(e) Notice of subcontractor waiver of protection (40 U.S.C. 270b(c). Any waiver of the right to sue on the payment bond is void unless it is in writing, signed by the person whose right is waived, and executed after such person has first furnished labor or material for use in the performance of the contract.

(End of clause)

52.229-3 FEDERAL, STATE, AND LOCAL TAXES (JAN 1991)

(a) "Contract date," as used in this clause, means the date set for bid opening or, if this is a negotiated contract or a modification, the effective date of this contract or modification.

"All applicable Federal, State, and local taxes and duties," as used in this clause, means all taxes and duties, in effect on the contract date, that the taxing authority is imposing and collecting on the transactions or property covered by this contract.

"After-imposed Federal tax," as used in this clause, means any new or increased Federal excise tax or duty, or tax that was exempted or excluded on the contract date but whose exemption was later revoked or reduced during the contract period, on the transactions or property covered by this contract that the Contractor is required to pay or bear as the result of legislative, judicial, or administrative action taking effect after the contract date. It does not include social security tax or other employment taxes.
"After-relieved Federal tax," as used in this clause, means any amount of Federal excise

tax or duty, except social security or other employment taxes, that would otherwise have been payable on the transactions or property covered by this contract, but which the Contractor is not required to pay or bear, or for which the Contractor obtains a refund or drawback, as the result of legislative, judicial, or administrative action taking effect after the contract date.

(b) The contract price includes all applicable Federal, State, and local taxes and duties.

(c) The contract price shall be increased by the amount of any after-imposed Federal tax, provided the Contractor warrants in writing that no amount for such newly imposed Federal excise tax or duty or rate increase was included in the contract price, as a contingency reserve or otherwise.

(d) The contract price shall be decreased by the amount of any after-relieved Federal tax.

(e) The contract price shall be decreased by the amount of any Federal excise tax or duty, except social security or other employment taxes, that the Contractor is required to pay or bear, or does not obtain a refund of, through the Contractor's fault, negligence, or failure to follow instructions of the Contracting Officer.

(f) No adjustment shall be made in the contract price under this clause unless the amount of the adjustment exceeds $250.

(g) The Contractor shall promptly notify the Contracting Officer of all matters relating to any Federal excise tax or duty that reasonably may be expected to result in either an increase or decrease in the contract price and shall take appropriate action as the Contracting Officer directs.

(h) The Government shall, without liability, furnish evidence appropriate to establish exemption from any Federal, State, or local tax when the Contractor requests such evidence and a reasonable basis exists to sustain the exemption.

(End of clause)

52.229-5 TAXES--CONTRACTS PERFORMED IN U.S. POSSESSIONS OR PUERTO RICO (APR 1984)

The term "local taxes," as used in the Federal, State, and local taxes clause of this contract, includes taxes imposed by a possession of the United States or by Puerto Rico.

(End of clause)

52.232-5 PAYMENTS UNDER FIXED-PRICE CONSTRUCTION CONTRACTS (MAY 1997)

(a) Payment of price. The Government shall pay the Contractor the contract price as provided in this contract.

(b) Progress payments. The Government shall make progress payments monthly as the work proceeds, or at more frequent intervals as determined by the Contracting Officer, on estimates of work accomplished which meets the standards of quality established under the contract, as approved by the Contracting Officer.

(1) The Contractor's request for progress payments shall include the following substantiation:

(i) An itemization of the amounts requested, related to the various elements of work required by the contract covered by the payment requested.

(ii) A listing of the amount included for work performed by each subcontractor under the contract.

(iii) A listing of the total amount of each subcontract under the contract.

(iv) A listing of the amounts previously paid to each such subcontractor under the contract.

(v) Additional supporting data in a form and detail required by the Contracting Officer.

(2) In the preparation of estimates, the Contracting Officer may authorize material delivered on the site and preparatory work done to be taken into consideration. Material delivered to the Contractor at locations other than the site also may be taken into consideration if--

(i) Consideration is specifically authorized by this contract; and

(ii) The Contractor furnishes satisfactory evidence that it has acquired title to such material and that the material will be used to perform this contract.

(c) Contractor certification. Along with each request for progress payments, the Contractor shall furnish the following certification, or payment shall not be made: (However, if the Contractor elects to delete paragraph (c)(4) from the certification, the certification is still acceptable.)

I hereby certify, to the best of my knowledge and belief, that--

(1) The amounts requested are only for performance in accordance with the specifications, terms, and conditions of the contract;

(2) Payments to subcontractors and suppliers have been made from previous payments received under the contract, and timely payments will be made from the proceeds of the payment covered by this certification, in accordance with subcontract agreements and the requirements of chapter 39 of Title 31, United States Code;

(3) This request for progress payments does not include any amounts which the prime contractor intends to withhold or retain from a subcontractor or supplier in accordance with the terms and conditions of the subcontract; and

(4) This certification is not to be construed as final acceptance of a subcontractor's performance.

_____

(Name)

_____

(Title)

_____

(Date)

(d) Refund of unearned amounts. If the Contractor, after making a certified request for progress payments, discovers that a portion or all of such request constitutes a payment for performance by the Contractor that fails to conform to the specifications, terms, and conditions of this contract (hereinafter referred to as the "unearned amount"), the Contractor shall--

(1) Notify the Contracting Officer of such performance deficiency; and

(2) Be obligated to pay the Government an amount (computed by the Contracting Officer in the manner provided in paragraph (j) of this clause) equal to interest on the unearned amount from the 8th day after the date of receipt of the unearned amount until--

(i) The date the Contractor notifies the Contracting Officer that the performance deficiency has been corrected; or

(ii) The date the Contractor reduces the amount of any subsequent certified request for progress payments by an amount equal to the unearned amount.

(e) Retainage. If the Contracting Officer finds that satisfactory progress was achieved during any period for which a progress payment is to be made, the Contracting Officer shall authorize payment to be made in full. However, if satisfactory progress has not been

made, the Contracting Officer may retain a maximum of 10 percent of the amount of the payment until satisfactory progress is achieved. When the work is substantially complete, the Contracting Officer may retain from previously withheld funds and future progress payments that amount the Contracting Officer considers adequate for protection of the Government and shall release to the Contractor all the remaining withheld funds. Also, on completion and acceptance of each separate building, public work, or other division of the contract, for which the price is stated separately in the contract, payment shall be made for the completed work without retention of a percentage.

(f) Title, liability, and reservation of rights. All material and work covered by progress payments made shall, at the time of payment, become the sole property of the Government, but this shall not be construed as--

(1) Relieving the Contractor from the sole responsibility for all material and work upon which payments have been made or the restoration of any damaged work; or

(2) Waiving the right of the Government to require the fulfillment of all of the terms of the contract.

(g) Reimbursement for bond premiums. In making these progress payments, the Government shall, upon request, reimburse the Contractor for the amount of premiums paid for performance and payment bonds (including coinsurance and reinsurance agreements, when applicable) after the Contractor has furnished evidence of full payment to the surety. The retainage provisions in paragraph (e) of this clause shall not apply to that portion of progress payments attributable to bond premiums.

(h) Final payment. The Government shall pay the amount due the Contractor under this contract after--

(1) Completion and acceptance of all work;

(2) Presentation of a properly executed voucher; and

(3) Presentation of release of all claims against
the Government arising by virtue of this contract, other than claims, in stated amounts, that the Contractor has specifically excepted from the operation of the release. A release may also be required of the assignee if the Contractor's claim to amounts payable under this contract has been assigned under the Assignment of Claims Act of 1940 (31 U.S.C. 3727 and 41 U.S.C. 15).

(i) Limitation because of undefinitized work. Notwithstanding any provision of this contract, progress payments shall not exceed 80 percent on work accomplished on undefinitized contract actions. A "contract action" is any action resulting in a contract, as defined in FAR Subpart 2.1, including contract modifications for additional supplies or services, but not including contract modifications that are within the scope and under the terms of the contract, such as contract modifications issued pursuant to the Changes

clause, or funding and other administrative changes.

(j) Interest computation on unearned amounts. In accordance with 31 U.S.C. 3903(c)(1), the amount payable under subparagraph (d)(2) of this clause shall be--

(1) Computed at the rate of average bond equivalent rates of 91-day Treasury bills auctioned at the most recent auction of such bills prior to the date the Contractor receives the unearned amount; and

(2) Deducted from the next available payment to the Contractor.

52.232-17 INTEREST (JUNE 1996)

(a) Except as otherwise provided in this contract under a Price Reduction for Defective Cost or Pricing Data clause or a Cost Accounting Standards clause, all amounts that become payable by the Contractor to the Government under this contract (net of any applicable tax credit under the Internal Revenue Code (26 U.S.C. 1481)) shall bear simple interest from the date due until paid unless paid within 30 days of becoming due. The interest rate shall be the interest rate established by the Secretary of the Treasury as provided in Section 12 of the Contract Disputes Act of 1978 (Public Law 95-563), which is applicable to the period in which the amount becomes due, as provided in paragraph (b) of this clause, and then at the rate applicable for each six-month period as fixed by the Secretary until the amount is paid. reproduce, prepare derivative works, distribute copies to the public, and (b) Amounts shall be due at the earliest of the following dates:

(1) The date fixed under this contract.

(2) The date of the first written demand for payment consistent with this contract, including any demand resulting from a default termination.

(3) The date the Government transmits to the Contractor a proposed supplemental agreement to confirm completed negotiations establishing the amount of debt.

(4) If this contract provides for revision of prices, the date of written notice to the Contractor stating the amount of refund payable in connection with a pricing proposal or a negotiated pricing agreement not confirmed by contract modification.

(c) The interest charge made under this clause may be reduced under the procedures prescribed in 32.614-2 of the Federal Acquisition Regulation in effect on the date of this contract.

52.232-23 ASSIGNMENT OF CLAIMS (JAN 1986)

(a) The Contractor, under the Assignment of Claims Act, as amended, 31 U.S.C. 3727, 41

U.S.C. 15 (hereafter referred to as "the Act"), may assign its rights to be paid amounts due or to become due as a result of the performance of this contract to a bank, trust company, or other financing institution, including any Federal lending agency. The assignee under such an assignment may thereafter further assign or reassign its right under the original assignment to any type of financing institution described in the preceding sentence.

(b) Any assignment or reassignment authorized under the Act and this clause shall cover all unpaid amounts payable under this contract, and shall not be made to more than one party, except that an assignment or reassignment may be made to one party as agent or trustee for two or more parties participating in the financing of this contract.

(c) The Contractor shall not furnish or disclose to any assignee under this contract any classified document (including this contract) or information related to work under this contract until the Contracting Officer authorizes such action in writing.

52.232-27 PROMPT PAYMENT FOR CONSTRUCTION CONTRACTS (MAR 2001)

Notwithstanding any other payment terms in this contract, the Government will make invoice payments and contract financing payments under the terms and conditions specified in this clause. Payment shall be considered as being made on the day a check is dated or the date of an electronic funds transfer. Definitions of pertinent terms are set forth in sections 2.101 and 32.902 of the Federal Acquisition Regulation. All days referred to in this clause are calendar days, unless otherwise specified. (However, see subparagraph (a)(3) concerning payments due on Saturdays, Sundays, and legal holidays.)

(a) Invoice payments. (1) Types of invoice payments. For purposes of this clause, there are several types of invoice payments that may occur under this contract, as follows:

(i) Progress payments, if provided for elsewhere in this contract, based on Contracting Officer approval of the estimated amount and value of work or services performed, including payments for reaching milestones in any project:

(A) The due date for making such payments shall be 14 days after receipt of the payment request by the designated billing office. If the designated billing office fails to annotate the payment request with the actual date of receipt at the time of receipt, the payment due date shall be the 14th day after the date of the Contractor's payment request, provided a proper payment request is received and there is no disagreement over quantity, quality, or Contractor compliance with contract requirements.

(B) The due date for payment of any amounts retained by the Contracting Officer in accordance with the clause at 52.232-5, Payments Under Fixed-Price Construction Contracts, shall be as specified in the contract or, if not specified, 30 days after approval

for release to the Contractor by the Contracting Officer.

(ii) Final payments based on completion and acceptance of all work and presentation of release of all claims against the Government arising by virtue of the contract, and payments for partial deliveries that have been accepted by the Government (e.g., each separate building, public work, or other division of the contract for which the price is stated separately in the contract):

(A) The due date for making such payments shall be either the 30th day after receipt by the designated billing office of a proper invoice from the Contractor, or the 30th day after Government acceptance of the work or services completed by the Contractor, whichever is later. If the designated billing office fails to annotate the invoice with the date of actual receipt at the time of receipt, the invoice payment due date shall be the 30th day after the date of the Contractor's invoice, provided a proper invoice is received and there is no disagreement over quantity, quality, or Contractor compliance with contract requirements.

(B) On a final invoice where the payment amount is subject to contract settlement actions (e.g., release of claims), acceptance shall be deemed to have occurred on the effective date of the contract settlement.

(2) Contractor's invoice. The Contractor shall prepare and submit invoices to the designated billing office specified in the contract. A proper invoice must include the items listed in subdivisions (a)(2)(i) through (a)(2)(ix) of this clause. If the invoice does not comply with these requirements, it shall be returned within 7 days after the date the designated billing office received the invoice, with a statement of the reasons why it is not a proper invoice. Untimely notification will be taken into account in computing any interest penalty owed the Contractor in the manner described in subparagraph (a)(4) of this clause.

(i) Name and address of the Contractor.

(ii) Invoice date. (The Contractor is encouraged to date invoices as close as possible to the date of mailing or transmission.)

(iii) Contract number or other authorization for work or services performed (including order number and contract line item number).

(iv) Description of work or services performed.

(v) Delivery and payment terms (e.g., prompt payment discount terms).

(vi) Name and address of Contractor official to whom payment is to be sent (must be the same as that in the contract or in a proper notice of assignment).

(vii) Name (where practicable), title, phone number, and mailing address of person to be

notified in the event of a defective invoice.

(viii) For payments described in subdivision (a)(1)(i) of this clause, substantiation of the amounts requested and certification in accordance with the requirements of the clause at 52.232-5, Payments Under Fixed-Price Construction Contracts.

(ix) Any other information or documentation required by the contract.

(x) While not required, the Contractor is strongly encouraged to assign an identification number to each invoice.

(3) Interest penalty. An interest penalty shall be paid automatically by the designated payment office, without request from the Contractor, if payment is not made by the due date and the conditions listed in subdivisions (a)(3)(i) through (a)(3)(iii) of this clause are met, if applicable. However, when the due date falls on a Saturday, Sunday, or legal holiday when Federal Government offices are closed and Government business is not expected to be conducted, payment may be made on the following business day without incurring a late payment interest penalty.

(i) A proper invoice was received by the designated billing office.

(ii) A receiving report or other Government documentation authorizing payment was processed and there was no disagreement over quantity, quality, Contractor compliance with any contract term or condition, or requested progress payment amount.

(iii) In the case of a final invoice for any balance of funds due the Contractor for work or services performed, the amount was not subject to further contract settlement actions between the Government and the Contractor.

(4) Computing penalty amount. The interest penalty shall be at the rate established by the Secretary of the Treasury under section 12 of the Contract Disputes Act of 1978 (41 U.S.C. 611) that is in effect on the day after the due date, except where the interest penalty is prescribed by other governmental authority (e.g., tariffs). This rate is referred to as the "Renegotiation Board Interest Rate," and it is published in the Federal Register semiannually on or about January 1 and July 1. The interest penalty shall accrue daily on the invoice principal payment amount approved by the Government until the payment date of such approved principal amount; and will be compounded in 30-day increments inclusive from the first day after the due date through the payment date. That is, interest accrued at the end of any 30-day period will be added to the approved invoice principal payment amount and will be subject to interest penalties if not paid in the succeeding 30-day period. If the designated billing office failed to notify the Contractor of a defective invoice within the periods prescribed in subparagraph (a)(2) of this clause, the due date on the corrected invoice will be adjusted by subtracting from such date the number of days taken beyond the prescribed notification of defects period. Any interest penalty owed the Contractor will be based on this adjusted due date. Adjustments will be made by the designated payment office for errors in calculating interest penalties.

(i) For the sole purpose of computing an interest penalty that might be due the Contractor for payments described in subdivision (a)(1)(ii) of this clause, Government acceptance or approval shall be deemed to have occurred constructively on the 7th day after the Contractor has completed the work or services in accordance with the terms and conditions of the contract. In the event that actual acceptance or approval occurs within the constructive acceptance or approval period, the determination of an interest penalty shall be based on the actual date of acceptance or approval. Constructive acceptance or constructive approval requirements do not apply if there is a disagreement over quantity, quality, or Contractor compliance with a contract provision. These requirements also do not compel Government officials to accept work or services, approve Contractor estimates, perform contract administration functions, or make payment prior to fulfilling their responsibilities.

(ii) The following periods of time will not be included in the determination of an interest penalty:

(A) The period taken to notify the Contractor of defects in invoices submitted to the Government, but this may not exceed 7 days.

(B) The period between the defects notice and resubmission of the corrected invoice by the Contractor.

(C) For incorrect electronic funds transfer (EFT) information, in accordance with the EFT clause of this contract.

(iii) Interest penalties will not continue to accrue after the filing of a claim for such penalties under the clause at 52.233-1, Disputes, or for more than 1 year. Interest penalties of less than $1 need not be paid.

(iv) Interest penalties are not required on payment delays due to disagreement between the Government and the Contractor over the payment amount or other issues involving contract compliance, or on amounts temporarily withheld or retained in accordance with the terms of the contract. Claims involving disputes, and any interest that may be payable, will be resolved in accordance with the clause at 52.233-1, Disputes.

(5) Prompt payment discounts. An interest penalty also shall be paid automatically by the designated payment office, without request from the Contractor, if a discount for prompt payment is taken improperly. The interest penalty will be calculated on the amount of discount taken for the period beginning with the first day after the end of the discount period through the date when the Contractor is paid.

(6) Additional interest penalty. (i) If this contract was awarded on or after October 1, 1989, a penalty amount, calculated in accordance with subdivision (a)(6)(iii) of this clause, shall be paid in addition to the interest penalty amount if the Contractor--

(A) Is owed an interest penalty of $1 or more;

(B) Is not paid the interest penalty within 10 days after the date the invoice amount is paid; and

(C) Makes a written demand to the designated payment office for additional penalty payment, in accordance with subdivision (a)(6)(ii) of this clause, postmarked not later than 40 days after the date the invoice amount is paid.

(ii)(A) Contractors shall support written demands for additional penalty payments with the following data. No additional data shall be required. Contractors shall--

(1) Specifically assert that late payment interest is due under a specific invoice, and request payment of all overdue late payment interest penalty and such additional penalty as may be required;

(2) Attach a copy of the invoice on which the unpaid late payment interest was due; and

(3) State that payment of the principal has been received, including the date of receipt.

(B) Demands must be postmarked on or before the 40th day after payment was made, except that--

(1) If the postmark is illegible or nonexistent, the demand must have been received and annotated with the date of receipt by the designated payment office on or before the 40th day after payment was made; or

(2) If the postmark is illegible or nonexistent and the designated payment office fails to make the required annotation, the demand's validity will be determined by the date the Contractor has placed on the demand; provided such date is no later than the 40th day after payment was made.

(iii)(A) The additional penalty shall be equal to 100 percent of any original late payment interest penalty, except--

(1) The additional penalty shall not exceed $5,000;

(2) The additional penalty shall never be less than $25; and

(3) No additional penalty is owed if the amount of the underlying interest penalty is less than $1.

(B) If the interest penalty ceases to accrue in accordance with the limits stated in subdivision (a)(4)(iii) of this clause, the amount of the additional penalty shall be calculated on the amount of interest penalty that would have accrued in the absence of these limits, subject to the overall limits on the additional penalty specified in subdivision

(a)(6)(iii)(A) of this clause.

(C) For determining the maximum and minimum additional penalties, the test shall be the interest penalty due on each separate payment made for each separate contract. The maximum and minimum additional penalty shall not be based upon individual invoices unless the invoices are paid separately. Where payments are consolidated for disbursing purposes, the maximum and minimum additional penalty determination shall be made separately for each contract therein.

(D) The additional penalty does not apply to payments regulated by other Government regulations (e.g., payments under utility contracts subject to tariffs and regulation).

(b) Contract financing payments. (1) Due dates for recurring financing payments. If this contract provides for contract financing, requests for payment shall be submitted to the designated billing office as specified in this contract or as directed by the Contracting Officer. Contract financing payments shall be made on the [insert day as prescribed by Agency head; if not prescribed, insert 30th day] day after receipt of a proper contract financing request by the designated billing office. In the event that an audit or other review of a specific financing request is required to ensure compliance with the terms and conditions of the contract, the designated payment office is not compelled to make payment by the due date specified.

(2) Due dates for other contract financing. For advance payments, loans, or other arrangements that do not involve recurring submissions of contract financing requests, payment shall be made in accordance with the corresponding contract terms or as directed by the Contracting Officer.

(3) Interest penalty not applicable. Contract financing payments shall not be assessed an interest penalty for payment delays.

(c) Subcontract clause requirements. The Contractor shall include in each subcontract for property or services (including a material supplier) for the purpose of performing this contract the following:

(1) Prompt payment for subcontractors. A payment clause that obligates the Contractor to pay the subcontractor for satisfactory performance under its subcontract not later than 7 days from receipt of payment out of such amounts as are paid to the Contractor under this contract.

(2) Interest for subcontractors. An interest penalty clause that obligates the Contractor to pay to the subcontractor an interest penalty for each payment not made in accordance with the payment clause--

(i) For the period beginning on the day after the required payment date and ending on the date on which payment of the amount due is made; and

(ii) Computed at the rate of interest established by the Secretary of the Treasury, and published in the Federal Register, for interest payments under section 12 of the Contract Disputes Act of 1978 (41 U.S.C. 611) in effect at the time the Contractor accrues the obligation to pay an interest penalty.

(3) Subcontractor clause flowdown. A clause requiring each subcontractor to include a payment clause and an interest penalty clause conforming to the standards set forth in subparagraphs (c)(1) and (c)(2) of this clause in each of its subcontracts, and to require each of its subcontractors to include such clauses in their subcontracts with each lower-tier subcontractor or supplier.

(d) Subcontract clause interpretation. The clauses required by paragraph (c) of this clause shall not be construed to impair the right of the Contractor or a subcontractor at any tier to negotiate, and to include in their subcontract, provisions that--

(1) Retainage permitted. Permit the Contractor or a subcontractor to retain (without cause) a specified percentage of each progress payment otherwise due to a subcontractor for satisfactory performance under the subcontract without incurring any obligation to pay a late payment interest penalty, in accordance with terms and conditions agreed to by the parties to the subcontract, giving such recognition as the parties deem appropriate to the ability of a subcontractor to furnish a performance bond and a payment bond;

(2) Withholding permitted. Permit the Contractor or subcontractor to make a determination that part or all of the subcontractor's request for payment may be withheld in accordance with the subcontract agreement; and

(3) Withholding requirements. Permit such withholding without incurring any obligation to pay a late payment penalty if--

(i) A notice conforming to the standards of paragraph (g) of this clause previously has been furnished to the subcontractor; and

(ii) A copy of any notice issued by a Contractor pursuant to subdivision (d)(3)(i) of this clause has been furnished to the Contracting Officer.

(e) Subcontractor withholding procedures. If a Contractor, after making a request for payment to the Government but before making a payment to a subcontractor for the subcontractor's performance covered by the payment request, discovers that all or a portion of the payment otherwise due such subcontractor is subject to withholding from the subcontractor in accordance with the subcontract agreement, then the Contractor shall--

(1) Subcontractor notice. Furnish to the subcontractor a notice conforming to the standards of paragraph (g) of this clause as soon as practicable upon ascertaining the cause giving rise to a withholding, but prior to the due date for subcontractor payment;

(2) Contracting Officer notice. Furnish to the Contracting Officer, as soon as practicable, a copy of the notice furnished to the subcontractor pursuant to subparagraph (e)(1) of this clause;

(3) Subcontractor progress payment reduction. Reduce the subcontractor's progress payment by an amount not to exceed the amount specified in the notice of withholding furnished under subparagraph (e)(1) of this clause;

(4) Subsequent subcontractor payment. Pay the subcontractor as soon as practicable after the correction of the identified subcontract performance deficiency, and--

(i) Make such payment within--

(A) Seven days after correction of the identified subcontract performance deficiency (unless the funds therefor must be recovered from the Government because of a reduction under subdivision (e)(5)(i)) of this clause; or

(B) Seven days after the Contractor recovers such funds from the Government; or

(ii) Incur an obligation to pay a late payment interest penalty computed at the rate of interest established by the Secretary of the Treasury, and published in the Federal Register, for interest payments under section 12 of the Contracts Disputes Act of 1978 (41 U.S.C. 611) in effect at the time the Contractor accrues the obligation to pay an interest penalty;

(5) Notice to Contracting Officer. Notify the Contracting Officer upon--

(i) Reduction of the amount of any subsequent certified application for payment; or

(ii) Payment to the subcontractor of any withheld amounts of a progress payment, specifying--

(A) The amounts withheld under subparagraph (e)(1) of this clause; and

(B) The dates that such withholding began and ended; and

(6) Interest to Government. Be obligated to pay to the Government an amount equal to interest on the withheld payments (computed in the manner provided in 31 U.S.C. 3903(c)(1)), from the 8th day after receipt of the withheld amounts from the Government until--

(i) The day the identified subcontractor performance deficiency is corrected; or

(ii) The date that any subsequent payment is reduced under subdivision (e)(5)(i) of this clause.

(f) Third-party deficiency reports. (1) Withholding from subcontractor. If a Contractor, after making payment to a first-tier subcontractor, receives from a supplier or subcontractor of the first-tier subcontractor (hereafter referred to as a "second-tier subcontractor") a written notice in accordance with section 2 of the Act of August 24, 1935 (40 U.S.C. 270b, Miller Act), asserting a deficiency in such first-tier subcontractor's performance under the contract for which the Contractor may be ultimately liable, and the Contractor determines that all or a portion of future payments otherwise due such first-tier subcontractor is subject to withholding in accordance with the subcontract agreement, the Contractor may, without incurring an obligation to pay an interest penalty under subparagraph (e)(6) of this clause--

(i) Furnish to the first-tier subcontractor a notice conforming to the standards of paragraph (g) of this clause as soon as practicable upon making such determination; and

(ii) Withhold from the first-tier subcontractor's next available progress payment or payments an amount not to exceed the amount specified in the notice of withholding furnished under subdivision (f)(1)(i) of this clause.

(2) Subsequent payment or interest charge. As soon as practicable, but not later than 7 days after receipt of satisfactory written notification that the identified subcontract performance deficiency has been corrected, the Contractor shall--

(i) Pay the amount withheld under subdivision (f)(1)(ii) of this clause to such first-tier subcontractor; or

(ii) Incur an obligation to pay a late payment interest penalty to such first-tier subcontractor computed at the rate of interest established by the Secretary of the Treasury, and published in the Federal Register, for interest payments under section 12 of the Contracts Disputes Act of 1978 (41 U.S.C. 611) in effect at the time the Contractor accrues the obligation to pay an interest penalty.

(g) Written notice of subcontractor withholding. A written notice of any withholding shall be issued to a subcontractor (with a copy to the Contracting Officer of any such notice issued by the Contractor), specifying--

(1) The amount to be withheld;

(2) The specific causes for the withholding under the terms of the subcontract; and

(3) The remedial actions to be taken by the subcontractor in order to receive payment of the amounts withheld.

(h) Subcontractor payment entitlement. The Contractor may not request payment from the Government of any amount withheld or retained in accordance with paragraph (d) of this clause until such time as the Contractor has determined and certified to the Contracting Officer that the subcontractor is entitled to the payment of such amount.

(i) Prime-subcontractor disputes. A dispute between the Contractor and subcontractor relating to the amount or entitlement of a subcontractor to a payment or a late payment interest penalty under a clause included in the subcontract pursuant to paragraph (c) of this clause does not constitute a dispute to which the United States is a party. The United States may not be interpleaded in any judicial or administrative proceeding involving such a dispute.

(j) Preservation of prime-subcontractor rights. Except as provided in paragraph (i) of this clause, this clause shall not limit or impair any contractual, administrative, or judicial remedies otherwise available to the Contractor or a subcontractor in the event of a dispute involving late payment or nonpayment by the Contractor or deficient subcontract performance or nonperformance by a subcontractor.

(k) Non-recourse for prime contractor interest penalty. The Contractor's obligation to pay an interest penalty to a subcontractor pursuant to the clauses included in a subcontract under paragraph (c) of this clause shall not be construed to be an obligation of the United States for such interest penalty. A cost-reimbursement claim may not include any amount for reimbursement of such interest penalty.

52.232-33 PAYMENT BY ELECTRONIC FUNDS TRANSFER—CENTRAL CONTRACTOR REGISTRATION (MAY 1999)

(a) Method of payment. (1) All payments by the Government under this contract shall be made by electronic funds transfer (EFT), except as provided in paragraph (a)(2) of this clause. As used in this clause, the term “EFT” refers to the funds transfer and may also include the payment information transfer.

(2) In the event the Government is unable to release one or more payments by EFT, the Contractor agrees to either--

(i) Accept payment by check or some other mutually agreeable method of payment; or

(ii) Request the Government to extend the payment due date until such time as the Government can make payment by EFT (but see paragraph (d) of this clause).

(b) Contractor's EFT information. The Government shall make payment to the Contractor using the EFT information contained in the Central Contractor Registration (CCR) database. In the event that the EFT information changes, the Contractor shall be responsible for providing the updated information to the CCR database.

(c) Mechanisms for EFT payment. The Government may make payment by EFT through either the Automated Clearing House (ACH) network, subject to the rules of the National Automated Clearing House Association, or the Fedwire Transfer System. The rules governing Federal payments through the ACH are contained in 31 CFR part 210.

(d) Suspension of payment. If the Contractor's EFT information in the CCR database is incorrect, then the Government need not make payment to the Contractor under this contract until correct EFT information is entered into the CCR database; and any invoice or contract financing request shall be deemed not to be a proper invoice for the purpose of prompt payment under this contract. The prompt payment terms of the contract regarding notice of an improper invoice and delays in accrual of interest penalties apply.

(e) Contractor EFT arrangements. If the Contractor has identified multiple payment receiving points (i.e., more than one remittance address and/or EFT information set) in the CCR database, and the Contractor has not notified the Government of the payment receiving point applicable to this contract, the Government shall make payment to the first payment receiving point (EFT information set or remittance address as applicable) listed in the CCR database.

(f) Liability for uncompleted or erroneous transfers. (1) If an uncompleted or erroneous transfer occurs because the Government used the Contractor's EFT information incorrectly, the Government remains responsible for--

(i) Making a correct payment;

(ii) Paying any prompt payment penalty due; and

(iii) Recovering any erroneously directed funds.

(2) If an uncompleted or erroneous transfer occurs because the Contractor's EFT information was incorrect, or was revised within 30 days of Government release of the EFT payment transaction instruction to the Federal Reserve System, and--

(i) If the funds are no longer under the control of the payment office, the Government is deemed to have made payment and the Contractor is responsible for recovery of any erroneously directed funds; or

(ii) If the funds remain under the control of the payment office, the Government shall not make payment, and the provisions of paragraph (d) of this clause shall apply.

(g) EFT and prompt payment. A payment shall be deemed to have been made in a timely manner in accordance with the prompt payment terms of this contract if, in the EFT payment transaction instruction released to the Federal Reserve System, the date specified for settlement of the payment is on or before the prompt payment due date, provided the specified payment date is a valid date under the rules of the Federal Reserve System.

(h) EFT and assignment of claims. If the Contractor assigns the proceeds of this contract as provided for in the assignment of claims terms of this contract, the Contractor shall require as a condition of any such assignment, that the assignee shall register in the CCR

database and shall be paid by EFT in accordance with the terms of this clause. In all respects, the requirements of this clause shall apply to the assignee as if it were the Contractor. EFT information that shows the ultimate recipient of the transfer to be other than the Contractor, in the absence of a proper assignment of claims acceptable to the Government, is incorrect EFT information within the meaning of paragraph (d) of this clause.

(i) Liability for change of EFT information by financial agent. The Government is not liable for errors resulting from changes to EFT information made by the Contractor's financial agent.

(j) Payment information. The payment or disbursing office shall forward to the Contractor available payment information that is suitable for transmission as of the date of release of the EFT instruction to the Federal Reserve System. The Government may request the Contractor to designate a desired format and method(s) for delivery of payment information from a list of formats and methods the payment office is capable of executing. However, the Government does not guarantee that any particular format or method of delivery is available at any particular payment office and retains the latitude to use the format and delivery method most convenient to the Government. If the Government makes payment by check in accordance with paragraph (a) of this clause, the Government shall mail the payment information to the remittance address contained in the CCR database.

(End of Clause)

52.233-1 DISPUTES. (DEC 1998)

(a) This contract is subject to the Contract Disputes Act of 1978, as amended (41 U.S.C. 601-613).

(b) Except as provided in the Act, all disputes arising under or relating to this contract shall be resolved under this clause.

(c) "Claim," as used in this clause, means a written demand or written assertion by one of the contracting parties seeking, as a matter of right, the payment of money in a sum certain, the adjustment or interpretation of contract terms, or other relief arising under or relating to this contract. A claim arising under a contract, unlike a claim relating to that contract, is a claim that can be resolved under a contract clause that provides for the relief sought by the claimant. However, a written demand or written assertion by the Contractor seeking the payment of money exceeding $100,000 is not a claim under the Act until certified as required by subparagraph (d)(2) of this clause. A voucher, invoice, or other routine request for payment that is not in dispute when submitted is not a claim under the Act. The submission may be converted to a claim under the Act, by complying with the submission and certification requirements of this clause, if it is disputed either as to liability or amount or is not acted upon in a reasonable time.

(d)(1) A claim by the Contractor shall be made in writing and, unless otherwise stated in this contract, submitted within 6 years after accrual of the claim to the Contracting Officer for a written decision. A claim by the Government against the Contractor shall be subject to a written decision by the Contracting Officer.

(2)(i) The contractors shall provide the certification specified in subparagraph (d)(2)(iii) of this clause when submitting any claim -

(A) Exceeding $100,000; or

(B) Regardless of the amount claimed, when using -

(1) Arbitration conducted pursuant to 5 U.S.C. 575-580; or

(2) Any other alternative means of dispute resolution (ADR) technique that the agency elects to handle in accordance with the Administrative Dispute Resolution Act (ADRA).

(ii) The certification requirement does not apply to issues in controversy that have not been submitted as all or part of a claim.

(iii) The certification shall state as follows: "I certify that the claim is made in good faith; that the supporting data are accurate and complete to the best of my knowledge and belief; that the amount requested accurately reflects the contract adjustment for which the Contractor believes the Government is liable; and that I am duly authorized to certify the claim on behalf of the Contractor.

(3) The certification may be executed by any person duly authorized to bind the Contractor with respect to the claim.

(e) For Contractor claims of $100,000 or less, the Contracting Officer must, if requested in writing by the Contractor, render a decision within 60 days of the request. For Contractor-certified claims over $100,000, the Contracting Officer must, within 60 days, decide the claim or notify the Contractor of the date by which the decision will be made.

(f) The Contracting Officer's decision shall be final unless the Contractor appeals or files a suit as provided in the Act.

(g) If the claim by the Contractor is submitted to the Contracting Officer or a claim by the Government is presented to the Contractor, the parties, by mutual consent, may agree to use alternative disput resolution (ADR). If the Contractor refuses an offer for ADR, the Contractor shall inform the Contracting Officer, in writing, of the Contractor's specific reasons for rejecting the request.

(h) The Government shall pay interest on the amount found due and unpaid from (1) the date the Contracting Officer receives the claim (certified, if required); or (2) the date that

payment otherwise would be due, if that date is later, until the date of payment. With regard to claims having defective certifications, as defined in (FAR) 48 CFR 33.201, interest shall be paid from the date that the Contracting Officer initially receives the claim. Simple interest on claims shall be paid at the rate, fixed by the Secretary of the Treasury as provided in the Act, which is applicable to the period during which the Contracting Officer receives the claim and then at the rate applicable for each 6-month period as fixed by the Treasury Secretary during the pendency of the claim.

(i) The Contractor shall proceed diligently with performance of this contract, pending final resolution of any request for relief, claim, appeal, or action arising under the contract, and comply with any decision of the Contracting Officer.

(End of clause)

52.233-3 PROTEST AFTER AWARD (AUG. 1996)

(a) Upon receipt of a notice of protest (as defined in FAR 33.101) or a determination that a protest is likely (see FAR 33.102(d)), the Contracting Officer may, by written order to the Contractor, direct the Contractor to stop performance of the work called for by this contract. The order shall be specifically identified as a stop-work order issued under this clause. Upon receipt of the order, the Contractor shall immediately comply with its terms and take all reasonable steps to minimize the incurrence of costs allocable to the work covered by the order during the period of work stoppage. Upon receipt of the final decision in the protest, the Contracting Officer shall either--

(1) Cancel the stop-work order; or

(2) Terminate the work covered by the order as provided in the Default, or the Termination for Convenience of the Government, clause of this contract.

(b) If a stop-work order issued under this clause is canceled either before or after a final decision in the protest, the Contractor shall resume work. The Contracting Officer shall make an equitable adjustment in the delivery schedule or contract price, or both, and the contract shall be modified, in writing, accordingly, if--

(1) The stop-work order results in an increase in the time required for, or in the Contractor's cost properly allocable to, the performance of any part of this contract; and

(2) The Contractor asserts its right to an adjustment within 30 days after the end of the period of work stoppage; provided, that if the Contracting Officer decides the facts justify the action, the Contracting Officer may receive and act upon a proposal at any time before final payment under this contract.

(c) If a stop-work order is not canceled and the work covered by the order is terminated for the convenience of the Government, the Contracting Officer shall allow reasonable

costs resulting from the stop-work order in arriving at the termination settlement.

(d) If a stop-work order is not canceled and the work covered by the order is terminated for default, the Contracting Officer shall allow, by equitable adjustment or otherwise, reasonable costs resulting from the stop-work order.

(e) The Government's rights to terminate this contract at any time are not affected by action taken under this clause.

(f) If, as the result of the Contractor's intentional or negligent misstatement, misrepresentation, or miscertification, a protest related to this contract is sustained, and the Government pays costs, as provided in FAR 33.102(b)(2) or 33.104(h)(1), the Government may require the Contractor to reimburse the Government the amount of such costs. In addition to any other remedy available, and pursuant to the requirements of Subpart 32.6, the Government may collect this debt by offsetting the amount against any payment due the Contractor under any contract between the Contractor and the Government.

52.236-2 DIFFERING SITE CONDITIONS (APR 1984)

As prescribed in 36.502, insert the following clause in solicitations and contracts when a fixed-price construction contract or a fixed-price dismantling, demolition, or removal of improvements contract is contemplated and the contract amount is expected to exceed the small purchase limitation. The Contracting Officer may insert the clause in solicitations and contracts when a fixed-price construction or a fixed-price contract for dismantling, demolition, or removal of improvements is contemplated and the contract amount is expected to be within the small purchase limitation.

(a) The Contractor shall promptly, and before the conditions are disturbed, give a written notice to the Contracting Officer of

(1) subsurface or latent physical conditions at the site which differ materially from those indicated in this contract, or

(2) unknown physical conditions at the site, of an unusual nature, which differ materially from those ordinarily encountered and generally recognized as inhering in work of the character provided for in the contract.

(b) The Contracting Officer shall investigate the site conditions promptly after receiving the notice. If the conditions do materially so differ and cause an increase or decrease in the Contractor's cost of, or the time required for, performing any part of the work under this contract, whether or not changed as a result of the conditions, an equitable adjustment shall be made under this clause and the contract modified in writing accordingly.

(c) No request by the Contractor for an equitable adjustment to the contract under this clause shall be allowed, unless the Contractor has given the written notice required; provided, that the time prescribed in (a) above for giving written notice may be extended by the Contracting Officer.

(d) No request by the Contractor for an equitable adjustment to the contract for differing site conditions shall be allowed if made after final payment under this contract.

52.236-3 SITE INVESTIGATION AND CONDITIONS AFFECTING THE WORK (APR 1984)

(a) The Contractor acknowledges that it has taken steps reasonably necessary to ascertain the nature and location of the work, and that it has investigated and satisfied itself as to the general and local conditions which can affect the work or its cost, including but not limited to

(1) conditions bearing upon transportation, disposal, handling, and storage of materials;

(2) the availability of labor, water, electric power, and roads;

(3) uncertainties of weather, river stages, tides, or similar physical conditions at the site;

(4) the conformation and conditions of the ground; and (5) the character of equipment and facilities needed preliminary to and during work performance. The Contractor also acknowledges that it has satisfied itself as to the character, quality, and quantity of surface and subsurface materials or obstacles to be encountered insofar as this information is reasonably ascertainable from an inspection of the site, including all exploratory work done by the Government, as well as from the drawings and specifications made a part of this contract. Any failure of the Contractor to take the actions described and acknowledged in this paragraph will not relieve the Contractor from responsibility for estimating properly the difficulty and cost of successfully performing the work, or for proceeding to successfully perform the work without additional expense to the Government.

(b) The Government assumes no responsibility for any conclusions or interpretations made by the Contractor based on the information made available by the Government. Nor does the Government assume responsibility for any understanding reached or representation made concerning conditions which can affect the work by any of its officers or agents before the execution of this contract, unless that understanding or representation is expressly stated in this contract.

52.236-5 MATERIAL AND WORKMANSHIP (APR 1984)

(a) All equipment, material, and articles incorporated into the work covered by this

contract shall be new and of the most suitable grade for the purpose intended, unless otherwise specifically provided in this contract. References in the specifications to equipment, material, articles, or patented processes by trade name, make, or catalog number, shall be regarded as establishing a standard of quality and shall not be construed as limiting competition. The Contractor may, at its option, use any equipment, material, article, or process that, in the judgment of the Contracting Officer, is equal to that named in the specifications, unless otherwise specifically provided in this contract.

(b) The Contractor shall obtain the Contracting Officer's approval of the machinery and mechanical and other equipment to be incorporated into the work. When requesting approval, the Contractor shall furnish to the Contracting Officer the name of the manufacturer, the model number, and other information concerning the performance, capacity, nature, and rating of the machinery and mechanical and other equipment. When required by this contract or by the Contracting Officer, the Contractor shall also obtain the Contracting Officer's approval of the material or articles which the Contractor contemplates incorporating into the work. When requesting approval, the Contractor shall provide full information concerning the material or articles. When directed to do so, the Contractor shall submit samples for approval at the Contractor's expense, with all shipping charges prepaid. Machinery, equipment, material, and articles that do not have the required approval shall be installed or used at the risk of subsequent rejection.

(c) All work under this contract shall be performed in a skillful and workmanlike manner. The Contracting Officer may require, in writing, that the Contractor remove from the work any employee the Contracting Officer deems incompetent, careless, or otherwise objectionable.

52.236-6 SUPERINTENDENCE BY THE CONTRACTOR (APR 1984)

At all times during performance of this contract and until the work is completed and accepted, the Contractor shall directly superintend the work or assign and have on the worksite a competent superintendent who is satisfactory to the Contracting Officer and has authority to act for the Contractor.

52.236-7 PERMITS AND RESPONSIBILITIES (NOV 1991)

The Contractor shall, without additional expense to the Government, be responsible for obtaining any necessary licenses and permits, and for complying with any Federal, State, and municipal laws, codes, and regulations applicable to the performance of the work. The Contractor shall also be responsible for all damages to persons or property that occur as a result of the Contractor's fault or negligence. The Contractor shall also be responsible for all materials delivered and work performed until completion and acceptance of the entire work, except for any completed unit of work which may have been accepted under the contract.

52.236-8 OTHER CONTRACTS (APR 1984)

The Government may undertake or award other contracts for additional work at or near the site of the work under this contract. The Contractor shall fully cooperate with the other contractors and with Government employees and shall carefully adapt scheduling and performing the work under this contract to accommodate the additional work, heeding any direction that may be provided by the Contracting Officer. The Contractor shall not commit or permit any act that will interfere with the performance of work by any other contractor or by Government employees.

52.236-9 PROTECTION OF EXISTING VEGETATION, STRUCTURES, EQUIPMENT, UTILITIES, AND IMPROVEMENTS (APR 1984)

(a) The Contractor shall preserve and protect all structures, equipment, and vegetation (such as trees, shrubs, and grass) on or adjacent to the work site, which are not to be removed and which do not unreasonably interfere with the work required under this contract. The Contractor shall only remove trees when specifically authorized to do so, and shall avoid damaging vegetation that will remain in place. If any limbs or branches of trees are broken during contract performance, or by the careless operation of equipment, or by workmen, the Contractor shall trim those limbs or branches with a clean cut and paint the cut with a tree-pruning compound as directed by the Contracting Officer.

(b) The Contractor shall protect from damage all existing improvements and utilities

(1) at or near the work site, and

(2) on adjacent property of a third party, the locations of which are made known to or should be known by the Contractor. The Contractor shall repair any damage to those facilities, including those that are the property of a third party, resulting from failure to comply with the requirements of this contract or failure to exercise reasonable care in performing the work. If the Contractor fails or refuses to repair the damage promptly, the Contracting Officer may have the necessary work performed and charge the cost to the Contractor.

52.236-10 OPERATIONS AND STORAGE AREAS (APR 1984)

(a) The Contractor shall confine all operations (including storage of materials) on Government premises to areas authorized or approved by the Contracting Officer. The Contractor shall hold and save the Government, its officers and agents, free and harmless from liability of any nature occasioned by the Contractor's performance.

(b) Temporary buildings (e.g., storage sheds, shops, offices) and utilities may be erected by the Contractor only with the approval of the Contracting Officer and shall be built with labor and materials furnished by the Contractor without expense to the Government.

The temporary buildings and utilities shall remain the property of the Contractor and shall be removed by the Contractor at its expense upon completion of the work. With the written consent of the Contracting Officer, the buildings and utilities may be abandoned and need not be removed.

(c) The Contractor shall, under regulations prescribed by the Contracting Officer, use only established roadways, or use temporary roadways constructed by the Contractor when and as authorized by the Contracting Officer. When materials are transported in prosecuting the work, vehicles shall not be loaded beyond the loading capacity recommended by the manufacturer of the vehicle or prescribed by any Federal, State, or local law or regulation. When it is necessary to cross curbs or sidewalks, the Contractor shall protect them from damage. The Contractor shall repair or pay for the repair of any damaged curbs, sidewalks, or roads.

52.236-11 USE AND POSSESSION PRIOR TO COMPLETION (APR 1984)

(a) The Government shall have the right to take possession of or use any completed or partially completed part of the work. Before taking possession of or using any work, the Contracting Officer shall furnish the Contractor a list of items of work remaining to be performed or corrected on those portions of the work that the Government intends to take possession of or use. However, failure of the Contracting Officer to list any item of work shall not relieve the Contractor of responsibility for complying with the terms of the contract. The Government's possession or use shall not be deemed an acceptance of any work under the contract.

(b) While the Government has such possession or use, the Contractor shall be relieved of the responsibility for the loss of or damage to the work resulting from the Government's possession or use, notwithstanding the terms of the clause in this contract entitled "Permits and Responsibilities." If prior possession or use by the Government delays the progress of the work or causes additional expense to the Contractor, an equitable adjustment shall be made in the contract price or the time of completion, and the contract shall be modified in writing accordingly.

52.236-12 CLEANING UP (APR 1984)

The Contractor shall at all times keep the work area, including storage areas, free from accumulations of waste materials. Before completing the work, the Contractor shall remove from the work and premises any rubbish, tools, scaffolding, equipment, and materials that are not the property of the Government. Upon completing the work, the Contractor shall leave the work area in a clean, neat, and orderly condition satisfactory to the Contracting Officer.

52.236-13 ACCIDENT PREVENTION (NOV 1991) – ALTERNATE I (NOV 1991)

(a) The Contractor shall provide and maintain work environments and procedures which will

(1) safeguard the public and Government personnel, property, materials, supplies, and equipment exposed to Contractor operations and activities;

(2) avoid interruptions of Government operations and delays in project completion dates; and

(3) control costs in the performance of this contract.

(b) For these purposes on contracts for construction or dismantling, demolition, or removal of improvements, the Contractor shall-

(1) Provide appropriate safety barricades, signs, and signal lights;

(2) Comply with the standards issued by the Secretary of Labor at 29 CFR Part 1926 and 29 CFR Part 1910; and

(3) Ensure that any additional measures the Contracting Officer determines to be reasonably necessary for the purposes are taken.

(c) If this contract is for construction or dismantling, demolition or removal of improvements with any Department of Defense agency or component, the Contractor shall comply with all pertinent provisions of the latest version of U.S. Army Corps of Engineers Safety and Health Requirements Manual, EM 385-1-1, in effect on the date of the solicitation.

(d) Whenever the Contracting Officer becomes aware of any noncompliance with these requirements or any condition which poses a serious or imminent danger to the health or safety of the public or Government personnel, the Contracting Officer shall notify the Contractor orally, with written confirmation, and request immediate initiation of corrective action. This notice, when delivered to the Contractor or the Contractor's representative at the work site, shall be deemed sufficient notice of the noncompliance and that corrective action is required. After receiving the notice, the Contractor shall immediately take corrective action. If the Contractor fails or refuses to promptly take corrective action, the Contracting Officer may issue an order stopping all or part of the work until satisfactory corrective action has been taken. The Contractor shall not be entitled to any equitable adjustment of the contract price or extension of the performance schedule on any stop work order issued under this clause.

(e) The Contractor shall insert this clause, including this paragraph (e), with appropriate changes in the designation of the parties, in subcontracts.

(f) Before commencing the work, the Contractor shall-

(1) Submit a written proposed plan for implementing this clause. The plan shall include an analysis of the significant hazards to life, limb, and property inherent in contract work performance and a plan for controlling these hazards; and

(2) Meet with representatives of the Contracting Officer to discuss and develop a mutual understanding relative to administration of the overall safety program.

52.236-15 SCHEDULES FOR CONSTRUCTION CONTRACTS (APR 1984)

(a) The Contractor shall, within five days after the work commences on the contract or another period of time determined by the Contracting Officer, prepare and submit to the Contracting Officer for approval three copies of a practicable schedule showing the order in which the Contractor proposes to perform the work, and the dates on which the Contractor contemplates starting and completing the several salient features of the work (including acquiring materials, plant, and equipment). The schedule shall be in the form of a progress chart of suitable scale to indicate appropriately the percentage of work scheduled for completion by any given date during the period. If the Contractor fails to submit a schedule within the time prescribed, the Contracting Officer may withhold approval of progress payments until the Contractor submits the required schedule.

(b) The Contractor shall enter the actual progress on the chart as directed by the Contracting Officer, and upon doing so shall immediately deliver three copies of the annotated schedule to the Contracting Officer. If, in the opinion of the Contracting Officer, the Contractor falls behind the approved schedule, the Contractor shall take steps necessary to improve its progress, including those that may be required by the Contracting Officer, without additional cost to the Government. In this circumstance, the Contracting Officer may require the Contractor to increase the number of shifts, overtime operations, days of work, and/or the amount of construction plant, and to submit for approval any supplementary schedule or schedules in chart form as the Contracting Officer deems necessary to demonstrate how the approved rate of progress will be regained.

(c) Failure of the Contractor to comply with the requirements of the Contracting Officer under this clause shall be grounds for a determination by the Contracting Officer that the Contractor is not prosecuting the work with sufficient diligence to ensure completion within the time specified in the contract. Upon making this determination, the Contracting Officer may terminate the Contractor's right to proceed with the work, or any separable part of it, in accordance with the default terms of this contract.

52.236-21 SPECIFICATIONS AND DRAWINGS FOR CONSTRUCTION (FEB 1997)

(a) The Contractor shall keep on the work site a copy of the drawings and specifications and shall at all times give the Contracting Officer access thereto. Anything mentioned in the specifications and not shown on the drawings, or shown on the drawings and not mentioned in the specifications, shall be of like effect as if shown or mentioned in both. In case of difference between drawings and specifications, the specifications shall govern. In case of discrepancy in the figures, in the drawings, or in the specifications, the matter shall be promptly submitted to the Contracting Officer, who shall promptly make a determination in writing. Any adjustment by the Contractor without such a determination shall be at its own risk and expense. The Contracting Officer shall furnish from time to time such detailed drawings and other information as considered necessary, unless otherwise provided.

(b) Wherever in the specifications or upon the drawings the words "directed", "required", "ordered", "designated", "prescribed", or words of like import are used, it shall be understood that the "direction", "requirement", "order", "designation", or "prescription", of the Contracting Officer is intended and similarly the words "approved", "acceptable", "satisfactory", or words of like import shall mean "approved by," or "acceptable to", or "satisfactory to" the Contracting Officer, unless otherwise expressly stated.

(c) Where "as shown," as indicated", "as detailed", or words of similar import are used, it shall be understood that the reference is made to the drawings accompanying this contract unless stated otherwise. The word "provided" as used herein shall be understood to mean "provide complete in place," that is "furnished and installed".

(d) Shop drawings means drawings, submitted to the Government by the Contractor, subcontractor, or any lower tier subcontractor pursuant to a construction contract, showing in detail (1) the proposed fabrication and assembly of structural elements, and (2) the installation (i.e., fit, and attachment details) of materials or equipment. It includes drawings, diagrams, layouts, schematics, descriptive literature, illustrations, schedules, performance and test data, and similar materials furnished by the contractor to explain in detail specific portions of the work required by the contract. The Government may duplicate, use, and disclose in any manner and for any purpose shop drawings delivered under this contract.

(e) If this contract requires shop drawings, the Contractor shall coordinate all such drawings, and review them for accuracy, completeness, and compliance with contract requirements and shall indicate its approval thereon as evidence of such coordination and review. Shop drawings submitted to the Contracting Officer without evidence of the Contractor's approval may be returned for resubmission. The Contracting Officer will indicate an approval or disapproval of the shop drawings and if not approved as submitted shall indicate the Government's reasons therefor. Any work done before such approval shall be at the Contractor's risk. Approval by the Contracting Officer shall not relieve the Contractor from responsibility for any errors or omissions in such drawings,

nor from responsibility for complying with the requirements of this contract, except with respect to variations described and approved in accordance with (f) below.

(f) If shop drawings show variations from the contract requirements, the Contractor shall describe such variations in writing, separate from the drawings, at the time of submission. If the Contracting Officer approves any such variation, the Contracting Officer shall issue an appropriate contract modification, except that, if the variation is minor or does not involve a change in price or in time of performance, a modification need not be issued.

(g) The Contractor shall submit to the Contracting Officer for approval four copies (unless otherwise indicated) of all shop drawings as called for under the various headings of these specifications. Three sets (unless otherwise indicated) of all shop drawings, will be retained by the Contracting Officer and one set will be returned to the Contractor.

52.236-26 PRECONSTRUCTION CONFERENCE (FEB 1995)

If the Contracting Officer decides to conduct a preconstruction conference, the successful offeror will be notified and will be required to attend. The Contracting Officer's notification will include specific details regarding the date, time, and location of the conference, any need for attendance by subcontractors, and information regarding the items to be discussed.

52.242-13 BANKRUPTCY (JUL 1995)

In the event the Contractor enters into proceedings relating to bankruptcy, whether voluntary or involuntary, the Contractor agrees to furnish, by certified mail or electronic commerce method authorized by the contract, written notification of the bankruptcy to the Contracting Officer responsible for administering the contract. This notification shall be furnished within five days of the initiation of the proceedings relating to bankruptcy filing. This notification shall include the date on which the bankruptcy petition was filed, the identity of the court in which the bankruptcy petition was filed, and a listing of Government contract numbers and contracting offices for all Government contracts against which final payment has not been made. This obligation remains in effect until final payment under this contract.

(End of clause)

52.242-14 SUSPENSION OF WORK (APR 1984)

(a) The Contracting Officer may order the Contractor, in writing, to suspend, delay, or interrupt all or any part of the work of this contract for the period of time that the Contracting Officer determines appropriate for the convenience of the Government.

(b) If the performance of all or any part of the work is, for an unreasonable period of time, suspended, delayed, or interrupted (1) by an act of the Contracting Officer in the administration of this contract, or (2) by the Contracting Officer's failure to act within the time specified in this contract (or within a reasonable time if not specified), an adjustment shall be made for any increase in the cost of performance of this contract (excluding profit) necessarily caused by the unreasonable suspension, delay, or interruption, and the contract modified in writing accordingly. However, no adjustment shall be made under this clause for any suspension, delay, or interruption to the extent that performance would have been so suspended, delayed, or interrupted by any other cause, including the fault or negligence of the Contractor, or for which an equitable adjustment is provided for or excluded under any other term or condition of this contract. (c) A claim under this clause shall not be allowed (1) for any costs incurred more than 20 days before the Contractor shall have notified the Contracting Officer in writing of the act or failure to act involved (but this requirement shall not apply as to a claim resulting from a suspension order), and (2) unless the claim, in an amount stated, is asserted in writing as soon as practicable after the termination of the suspension, delay, or interruption, but not later than the date of final payment under the contract.

52.243-4 CHANGES (AUG 1987)

(a) The Contracting Officer may, at any time, without notice to the sureties, if any, by written order designated or indicated to be a change order, make changes in the work within the general scope of the contract, including changes--

(1) In the specifications (including drawings and designs);

(2) In the method or manner of performance of the work;

(3) In the Government-furnished facilities, equipment, materials, services, or site; or

(4) Directing acceleration in the performance of the work.

(b) Any other written or oral order (which, as used in this paragraph (b), includes direction, instruction, interpretation, or determination) from the Contracting Officer that causes a change shall be treated as a change order under this clause; provided, that the Contractor gives the Contracting Officer written notice stating

(1) the date, circumstances, and source of the order and

(2) that the Contractor regards the order as a change order.

(c) Except as provided in this clause, no order, statement, or conduct of the Contracting Officer shall be treated as a change under this clause or entitle the Contractor to an equitable adjustment.

(d) If any change under this clause causes an increase or decrease in the Contractor's cost of, or the time required for, the performance of any part of the work under this contract, whether or not changed by any such order, the Contracting Officer shall make an equitable adjustment and modify the contract in writing. However, except for an adjustment based on defective specifications, no adjustment for any change under paragraph (b) of this clause shall be made for any costs incurred more than 20 days before the Contractor gives written notice as required. In the case of defective specifications for which the Government is responsible, the equitable adjustment shall include any increased cost reasonably incurred by the Contractor in attempting to comply with the defective specifications.

(e) The Contractor must assert its right to an adjustment under this clause within 30 days after

(1) receipt of a written change order under paragraph (a) of this clause or (2) the furnishing of a written notice under paragraph (b) of this clause, by submitting to the Contracting Officer a written statement describing the general nature and amount of the proposal, unless this period is extended by the Government. The statement of proposal for adjustment may be included in the notice under paragraph (b) above.

(f) No proposal by the Contractor for an equitable adjustment shall be allowed if asserted after final payment under this contract.

52.244-6 SUBCONTRACTS FOR COMMERCIAL ITEMS AND COMMERCIAL COMPONENTS (MAR 2001)

(a) Definitions. As used this clause--

"Commercial item", has the meaning contained in the clause at 52.202-1, Definitions.

"Subcontract", includes a transfer of commercial items between divisions, subsidiaries, or affiliates of the Contractor or subcontractor at any tier.

(b) To the maximum extent practicable, the Contractor shall incorporate, and require its subcontractors at all tiers to incorporate, commercial items or nondevelopmental items as components of items to be supplied under this contract.

(c)(1) The following clauses shall be flowed down to subcontracts for commercial items:

(i) 52.219-8, Utilization of Small Business Concerns (OCT 2000) (15 U.S.C. 637(d)(2) and (3)), in all subcontracts that offer further subcontracting opportunities. If the subcontract (except subcontracts to small business concerns) exceeds $500,000 ($1,000,000 for construction of any public facility), the subcontractor must include 52.219-8 in lower tier subcontracts that offer subcontracting opportunities.

(ii) 52.222-26, Equal Opportunity (FEB 1999) (E.O. 11246).

(iii) 52.222-35, Affirmative Action for Disabled Veterans and Veterans of the Vietnam Era (APR 1998) (38 U.S.C. 4212(a)).

(iv) 52.222-36, Affirmative Action for Workers with Disabilities (JUN 1998) (29 U.S.C. 793).

(v) 52.247-64, Preference for Privately Owned U.S.-Flagged Commercial Vessels (JUN 2000) (46 U.S.C. Appx 1241) (flowdown not required for subcontracts awarded beginning May 1, 1996).

(2) While not required, the Contractor may flow down to subcontracts for commercial items a minimal number of additional clauses necessary to satisfy its contractual obligations.

(d) The Contractor shall include the terms of this clause, including this paragraph (d), in subcontracts awarded under this contract.

52.245-2 GOVERNMENT PROPERTY (FIXED-PRICE CONTRACTS) (DEC 1989)

(a) Government-furnished property. (1) The Government shall deliver to the Contractor, for use in connection with and under the terms of this contract, the Government-furnished property described in the Schedule or specifications together with any related data and information that the Contractor may request and is reasonably required for the intended use of the property (hereinafter referred to as "Government-furnished property").

(2) The delivery or performance dates for this contract are based upon the expectation that Government-furnished property suitable for use (except for property furnished "as is") will be delivered to the Contractor at the times stated in the Schedule or, if not so stated, in sufficient time to enable the Contractor to meet the contract's delivery or performance dates.

(3) If Government-furnished property is received by the Contractor in a condition not suitable for the intended use, the Contractor shall, upon receipt of it, notify the Contracting Officer, detailing the facts, and, as directed by the Contracting Officer and at Government expense, either repair, modify, return, or otherwise dispose of the property. After completing the directed action and upon written request of the Contractor, the Contracting Officer shall make an equitable adjustment as provided in paragraph (h) of this clause.

(4) If Government-furnished property is not delivered to the Contractor by the required time, the Contracting Officer shall, upon the Contractor's timely written request, make a

determination of the delay, if any, caused the Contractor and shall make an equitable adjustment in accordance with paragraph (h) of this clause.

(b) Changes in Government-furnished property. (1) The Contracting Officer may, by written notice, (i) decrease the Government-furnished property provided or to be provided under this contract, or (ii) substitute other Government-furnished property for the property to be provided by the Government, or to be acquired by the Contractor for the Government, under this contract. The Contractor shall promptly take such action as the Contracting Officer may direct regarding the removal, shipment, or disposal of the property covered by such notice.

(2) Upon the Contractor's written request, the Contracting Officer shall make an equitable adjustment to the contract in accordance with paragraph (h) of this clause, if the Government has agreed in the Schedule to make the property available for performing this contract and there is any--

(i) Decrease or substitution in this property pursuant to subparagraph (b)(1) of this clause; or

(ii) Withdrawal of authority to use this property, if provided under any other contract or lease.

(c) Title in Government property. (1) The Government shall retain title to all Government-furnished property.

(2) All Government-furnished property and all property acquired by the Contractor, title to which vests in the Government under this paragraph (collectively referred to as "Government property"), are subject to the provisions of this clause. However, special tooling accountable to this contract is subject to the provisions of the Special Tooling clause and is not subject to the provisions of this clause. Title to Government property shall not be affected by its incorporation into or attachment to any property not owned by the Government, nor shall Government property become a fixture or lose its identity as personal property by being attached to any real property.

(3) Title to each item of facilities and special test equipment acquired by the Contractor for the Government under this contract shall pass to and vest in the Government when its use in performing this contract commences or when the Government has paid for it, whichever is earlier, whether or not title previously vested in the Government.

(4) If this contract contains a provision directing the Contractor to purchase material for which the Government will reimburse the Contractor as a direct item of cost under this contract--

(i) Title to material purchased from a vendor shall pass to and vest in the Government upon the vendor's delivery of such material; and

(ii) Title to all other material shall pass to and vest in the Government upon--

(A) Issuance of the material for use in contract performance;

(B) Commencement of processing of the material or its use in contract performance; or

(C) Reimbursement of the cost of the material by the Government, whichever occurs first.

(d) Use of Government property. The Government property shall be used only for performing this contract, unless otherwise provided in this contract or approved by the Contracting Officer.

(e) Property administration. (1) The Contractor shall be responsible and accountable for all Government property provided under this contract and shall comply with Federal Acquisition Regulation (FAR) Subpart 45.5, as in effect on the date of this contract.

(2) The Contractor shall establish and maintain a program for the use, maintenance, repair, protection, and preservation of Government property in accordance with sound industrial practice and the applicable provisions of Subpart 45.5 of the FAR.

(3) If damage occurs to Government property, the risk of which has been assumed by the Government under this contract, the Government shall replace the items or the Contractor shall make such repairs as the Government directs. However, if the Contractor cannot effect such repairs within the time required, the Contractor shall dispose of the property as directed by the Contracting Officer. When any property for which the Government is responsible is replaced or repaired, the Contracting Officer shall make an equitable adjustment in accordance with paragraph (h) of this clause.

(4) The Contractor represents that the contract price does not include any amount for repairs or replacement for which the Government is responsible. Repair or replacement of property for which the Contractor is responsible shall be accomplished by the Contractor at its own expense.

(f) Access. The Government and all its designees shall have access at all reasonable times to the premises in which any Government property is located for the purpose of inspecting the Government property.

(g) Risk of loss. Unless otherwise provided in this contract, the Contractor assumes the risk of, and shall be responsible for, any loss or destruction of, or damage to, Government property upon its delivery to the Contractor or upon passage of title to the Government under paragraph (c) of this clause. However, the Contractor is not responsible for reasonable wear and tear to Government property or for Government property properly consumed in performing this contract.

(h) Equitable adjustment. When this clause specifies an equitable adjustment, it shall be made to any affected contract provision in accordance with the procedures of the Changes clause. When appropriate, the Contracting Officer may initiate an equitable adjustment in favor of the Government. The right to an equitable adjustment shall be the Contractor's exclusive remedy. The Government shall not be liable to suit for breach of contract for--

(1) Any delay in delivery of Government-furnished property;

(2) Delivery of Government-furnished property in a condition not suitable for its intended use;

(3) A decrease in or substitution of Government-furnished property; or

(4) Failure to repair or replace Government property for which the Government is responsible.

(i) Final accounting and disposition of Government property. Upon completing this contract, or at such earlier dates as may be fixed by the Contracting Officer, the Contractor shall submit, in a form acceptable to the Contracting Officer, inventory schedules covering all items of Government property (including any resulting scrap) not consumed in performing this contract or delivered to the Government. The Contractor shall prepare for shipment, deliver f.o.b. origin, or dispose of the Government property as may be directed or authorized by the Contracting Officer. The net proceeds of any such disposal shall be credited to the contract price or shall be paid to the Government as the Contracting Officer directs.

(j) Abandonment and restoration of Contractor's premises. Unless otherwise provided herein, the Government--

(1) May abandon any Government property in place, at which time all obligations of the Government regarding such abandoned property shall cease; and

(2) Has no obligation to restore or rehabilitate the Contractor's premises under any circumstances (e.g., abandonment, disposition upon completion of need, or upon contract completion). However, if the Government-furnished property (listed in the Schedule or specifications) is withdrawn or is unsuitable for the intended use, or if other Government property is substituted, then the equitable adjustment under paragraph (h) of this clause may properly include restoration or rehabilitation costs.

(k) Communications. All communications under this clause shall be in writing.

(l) Overseas contracts. If this contract is to be performed outside of the United States of America, its territories, or possessions, the words "Government" and "Government-furnished" (wherever they appear in this clause) shall be construed as "United States Government" and "United States Government-furnished," respectively.

(End of clause)

52.245-4 GOVERNMENT-FURNISHED PROPERTY (SHORT FORM) (APR 1984)

(a) The Government shall deliver to the Contractor, at the time and locations stated in this contract, the Government-furnished property described in the Schedule or specifications. If that property, suitable for its intended use, is not delivered to the Contractor, the Contracting Officer shall equitably adjust affected provisions of this contract in accordance with the Changes clause when--

(1) The Contractor submits a timely written request for an equitable adjustment; and

(2) The facts warrant an equitable adjustment.

(b) Title to Government-furnished property shall remain in the Government. The Contractor shall use the Government-furnished property only in connection with this contract. The Contractor shall maintain adequate property control records in accordance with sound industrial practice and will make such records available for Government inspection at all reasonable times, unless the clause at Federal Acquisition Regulation 52.245-1, Property Records, is included in this contract.

(c) Upon delivery of Government-furnished property to the Contractor, the Contractor assumes the risk and responsibility for its loss or damage, except--

(1) For reasonable wear and tear;

(2) To the extent property is consumed in performing this contract; or

(3) As otherwise provided for by the provisions of this contract.

(d) Upon completing this contract, the Contractor shall follow the instructions of the Contracting Officer regarding the disposition of all Government-furnished property not consumed in performing this contract or previously delivered to the Government. The Contractor shall prepare for shipment, deliver f.o.b. origin, or dispose of the Government property, as may be directed or authorized by the Contracting Officer. The net proceeds of any such disposal shall be credited to the contract price or shall be paid to the Government as directed by the Contracting Officer.

(e) If this contract is to be performed outside the United States of America, its territories, or possessions, the words "Government" and "Government-furnished" (wherever they appear in this clause) shall be construed as "United States Government" and "United States Government-furnished," respectively.

52.246-12 INSPECTION OF CONSTRUCTION (AUG 1996)

(a) Definition. "Work" includes, but is not limited to, materials, workmanship, and manufacture and fabrication of components.

(b) The Contractor shall maintain an adequate inspection system and perform such inspections as will ensure that the work performed under the contract conforms to contract requirements. The Contractor shall maintain complete inspection records and make them available to the Government. All work shall be conducted under the general direction of the Contracting Officer and is subject to Government inspection and test at all places and at all reasonable times before acceptance to ensure strict compliance with the terms of the contract.

(c) Government inspections and tests are for the sole benefit of the Government and do not--

(1) Relieve the Contractor of responsibility for providing adequate quality control measures;

(2) Relieve the Contractor of responsibility for damage to or loss of the material before acceptance;

(3) Constitute or imply acceptance; or

(4) Affect the continuing rights of the Government after acceptance of the completed work under paragraph (i) of this section.

(d) The presence or absence of a Government inspector does not relieve the Contractor from any contract requirement, nor is the inspector authorized to change any term or condition of the specification without the Contracting Officer's written authorization.

(e) The Contractor shall promptly furnish, at no increase in contract price, all facilities, labor, and material reasonably needed for performing such safe and convenient inspections and tests as may be required by the Contracting Officer. The Government may charge to the Contractor any additional cost of inspection or test when work is not ready at the time specified by the Contractor for inspection or test, or when prior rejection makes reinspection or retest necessary. The Government shall perform all inspections and tests in a manner that will not unnecessarily delay the work. Special, full size, and performance tests shall be performed as described in the contract.

(f) The Contractor shall, without charge, replace or correct work found by the Government not to conform to contract requirements, unless in the public interest the Government consents to accept the work with an appropriate adjustment in contract price. The Contractor shall promptly segregate and remove rejected material from the premises.

(g) If the Contractor does not promptly replace or correct rejected work, the Government

may (1) by contract or otherwise, replace or correct the work and charge the cost to the Contractor or (2) terminate for default the Contractor's right to proceed.

(h) If, before acceptance of the entire work, the Government decides to examine already completed work by removing it or tearing it out, the Contractor, on request, shall promptly furnish all necessary facilities, labor, and material. If the work is found to be defective or nonconforming in any material respect due to the fault of the Contractor or its subcontractors, the Contractor shall defray the expenses of the examination and of satisfactory reconstruction. However, if the work is found to meet contract requirements, the Contracting Officer shall make an equitable adjustment for the additional services involved in the examination and reconstruction, including, if completion of the work was thereby delayed, an extension of time.

(i) Unless otherwise specified in the contract, the Government shall accept, as promptly as practicable after completion and inspection, all work required by the contract or that portion of the work the Contracting Officer determines can be accepted separately. Acceptance shall be final and conclusive except for latent defects, fraud, gross mistakes amounting to fraud, or the Government's rights under any warranty or guarantee.

52.246-13 INSPECTION--DISMANTLING, DEMOLITION, OR REMOVAL OF IMPROVEMENTS (AUG 1996)

(a) Unless otherwise designated by the specifications, all workmanship performed under the contract is subject to Government inspection at all times and places where dismantling or demolition work is being performed. The Contractor shall furnish promptly, and at no increase in contract price all reasonable facilities, labor, and materials necessary for safe and convenient inspection by the Government. The Government shall perform inspections in a manner that will not unduly delay the work.

(b) The Contractor is responsible for damage to property caused by defective workmanship. The Contractor shall promptly segregate and remove from the premises any unsatisfactory facilities, materials, and equipment used in contract performance, and promptly replace them with satisfactory items. If the Contractor fails to proceed at once in a workmanlike manner with performance of the work or with the correction of defective workmanship, the Government may (1) by contract or otherwise, replace the facilities, materials, and equipment or correct the workmanship and charge the cost to the Contractor and (2) terminate for default the Contractor's right to proceed. The Contractor and any surety shall be liable, to the extent specified in the contract for any damage or cost of repair or replacement.

52.248-3 VALUE ENGINEERING--CONSTRUCTION (FEB 2000) - ALTERNATE I (APR 1984)

(a) General. The Contractor is encouraged to develop, prepare, and submit value engineering change proposals (VECP's) voluntarily. The Contractor shall share in any instant contract savings realized from accepted VECP's, in accordance with paragraph (f) below.

(b) Definitions. "Collateral costs," as used in this clause, means agency costs of operation, maintenance, logistic support, or Government-furnished property.

"Collateral savings," as used in this clause, means those measurable net reductions resulting from a VECP in the agency's overall projected collateral costs, exclusive of acquisition savings, whether or not the acquisition cost changes.

"Contractor's development and implementation costs," as used in this clause, means those costs the Contractor incurs on a VECP specifically in developing, testing, preparing, and submitting the VECP, as well as those costs the Contractor incurs to make the contractual changes required by Government acceptance of a VECP.

"Government costs," as used in this clause, means those agency costs that result directly from developing and implementing the VECP, such as any net increases in the cost of testing, operations, maintenance, and logistic support. The term does not include the normal administrative costs of processing the VECP.

"Instant contract savings," as used in this clause, means the estimated reduction in Contractor cost of performance resulting from acceptance of the VECP, minus allowable Contractor's development and implementation costs, including subcontractors' development and implementation costs (see paragraph (h) below).

"Value engineering change proposal (VECP)" means a proposal that--

(1) Requires a change to this, the instant contract, to implement; and

(2) Results in reducing the contract price or estimated cost without impairing essential functions or characteristics; provided, that it does not involve a change--

(i) In deliverable end item quantities only; or

(ii) To the contract type only.

(c) VECP preparation. As a minimum, the Contractor shall include in each VECP the information described in subparagraphs (1) through (7) below. If the proposed change is affected by contractually required configuration management or similar procedures, the instructions in those procedures relating to format, identification, and priority assignment shall govern VECP preparation. The VECP shall include the following:

(1) A description of the difference between the existing contract requirement and that proposed, the comparative advantages and disadvantages of each, a justification when an

item's function or characteristics are being altered, and the effect of the change on the end item's performance.

(2) A list and analysis of the contract requirements that must be changed if the VECP is accepted, including any suggested specification revisions.

(3) A separate, detailed cost estimate for (i) the affected portions of the existing contract requirement and (ii) the VECP. The cost reduction associated with the VECP shall take into account the Contractor's allowable development and implementation costs, including any amount attributable to subcontracts under paragraph (h) below.

(4) A description and estimate of costs the Government may incur in implementing the VECP, such as test and evaluation and operating and support costs.

(5) A prediction of any effects the proposed change would have on collateral costs to the agency.

(6) A statement of the time by which a contract modification accepting the VECP must be issued in order to achieve the maximum cost reduction, noting any effect on the contract completion time or delivery schedule.

(7) Identification of any previous submissions of the VECP, including the dates submitted, the agencies and contract numbers involved, and previous Government actions, if known.

(d) Submission. The Contractor shall submit VECP's to the Resident Engineer at the worksite, with a copy to the Contracting Officer.

(e) Government action. (1) The Contracting Officer shall notify the Contractor of the status of the VECP within 45 calendar days after the contracting office receives it. If additional time is required, the Contracting Officer shall notify the Contractor within the 45-day period and provide the reason for the delay and the expected date of the decision. The Government will process VECP's expeditiously; however, it shall not be liable for any delay in acting upon a VECP.

(2) If the VECP is not accepted, the Contracting Officer shall notify the Contractor in writing, explaining the reasons for rejection. The Contractor may withdraw any VECP, in whole or in part, at any time before it is accepted by the Government. The Contracting Officer may require that the Contractor provide written notification before undertaking significant expenditures for VECP effort.

(3) Any VECP may be accepted, in whole or in part, by the Contracting Officer's award of a modification to this contract citing this clause. The Contracting Officer may accept the VECP, even though an agreement on price reduction has not been reached, by issuing the Contractor a notice to proceed with the change. Until a notice to proceed is issued or a contract modification applies a VECP to this contract, the Contractor shall perform in

accordance with the existing contract. The decision to accept or reject all or part of any VECP is a unilateral decision made solely at the discretion of the Contracting Officer.

(f) Sharing.

(1) Rates. The Government's share of savings is determined by subtracting Government costs from instant contract savings and multiplying the result by (i) 45 percent for fixed-price contracts or (ii) 75 percent for cost-reimbursement contracts.

(2) Payment. Payment of any share due the Contractor for use of a VECP on this contract shall be authorized by a modification to this contract to--

(i) Accept the VECP;

(ii) Reduce the contract price or estimated cost by the amount of instant contract savings; and

(iii) Provide the Contractor's share of savings by adding the amount calculated to the contract price or fee.

(g) Subcontracts. The Contractor shall include an appropriate value engineering clause in any subcontract of $50,000 or more and may include one in subcontracts of lesser value. In computing any adjustment in this contract's price under paragraph (f) above, the Contractor's allowable development and implementation costs shall include any subcontractor's allowable development and implementation costs clearly resulting from a VECP accepted by the Government under this contract, but shall exclude any value engineering incentive payments to a subcontractor. The Contractor may choose any arrangement for subcontractor value engineering incentive payments; provided, that these payments shall not reduce the Government's share of the savings resulting from the VECP.

(h) Data. The Contractor may restrict the Government's right to use any part of a VECP or the supporting data by marking the following legend on the affected parts:

"These data, furnished under the Value Engineering--Construction clause of contract . . . . . , shall not be disclosed outside the Government or duplicated, used, or disclosed, in whole or in part, for any purpose other than to evaluate a value engineering change proposal submitted under the clause. This restriction does not limit the Government's right to use information contained in these data if it has been obtained or is otherwise available from the Contractor or from another source without limitations."

If a VECP is accepted, the Contractor hereby grants the Government unlimited rights in the VECP and supporting data, except that, with respect to data qualifying and submitted as limited rights technical data, the Government shall have the rights specified in the contract modification implementing the VECP and shall appropriately mark the data.

(The terms "unlimited rights" and "limited rights" are defined in Part 27 of the Federal Acquisition Regulation.)

(j) Collateral savings. If a VECP is accepted, the Contracting Officer will increase the instant contract amount by 20 percent of any projected collateral savings determined to be realized in a typical year of use after subtracting any Government costs not previously offset. However, the Contractor's share of collateral savings will not exceed the contract's firm-fixed-price or estimated cost, at the time the VECP is accepted, or $100,000, whichever is greater. The Contracting Officer will be the sole determiner of the amount of collateral savings.

(End of clause)

52.249-1 TERMINATION FOR CONVENIENCE OF THE GOVERNMENT (FIXED-PRICE) (SHORT FORM) (APR 1984)

The Contracting Officer, by written notice, may terminate this contract, in whole or in part, when it is in the Government's interest. If this contract is terminated, the rights, duties, and obligations of the parties, including compensation to the Contractor, shall be in accordance with Part 49 of the Federal Acquisition Regulation in effect on the date of this contract.

52.249-2 TERMINATION FOR CONVENIENCE OF THE GOVERNMENT (FIXED-PRICE) (SEP 1996) - ALTERNATE I (SEP 1996)

(a) The Government may terminate performance of work under this contract in whole or, from time to time, in part if the Contracting Officer determines that a termination is in the Government's interest. The Contracting Officer shall terminate by delivering to the Contractor a Notice of Termination specifying the extent of termination and the effective date.

(b) After receipt of a Notice of Termination, and except as directed by the Contracting Officer, the Contractor shall immediately proceed with the following obligations, regardless of any delay in determining or adjusting any amounts due under this clause:

(1) Stop work as specified in the notice.

(2) Place no further subcontracts or orders (referred to as subcontracts in this clause) for materials, services, or facilities, except as necessary to complete the continued portion of the contract.

(3) Terminate all subcontracts to the extent they relate to the work terminated.

(4) Assign to the Government, as directed by the Contracting Officer, all right, title, and interest of the Contractor under the subcontracts terminated, in which case the Government shall have the right to settle or to pay any termination settlement proposal arising out of those terminations.

(5) With approval or ratification to the extent required by the Contracting Officer, settle all outstanding liabilities and termination settlement proposals arising from the termination of subcontracts; the approval or ratification will be final for purposes of this clause.

(6) As directed by the Contracting Officer, transfer title and deliver to the Government (i) the fabricated or unfabricated parts, work in process, completed work, supplies, and other material produced or acquired for the work terminated, and (ii) the completed or partially completed plans, drawings, information, and other property that, if the contract had been completed, would be required to be furnished to the Government.

(7) Complete performance of the work not terminated.

(8) Take any action that may be necessary, or that the Contracting Officer may direct, for the protection and preservation of the property related to this contract that is in the possession of the Contractor and in which the Government has or may acquire an interest.

(9) Use its best efforts to sell, as directed or authorized by the Contracting Officer, any property of the types referred to in subparagraph (b)(6) of this clause; provided, however, that the Contractor (i) is not required to extend credit to any purchaser and (ii) may acquire the property under the conditions prescribed by, and at prices approved by, the Contracting Officer. The proceeds of any transfer or disposition will be applied to reduce any payments to be made by the Government under this contract, credited to the price or cost of the work, or paid in any other manner directed by the Contracting Officer.

(c) The Contractor shall submit complete termination inventory schedules no later than 120 days from the effective date of termination, unless extended in writing by the Contracting Officer upon written request of the Contractor within this 120-day period.

(d) After expiration of the plant clearance period as defined in Subpart 45.6 of the Federal Acquisition Regulation, the Contractor may submit to the Contracting Officer a list, certified as to quantity and quality, of termination inventory not previously disposed of, excluding items authorized for disposition by the Contracting Officer. The Contractor may request the Government to remove those items or enter into an agreement for their storage. Within 15 days, the Government will accept title to those items and remove them or enter into a storage agreement. The Contracting Officer may verify the list upon removal of the items, or if stored, within 45 days from submission of the list, and shall correct the list, as necessary, before final settlement.

(e) After termination, the Contractor shall submit a final termination settlement proposal to the Contracting Officer in the form and with the certification prescribed by the

Contracting Officer. The Contractor shall submit the proposal promptly, but no later than 1 year from the effective date of termination, unless extended in writing by the Contracting Officer upon written request of the Contractor within this 1-year period. However, if the Contracting Officer determines that the facts justify it, a termination settlement proposal may be received and acted on after 1 year or any extension. If the Contractor fails to submit the proposal within the time allowed, the Contracting Officer may determine, on the basis of information available, the amount, if any, due the Contractor because of the termination and shall pay the amount determined.

(f) Subject to paragraph (e) of this clause, the Contractor and the Contracting Officer may agree upon the whole or any part of the amount to be paid or remaining to be paid because of the termination. The amount may include a reasonable allowance for profit on work done. However, the agreed amount, whether under this paragraph (g) or paragraph (g) of this clause, exclusive of costs shown in subparagraph (g)(3) of this clause, may not exceed the total contract price as reduced by (1) the amount of payments previously made and (2) the contract price of work not terminated. The contract shall be modified, and the Contractor paid the agreed amount. Paragraph (g) of this clause shall not limit, restrict, or affect the amount that may be agreed upon to be paid under this paragraph.

(g) If the Contractor and Contracting Officer fail to agree on the whole amount to be paid the Contractor because of the termination of work, the Contracting Officer shall pay the Contractor the amounts determined as follows, but without duplication of any amounts agreed upon under paragraph (f) of this clause:

(1) For contract work performed before the effective date of termination, the total (without duplication of any items) of--

(i) The cost of this work;

(ii) The cost of settling and paying termination settlement proposals under terminated subcontracts that are properly chargeable to the terminated portion of the contract if not included in subdivision (g)(1)(i) of this clause; and

(iii) A sum, as profit on subdivision (g)(1)(i) of this clause, determined by the Contracting Officer under 49.202 of the Federal Acquisition Regulation, in effect on the date of this contract, to be fair and reasonable; however, if it appears that the Contractor would have sustained a loss on the entire contract had it been completed, the Contracting Officer shall allow no profit under this subdivision (iii) and shall reduce the settlement to reflect the indicated rate of loss.

(2) The reasonable costs of settlement of the work terminated, including--

(i) Accounting, legal, clerical, and other expenses reasonably necessary for the preparation of termination settlement proposals and supporting data;

(ii) The termination and settlement of subcontracts (excluding the amounts of such settlements); and

(iii) Storage, transportation, and other costs incurred, reasonably necessary for the preservation, protection, or disposition of the termination inventory.

(h) Except for normal spoilage, and except to the extent that the Government expressly assumed the risk of loss, the Contracting Officer shall exclude from the amounts payable to the Contractor under paragraph (g) of this clause, the fair value, as determined by the Contracting Officer, of property that is destroyed, lost, stolen, or damaged so as to become undeliverable to the Government or to a buyer.

(i) The cost principles and procedures of Part 31 of the Federal Acquisition Regulation, in effect on the date of this contract, shall govern all costs claimed, agreed to, or determined under this clause.

(j) The Contractor shall have the right of appeal, under the Disputes clause, from any determination made by the Contracting Officer under paragraph (e), (g), or (l) of this clause, except that if the Contractor failed to submit the termination settlement proposal or request for equitable adjustment within the time provided in paragraph (e) or (l), respectively, and failed to request a time extension, there is no right of appeal.

(k) In arriving at the amount due the Contractor under this clause, there shall be deducted--

(1) All unliquidated advance or other payments to the Contractor under the terminated portion of this contract;

(2) Any claim which the Government has against the Contractor under this contract; and

(3) The agreed price for, or the proceeds of sale of, materials, supplies, or other things acquired by the Contractor or sold under the provisions of this clause and not recovered by or credited to the Government.

(l) If the termination is partial, the Contractor may file a proposal with the Contracting Officer for an equitable adjustment of the price(s) of the continued portion of the contract. The Contracting Officer shall make any equitable adjustment agreed upon. Any proposal by the Contractor for an equitable adjustment under this clause shall be requested within 90 days from the effective date of termination unless extended in writing by the Contracting Officer.

(m)(1) The Government may, under the terms and conditions it prescribes, make partial payments and payments against costs incurred by the Contractor for the terminated portion of the contract, if the Contracting Officer believes the total of these payments will not exceed the amount to which the Contractor will be entitled.

(2) If the total payments exceed the amount finally determined to be due, the Contractor shall repay the excess to the Government upon demand, together with interest computed at the rate established by the Secretary of the Treasury under 50 U.S.C. App. 1215(b)(2). Interest shall be computed for the period from the date the excess payment is received by the Contractor to the date the excess is repaid. Interest shall not be charged on any excess payment due to a reduction in the Contractor's termination settlement proposal because of retention or other disposition of termination inventory until 10 days after the date of the retention or disposition, or a later date determined by the Contracting Officer because of the circumstances.

(n) Unless otherwise provided in this contract or by statute, the Contractor shall maintain all records and documents relating to the terminated portion of this contract for 3 years after final settlement. This includes all books and other evidence bearing on the Contractor's costs and expenses under this contract. The Contractor shall make these records and documents available to the Government, at the Contractor's office, at all reasonable times, without any direct charge. If approved by the Contracting Officer, photographs, microphotographs, or other authentic reproductions may be maintained instead of original records and documents.

52.249-3 TERMINATION FOR CONVENIENCE OF THE GOVERNMENT (DISMANTLING, DEMOLITION, OR REMOVAL OF IMPROVEMENTS) (SEP 1996)

(a) The Government may terminate performance of work under this contract, in whole or, from time to time, in part if the Contracting Officer determines that a termination is in the Government's interest. The Contracting Officer shall terminate by delivering to the Contractor a Notice of Termination specifying the extent of termination and the effective date. Upon receipt of the notice, if title to property is vested in the Contractor under this contract, it shall revest in the Government regardless of any other clause of this contract, except for property that the Contractor disposed of by bona fide sale or removed from the site.

(b) After receipt of a Notice of Termination, and except as directed by the Contracting Officer, the Contractor shall immediately proceed with the following obligations, regardless of delay in determining or adjusting any amounts due under this clause:

(1) Stop work as specified in the notice.

(2) Place no further subcontracts or orders (referred to as subcontracts in this clause) for materials, services, or facilities, except as necessary to complete the continued portion of the contract.

(3) Terminate all subcontracts to the extent they relate to the work terminated.

(4) Assign to the Government, as directed by the Contracting Officer, all right, title, and interest of the Contractor under the subcontracts terminated, in which case the Government shall have the right to settle or to pay any termination settlement proposal arising out of those terminations.

(5) With approval or ratification to the extent required by the Contracting Officer, settle all outstanding liabilities and termination settlement proposals arising from the termination of subcontracts; the approval or ratification will be final for purposes of this clause.

(6) As directed by the Contracting Officer, transfer title and deliver to the Government (i) the fabricated or unfabricated parts, work in process, completed work, supplies, and other material produced or acquired for the work terminated, and (ii) the completed or partially completed plans, drawings, information, and other property that, if the contract has been completed, would be required to be furnished to the Government.

(7) Complete performance of the work not terminated.

(8) Take any action that may be necessary, or that the Contracting Officer may direct, for the protection and preservation of the property related to this contract that is in the possession of the Contractor and in which the Government has or may acquire an interest.

(9) Use its best efforts to sell, as directed or authorized by the Contracting Officer, any property of the types referred to in subparagraph (b)(6) of this clause; provided, however, that the Contractor (i) is not required to extend credit to any purchaser and (ii) may acquire the property under the conditions prescribed by, and at prices approved by, the Contracting Officer. The proceeds of any transfer or disposition will be applied to reduce any payments to be made by the Government under this contract, credited to the price or cost of the work, or paid in any other manner directed by the Contracting Officer.

(c) The Contractor shall submit complete termination inventory schedules no later than 120 days from the effective date of termination, unless extended in writing by the Contracting Officer upon written request of the Contractor within this 120-day period.

(d) After expiration of the plant clearance period as defined in Subpart 45.6 of the Federal Acquisition Regulation, the Contractor may submit to the Contracting Officer a list, certified as to quantity and quality, of termination inventory not previously disposed of, excluding items authorized for disposition by the Contracting Officer. The Contractor may request the Government to remove those items or enter into an agreement for their storage. Within 15 days, the Government will accept title to those items and remove them or enter into a storage agreement. The Contracting Officer may verify the list upon removal of the items, or if stored, within 45 days from submission of the list, and shall correct the list, as necessary, before final settlement.

(e) After termination, the Contractor shall submit a final termination settlement proposal to the Contracting Officer in the form and with the certification prescribed by the

Contracting Officer. The Contractor shall submit the proposal promptly, but no later than 1 year from the effective date of termination, unless extended in writing by the Contracting Officer upon written request of the Contractor within this 1-year period. However, if the Contracting Officer determines that the facts justify it, a termination settlement proposal may be received and acted on after 1 year or any extension. If the Contractor fails to submit the proposal within the time allowed, the Contracting Officer may determine, on the basis of information available, the amount, if any, due the Contractor because of the termination and shall pay the amount determined.

(f) Subject to paragraph (e) of this clause, the Contractor and the Contracting Officer may agree upon the whole or any part of the amount to be paid because of the termination. The amount may include a reasonable allowance for profit on work done. However, the agreed amount, whether under this paragraph (f) or paragraph (g) of this clause, exclusive of settlement costs, may not exceed the total contract price as reduced by (1) the amount of payments previously made and (2) the contract price of work not terminated. The contract shall be amended and the Contractor paid the agreed amount. Paragraph (g) of this clause shall not limit, restrict, or affect the amount that may be agreed upon to be paid under this paragraph.

(g) If the Contractor and the Contracting Officer fail to agree on the whole amount to be paid because of the termination of work, the Contracting Officer shall pay the Contractor the amounts determined by the Contracting Officer as follows, but without duplication of any amounts agreed on under paragraph (f) of this clause:

(1) For contract work performed before the effective date of termination, the total (without duplication of any items) of--

(i) The cost of this work;

(ii) The cost of settling and paying termination settlement proposals under terminated subcontracts that are properly chargeable to the terminated portion of the contract, if not included in subdivision (g)(1)(i) of this clause; and

(iii) A sum, as profit on subdivision (g)(1)(i) of this clause, determined by the Contracting Officer under section 49.202 of the Federal Acquisition Regulation, in effect on the date of this contract, to be fair and reasonable; however, if it appears that the Contractor would have sustained a loss on the entire contract had it been completed, the Contracting Officer shall allow no profit under this subdivision (iii) and shall reduce the amount of the settlement to reflect the indicated rate of loss.

(2) The reasonable costs of settlement of the work terminated, including--

(i) Accounting, legal, clerical, and other expenses reasonably necessary for the preparation of termination settlement proposals and supporting data;

(ii) The termination and settlement of subcontracts (excluding the amounts of such settlements); and

(iii) Preservation and protection of property under subparagraph (b)(8) of this clause.

(h) Except for normal spoilage, and except to the extent that the Government expressly assumed the risk of loss, the Contracting Officer shall exclude from the amounts payable to the Contractor under paragraph (g) of this clause, the fair value as determined by the Contracting Officer, of property that is destroyed, lost, stolen, or damaged so as to become undeliverable to the Government or to a buyer.

(i) The cost principles and procedures of Part 31 of the Federal Acquisition Regulation, in effect on the date of this contract, shall govern all costs claimed, agreed to, or determined under this clause.

(j) The Contractor shall have the right of appeal, under the Disputes clause, from any determination made by the Contracting Officer under paragraph (e), (g), or (l) of this clause, except that if the Contractor failed to submit the termination settlement proposal within the time provided in paragraph (e) or (l) and failed to request a time extension, there is no right of appeal. If the Contracting Officer has made a determination of the amount due under paragraph (e), (g), or (l) of this clause, the Government shall pay the Contractor (1) the amount determined by the Contracting Officer, if there is no right of appeal or if no timely appeal has been taken, or (2) the amount finally determined on an appeal.

(k) In arriving at the amount due the Contractor under this clause, there shall be deducted--

(1) All unliquidated advance or other payments to the Contractor under the terminated portion of this contract;

(2) Any claim which the Government has against the Contractor under this contract; and

(3) The agreed price for, or the proceeds of sale of, materials, supplies, or other things acquired by the Contractor or sold under the provisions of this clause and not recovered by or credited to the Government.

(l) If the termination is partial, the Contractor may file a proposal with the Contracting Officer for an equitable adjustment of the price(s) of the continued portion of the contract. The Contracting Officer shall make any equitable adjustment agreed upon. Any proposal by the Contractor for an equitable adjustment under this clause shall be requested within 90 days from the effective date of termination unless extended in writing by the Contracting Officer.

(m)(1) The Government may, under the terms and conditions it prescribes, make partial payments and payments against cost incurred by the Contractor for the terminated portion

of the contract, if the Contracting Officer believes the total of these payments will not exceed the amount to which the Contractor will be entitled.

(2) If the total payments exceed the amount finally determined to be due, the Contractor shall repay the excess to the Government upon demand, together with interest computed at the rate established by the Secretary of the Treasury under 50 U.S.C. App 1215(b)(2). Interest shall be computed for the period from the date the excess payment is received by the Contractor to the date the excess is repaid. Interest shall not be charged on any excess payment due to a reduction in the Contractor's termination settlement proposal because of retention or other disposition of termination inventory until 10 days after the date of the retention or disposition, or a later date determined by the Contracting Officer because of the circumstances.

(n) Unless otherwise provided in this contract or by statute, the Contractor shall maintain all records and documents relating to the terminated portion of this contract for 3 years after final settlement. This includes all books and other evidence bearing on the Contractor's costs and expenses under this contract. The Contractor shall make these records and documents available to the Government, at the Contractor's office, at all reasonable times, without any direct charge. If approved by the Contracting Officer, photographs, microphotographs, or other authentic reproductions may be maintained instead of original records and documents.

52.249-10 DEFAULT (FIXED-PRICE CONSTRUCTION) (APR 1984)

(a) If the Contractor refuses or fails to prosecute the work or any separable part, with the diligence that will insure its completion within the time specified in this contract including any extension, or fails to complete the work within this time, the Government may, by written notice to the Contractor, terminate the right to proceed with the work (or the separable part of the work) that has been delayed. In this event, the Government may take over the work and complete it by contract or otherwise, and may take possession of and use any materials, appliances, and plant on the work site necessary for completing the work. The Contractor and its sureties shall be liable for any damage to the Government resulting from the Contractor's refusal or failure to complete the work within the specified time, whether or not the Contractor's right to proceed with the work is terminated. This liability includes any increased costs incurred by the Government in completing the work.

(b) The Contractor's right to proceed shall not be terminated nor the Contractor charged with damages under this clause, if--

(1) The delay in completing the work arises from unforeseeable causes beyond the control and without the fault or negligence of the Contractor. Examples of such causes include

(i) acts of God or of the public enemy,

(ii) acts of the Government in either its sovereign or contractual capacity,

(iii) acts of another Contractor in the performance of a contract with the Government,

(iv) fires,

(v) floods,

(vi) epidemics,

(vii) quarantine restrictions,

(viii) strikes,

(ix) freight embargoes,

(x) unusually severe weather, or delays of subcontractors or suppliers at any tier arising from unforeseeable causes beyond the control and without the fault or negligence of both the Contractor and the subcontractors or suppliers; and

(2) The Contractor, within 10 days from the beginning of any delay (unless extended by the Contracting Officer), notifies the Contracting Officer in writing of the causes of delay. The Contracting Officer shall ascertain the facts and the extent of delay. If, in the judgment of the Contracting Officer, the findings of fact warrant such action, the time for completing the work shall be extended. The findings of the Contracting Officer shall be final and conclusive on the parties, but subject to appeal under the Disputes clause.

(c) If, after termination of the Contractor's right to proceed, it is determined that the Contractor was not in default, or that the delay was excusable, the rights and obligations of the parties will be the same as if the termination had been issued for the convenience of the Government.

The rights and remedies of the Government in this clause are in addition to any other rights and remedies provided by law or under this contract.

52.252-2 CLAUSES INCORPORATED BY REFERENCE (FEB 1998)

This contract incorporates one or more clauses by reference, with the same force and effect as if they were given in full text. Upon request, the Contracting Officer will make their full text available. Also, the full text of a clause may be accessed electronically at this/these address(es):

http://www.arnet.gov/far
http://farsite.hill.af.mil

http://www.dtic.mil/dfars

52.252-4 ALTERATIONS IN CONTRACT (APR 1984)

Portions of this contract are altered as follows:

N/A

(End of clause)

52.252-6 AUTHORIZED DEVIATIONS IN CLAUSES (APR 1984)

(a) The use in this solicitation or contract of any Federal Acquisition Regulation (48 CFR Chapter 1) clause with an authorized deviation is indicated by the addition of "(DEVIATION)" after the date of the clause.

(b) The use in this solicitation or contract of any DoD FAR Supplement (48 CFR Chapter 2) clause with an authorized deviation is indicated by the addition of "(DEVIATION)" after the name of the regulation.

52.253-1 COMPUTER GENERATED FORMS (JAN 1991)

(a) Any data required to be submitted on a Standard or Optional Form prescribed by the Federal Acquisition Regulation (FAR) may be submitted on a computer generated version of the form, provided there is no change to the name, content, or sequence of the data elements on the form, and provided the form carries the Standard or Optional Form number and edition date.

(b) Unless prohibited by agency regulations, any data required to be submitted on an agency unique form prescribed by an agency supplement to the FAR may be submitted on a computer generated version of the form provided there is no change to the name, content, or sequence of the data elements on the form and provided the form carries the agency form number and edition date.

(c) If the Contractor submits a computer generated version of a form that is different than the required form, then the rights and obligations of the parties will be determined based on the content of the required form.

252.201-7000 CONTRACTING OFFICER'S REPRESENTATIVE (DEC 1991)

(a) "Definition. Contracting officer's representative" means an individual designated in accordance with subsection 201.602-2 of the Defense Federal Acquisition Regulation Supplement and authorized in writing by the contracting officer to perform specific technical or administrative functions.

(b) If the Contracting Officer designates a contracting officer's representative (COR), the Contractor will receive a copy of the written designation. It will specify the extent of the COR's authority to act on behalf of the contracting officer. The COR is not authorized to make any commitments or changes that will affect price, quality, quantity, delivery, or any other term or condition of the contract.

(End of clause)

252.203-7001 PROHIBITION ON PERSONS CONVICTED OF FRAUD OR OTHER DEFENSE-CONTRACT-RELATED FELONIES (MAR 1999)

(a) Definitions. As used in this clause—

(1) “Arising out of a contract with the DoD” means any act in connection with—

(i) Attempting to obtain;

(ii) Obtaining, or

(iii) Performing a contract or first-tier subcontract of any agency, department, or component of the Department of Defense (DoD).

(2) “Conviction of fraud or any other felony” means any conviction for fraud or a felony in violation of state or Federal criminal statutes, whether entered on a verdict or plea, including a plea of *nolo contendere*, for which sentence has been imposed.

(3) “Date of conviction” means the date judgment was entered against the individual.

(b) Any individual who is convicted after September 29, 1988, of fraud or any other felony arising out of a contract with the DoD is prohibited from serving--

(1) In a management or supervisory capacity on any DoD contract or first-tier subcontract;

(2) On the board of directors of any DoD contractor or first-tier subcontractor;

(3) As a consultant, agent, or representative for any DoD contractor or first-tier subcontractor; or

(4) In any other capacity with the authority to influence, advise, or control the decisions of any DoD contractor or subcontractor with regard to any DoD contract or first-tier subcontract.

(c) Unless waived, the prohibition in paragraph (b) of this clause applies for not less than 5 years from the date of conviction.

(d) 10 U.S.C. 2408 provides that a defense contractor or first-tier subcontractor shall be subject to a criminal penalty of not more than $500,000 if convicted of knowingly—

(1) Employing a person under a prohibition specified in paragraph (b) of this clause; or

(2) Allowing such a person to serve on the board of directors of the contractor or first-tier subcontractor.

(e) In addition to the criminal penalties contained in 10 U.S.C. 2408, the Government may consider other available remedies, such as—

(1) Suspension or debarment;

(2) Cancellation of the contract at no cost to the Government; or

(3) Termination of the contract for default.

(f) The Contractor may submit written requests for waiver of the prohibition in paragraph (b) of this clause to the Contracting Officer. Requests shall clearly identify—

(1) The person involved;

(2) The nature of the conviction and resultant sentence or punishment imposed;

(3) The reasons for the requested waiver; and

(4) An explanation of why a waiver is in the interest of national security.

(g) The Contractor agrees to include the substance of this clause, appropriately modified to reflect the identity and relationship of the parties, in all first-tier subcontracts exceeding the simplified acquisition threshold in Part 2 of the Federal Acquisition Regulation, except those for commercial items or components.

(h) Pursuant to 10 U.S.C. 2408(c), defense contractors and subcontractors may obtain information as to whether a particular person has been convicted of fraud or any other felony arising out of a contract with the DoD by contacting The Office of Justice Programs, The Denial of Federal Benefits Office, U.S. Department of Justice, telephone (202) 616-3507.

(End of clause)

252.204-7004 REQUIRED CENTRAL CONTRACTOR REGISTRATION.(MAR 2000)

(a) Definitions.

As used in this clause--

(1) Central Contractor Registration (CCR) database means the primary DoD repository for contractor information required for the conduct of business with DoD.

(2) Data Universal Numbering System (DUNS) number means the 9-digit number assigned by Dun and Bradstreet Information Services to identify unique business entities.

(3) Data Universal Numbering System +4 (DUNS+4) number means the DUNS number assigned by Dun and Bradstreet plus a 4-digit suffix that may be assigned by a parent (controlling) business concern. This 4-digit suffix may be assigned at the discretion of the parent business concern for such purposes as identifying subunits or affiliates of the parent business concern.

(4) Registered in the CCR database means that all mandatory information, including the DUNS number or the DUNS+4 number, if applicable, and the corresponding Commercial and Government Entity (CAGE) code, is in the CCR database; the DUNS number and the CAGE code have been validated; and all edits have been successfully completed.

(b)(1) By submission of an offer, the offeror acknowledges the requirement that a prospective awardee must be registered in the CCR database prior to award, during performance, and through final payment of any contract resulting from this solicitation, except for awards to foreign vendors for work to be performed outside the United States.

(2) The offeror shall provide its DUNS or, if applicable, its DUNS+4 number with its offer, which will be used by the Contracting Officer to verify that the offeror is registered in the CCR database.

(3) Lack of registration in the CCR database will make an offeror ineligible for award.

(4) DoD has established a goal of registering an applicant in the CCR database within 48 hours after receipt of a complete and accurate application via the Internet. However, registration of an applicant submitting an application through a method other than the Internet may take up to 30 days. Therefore, offerors that are not registered should consider applying for registration immediately upon receipt of this solicitation.

(c) The Contractor is responsible for the accuracy and completeness of the data within the CCR, and for any liability resulting from the Government's reliance on inaccurate or incomplete data. To remain registered in the CCR database after the initial registration, the Contractor is required to confirm on an annual basis that its information in the CCR database is accurate and complete.

(d) Offerors and contractors may obtain information on registration and annual confirmation requirements by calling 1-888-227-2423, or via the Internet at http://www.ccr2000.com.

(End of clause)

252.209-7004 SUBCONTRACTING WITH FIRMS THAT ARE OWNED OR CONTROLLED BY THE GOVERNMENT OF A TERRORIST COUNTRY (MAR 1998)

(a) Unless the Government determines that there is a compelling reason to do so, the Contractor shall not enter into any subcontract in excess of $25,000 with a firm, or subsidiary of a firm, that is identified, on the List of Parties Excluded from Federal Procurement and Nonprocurement Programs, as being ineligible for the award of Defense contracts or subcontracts because it is owned or controlled by the government of a terrorist country.

(b) A corporate officer or a designee of the Contractor shall notify the Contracting Officer, in writing, before entering into a subcontract with a party that is identified, on the List of Parties Excluded from Federal Procurement and Nonprocurement Programs, as being ineligible for the award of Defense contracts or subcontracts because it is owned or controlled by the government of a terrorist country. The notice must include the name of the proposed subcontractor notwithstanding its inclusion on the List of Parties Excluded From Federal Procurement and Nonprocurement Programs.

252.223-7001 HAZARD WARNING LABELS (DEC 1991)

(a) "Hazardous material," as used in this clause, is defined in the Hazardous Material Identification and Material Safety Data clause of this contract.

(b) The Contractor shall label the item package (unit container) of any hazardous material to be delivered under this contract in accordance with the Hazard Communication Standard (29 CFR 1910.1200 et seq). The Standard requires that the hazard warning label conform to the requirements of the standard unless the material is otherwise subject to the labeling requirements of one of the following statutes:

(1) Federal Insecticide, Fungicide and Rodenticide Act;

(2) Federal Food, Drug and Cosmetics Act;

(3) Consumer Product Safety Act;

(4) Federal Hazardous Substances Act; or

(5) Federal Alcohol Administration Act.

(c) The Offeror shall list which hazardous material listed in the Hazardous Material Identification and Material Safety Data clause of this contract will be labeled in accordance with one of the Acts in paragraphs (b)(1) through

(5) of this clause instead of the Hazard Communication Standard. Any hazardous material not listed will be interpreted to mean that a label is required in accordance with the Hazard Communication Standard.

MATERIAL (If None, Insert "None.")	ACT
_____	_____
_____	_____

(d) The apparently successful Offeror agrees to submit, before award, a copy of the hazard warning label for all hazardous materials not listed in paragraph (c) of this clause. The Offeror shall submit the label with the Material Safety Data Sheet being furnished under the Hazardous Material Identification and Material Safety Data clause of this contract.

(e) The Contractor shall also comply with MIL-STD-129, Marking for Shipment and Storage (including revisions adopted during the term of this contract).

(End of clause)

252.223-7004 DRUG-FREE WORK FORCE (SEP 1988)

(a) Definitions.

(1) "Employee in a sensitive position," as used in this clause, means an employee who has been granted access to classified information; or employees in other positions that the Contractor determines involve national security; health or safety, or functions other than the foregoing requiring a high degree of trust and confidence.

(2) "Illegal drugs," as used in this clause, means controlled substances included in Schedules I and II, as defined by section 802(6) of title 21 of the United States Code, the possession of which is unlawful under chapter 13 of that Title. The term "illegal drugs" does not mean the use of a controlled substance pursuant to a valid prescription or other uses authorized by law.

(b) The Contractor agrees to institute and maintain a program for achieving the objective of a drug-free work force. While this clause defines criteria for such a program, contractors are encouraged to implement alternative approaches comparable to the criteria in paragraph (c) that are designed to achieve the objectives of this clause.

(c) Contractor programs shall include the following, or appropriate alternatives:

(1) Employee assistance programs emphasizing high level direction, education, counseling, rehabilitation, and coordination with available community resources;

(2) Supervisory training to assist in identifying and addressing illegal drug use by Contractor employees;

(3) Provision for self-referrals as well as supervisory referrals to treatment with maximum respect for individual confidentiality consistent with safety and security issues;

(4) Provision for identifying illegal drug users, including testing on a controlled and carefully monitored basis. Employee drug testing programs shall be established taking account of the following:

(i) The Contractor shall establish a program that provides for testing for the use of illegal drugs by employees in sensitive positions. The extent of and criteria for such testing shall be determined by the Contractor based on considerations that include the nature of the work being performed under the contract, the employee's duties, and efficient use of Contractor resources, and the risks to health, safety, or national security that could result from the failure of an employee adequately to discharge his or her position.

(ii) In addition, the Contractor may establish a program for employee drug testing--

(A) When there is a reasonable suspicion that an employee uses illegal drugs; or

(B) When an employees has been involved in an accident or unsafe practice;

(C) As part of or as a follow-up to counseling or rehabilitation for illegal drug use;

(D) As part of a voluntary employee drug testing program.

(iii) The Contractor may establish a program to test applicants for employment for illegal drug use.

(iv) For the purpose of administering this clause, testing for illegal drugs may be limited to those substances for which testing is prescribed by section 2..1 of subpart B of the "Mandatory Guidelines for Federal Workplace Drug Testing Programs" (53 FR 11980 (April 11, 1988), issued by the Department of Health and Human Services.

(d) Contractors shall adopt appropriate personnel procedures to deal with employees who are found to be using drugs illegally. Contractors shall not allow any employee to remain on duty or perform in a sensitive position who is found to use illegal drugs until such times as the Contractor, in accordance with procedures established by the Contractor, determines that the employee may perform in such a position.

(e) The provisions of this clause pertaining to drug testing program shall not apply to the extent that are inconsistent with state or local law, or with an existing collective bargaining agreement; provided that with respect to the latter, the Contractor agrees those issues that are in conflict will be a subject of negotiation at the next collective bargaining session.

(End of clause)

252.225-7031 SECONDARY ARAB BOYCOTT OF ISRAEL (JUN 1992)

(a) Definitions. As used in this clause--

(1) "Foreign person" means any person other than a United States person as defined in Section 16(2) of the Export Administration Act of 1979 (50 U.S.C. App. Sec 2415).

(2) "United States person" is defined in Section 16(2) of the Export Administration Act of 1979 and means any United States resident or national (other than an individual resident outside the United States and employed by other than a United States person), any domestic concern (including any permanent domestic establishment of any foreign concern), and any foreign subsidiary or affiliate (including any permanent foreign establishment) of any domestic concern which is controlled in fact by such domestic concerns, as determined under regulations of the President.

(b) Certification. By submitting this offer, the Offeror, if a foreign person, company or entity, certifies that it--

(1) Does not comply with the Secondary Arab Boycott of Israel; and

(2) Is not taking or knowingly agreeing to take any action, with respect to the Secondary Boycott of Israel by Arab countries, which 50 U.S.C. App. Sec 2407(a) prohibits a United States person from taking.

(End of clause)

252.227-7033 RIGHTS IN SHOP DRAWINGS (APR 1966)

(a) Shop drawings for construction means drawings, submitted to the Government by the Construction Contractor, subcontractor or any lower-tier subcontractor pursuant to a construction contract, showing in detail (i) the proposed fabrication and assembly of structural elements and (ii) the installation (i.e., form, fit, and attachment details) of materials or equipment. The Government may duplicate, use, and disclose in any manner and for any purpose shop drawings delivered under this contract.

(b) This clause, including this paragraph (b), shall be included in all subcontracts hereunder at any tier.

252.231-7000 SUPPLEMENTAL COST PRINCIPLES (DEC 1991)

When the allowability of costs under this contract is determined in accordance with part 31 of the Federal Acquisition Regulation (FAR), allowability shall also be determined in accordance with part 231 of the Defense FAR Supplement, in effect on the date of this contract.

252.236-7000 MODIFICATION PROPOSALS - PRICE BREAKDOWN. (DEC 1991)

(a) The Contractor shall furnish a price breakdown, itemized as required and within the time specified by the Contracting Officer, with any proposal for a contract modification.

(b) The price breakdown --

(1) Must include sufficient detail to permit an analysis of profit, and of all costs for --

(i) Material;

(ii) Labor;

(iii) Equipment;

(iv) Subcontracts; and

(v) Overhead; and

(2) Must cover all work involved in the modification, whether the work was deleted, added, or changed.

(c) The Contractor shall provide similar price breakdowns to support any amounts claimed for subcontracts.

(d) The Contractor's proposal shall include a justification for any time extension proposed.

252.236-7008 CONTRACT PRICES - BIDDING SCHEDULES. (DEC 1991)

(a) The Government's payment for the items listed in the Bidding Schedule shall constitute full compensation to the Contractor for --

(1) Furnishing all plant, labor, equipment, appliances, and materials; and

(2) Performing all operations required to complete the work in conformity with the drawings and specifications.

(b) The Contractor shall include in the prices for the items listed in the Bidding Schedule all costs for work in the specifications, whether or not specifically listed in the Bidding Schedule.

252.243-7001 PRICING OF CONTRACT MODIFICATIONS (DEC 1991)

When costs are a factor in any price adjustment under this contract, the contract cost principles and procedures in FAR part 31 and DFARS part 231, in effect on the date of this contract, apply.

252.247-7023 TRANSPORTATION OF SUPPLIES BY SEA (MAR 2000)

(a) Definitions. As used in this clause --

(1) "Components" means articles, materials, and supplies incorporated directly into end products at any level of manufacture, fabrication, or assembly by the Contractor or any subcontractor.

(2) "Department of Defense" (DoD) means the Army, Navy, Air Force, Marine Corps, and defense agencies.

(3) "Foreign flag vessel" means any vessel that is not a U.S.-flag vessel.

(4) "Ocean transportation" means any transportation aboard a ship, vessel, boat, barge, or ferry through international waters.

(5) "Subcontractor" means a supplier, materialman, distributor, or vendor at any level below the prime contractor whose contractual obligation to perform results from, or is conditioned upon, award of the prime contract and who is performing any part of the work or other requirement of the prime contract.

(6) "Supplies" means all property, except land and interests in land, that is clearly identifiable for eventual use by or owned by the DoD at the time of transportation by sea.

(i) An item is clearly identifiable for eventual use by the DoD if, for example, the contract documentation contains a reference to a DoD contract number or a military destination.

(ii) "Supplies" includes (but is not limited to) public works; buildings and facilities; ships; floating equipment and vessels of every character, type, and description, with parts, subassemblies, accessories, and equipment; machine tools; material; equipment; stores of all kinds; end items; construction materials; and components of the foregoing.

(7) "U.S.-flag vessel" means a vessel of the United States or belonging to the United

States, including any vessel registered or having national status under the laws of the United States.

(b)(1) The Contractor shall use U.S.-flag vessels when transporting any supplies by sea under this contract.

(2) A subcontractor transporting supplies by sea under this contract shall use U.S.-flag vessels if--

(i) This contract is a construction contract; or

(ii) The supplies being transported are--

(A) Noncommercial items; or

(B) Commercial items that--

(1) The Contractor is reselling or distributing to the Government without adding value (generally, the Contractor does not add value to items that it contracts for f.o.b. destination shipment);

(2) Are shipped in direct support of U.S. military contingency operations, exercises, or forces deployed in humanitarian or peacekeeping operations; or

(3) Are commissary or exchange cargoes transported outside of the Defense Transportation System in accordance with 10 U.S.C. 2643.

(c) The Contractor and its subcontractors may request that the Contracting Officer authorize shipment in foreign-flag vessels, or designate available U.S.-flag vessels, if the Contractor or a subcontractor believes that --

(1) U.S.-flag vessels are not available for timely shipment;

(2) The freight charges are inordinately excessive or unreasonable; or

(3) Freight charges are higher than charges to private persons for transportation of like goods.

(d) The Contractor must submit any request for use of other than U.S.-flag vessels in writing to the Contracting Officer at least 45 days prior to the sailing date necessary to meet its delivery schedules. The Contracting Officer will process requests submitted after such date(s) as expeditiously as possible, but the Contracting Officer's failure to grant approvals to meet the shipper's sailing date will not of itself constitute a compensable delay under this or any other clause of this contract. Requests shall contain at a minimum --

(1) Type, weight, and cube of cargo;

(2) Required shipping date;

(3) Special handling and discharge requirements;

(4) Loading and discharge points;

(5) Name of shipper and consignee;

(6) Prime contract number; and

(7) A documented description of efforts made to secure U.S.-flag vessels, including points of contact (with names and telephone numbers) with at least two U.S.-flag carriers contacted. Copies of telephone notes, telegraphic and facsimile message or letters will be sufficient for this purpose.

(e) The Contractor shall, within 30 days after each shipment covered by this clause, provide the Contracting Officer and the Division of National Cargo, Office of Market Development, Maritime Administration, U.S. Department of Transportation, Washington, DC 20590, one copy of the rated on board vessel operating carrier's ocean bill of lading, which shall contain the following information --

(1) Prime contract number;

(2) Name of vessel;

(3) Vessel flag of registry;

(4) Date of loading;

(5) Port of loading;

(6) Port of final discharge;

(7) Description of commodity;

(8) Gross weight in pounds and cubic feet if available;

(9) Total ocean freight in U.S. dollars; and

(10) Name of the steamship company.

(f) The Contractor agrees to provide with its final invoice under this contract a representation that to the best of its knowledge and belief --

(1) No ocean transportation was used in the performance of this contract;

(2) Ocean transportation was used and only U.S.-flag vessels were used for all ocean shipments under the contract;

(3) Ocean transportation was used, and the Contractor had the written consent of the Contracting Officer for all non-U.S.-flag ocean transportation; or

(4) Ocean transportation was used and some or all of the shipments were made on non-U.S.-flag vessels without the written consent of the Contracting Officer. The Contractor shall describe these shipments in the following format:

ITEM DESCRIPTION	CONTRACT LINE ITEMS	QUANTITY

TOTAL_____

(g) If the final invoice does not include the required representation, the Government will reject and return it to the Contractor as an improper invoice for the purposes of the Prompt Payment clause of this contract. In the event there has been unauthorized use of non-U.S.-flag vessels in the performance of this contract, the Contracting Officer is entitled to equitably adjust the contract, based on the unauthorized use.

(h) The Contractor shall include this clause, including this paragraph (h), in all subcontractors under this contract that--

(1) Exceed the simplified acquisition threshold in Part 2 of the Federal Acquisition Regulation; and

(2) Are for a type of supplies described in paragraph (b)(3) of this clause.

(End of clause)

252.247-7024 NOTIFICATION OF TRANSPORTATION OF SUPPLIES BY SEA (MAR 2000)

(a) The Contractor has indicated by the response to the solicitation provision, Representation of Extent of Transportation by Sea, that it did not anticipate transporting by sea any supplies. If, however, after the award of this contract, the Contractor learns that supplies, as defined in the Transportation of Supplies by Sea clause of this contract, will be transported by sea, the Contractor --

(1) Shall notify the Contracting Officer of that fact; and

(2) Hereby agrees to comply with all the terms and conditions of the Transportation of Supplies by Sea clause of this contract.

(b) The Contractor shall include this clause; including this paragraph (b), revised as necessary to reflect the relationship of the contracting parties--

(1) In all subcontracts under this contract, if this contract is a construction contract; or

(2) If this contract is not a construction contract, in all subcontracts under this contract that are for--

(i) Noncommercial items; or

(ii) Commercial items that--

(A) The Contractor is reselling or distributing to the Government without adding value (generally, the Contractor does not add value to items that it subcontracts for f.o.b. destination shipment);

(B) Are shipped in direct support of U.S. military contingency operations, exercises, or forces deployed in humanitarian or peacekeeping operations; or

(C) Are commissary or exchange cargoes transported outside of the Defense Transportation System in accordance with 10 U.S.C. 2643.

(End of clause)

END OF SECTION 00700

LOWER BUFFALO CREEK
CHANNEL CLEANOUT
MISSISSIPPI COUNTY, ARKANSAS

SECTION 00800

SPECIAL CONTRACT REQUIREMENTS

TABLE OF CONTENTS

Para No.	Paragraph Title	Page No.
1.1	Commencement, Prosecution, and Completion of Work	00800-1
1.2	Not Used	00800-1
1.3	Liquidated Damages-Construction	00800-1
1.4	Exception to Liquidated Damages	00800-1
1.5	Contract Drawings and Specifications	00800-1
1.6	Physical Data	00800-2
1.7	Rights-of-way	00800-3
1.8	Layout of Work	00800-4
1.9 thru 1.10	Not Used	00800-4
1.11	Progress Chart	00800-4
1.12	Safety-Related Special Requirements	00800-4
1.13	Basis for Settlement of Proposals	00800-7
1.14	Certificates of Compliance	00800-8
1.15	Contractor's Certificate	00800-8
1.16	Not Used	00800-8
1.17	As-Built Drawings	00800-8
1.18	Damage to Work	00800-8
1.19	Notification of Area Engineer Before Beginning Work	00800-9
1.20	Equipment Ownership and Operating Expense Schedule	00800-9
1.21	Not Used	00800-10
1.22	Vehicle Weight Limitations	00800-10
1.23	Obstructions	00800-10
1.24	National Pollutant Discharge Elimination System	00800-10
1.25	Performance of Work by the Contractor	00800-11
1.26	Continuing Contracts	00800-11

Para No.	Paragraph Title	Page No.
1.27	Acceptance Sections	00800-12
1.28	Time Extensions for Unusually Severe Weather	00800-13
1.29	Payment for Mobilization and Demobilization	00800-13
1.30	Not Used	00800-14
1.31	Field Office Building	00800-14
1.32	Submittals	00800-15
1.33	Not Used	00800-15
1.34	Temporary Project Fencing	00800-15
1.35 thru 1.37	Not Used	00800-15
1.38	Sunday, Holiday and Night Work	00800-15
1.39 thru 1.40	Not Used	00800-15
1.41	Storage of Equipment and Materials	00800-15
1.42	Warranty of Construction	00800-16
1.43	Utility Services	00800-17
1.44 thru 1.58	Not Used	00800-17
1.59	Designated Billing Office	00800-17
1.60	Year 2000 Compliance	00800-17

LOWER BUFFALO CREEK
CHANNEL CLEANOUT
MISSISSIPPI COUNTY, ARKANSAS

SECTION 00800 - SPECIAL CONTRACT REQUIREMENTS

1.1. COMMENCEMENT, PROSECUTION, AND COMPLETION OF WORK (APR 1984). The Contractor shall be required to (a) commence work under this contract within 10 calendar days after the date the Contractor receives the notice to proceed, (b) prosecute the work diligently, and (c) complete the entire work ready for use not later than 90 calendar days after the date of receipt by him of notice to proceed. The time stated for completion shall include final cleanup of the premises. (FAR 52.211-10)

1.2. NOT USED.

.

1.3. LIQUIDATED DAMAGES-CONSTRUCTION (SEP 2000).

a. If the Contractor fails to complete the work within the time specified in the contract, the Contractor shall pay liquidated damages to the Government in the amount of, **$335.00** for each calendar day of delay until the work is completed or accepted.

b. If the Government terminates the Contractor's right to proceed, liquidated damages will continue to accrue until the work is completed. These liquidated damages are in addition to excess costs of repurchase under the Termination clause.

1.4. EXCEPTION TO LIQUIDATED DAMAGES. The Contractor's obligation specified in the requirements of Section 02935 Establishment of Turf are exempt from liquidated damages.

1.5 CONTRACT DRAWINGS AND SPECIFICATIONS (AUG 2000).

a. The Government will provide to the Contractor, without charge, one set of contract drawings and specifications, except publications incorporated into the technical provisions by reference, in electronic or paper media as chosen by the Contracting Officer.

b. The Contractor shall--

(1) Check all drawings furnished immediately upon receipt;

(2) Compare all drawings and verify the figures before laying out the work;

(3) Promptly notify the Contracting Officer of any discrepancies;

(4) Be responsible for any errors that might have been avoided by complying with this paragraph b; and

(5) Reproduce and print contract drawings and specifications as needed.

c. In general--

(1) Large-scale drawings shall govern small-scale drawings; and

(2) The Contractor shall follow figures marked on drawings in preference to scale measurements.

d. Omissions from the drawings or specifications or the misdescription of details of work that are manifestly necessary to carry out the intent of the drawings and specifications, or that are customarily performed, shall not relieve the Contractor from performing such omitted or misdescribed details of the work. The Contractor shall perform such details as if fully and correctly set forth and described in the drawings and specifications.

e. The work shall conform to the specifications and the contract drawings identified on the following index of drawings:

LOWER BUFFALO CREEK
CHANNEL CLEANOUT
MISSISSIPPI COUNTY, ARKANSAS

FILE NUMBER 001A0666 - 003A0666

TITLE	DRAWING NUMBER
MAPS AND INDEX	1
PLAN VIEW, PROFILE AND SECTIONS	2
PLAN VIEW, PROFILE AND SECTIONS	3
TEMPORARY EROSION CONTROL DEVICES	STD

(DFARS 252.236-7001)

1.6. PHYSICAL DATA (APR 1984). Data and information furnished or referred to below are for the Contractor's information. The Government shall not be responsible for any interpretation of or conclusion drawn from the data or information by the Contractor.

a. Physical Conditions. The indications of physical conditions on the drawings and in the specifications are the result of site investigations by aerial photographs and topographic surveys.

b. Weather Conditions. Information with respect to temperatures and precipitation may be obtained from the National Weather Service. Also see paragraph 1.28, "Time Extensions for Unusually Severe Weather".

c. Additional Data. Additional data consisting of cross sections, river stage records, and records of borings may be available for inspection at the U.S. Army Engineer District, Memphis, Tennessee. (FAR 52.236-4)

1.7 RIGHTS-OF-WAY.

a. The rights-of-way and easements for the work to be constructed under this contract within the limits indicated on the drawings will be provided by the Government without cost to the Contractor. However, the Contractor shall make his own arrangements with the appropriate owners or organizations for transporting his equipment across, over or under railroad tracks, highways, bridges, private property, and utility lines and shall provide at his own expense any additional right-of-way or easements required to effect such crossings, including insurance requirements of owners. Limits of right-of-way which will be provided by the Government are as indicated on the drawings.

b. The Contractor shall, upon reasonable notice, without expense to the Government and at any time during the progress of the work when not being actively used for contract operations, promptly vacate and clean up any part of the Government grounds that have been allotted to or have been in use by him when directed to do so by the Contracting Officer.

c. The Contractor shall not obstruct any existing roads on the lands controlled by the United States except with the permission of the Contracting Officer, and shall maintain such roads in as good condition as exists at the time of commencement of the work.

d. Any additional right-of-way required for access or for the Contractor's method of operation must be obtained by and at the expense of the Contractor. The Contractor shall submit written evidence to the Contracting Officer that he has obtained the rights-of-way from the property owners. The written evidence shall consist of an authenticated copy of the conveyance under which the Contractor acquired the rights-of-way, prepared and executed in accordance with the laws of the State of Arkansas. If temporary rights are obtained by the Contractor, the period of time shall coincide with paragraph 1.1, "Commencement, Prosecution, and Completion of Work", of the SPECIAL CONTRACT REQUIREMENTS, plus a reasonable time for any extension granted for completion of the work. The Contractor shall be solely responsible for any and all damages, claims for damages, and liability of any nature whatsoever arising from or growing out of the use of rights-of-way other than those rights-of-way furnished by the Government.

e. The Contractor shall repair, at his own expense, any and all damage to the existing roads when such damage is a result of his operations on this contract. The Contractor shall also replace, at his own expense, any and all surfacing displaced or damaged by his operations on this contract. The repairs and/or replacement shall be done to the satisfaction of the Contracting Officer.

1.8. LAYOUT OF WORK.

a. The Contractor will establish the following baselines and bench marks at the site of the work:

(1) Baselines as shown on the drawings.

(2) Bench marks as shown on the drawings.

b. From the baselines and bench marks established by the Contractor, the Contractor shall complete the layout of the work and shall be responsible for all measurements that may be required for the execution of the work to the location and limit marks prescribed in the specifications or on the contract drawings, subject to such modifications as the Contracting Officer may require to meet changed conditions or as a result of necessary modifications to the contract work.

c. The Contractor shall furnish, at his own expense, such stakes, templates, platforms, equipment, tools and materials, and all labor as may be required in laying out any part of the work from the baselines and bench marks established by the Contractor. It shall be the responsibility of the Contractor to maintain and preserve all stakes and marks established by the Contracting Officer until authorized to remove them, and if such marks are destroyed, by the Contractor or through his negligence, prior to their authorized removal, they may be replaced by the Contracting Officer, at his discretion, and the expense of replacement will be deducted from any amounts due or to become due the Contractor. The Contracting Officer may require that work be suspended at any time when location and limit marks established by the Contractor are not reasonably adequate to permit checking of the work.

1.9. THRU 1.10. NOT USED.

1.11. PROGRESS CHART. The schedule of work will be in accordance with the progress chart. The progress chart required by provisions of paragraph (a) of the CONTRACT CLAUSE entitled "Schedules for Construction Contracts" shall be prepared on ENG Form 2454, copies of which will be furnished to the Contractor by the Government. THREE COPIES OF THE SCHEDULE WILL BE REQUIRED.

1.12. SAFETY-RELATED SPECIAL REQUIREMENTS. ALL WORK UNDER THIS CONTRACT SHALL COMPLY WITH THE LATEST VERSION OF U.S. ARMY CORPS OF ENGINEERS SAFETY AND HEALTH REQUIREMENTS MANUAL, EM 385-1-1, AND OCCUPATIONAL SAFETY AND HEALTH ACT (OSHA) STANDARDS IN EFFECT ON THE DATE OF THE SOLICITATION. NO SEPARATE PAYMENT WILL BE MADE FOR COMPLIANCE WITH EM 385-1-1, NOR FOR COMPLIANCE WITH ANY OF THE OTHER SAFETY-RELATED SPECIAL REQUIREMENTS.

a. Accident Investigations and Reporting. Refer to EM 385-1-1, Section 1. Accidents

shall be investigated and reports completed by the immediate supervisor of the employee(s) involved and reported to the Contracting Officer or his representative within one working day after the accident occurs. Copies of ENG FORM 3394 will be furnished the Contractor upon request by the Area Office.

b. Accident Prevention Program. Refer to the CONTRACT CLAUSE entitled, "Accident Prevention (Alternate I)". Within 21 calendar days after receipt of Notice of Award of the contract, four copies of the Accident Prevention Program shall be submitted to the Contracting Officer for review and approval. The program shall be prepared in the following format:

(1) An executed LMV Form 358R, Administrative Plan (available upon request).

(2) An executed LMV Form 359R, Activity Hazard Analysis (available upon request).

(3) A copy of company policy statement regarding accident prevention.

(4) When marine plant and equipment are in use under a contract, the method of fuel oil transfer shall be submitted on LMV Form 414R, Fuel Oil Transfer, (available upon request). (Refer to 33 CFR 156.)

The Contractor shall not commence physical work at the site until the program has been approved by the Contracting Officer, or his authorized representative. At the Contracting Officer's discretion, the Contractor may submit his Activity Hazard Analysis for only the first phase of construction provided that it is accompanied by an outline of the remaining phases of construction. All remaining phases shall be submitted and accepted prior to the beginning of work in each phase. Also refer to Section 1 of EM 385-1-1.

c. Daily Inspections. The Contractor shall perform daily safety inspections and record them on the forms approved by the Contracting Officer. Reports of daily inspections shall be maintained at the jobsite. The reports shall be records of the daily inspections and resulting actions. Each report will include, as a minimum, the following:

(1) Phase(s) of construction underway during the inspection.

(2) Locations or areas inspections were made.

(3) Results of inspection, including nature of deficiencies observed and corrective actions taken, or to be taken, date, and signature of the person responsible for its contents.

d. Machinery and Mechanized Equipment. Machinery and mechanized equipment used under this contract shall comply with the following:

(1) When mechanized equipment is operated on floating plant, the Contractor shall provide positive and acceptable means of preventing this equipment from moving or falling into the water. The type of equipment addressed by this clause includes front-end loaders, bulldozers, trucks (both on- and off-road), backhoes, track hoes, and similar equipment. If the Contractor plans to use such equipment on floating plant, an activity hazard analysis must be developed for this feature of work. The plan must include a detailed explanation of the type or types of physical barriers, curbs, structures, etc., which will be incorporated to protect the operator and prevent the equipment from entering the water. Nonstructural warning devices may be considered for situations where the use of structural barriers is determined to be impracticable. The activity hazard analysis must thoroughly address the procedure and be submitted to the Corps for review and acceptance prior to start of this feature of work.

(2) The stability of crawler, truck, and wheel-mounted cranes shall be assured.

(a) The manufacturer's load-rating chart may be used to determine the maximum allowable working load for each particular crane's boom angle provided a test load, with a boom angle of 20 degrees, confirms the manufacturer's load-rating table.

(b) Stability tests are required if:

(i) There is no manufacturer's load-rating chart securely fixed to the operator's cab;

(ii) There has been a change in the boom or other structural members; or

(iii) There has been a change in the counterweight.

The test shall consist of lifting a load with the boom in the least stable undercarriage position and at an angle of 20 degrees above the horizontal. The test shall be conducted under close supervision on a firm, level surface. The load that tilts the machine shall be identified as the test load. The test load moment (in ft-lbs) shall then be calculated by multiplying the horizontal distance (in ft) from the center of rotation of the machine to the test load, times the test load (in lbs). Three-fourths of this test-load moment shall then be used to compute the maximum allowable operating loads for the boom at 20, 40, 60, and 80 degrees above horizontal. From these maximum allowable operating loads, a curve shall be plotted and posted in the cab of the machine in sight of the operator. These values shall not be exceeded except in the performance test described below. The test load shall never exceed 110 percent of the manufacturer's maximum rated capacity.

(c) In lieu of the test and computations above, the crane may be load tested for stability at each of the four boom positions listed above.

(3) Performance tests shall be performed in accordance with Section 16 of EM 385-1-1. Performance tests shall be conducted after each stability test, when the crane is placed in

service on a project, and at least every 12 months.

(4) Inspections shall be made which will ensure a safe and economical operation of both cranes and draglines. Specific inspections and their frequencies are listed on the appropriate checklists noted below. Results of inspections and tests for cranes shall be recorded on the Safety Inspection Check List, LMV Form 326R (available upon request), and inspection results for draglines shall be recorded on LMV Form 373R (available upon request). Copies of the inspections and tests shall be available at the jobsite for review. All stability and performance tests on cranes and all complete dragline inspections shall be witnessed by the Contracting Officer or his authorized representative.

(5) A complete dragline inspection shall be made:

(a) At least annually;

(b) Prior to the dragline being placed in operation; and

(c) After the dragline has been out of service for more than six months.

e. Safety Sign. The Contractor shall furnish, erect, and maintain a safety sign at the site, as located by the Contracting Officer. The sign shall conform to the requirements of this paragraph and the drawing entitled "Safety Sign", included at the end of these Special Contract Requirements. The lettering shall be black and the background white. When placed on floating plant, the sign may be half size. Upon request, the Government will furnish a decal of the Engineer Castle. The sign shall be erected as soon as practicable, but not later than 15 calendar days after the date established for commencement of work. The data required shall be current.

1.13. BASIS FOR SETTLEMENT OF PROPOSALS (JAN 1997). Actual costs will be used to determine equipment costs for a settlement proposal submitted on the total cost basis under FAR 49.206-2(b). In evaluating a terminations settlement proposal using the total cost basis, the following principles will be applied to determine allowable equipment costs:

(1) Actual costs for each piece of equipment, or groups of similar serial or series equipment, need not be available in the Contractor's accounting records to determine total actual equipment costs.

(2) If equipment costs have been allocated to a contract using predetermined rates, those charges will be adjusted to actual costs.

(3) Recorded job costs adjusted for unallowable expenses will be used to determine equipment operating expenses.

(4) Ownership costs (depreciation) will be determined using the Contractor's

depreciation schedule (subject to the provisions of FAR 31.205-11).

(5) License, taxes, storage and insurance costs are normally recovered as an indirect expense and unless the Contractor charges these costs directly to contracts, they will be recovered through the indirect expense rate. (EFARS 52.249-5000)

1.14. CERTIFICATES OF COMPLIANCE. Any certificates required for demonstrating proof of compliance of material with specification requirements shall be executed in four (4) copies. Each certificate shall be signed by an official authorized to certify on behalf of the manufacturing company and shall contain the name and address of the Contractor, the project name and location, and the quantity and date or dates of shipment or delivery to which the certificates apply. Copies of laboratory test reports submitted with certificates shall contain the name and address of the testing laboratory and the date or dates of the test to which the report applies. Certification shall not be construed as relieving the Contractor from furnishing satisfactory material, if, after tests are performed on selected samples, the material is found not to meet the specific requirements.

1.15. CONTRACTOR'S CERTIFICATE. Each submittal of shop drawings and materials data shall be accompanied by a certificate, signed by the head of the Quality Control Organization of the prime Contractor, that the prime Contractor has reviewed in detail all shop drawings and materials contained in the submittal and that they are correct and in strict conformance with the contract drawings and specifications except as may be otherwise explicitly stated. The Government will first check for the Contractor's certificate and then review and render approval action or indicate disapproval in those cases where contract requirements are not fulfilled.

1.16. NOT USED.

1.17. AS-BUILT DRAWINGS. The Contractor shall maintain two (2) full-size sets of the Contract drawings depicting a current record of the work as actually constructed. One set is for the Contractor's use and one for the Government's use. These working as-built drawing red-line mark-ups may be manually or electronically generated using the construction plans. These working as-built drawings shall be reviewed at least monthly with the Contracting Officer, prior to the Contractor submitting a request for progress payment. Both shall certify that the as-built drawings are accurate and up-to-date before progress payment is made. Upon completion of the work and not later than 60 days from acceptance, the Contractor shall deliver a complete final set of the as-built red-line marked-up plans depicting the construction as actually accomplished. The final as-built drawings shall be identified as such by marking or stamping them with the words "AS-BUILT DRAWINGS" in letters at least 3/16" high. Those drawings where no change is involved shall be marked or stamped "AS-BUILT, NO CHANGE". Compliance and delivery of the final as-built drawings will be enforced through the approval of final payment. Also, the quality of the final as-built drawings will be reflected in the Contractor's performance evaluation.

1.18. DAMAGE TO WORK. The responsibility for damage to any part of the permanent work shall be as set forth in the CONTRACT CLAUSE entitled "Permits and Responsibilities".

However, if, in the judgement of the Contracting Officer, any part of the permanent work performed by the Contractor is damaged by flood, tornado, or earthquake, which damage is not due to the failure of the Contractor to take reasonable precautions or to exercise sound engineering and construction practices in the conduct of the work, the Contractor shall make the repairs as ordered by the Contracting Officer and full compensation for such repairs will be made at the applicable contract unit or lump sum prices as fixed and established in the contract. If, in the opinion of the Contracting Officer, there are no contract unit or lump sum prices applicable to any part of such work, an equitable adjustment pursuant to the CONTRACT CLAUSE entitled "Changes" will be made as full compensation for the repairs of that part of the permanent work for which there are no applicable contract unit or lump sum prices. Except as herein provided, damage to all work (including temporary construction), utilities, materials, equipment and plant shall be repaired to the satisfaction of the Contracting Officer at the Contractor's expense regardless of the cause of such damage.

1.19. NOTIFICATION OF AREA ENGINEER BEFORE BEGINNING WORK. At least 7 days before beginning work, the Contractor shall notify Mr. Donald R. Tutor, Area Engineer, Wynne Area Office, 1932 N. Falls Boulevard, P.O. Box 729, Wynne, Arkansas 72396-0729, Telephone No. 901-544-3856 or 870-238-7983. COLLECT CALLS WILL NOT BE ACCEPTED.

1.20. EQUIPMENT OWNERSHIP AND OPERATING EXPENSE SCHEDULE (MAR 1995).

a. This clause does not apply to terminations. See SPECIAL CONTRACT REQUIREMENT entitled, "Basis for Settlement of Proposals" and FAR Part 49.

b. Allowable cost for construction and marine plant and equipment in sound workable condition owned or controlled and furnished by a Contractor or subcontractor at any tier shall be based on actual cost data for each piece of equipment or groups of similar serial and series for which the Government can determine both ownership and operating costs from the Contractor's accounting records. When both ownership and operating costs cannot be determined for any piece of equipment or groups of similar serial or series equipment from the Contractor's accounting records, costs for that equipment shall be based upon the applicable provisions of EP 1110-1-8, Construction Equipment Ownership and Operating Expense Schedule, Region III. Working conditions shall be considered to be average for determining equipment rates using the schedule unless specified otherwise by the Contracting Officer. For equipment not included in the schedule, rates for comparable pieces of equipment may be used or a rate may be developed using the formula provided in the schedule. For forward pricing, the schedule in effect at the time of negotiations shall apply. For retroactive pricing, the schedule in effect at the time the work was performed shall apply.

c. Equipment rental costs are allowable, subject to the provisions of FAR 31.105(d)(2)(ii) and FAR 31.205-36. Rates for equipment rented from an organization under common control, lease-purchase arrangements, and sale-leaseback arrangements, will be determined using the schedule, except that actual rates will be used for equipment leased from an

organization under common control that has an established practice of leasing the same or similar equipment to unaffiliated lessees.

d. When actual equipment costs are proposed and the total amount of the pricing action exceeds the small purchase threshold, the Contracting Officer shall request the Contractor to submit either certified cost or pricing data, or partial/limited data, as appropriate. (EFARS 52.231-5000)

NOTE: THE CONTRACTOR MAY PURCHASE THE EQUIPMENT MANUAL FROM THE GOVERNMENT PRINTING OFFICE. THE GOVERNMENT PRINTING OFFICE TELEPHONE NO. IS 202-512-1800 and THE INTERNET ADDRESS IS http://www.pls.com:8001/his/cfr.html.

1.21. NOT USED.

1.22. VEHICLE WEIGHT LIMITATIONS. Vehicle weight limitations for operation on roads, streets, and bridges may affect the prosecution of work under this contract. The Contractor will be responsible for obtaining all necessary licenses and permits in accordance with the CONTRACT CLAUSE entitled "Permits and Responsibilities".

1.23. OBSTRUCTIONS.

a. Utilities. All utilities located at the site are to remain in place and operative during the construction. The exact location, depth, and height of utilities shown on drawings shall be verified in the field by the Contractor. At least 10 days before beginning work in the vicinity of a utility, the Contractor shall call the appropriate “Call Before You Dig” number listed below. The Contractor shall exercise special care when working in the vicinity of utilities to prevent damage thereto or injury to the Contractor's employees or others. Any damage to the utilities or interruptions of service occasioned by the Contractor’s operations shall be repaired and the service restored promptly at his expense.

In the event the Contractor elects to have utilities relocated for his own convenience, he shall make his own arrangement with utility owners for the rerouting and replacement to their permanent location after completion of the work adjacent thereto. All costs associated with utility relocation for the Contractor’s convenience shall be at his expense.

CALL BEFORE YOU DIG NUMBERS

Arkansas 1-800-482-8998

.

1.24. NATIONAL POLLUTANT DISCHARGE ELIMINATION SYSTEM (NPDES). In compliance with the General Permit of the NPDES, the Contracting Officer will file a Notice of Intent (NOI) with the State of Arkansas. In addition, the Stormwater Pollution Prevention Plan

(SWPPP) required by the General Permit has been prepared and is included at the end of these Special Contract Requirements. The Contractor shall adhere strictly to the erosion control provisions of SWPPP and Section 01130 - ENVIRONMENTAL PROTECTION to minimize sediment discharge into nearby water courses to the maximum extent practicable. Furthermore, the Contractor and all subcontractors shall sign the certification contained in the SWPPP. The Contractor shall maintain the SWPPP on the construction site at all times. The SWPPP shall take precedence over the technical specifications.

1.25. PERFORMANCE OF WORK BY THE CONTRACTOR (APR 1984). The Contractor shall perform on the site, and with its own organization, work equivalent to at least fifteen (15) percent of the total amount of work to be performed under the contract. This percentage may be reduced by a supplemental agreement to this contract if, during performing the work, the Contractor requests a reduction and the Contracting Officer determines that the reduction would be to the advantage of the Government. (FAR 52.236-1)

1.26. CONTINUING CONTRACTS (MAR 1995).

a. This is a continuing contract, as authorized by Section 10 of the River and Harbor Act of September 22, 1922 (33 U.S. Code 621). The payment of some portion of the contract price is dependent upon reservations of funds from future appropriations, and from future contribution to the project having one or more non-federal project sponsors. The responsibilities of the Government are limited by this clause notwithstanding any contrary provision of the "Payments Under Fixed-Price Construction Contracts" clause or any other clause of this contract.

b. The sum of **$1,000.00** has been reserved for this contract and is available for payments to the Contractor during the current fiscal year. It is expected that Congress will make appropriations for future fiscal years from which additional funds together with funds provided by one or more non-federal project sponsors will be reserved for this contract.

c. Failure to make payments in excess of the amount currently reserved, or that may be reserved from time to time, shall not entitle the Contractor to a price adjustment under the terms of this contract except as specifically provided in paragraphs "f" and "i" below. No such failure shall constitute a breach of this contract, except that this provision shall not bar a breach-of-contract action if an amount finally determined to be due as a termination allowance remains unpaid for one year due solely to a failure to reserve sufficient additional funds therefor.

d. The Government may at any time reserve additional funds for payments under the contract if there are funds available for such purpose. The Contracting Officer will promptly notify the Contractor of any additional funds reserved for the contract by issuing an administrative modification to the contract.

e. If earnings will be such that funds reserved for the contract will be exhausted before the end of any fiscal year, the Contractor shall give written notice to the Contracting Officer

of the estimated date of exhaustion and the amount of additional funds which will be needed to meet payments due or to become due under the contract during that fiscal year. This notice shall be given not less than 45 nor more than 60 days prior to the estimated date of exhaustion.

f. No payments will be made after exhaustion of funds except to the extent that additional funds are reserved for the contract. The Contractor shall be entitled to simple interest on any payment that the Contracting Officer determines was actually earned under the terms of the contract and would have been made except for exhaustion of funds. Interest shall be computed from the time such payment would otherwise have been made until actually or constructively made, and shall be at the rate established by the Secretary of the Treasury pursuant to Public Law 92-41, 85 STAT 97, as in effect on the first day of the delay in such payment.

g. Any suspension, delay, or interruption of work arising from exhaustion or anticipated exhaustion of funds shall not constitute a breach of this contract and shall not entitle the Contractor to any price adjustment under the "Suspension of Work" clause or in any other manner under this contract.

h. An equitable adjustment in performance time shall be made for any increase in the time required for performance of any part of the work arising from exhaustion of funds or the reasonable anticipation of exhaustion of funds.

i. If, upon the expiration of sixty (60) days after the beginning of the fiscal year following an exhaustion of funds, the Government has failed to reserve sufficient additional funds to cover payments otherwise due, the Contractor, by written notice delivered to the Contracting Officer at any time before such additional funds are reserved, may elect to treat his right to proceed with the work as having been terminated. Such a termination shall be considered a termination for the convenience of the Government.

j. If at any time it becomes apparent that the funds reserved for any fiscal year are in excess of the funds required to meet all payments due or to become due the Contractor because of work performed and to be performed under the contract during the fiscal year, the Government reserves the right, after notice to the Contractor, to reduce said reservation by the amount of such excess. (EFARS 52.232-5001)

1.27. <u>ACCEPTANCE SECTIONS</u>. Items of work under this contract shall be accepted as follows:

a. Sections of channel excavation 1,000 feet long;

b. Acceptance of channel excavation for each 1,000 foot section shall also include acceptance of all clearing within that section.

c. Acceptance of channel excavation for each 1,000 foot section will not include

acceptance of turfing or other related work.

1.28. TIME EXTENSIONS FOR UNUSUALLY SEVERE WEATHER (31 OCT 1989).

a. This provision specifies the procedure for determination of time extensions for unusually severe weather in accordance with the CONTRACT CLAUSE entitled "Default (Fixed-Price Construction)". In order for the Contracting Officer to award a time extension under this clause, the following conditions must be satisfied:

(1) The weather experienced at the project site during the contract period must be found to be unusually severe, that is, more severe than the adverse weather anticipated for the project location during any given month.

(2) The unusually severe weather must actually cause a delay to the completion of the project. The delay must be beyond the control and without the fault or negligence of the Contractor.

b. The following schedule of monthly anticipated adverse weather delays is based on National Oceanic and Atmospheric Administration (NOAA) or similar data for the project location and will constitute the base line for monthly weather time evaluations. The Contractor's progress schedule must reflect these anticipated adverse weather delays in all weather dependent activities.

MONTHLY ANTICIPATED ADVERSE WEATHER DELAY
WORK DAYS BASED ON (6) DAY WORK WEEK

JAN	FEB	MAR	APR	MAY	JUN	JUL	AUG	SEP	OCT	NOV	DEC
(11)	(7)	(4)	(4)	(3)	(3)	(3)	(2)	(3)	(3)	(4)	(8)

c. Upon acknowledgment of the Notice to Proceed (NTP) and continuing throughout the contract, the Contractor will record on the daily CQC report, the occurrence of adverse weather and resultant impact to normally scheduled work. Actual adverse weather delay days must prevent work on critical activities for 50 percent or more of the Contractor's scheduled work day. The number of actual adverse weather delay days shall include days impacted by actual adverse weather (even if adverse weather occurred in previous month), be calculated chronologically from the first to the last day of each month, and be recorded as full days. If the number of actual adverse weather delay days exceeds the number of days anticipated in paragraph b, above, the Contracting Officer will convert any qualifying delays to calendar days, giving full consideration for equivalent fair weather work days, and issue a modification in accordance with the CONTRACT CLAUSE entitled "Default (Fixed-Price Construction)". (ER 415-1-15, Appendix A)

1.29. PAYMENT FOR MOBILIZATION AND DEMOBILIZATION (DEC 1991).

a. The Government will pay all costs for the mobilization and demobilization of all of the Contractor's plant and equipment at the contract lump sum price for this item.

(1) Sixty (60) percent of the lump sum price upon completion of the Contractor's mobilization at the work site.

(2) The remaining forty (40) percent upon completion of demobilization.

b. The Contracting Officer may require the Contractor to furnish cost data to justify this portion of the bid if the Contracting Officer believes that the percentages in paragraphs a(1) and (2) of this clause do not bear a reasonable relation to the cost of the work in this contract.

(1) Failure to justify such price to the satisfaction of the Contracting Officer will result in payment, as determined by the Contracting Officer, of--

(i) Actual mobilization costs at completion of mobilization;

(ii) Actual demobilization costs at completion of demobilization; and

(iii) The remainder of this item in the final payment under this contract.

(2) The Contracting Officer's determination of the actual costs in paragraph b(1) of this clause is not subject to appeal. (DFARS 252.236-7004)

1.30. NOT USED.

1.31. FIELD OFFICE BUILDING.

a. The Contractor shall furnish and maintain a temporary building for the exclusive use of the Government inspectors during the life of the contract. The building shall conform to the following requirements:

Floor Space	Not less than 150 sq. ft.
Height of Ceiling	Not less than 7 feet
Windows	Not less than 4
Doors	At least 1
Type of Floor	Wood or Concrete

The building shall be of light but weatherproof construction. Windows shall be arranged to open and to be fastened from the inside. All door and window openings shall be provided with suitable screens. The door shall be equipped with a durable hasp and padlock. Interior surfaces of exterior walls and ceilings shall be covered with insulating board and an inside storage room of adequate size shall be provided. The Contractor shall furnish an adequate supply of approved drinking water,

sufficient electrical outlets for office calculators and equipment, adequate toilet facilities, all electricity required and sufficient fixtures for adequate lighting, and during cold weather shall furnish adequate heat. The field office, its location and all facilities shall be subject to the approval of the Contracting Officer. The building shall also be equipped with air conditioning during hot weather. The office shall be equipped with at least 2 chairs and one desk.

b. No separate payment will be made for furnishing and maintaining the field office. Such building will remain the property of the Contractor and shall be removed upon completion of the work as provided in the CONTRACT CLAUSE entitled "Operations and Storage Areas".

1.32. SUBMITTALS. Within 15 calendar days after receipt of notice to proceed, the Contractor shall complete and submit to the Contracting Officer, in duplicate, submittal register ENG Form 4288-R listing all submittals and dates. In addition to those items listed on ENG Form 4288-R, the Contractor shall furnish submittals for any deviation from the plans or specifications. The scheduled need dates must be recorded on the document for each item for control purposes. In preparing the document, adequate time (minimum of 30 days) will be allowed for review and approval and possible resubmittal. Scheduling shall be coordinated with the approved progress schedule. The Contractor's Quality Control representative shall review the listing at least every 30 days and take appropriate action to maintain an effective system. Two (2) copies of updated or corrected listing shall be submitted to the Contracting Officer at least every 60 days. Payment will not be made for any material or equipment which does not comply with contract requirements. An original and four (4) copies of all submittals shall be furnished the Contracting Officer. A completed submittal form, ENG Form 4025-R, shall accompany all submittals. Copies of ENG Form 4025-R and ENG Form 4288-R will be furnished the Contractor upon request. Copies of ENG Form 4025-R and ENG Form 4288-R are included at the end of these Special Contract Requirements. (ER 415-1-10, Appendices A and B)

1.33. NOT USED.

1.34. TEMPORARY PROJECT FENCING. Temporary project fencing as required by Paragraph 04.A.04 of EM 385-1-1 is not required on this project.

1.35. THRU 1.37. NOT USED.

1.38. SUNDAY, HOLIDAY AND NIGHT WORK. Sunday and Holiday work will be at the option of the Contractor, but night work will not be permitted unless otherwise authorized by the Contracting Officer.

1.39. THRU 1.40. NOT USED.

1.41. STORAGE OF EQUIPMENT AND MATERIALS. Storage of the Contractor's equipment and materials shall be at those areas within the rights-of-way designated by the Contracting Officer.

1.42. WARRANTY OF CONSTRUCTION (MAR 1994).

a. In addition to any other warranties in this contract, the Contractor warrants, except as provided in paragraph i. of this clause, that work performed under this contract conforms to the contract requirements and is free of any defect in equipment, material, or design furnished, or workmanship performed by the Contractor or any subcontractor or supplier at any tier.

b. This warranty shall continue for a period of 1 year from the date of final acceptance of the work. If the Government takes possession of any part of the work before final acceptance, this warranty shall continue for a period of 1 year from the date the Government takes possession.

c. The Contractor shall remedy at the Contractor's expense any failure to conform, or any defect. In addition, the Contractor shall remedy at the Contractor's expense any damage to Government-owned or controlled real or personal property, when that damage is the result of--

(1) The Contractor's failure to conform to contract requirements; or

(2) Any defect of equipment, material, workmanship, or design furnished.

d. The Contractor shall restore any work damaged in fulfilling the terms and conditions of this clause. The Contractor's warranty with respect to work repaired or replaced will run for 1 year from the date of repair or replacement.

e. The Contracting Officer shall notify the Contractor, in writing, within a reasonable time after the discovery of any failure, defect, or damage.

f. If the Contractor fails to remedy any failure, defect, or damage within a reasonable time after receipt of notice, the Government shall have the right to replace, repair, or otherwise remedy the failure, defect, or damage at the Contractor's expense.

g. With respect to all warranties, expressed or implied, from subcontractors, manufacturers, or suppliers for work performed and materials furnished under this contract, the Contractor shall--

(1) Obtain all warranties that would be given in normal commercial practice;

(2) Require all warranties to be executed, in writing, for the benefit of the Government, if directed by the Contracting Officer; and

(3) Enforce all warranties for the benefit of the Government, if directed by the Contracting Officer.

h. In the event the Contractor's warranty under paragraph (b) of this clause has expired, the Government may bring suit at its expense to enforce a subcontractor's, manufacturer's, or supplier's warranty.

i. Unless a defect is caused by the negligence of the Contractor or subcontractor or supplier at any tier, the Contractor shall not be liable for the repair of any defects of material or design furnished by the Government nor for the repair of any damage that results from any defect in Government-furnished material or design.

j. This warranty shall not limit the Government's rights under the Inspection and Acceptance clause of this contract with respect to latent defects, gross mistakes, or fraud. (FAR 52.246-21)

1.43. UTILITY SERVICES.

a. The Contractor shall provide at the site for all work under this contract, the necessary utility services needed for completion of work under this contract.

b. Electricity. All electric current required by the Contractor shall be furnished at his own expense. All temporary connections for electricity shall be subject to the approval of the Contracting Officer. All temporary lines shall be furnished, installed, connected and maintained by the Contractor in a workman-like manner satisfactory to the Contracting Officer, and shall be removed by the Contractor in like manner at his expense prior to completion of the construction.

1.44. THRU 1.58 NOT USED.

1.59. DESIGNATED BILLING OFFICE. The designated billing office for this contract shall be Wynne Area Office, 1932 N. Falls Boulevard, P.O. Box 729, Wynne, Arkansas 72396-0729.

1.60 YEAR 2000 COMPLIANCE. In accordance with FAR 39.106, the Contractor shall ensure that with respect to any design, construction, goods, or services under this contract as well as any subsequent task/delivery orders issued under this contract (if applicable), all information technology contained therein shall be year 2000 compliant. Specifically the Contractor shall:

a. Perform, maintain, and provide an inventory of all major components to include structures, equipment, items, parts, and furnishings under this contract and each task/delivery order which may be affected by the Y2K compliance requirement.

b. Indicate whether each component is currently Year 2000 compliant or requires an upgrade for compliance prior to Government acceptance.

-- End of Section --

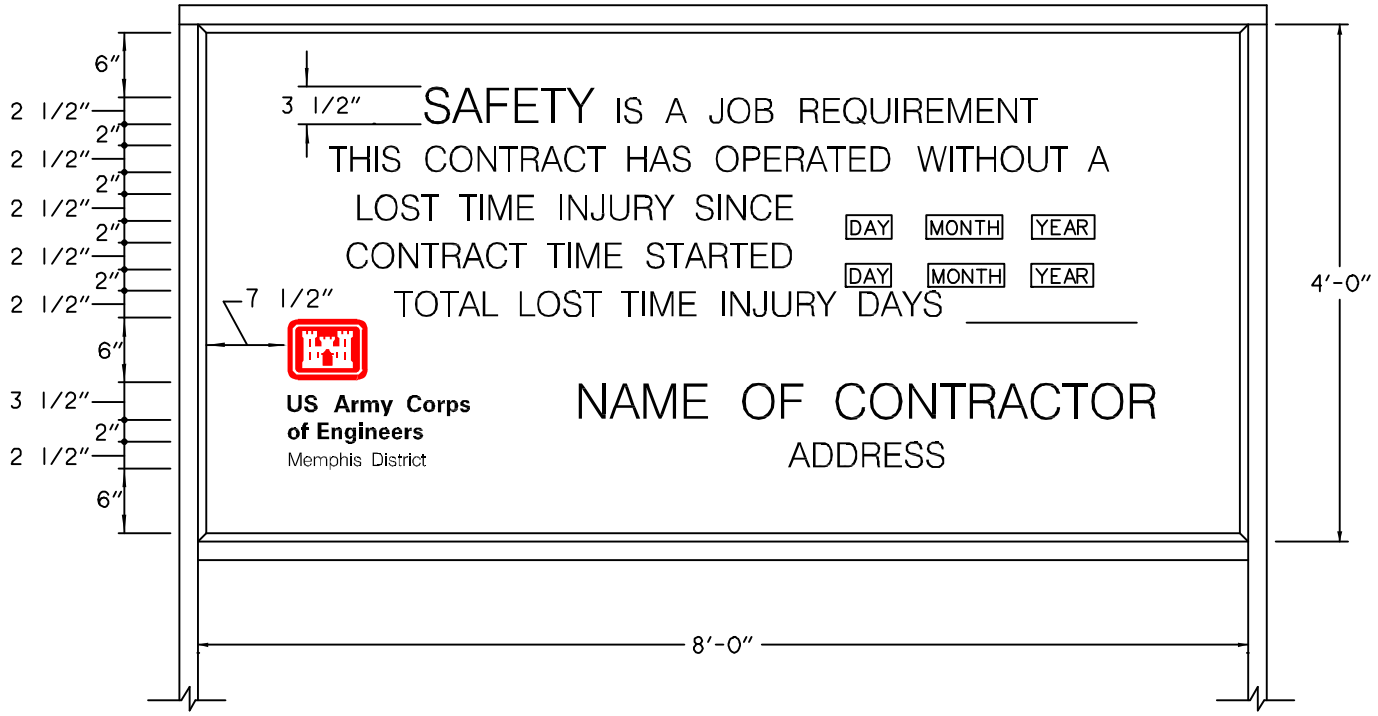

ELEVATION

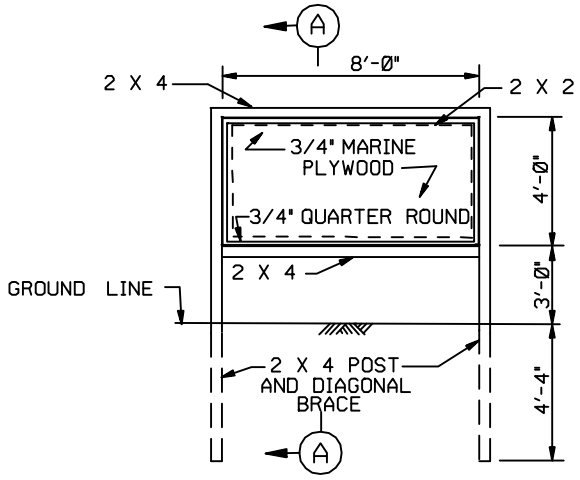

ELEVATION

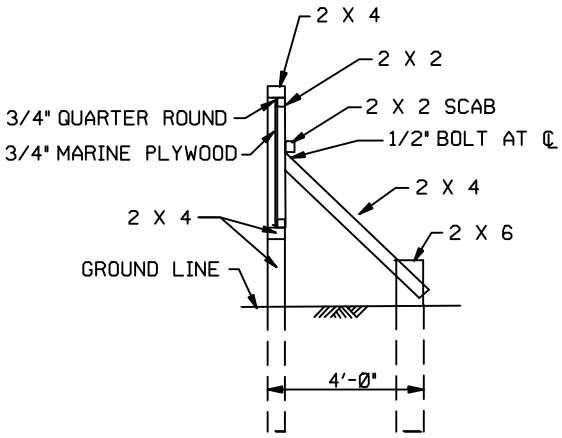

SECTION A-A

NOTES:

1. CONTRACTOR SHALL CONSTRUCT AND MAINTAIN A DURABLE SIGN AS SHOWN.
2. WOOD IN CONTACT WITH GROUND SHALL BE TREATED LUMBER.
3. ALL EXPOSED SURFACES SHALL BE WHITE HOUSE PAINT.
4. LETTERING SHALL BE BLACK.
5. ENGINEER CASTLE DECAL FURNISHED BY GOVERNMENT.
6. 22 GA. SHEET METAL MAY BE USED IN LIEU OF PLYWOOD.

US Army Corps of Engineers
Memphis District

ENGINEER CASTLE DETAIL

SCALE: NONE MARCH 1995

U.S. ARMY ENGINEER DISTRICT, MEMPHIS
CORPS OF ENGINEERS
MEMPHIS, TENNESSEE

SAFETY SIGN

SUBMITTAL REGISTER
(ER 415-1-10)

CONTRACT NO.

TITLE AND LOCATION: LOWER BUFFALO CREEK, CHANNEL CLEANOUT
MISSISSIPPI COUNTY, ARKANSAS

CONTRACTOR

SPECIFICATION SECTION: Stone Protection 02542

ACTIVITY NO. a	TRANS-MITTAL NO. b	ITEM NO. c	SPECIFICATION PARAGRAPH NUMBER d	DESCRIPTION OF ITEM SUBMITTED e	TYPE OF SUBMITTAL: DATA f	DRAWINGS g	INSTRUCTIONS h	SCHEDULES i	STATEMENTS j	REPORTS k	CERTIFICATES l	SAMPLES m	RECORDS n	CLASSI-FICATION: INFORMATION ONLY o	GOVERNMENT APPROVED p	REVIEWER q	CONTRACTOR SCHEDULE DATES: SUBMIT r	APPROVAL NEEDED BY s	MATERIAL NEEDED BY t	CONTRACTOR ACTION: CODE u	DATE v	SUBMIT TO GOVERN-MENT w	GOVERNMENT ACTION: CODE x	DATE y	REMARKS z
			2.1.2	Test Reports & Service Records						X			X	X		C									
			2.2.2	Certifide Test Report																					
			2.1.3	Plot on Gradation Curve of	X										X	C									
				Each Size Riprap Used																					

ENG FORM 4288-R, MAR 95 EDITION OF SEP 93 IS OBSOLETE PAGE_____ OF_____ PAGES

(Proponent CEMP-CE)

SUBMITTAL REGISTER
(ER 415-1-10)

CONTRACT NO.

TITLE AND LOCATION: LOWER BUFFALO CREEK, CHANNEL CLEANOUT
MISSISSIPPI COUNTY, ARKANSAS

CONTRACTOR

SPECIFICATION SECTION: Turfing 02935

ACTIVITY NO. a	TRANS-MITTAL NO. b	ITEM NO. c	SPECIFICATION PARAGRAPH NUMBER d	DESCRIPTION OF ITEM SUBMITTED e	TYPE OF SUBMITTAL: DATA f	DRAWINGS g	INSTRUCTIONS h	SCHEDULES i	STATEMENTS j	REPORTS k	CERTIFICATES l	SAMPLES m	RECORDS n	CLASSIFICATION: INFORMATION ONLY o	GOVERNMENT APPROVED p	REVIEWER q	CONTRACTOR SCHEDULE DATES: SUBMIT r	APPROVAL NEEDED BY s	MATERIAL NEEDED BY t	CONTRACTOR ACTION: CODE u	DATE v	SUBMIT TO GOVERN-MENT w	GOVERNMENT ACTION: CODE x	DATE y	REMARKS z
			1.4.1	Invoices from Suppliers (Fertilizer)					X					X		C									
			1.4.2	Certification Statements (Seed)							X			X		C									
			2.1.1	Certified Weight Tickets (Fertilizer)							X			X		C									
			2.1.1	Certified Quantitative Analysis Report							X			X		C									
			2.2.1	Invoices from Suppliers (Fertilizer)					X					X		C									
			2.2.2	Labling of Seed Containers (Certified)					X					X		C									

EDITION OF SEP 93 IS OBSOLETE

PAGE_____ OF_____ PAGES

ENG FORM 4288-R, MAR 95

(Proponent CEMP-CE)

SUBMITTAL REGISTER
(ER 415-1-10)

CONTRACT NO.

TITLE AND LOCATION

CONTRACTOR

SPECIFICATION SECTION

ACTIVITY NO. a	TRANS-MITTAL NO. b	ITEM NO. c	SPECIFICATION PARAGRAPH NUMBER d	DESCRIPTION OF ITEM SUBMITTED e	TYPE OF SUBMITTAL: DATA f	DRAWINGS g	INSTRUCTIONS h	SCHEDULES i	STATEMENTS j	REPORTS k	CERTIFICATES l	SAMPLES m	RECORDS n	CLASSI-FICATION: INFORMATION ONLY o	GOVERNMENT APPROVED p	REVIEWER q	CONTRACTOR SCHEDULE DATES: SUBMIT r	APPROVAL NEEDED BY s	MATERIAL NEEDED BY t	CONTRACTOR ACTION: CODE u	DATE v	SUBMIT TO GOVERN-MENT w	GOVERNMENT ACTION: CODE x	DATE y	REMARKS z

SUBMITTAL REGISTER
(ER 415-1-10)

CONTRACT NO.

TITLE AND LOCATION

CONTRACTOR

SPECIFICATION SECTION

ACTIVITY NO. a	TRANS-MITTAL NO. b	ITEM NO. c	SPECIFICATION PARAGRAPH NUMBER d	DESCRIPTION OF ITEM SUBMITTED e	TYPE OF SUBMITTAL: DATA f	DRAWINGS g	INSTRUCTIONS h	SCHEDULES i	STATEMENTS j	REPORTS k	CERTIFICATES l	SAMPLES m	RECORDS n	CLASSI-FICATION: INFORMATION ONLY o	GOVERNMENT APPROVED p	REVIEWER q	CONTRACTOR SCHEDULE DATES: SUBMIT r	APPROVAL NEEDED BY s	MATERIAL NEEDED BY t	CONTRACTOR ACTION: CODE u	DATE v	SUBMIT TO GOVERN-MENT w	GOVERNMENT ACTION: CODE x	DATE y	REMARKS z

TRANSMITTAL OF SHOP DRAWINGS, EQUIPMENT DATA, MATERIAL SAMPLES, OR MANUFACTURER'S CERTIFICATES OF COMPLIANCE *(Read instruction on the reverse side prior to initiating this form)*	DATE	TRANSMITTAL NO.

SECTION I - REQUEST FOR APPROVAL OF THE FOLLOWING ITEMS *(This section will be initiated by the contractor)*

TO:	FROM:	CONTRACT NO.	CHECK ONE: ☐ THIS IS A NEW TRANSMITTAL ☐ THIS IS A RESUBMITTAL OF TRANSMITTAL _____
SPECIFICATION SEC. NO. *(Cover only one section with each transmital)*	PROJECT TITLE AND LOCATION		CHECK ONE: THIS TRANSMITTAL IS FOR FIO GOV'T. APPROVAL

ITEM NO.	DESCRIPTION OF ITEM SUBMITTED *(Type size, model number/etc.)*	MFG OR CONTR. CAT., CURVE DRAWING OR BROCHURE NO. *(See instruction no. 8)*	NO. OF COPIES	CONTRACT REFERENCE DOCUMENT		FOR CONTRACTOR USE CODE	VARIATION *(See instruction No. 6)*	FOR CE USE CODE
				SPEC. PARA. NO.	DRAWING SHEET NO.			
a.	*b.*	*c.*	*d.*	*e.*	*f.*	*g.*	*h.*	*I.*

REMARKS	I certify that the above submitted items have been reviewed in detail and are correct and in strict conformance with the contract drawings and specifications except as otherwise stated. NAME AND SIGNATURE OF CONTRACTOR

SECTION II - APPROVAL ACTION

ENCLOSURES RETURNED (List by Item No.)	NAME, TITLE AND SIGNATURE OF APPROVING AUTHORITY	DATE

INSTRUCTIONS

Section 1 will be initiated by the Contractor in the required number of copies.

2. Each transmittal shall be numbered consecutively in the space provided for "Transmittal No.". This number, in addition to the contract number, will form a serial number for identifying each submittal. For new submittals or resubmits mark the appropriate box; on resubmittals, insert transmittal number of last submission as well as the new submittal number.

3. The "Item No." will be the same "Item No." as indicated on ENG FORM 4288 for each entry on this form.

4. Submittals requiring expeditious handling will be submitted on a separate form.

5. Separate transmittal form will be used for submittals under separate sections of the specifications.

6. A check shall be placed in the "Variation" column when a submittal is not in accordance with the plans and specifications--also, a written statement to that effect shall be included in the space provided for "Remarks".

7. Form is self-transmittal, letter of transmittal is not required.

8. When a sample of material or Manufacturer's Certificate of Compliance is transmitted, indicate "Sample" or "Certificate" in column c, Section I.

9. U.S. Army Corps of Engineers approving authority will assign action codes as indicated below in space provided in Section I, column i to each item submitted. In addition they will ensure enclosures are indicated and attached to the form prior to return to the contractor. The Contractor will assign action codes as indicated below in Section I, column g, to each item submitted.

THE FOLLOWING ACTION CODES ARE GIVEN TO ITEMS SUBMITTED

A -- Approved as submitted.

B -- Approved, except as noted on drawings.

C -- Approved, except as noted on drawings.
Refer to attached sheet resubmission required

D -- Will be returned by separate correspondence.

E -- Disapproved (See attached).

F -- Receipt acknowledge.

FX -- Receipt acknowledged, does not comply
as noted with contract requirements.

G -- Other *(Specify)*

10. Approval of items does not relieve the contractor from complying with all the requirements of the contract plans and specifications.

LOWER BUFFALO CREEK
MISSISSIPPI COUNTY, ARKANSAS
CHANNEL CLEANOUT
STORM WATER POLLUTION PREVENTION PLAN
FOR STORM WATER GENERAL PERMIT
U.S. ARMY CORPS OF ENGINEERS, MEMPHIS DISTRICT

1. LOCATION AND NATURE OF ACTIVITY

This project consists of a channel cleanout in the Lower Buffalo Creek, Mississippi County, Arkansas, Drainage District of Mississippi County, Arkansas.

A set of construction drawings showing the project location and the details of the channel cleanout will be located on the site at all times. The cleanout begins at Baseline Station 714+50 and extends north to Baseline Station 865+50.

2. AREA AFFECTED

The total area of the site, within the right-of-way limits, which will be impacted by construction is approximately 75 acres.

3. CONTROL OF POLLUTANTS DURING CONSTRUCTION

3.1 NON-STRUCTURAL MEASURES

3.1.1 General

Prior to the beginning of any construction, the Contracting Officer will identify all land resources to be preserved within the Contractor’s work area. The Contractor shall not remove, cut, deface, injure, or destroy land resources including trees, shrubs, vines, grasses, top soil, and land forms outside the construction limits without special permission. The Contractor shall provide effective protection for land, water and vegetation resources at all times. The Contractor shall construct or install temporary and/or permanent erosion and sedimentation control features as indicated herein to minimize pollutants entering Lower Buffalo Creek, other water bodies or wetlands.

3.1.2 Protection of Landscape

Trees, shrubs, vines, grasses, land forms and other landscape features indicated and defined on the contract drawings or as directed by the Contracting Officer to be preserved shall be

clearly identified by marking, fencing, wrapping with boards, or other approved techniques.

3.1.3 Reduction of Exposure of Unprotected Erodible Soils

All earthwork shall be planned and conducted to minimize the duration of exposure of unprotected soils. Vegetative ground cover shall not be destroyed, removed or disturbed more than 20 calendar days prior to grading or earth moving. Clearing shall progress in reasonably sized increments as needed to use the areas developed. To the extent feasible, material embankments, side slopes, back slopes, berms and any other exposed surfaces shall be stabilized by temporary seeding, mulching, fabric mats or other approved stabilization methods, as soon as possible after material placement, or within 14 days on areas that will remain unfinished more than 21 calendar days. Should construction be halted, for any reason, temporarily or permanently, for more than 21 days, in any portion of the site, temporary or permanent turfing measures, or other approved temporary stabilization of exposed areas, such as mulching, shall be accomplished within 14 days after construction is halted.

3.2 STRUCTURAL MEASURES

3.2.1 General

Temporary erosion and sediment control measures such as silt fences, check dams, and sedimentation basins shall be constructed and maintained until permanent drainage and erosion control facilities are complete and operative. Placement of perimeter controls shall commence with initiation of construction and shall remain in effect during the remainder of construction until final stabilization of those portions of the site upward of the perimeter control. Temporary erosion controls shall be maintained until final stabilization of exposed areas, after which they shall be removed. All structural devices shall be constructed in accordance with the Standard Drawing, TEMPORARY EROSION CONTROL DEVICES.

3.2.2 Silt Fences

If used, silt fences shall be constructed along the channel top bank in any location where stormwater may enter the stream or wetland, along inlet ditches, and any other areas necessary to minimize the entry of excavated material into Lower Buffalo Creek.

3.2.3 Check Dams

Check dams shall be constructed across inlet ditches, drains and swales using baled straw or equivalent devices to minimize sediment entry into the stream. Check dams shall be inspected for sediment accumulation after each significant rainfall and sediment removed when it reaches one-half the height of the barrier. Sediment removal shall include removal and disposition in a location where it will not erode into construction areas, water courses or wetlands.

3.2.4 Sediment Basins

Sediment from construction areas with 10 or more disturbed acres at one time shall be trapped in temporary or permanent sediment basins. After each storm, the basins shall be allowed to settle for 24 to 48 hours after which the basins shall be pumped dry. In order to maintain basin effectiveness, accumulated sediment shall be removed when the depth of sediment reaches one-third of the depth of structure in any part of the pool. Overflow shall be controlled by paved weir, by vertical overflow pipe draining from the surface, or by a spillway protected by baled straw filter barriers in the spillway and at the outlet toe of the spillway. The collected top soil sediment shall be reused for fill on the construction site, and/or conserved for use at another site(s). If used, the basins shall provide at least 3,600 cubic feet of storage for each acre drained. Where such basins are not used, other equivalent sediment control measures are required.

3.2.5 Other Measures

Other temporary erosion and sediment control measures such as berms, dikes, swales and drains, may be used with, or in lieu of, the above mentioned measures provided they are consistent with Best Management Practices (BMPs). They shall be maintained until permanent drainage and erosion control facilities are complete and operative. Earthen erosion control features shall be compacted and stabilized immediately with vegetation as specified in paragraphs 4.1.3 and 4.1.4.

3.2.6 Velocity Dissipation Devices

Should drains or swales be used, they shall be constructed with velocity dissipation devices (check dams) to

reduce the need for more stringent erosion control practices in erosive areas have been stabilized.

4. CONTROL OF POLLUTANTS AFTER CONSTRUCTION

4.1 ESTABLISHMENT OF TURF

4.1.1 General

Turf shall be established as a permanent erosion control measure along the clearing and excavation reaches and any other areas which are disturbed during construction. All material embankments, all berm areas, and any other disturbed areas shall be turfed. Turf shall be established in accordance with the Contract Specifications.

4.1.2 Fertilizer

Fertilizer shall be distributed uniformly over the areas to be seeded at a rate which will supply not less than 40 pounds of available nitrogen, 40 pounds of available phosphorous, and 40 pounds of potash per acre.

4.1.3 Seeding

Seed sown for permanent turfing shall be as specified in the technical specifications. Temporary seeding shall consist of grasses appropriate for the season when they are sown. A satisfactory method of sowing shall be employed, using approved mechanical power-drawn seeders, mechanical hand-seeders, broadcast-seeders, or other approved methods. When conditions are such by reason of drought, high winds, excessive moisture, or other factors that satisfactory results are not likely to be obtained, work shall be halted as directed and resumed only when conditions are favorable or when approved alternative or corrective measures and procedures have been effected. If inspection either during seeding operations or after there is a show of green indicates that areas have been left unplanted, additional seed shall be sown.

4.1.4 Mulching

If used, mulch shall be materials that do not contain noxious grass or weed seed that might be detrimental to the turfing being established or to adjacent farmland. Mulch shall be spread uniformly in a continuous blanket, using 2 tons per acre of

straw mulch or 1,200 pounds per acre of wood cellulose fiber mulch.

4.2 STATE AND LOCAL CONTROLS

There are no known State or local erosion and sediment control requirements applicable to this work other than those met by the requirements of this permit.

5. RUNOFF COEFFICIENT, IMPERVIOUS AREAS, SOILS

The runoff coefficient immediately after construction is estimated to range between 0.10 and 0.30. Once the material embankment and other disturbed areas have been re-vegetated, the runoff coefficient should return to pre-construction conditions with no increase in impervious areas.

Soils in the area consist of fat and lean clays with some sand and silty sands.

6. RECEIVING WATER

The receiving stream is the St. Francis River, located in Mississippi County, Arkansas.

7. OTHER CONSIDERATIONS

7.1 Construction is not within 1,000 feet of waters classified in 10 CSR 20-7.013, Water Quality Standards, as:

a. Public drinking water supply lakes
b. Outstanding National Resource Waters
c. Outstanding State Resource Waters
d. Streams designated for cold water sport fishery
e. A lake in EPA’s Clean Lakes Program

7.2 Construction is not within 100 feet of waters classified as major reservoirs; however, Lower Buffalo Creek is a permanent flow stream.

8. DEFINITIONS

8.1 Best Management Practices (BMPs) Schedules of activities, prohibitions of practices, maintenance procedures, and other management practices to prevent or reduce the pollution of waters of the State. BMPs also include treatment requirements, operation procedures and practices to control plant site runoff,

spillage or leaks, sludge or waste disposal, or drainage from raw material storage.

8.2 Commencement of Construction The initial disturbance of soils associated with clearing, grading, or excavating activities or other construction activities.

8.3 Drainage Swale A drainage way with a lining of grass, riprap, asphalt, concrete, or other material installed to convey runoff without causing erosion.

8.4 Check Dam Small temporary dams constructed across a swale or drainage ditch to reduce the velocity of runoff flows.

8.5 Final Stabilization All soil disturbing activities at the site have been completed, and a uniform perennial vegetative cover with a density of 85% of the cover for the area has been established or equivalent stabilization measures (such as the use of mulches or geo-textiles have been)employed.

9. CERTIFICATION

"I certify under penalty of law that I understand the terms and conditions of the general National Pollutant Discharge Elimination System (NPDES) permit that authorizes the storm water discharges associated with industrial activity from the construction site identified as part of this certification."

Dennis J. Kamper, Chief, Engineering Division 901-544-3227
Name & Official Title Phone No.

Signature Date Signed

Name & Official Title of Contractor Phone No.

Signature Date Signed

Name & Official Title of Subcontractor Phone No.

Signature Date Signed

TECHNICAL SPECIFICATIONS

TABLE OF CONTENTS

DIVISION 1 - GENERAL REQUIREMENTS

01025 MEASUREMENT AND PAYMENT
01130 ENVIRONMENTAL PROTECTION
01451 CONTRACTOR QUALITY CONTROL
01452 PROJECT SIGNS

DIVISION 2 - SITE WORK

02210 CLEARING AND CHANNEL CLEANOUT
02542 STONE PROTECTION
02700 CULVERT REMOVAL AND INSTALLATION
02935 ESTABLISHMENT OF TURF

DIVISIONS 3 THRU 16 - NOT USED

DIVISION 1 - GENERAL REQUIREMENTS

SECTION 01025

MEASUREMENT AND PAYMENT

TABLE OF CONTENTS

PART 1 GENERAL
1.1 LUMP SUM PAYMENT ITEMS
1.1.1 General
1.1.2 Lump Sum Items
1.2 UNIT PRICE PAYMENT ITEMS
1.2.1 General
1.2.2 Unit Price Items

PART 2 PRODUCTS (Not Used)

PART 3 EXECUTION (Not Used)

SECTION 01025

MEASUREMENT AND PAYMENT

PART 1 GENERAL

1.1 LUMP SUM PAYMENT ITEMS

1.1.1 General

Payment items for the work of this contract for which contract lump sum payments will be made are listed in the BIDDING SCHEDULE and described below. All costs for items of work, which are not specifically mentioned to be included in a particular lump sum or unit price payment item, shall be included in the listed lump sum item most closely associated with the work involved. The lump sum price and payment made for each item listed shall constitute full compensation for furnishing all plant, labor, materials, and equipment, and performing any associated Contractor quality control, meeting safety requirements, tests and reports, and for performing all work required for which separate payment is not otherwise provided.

1.1.2 Lump Sum Items

(1) "Mobilization and Demobilization"

a. Payment

Payment will be made for costs associated with operations necessary for mobilization and demobilization as specified in Section 00800 paragraph 1.29.

b. Unit of measure, lump sum: LS.

(2) "Clearing and Channel Cleanout"

a. Payment

Payment for clearing and excavation for channel cleanout, will be made at the contract lump sum unit price for “Clearing and Channel Cleanout”, which price and payment shall constitute full compensation for

furnishing all plant, labor, material, and equipment and performing all operations necessary for clearing of the areas specified herein or as indicated on the drawings; for removing and disposing of all cleared materials, excavation for channel cleanout to include silt and shoal removal, and inlet excavation, and disposal of excavated materials, and all other operations incidental thereto, all as specified in SECTION 02210
.

b. Unit of Measure, lump sum: LS

(3) “Rough Dressing, Fertilizing, and Seeding”

a. Measurement

Measurement of areas which require the combination of rough dressing, fertilizing and seeding as specified in SECTION 02935 will not be measured for payment.

b. Payment

Payment for rough dressing, fertilizing and seeding, will be made at the contract lump sum price for “Rough Dressing, Fertilizing, and Seeding,” which price and payment shall constitute full compensation for applicable preparation of ground surfaces; furnishing and distributing fertilizer and seed; compaction; all as specified in SECTION 02935; and performing all operations incidental thereto.

c. Unit of Measure, lump sum: LS.

(4) "Environmental Protection"

a. Payment

Payment will be made for costs associated with operations necessary for environmental protection as specified in SECTION 01130.

b. Unit of measure, lump sum: LS

1.2 UNIT PRICE PAYMENT ITEMS

1.2.1 General.

Payment items for the work of this contract on which the contract progress payments will be based are listed in the BIDDING SCHEDULE and described below. The unit price and payment made for each item listed shall constitute full compensation for furnishing all plant, labor, materials, and equipment, and performing any associated Contractor quality control, meeting safety requirements, tests and reports, and

for performing all work required for each of the unit price items.

1.2.2 Unit Price Items.

(1) "Filter Material" and "Riprap "R90""

a. Measurement

If the filter material, riprap "R90" are delivered by railroad, weights as acceptable to the railroad for freight charge purposes will be accepted as measurement of the filter material, and riprap "R 90". Copies of freight bills or certifications of weights acceptable to the railroad for freight charge purposes shall be furnished. If not delivered by railroad, but delivered by truck, the filter material, and riprap "R 90 will be measured for payment, in the presence of a Government Inspector unless waived by the Contracting Officer, by being weighed on approved, accurately calibrated scales furnished by and at the expense of the Contractor. Weight certificates furnished by a public weighmaster where available will be acceptable in lieu of such procedure when authorized by the Contracting Officer. Individual weight tickets shall be furnished the Government Inspector at the time of delivery.

b. Payment

Payment for filter material and riprap "R 90" will be made at the contract unit price as applicable per ton for "Filter Material" and "Riprap "R 90"" which price and payment shall include all costs of furnishing, hauling, handling, placement and maintaining the filter material and riprap "R 90"; all as specified in SECTION 02542.

c. Unit of measure, ton: TN

(2) “Corrugated Metal Pipe, 30-inch”

a. Measurement

The culverts will be measured for payment by the linear foot. Such measurement will be made in the field and will be based on the length installed as determined and approved by the Contracting Officer.

b. Payment

Payment for the culverts will be made at the unit price per linear foot for “Corrugated Metal Pipe, 30-inch”. which price and payment shall constitute full compensation for furnishing and installing the culvert; incidental excavation required for the installation of the new culvert; backfilling around and over the culvert, and all other operations incidental thereto; all as specified in Section 02700.

c. Unit of measure, linear feet: LF.

(3) “Flared End Section, 30-inch”

a. Payment

Payment for the flared end sections will be made at the contract unit price per each for “Flared End Section, 30-inch”. Such price and payment shall constitute full compensation for furnishing and installing the flared end sections, and incidental excavation required for installation of the flared end sections.

b. Unit of measure, each: EA.

PART 2 PRODUCTS (NOT USED)
PART 3 EXECUTION (NOT USED)

-- End of Section --

DIVISION 1 - GENERAL REQUIREMENTS

SECTION 01130

ENVIRONMENTAL PROTECTION

TABLE OF CONTENTS

PART 1 GENERAL
1.1 DEFINITIONS
1.2 ENVIRONMENTAL PROTECTION REQUIREMENTS
1.2.1 Environmental Protection Plan
1.2.1.1 Protection of Features
1.2.1.2 Procedures
1.2.1.3 Permit or License
1.2.1.4 Drawings
1.2.1.5 Environmental Monitoring Plans
1.2.1.6 Traffic Control Plan
1.2.1.7 Surface and Ground Water
1.2.1.8 Work Area Plan
1.3 SUBCONTRACTORS
1.4 PERMITS OBTAINED BY CORPS OF ENGINEERS
1.5 REGULATORY REQUIREMENTS

PART 2 PRODUCTS (Not Applicable)

PART 3 EXECUTION
3.1 PROTECTION OF ENVIRONMENTAL RESOURCES
3.1.1 Protection of Land Resources
3.1.1.1 Work Area Limits
3.1.1.2 Protection of Landscape
3.1.1.3 Reduction of Exposure of Unprotected Erodible Soils
3.1.1.4 Temporary Protection of Disturbed Areas
3.1.1.5 Erosion and Sedimentation Control Devices
3.1.1.6 Location of Contractor Facilities
3.1.1.7 Disposal Areas on Government Property
3.1.1.8 Temporary Excavation and Embankments
3.1.1.9 Disposal of Solid Wastes

3.1.1.10 Disposal of Chemical Wastes
3.1.1.11 Disposal of Discarded Materials
3.2 HISTORICAL, ARCHAEOLOGICAL AND CULTURAL RESOURCES
3.3 PROTECTION OF WATER RESOURCES
3.3.1 Cofferdam and Diversion Operations
3.3.2 Stream Crossings
3.3.3 Monitoring of Water Areas Affected by Construction Activities
3.4 PROTECTION OF FISH AND WILDLIFE RESOURCES
3.5 PROTECTION OF AIR RESOURCES
3.5.1 Particulates
3.5.2 Hydrocarbons and Carbon Monoxide
3.5.3 Odors
3.5.4 Monitoring Air Quality
3.6 INSPECTION
3.7 POST CONSTRUCTION CLEANUP
3.8 RESTORATION OF LANDSCAPE DAMAGE
3.9 MAINTENANCE OF POLLUTION FACILITIES
3.10 TRAINING OF CONTRACTOR PERSONNEL IN POLLUTION CONTROL

SECTION 01130

ENVIRONMENTAL PROTECTION

PART 1 GENERAL

1.1 DEFINITIONS

For the purpose of this specification, environmental pollution and damage is defined as the presence of chemical, physical, or biological elements or agents which adversely affect human health or welfare; unfavorably alter ecological balances of importance to human life; affect other species of importance to man; or degrade the utility of the environment for aesthetic, cultural and/or historical purposes

The control of environmental pollution and damage requires consideration of air, water, and land, and includes management of visual aesthetics, noise, solid waste, radiant energy and radioactive materials, as well as other pollutants.

1.2 ENVIRONMENTAL PROTECTION REQUIREMENTS

Provide and maintain, during the life of the contract, environmental protection. Plan for and provide environmental protective measures to control pollution that develops during normal construction practice. Plan for and provide environmental protective measures required to correct conditions that develop during the construction of permanent or temporary environmental features associated with the project. Comply with Federal, State, and local regulations pertaining to the environment, including but not limited to water, air, and noise pollution.

1.2.1 Environmental Protection Plan

Within 21 days after receipt of Notice of Award of the contract, the Contractor shall submit in writing an Environmental Protection Plan and, prior to starting work, meet with representatives of the Contracting Officer to develop mutual understanding relative to compliance with this provision and administration of the environmental protection program. Approval of the Contractor's plan will not relieve the Contractor of his responsibility for adequate and continuing control of pollutants and other environmental protection measures. The Government reserves the right to make changes in his environmental protection plan and operations as necessary to maintain satisfactory environmental protection performance. The Environmental Protection Plan shall include but not be limited to the following:

1.2.1.1 Protection of Features

The Contractor shall determine methods for the protection of features to be preserved within authorized work areas. The Contractor shall prepare a listing of methods to protect resources needing protection, i.e., trees, shrubs, vines, grasses and ground cover, landscape features, air and water quality, fish and wildlife, soil, historical, archaeological and cultural resources.

1.2.1.2 Procedures

The Contractor shall implement procedures to provide the required environmental protection and to comply with the applicable laws and regulations. The Contractor shall set out the procedures to be followed to correct pollution of the environment due to accident, natural causes or failure to follow the procedures set out in accordance with the Environmental Protection Plan.

1.2.1.3 Permit or License

The Contractor shall obtain all needed permits or licenses.

1.2.1.4 Drawings

The Contractor shall include drawings showing locations of any proposed temporary excavations or embankments for haul roads, stream crossings, material storage areas, structures, sanitary facilities, stockpiles of earth materials, and disposal areas for excess earth material and unsatisfactory earth materials.

1.2.1.5 Environmental Monitoring Plans

The Contractor shall include environmental monitoring plans for the job site which incorporate land, water, air and noise monitoring.

1.2.1.6 Traffic Control Plan

The Contractor shall include a traffic control plan for the job site.

1.2.1.7 Surface and Ground Water

The Contractor shall establish methods of protecting surface and ground water during construction activities.

1.2.1.8 Work Area Plan

The Contractor shall include a work area plan showing the proposed activity in each portion of the area and

identifying the areas of limited use or nonuse. The plan shall include measures for marking the limits of use areas.

1.3 SUBCONTRACTORS

Assurance of compliance with this section by subcontractors will be the responsibility of the Contractor.

1.4 PERMITS OBTAINED BY CORPS OF ENGINEERS

The Corps of Engineers will not obtain any permits for this project. See Contract Clause entitled "PERMITS AND RESPONSIBILITIES".

1.5 REGULATORY REQUIREMENTS

The Contractor shall comply with all state regulatory and statutory requirements.

PART 2 PRODUCTS (Not Applicable)

PART 3 EXECUTION

3.1 PROTECTION OF ENVIRONMENTAL RESOURCES

The environmental resources within the project boundaries and those affected outside the limits of permanent work under this contract shall be protected during the entire period of this contract. The Contractor shall confine his activities to areas defined by the contract drawings or specifications. Environmental protection shall be as stated in the following subparagraphs.

3.1.1 Protection of Land Resources

Prior to the beginning of any construction, the Contracting Officer will identify all land resources to be preserved within the Contractor's work area. The Contractor shall not remove, cut, deface, injure, or destroy land resources including trees, shrubs, vines, grasses, top soil, and land forms without special permission from the Contracting Officer. No ropes, cables, or guys shall be fastened to or attached to any trees for anchorage unless specifically authorized. Where such special emergency use is permitted, the Contractor shall provide effective protection for land and vegetation resources at all times as defined in the following subparagraphs.

3.1.1.1 Work Area Limits

Prior to any construction, the Contractor shall mark the areas where no work is to be performed under this contract. Isolated areas within the general work area which are to be saved and protected shall also be marked or fenced. Monuments and markers shall be protected before construction operations commence and during all construction operations. Where construction operations are to be conducted during darkness, the markers shall be visible during darkness. The Contractor shall convey to his personnel the purpose of marking and/or protection of all necessary objects.

3.1.1.2 Protection of Landscape

Trees, shrubs, vines, grasses, land forms and other landscape features to be preserved, indicated and defined on the drawings submitted by the Contractor as a part of the Environmental Protection Plan, shall be clearly identified by marking, fencing, or wrapping with boards, or any other approved techniques.

3.1.1.3 Reduction of Exposure of Unprotected Erodible Soils

Earthwork brought to final grade shall be finished as indicated and specified. Side slopes and back slopes shall be protected as soon as practicable upon completion of rough grading. All earthwork shall be planned and conducted to minimize the duration of exposure of unprotected soils. Except in instances where the constructed feature obscures borrow areas, quarries and waste material areas, these areas shall not initially be cleared in total. Clearing of such areas shall progress in reasonably sized increments as needed to use the areas as approved by the Contracting Officer.

3.1.1.4 Temporary Protection of Disturbed Areas

Such methods as necessary shall be utilized to effectively prevent erosion and control sedimentation, including but not limited to the following:

a. Retardation and Control of Runoff

Runoff from the construction site shall be controlled by construction of diversion ditches, benches, and berms to retard and divert runoff to protected drainage courses, and the Contractor shall also utilize any measures required by area-wide plans approved under Paragraph 208 of the Clean Water Act.

3.1.1.5 Erosion and Sedimentation Control Devices

The Contractor shall construct or install all temporary and permanent erosion sedimentation control features. Temporary erosion and sediment control measures such as berms, dikes, drains, sedimentation basin, grassing and mulching shall be maintained until permanent drainage and erosion control facilities are completed and operable.

3.1.1.6 Location of Contractor Facilities

The Contractor's field offices, staging areas, stockpiles, storage, and temporary buildings shall be placed in areas approved by the Contracting Officer. Temporary movement or relocation of Contractor facilities shall be made only on approval by the Contracting Officer.

3.1.1.7 Disposal Areas on Government Property

Disposal areas on Government property shall be managed and controlled to limit material to areas designated on the contract drawings and prevent erosion of soil or sediment from entering nearby water courses or lakes. Disposal areas shall be developed in accordance with the grading plan indicated on the contract drawings.

3.1.1.8 Temporary Excavation and Embankments

Temporary excavation and embankments shall be controlled to protect adjacent areas from contamination.

3.1.1.9 Disposal of Solid Wastes

Solid wastes (excluding clearing debris) shall be placed in containers which are emptied on a regular schedule. All handling and disposal shall be conducted to prevent contamination. The Contractor shall transport all solid waste off Government property and dispose of it in compliance with Federal, State, and local requirements for solid waste disposal.

3.1.1.10 Disposal of Chemical Wastes

Chemical wastes shall be stored in corrosion resistant containers, removed from the work area and disposed of in accordance with Federal, State, and local regulations.

3.1.1.11 Disposal of Discarded Materials

Discarded materials other than those which can be included in the solid waste category shall be handled as directed by the Contracting Officer.

3.2 HISTORICAL, ARCHAEOLOGICAL AND CULTURAL RESOURCES

Existing historical, archaeological and cultural resources within the Contractor's work area will be so designated by the Contracting Officer and precautions shall be taken by the Contractor to preserve all such resources as they existed at the time they were pointed out to the Contractor. The Contractor shall install all protection for these resources so designated on the contract drawings and shall be responsible for their preservation during this contract. If during construction items of apparent archaeological or historical interest are discovered, they shall be left undisturbed and the Contractor shall report the find immediately to

the Contracting Officer.

3.3 PROTECTION OF WATER RESOURCES

The Contractor shall keep construction activities under surveillance, management and control to avoid pollution of surface and ground waters. Special management techniques as set out below shall be implemented to control water pollution by the listed construction activities which are included in this contract.

3.3.1 Cofferdam and Diversion Operations

The Contractor shall plan his operations and perform all work necessary to minimize adverse impact or violation of the water quality standard. Construction operations for dewatering, removal of cofferdams, tailrace excavation, and tunnel closure shall be controlled at all times to limit impact of water turbidity on the habitat for wildlife and impacts on water quality for downstream use.

3.3.2 Stream Crossings

Stream crossings shall be controlled during construction. Crossings shall not violate water pollution control standards of the Federal, State or local government.

3.3.3 Monitoring of Water Areas Affected by Construction Activities

Monitoring of water areas affected by construction activities shall be the responsibility of the Contractor. All water areas affected by construction activities shall be monitored by the Contractor.

3.4 PROTECTION OF FISH AND WILDLIFE RESOURCES

The Contractor shall keep construction activities under surveillance, management and control to minimize interference with, disturbance to and damage of fish and wildlife. Species that require specific attention shall be listed by the Contractor prior to beginning of construction operations.

3.5 PROTECTION OF AIR RESOURCES

The Contractor shall keep construction activities under surveillance, management and control to minimize pollution of air resources. All activities, equipment, processes, and work operated or performed by the Contractor in accomplishing the specified construction shall be in strict accordance with the laws of the State or States in which the work is being performed and all Federal emission and performance laws and standards. Special management techniques as set out below shall be implemented to control air pollution by the construction activities which are included in the contract.

3.5.1 Particulates

Dust particles, aerosols, gaseous by-products from all construction activities, processing and preparation of materials, such as from asphaltic batch plants, shall be controlled at all times, including weekends, holidays and hours when work is not in progress. The Contractor shall maintain all excavations, stockpiles, haul roads, permanent and temporary access roads, plant sites, excess excavated material disposal areas, borrow areas, and all other work areas within or outside the project boundaries free from particulates which would cause the air pollution standards mentioned in the paragraph "PROTECTION OF AIR RESOURCES" to be exceeded or which would cause a hazard or a nuisance. Sprinkling, chemical treatment of an approved type, light bituminous treatment, baghouse, scrubbers, electrostatic precipitators or other methods will be permitted to control particulates in the work area. Sprinkling, to be efficient, must be repeated at such intervals as to keep the disturbed area damp at all times. The Contractor must have sufficient competent equipment available to accomplish this task. Particulate control shall be performed as the work proceeds and whenever a particulate nuisance or hazard occurs.

3.5.2 Hydrocarbons and Carbon Monoxide

Hydrocarbons and carbon monoxide emissions from equipment shall be controlled to Federal and State allowable limits at all times.

3.5.3 Odors

Odors shall be controlled at all times for all construction activities, processing and preparation of materials.

3.5.4 Monitoring Air Quality

Monitoring of air quality shall be the responsibility of the Contractor. All air areas affected by the construction activities shall be monitored by the Contractor.

3.6 INSPECTION

The Contracting Officer will notify the Contractor in writing of any observed noncompliance with the Contractor's environmental protection plan. The Contractor shall, after receipt of such notice, inform the Contracting Officer of proposed corrective action and take such action as may be approved. If the Contractor fails to comply promptly, the Contracting Officer may issue an order stopping all or part of the work until satisfactory corrective action has been taken. No time extensions will be granted or costs or damages allowed to the Contractor for any such suspension.

3.7 POST CONSTRUCTION CLEANUP

The Contractor shall clean up all area(s) used for construction.

3.8 RESTORATION OF LANDSCAPE DAMAGE

The Contractor shall restore all landscape features damaged or destroyed during construction operations outside the limits of the approved work areas. Such restoration shall be in accordance with the plans submitted for approval by the Contracting Officer.

3.9 MAINTENANCE OF POLLUTION FACILITIES

The Contractor shall maintain all constructed facilities and temporary pollution control devices for the duration of the contract or for that length of time construction activities create the particular pollutant.

3.10 TRAINING OF CONTRACTOR PERSONNEL IN POLLUTION CONTROL

The Contractor shall train his personnel in all phases of environmental protection. The training shall include methods of detecting and avoiding pollution, familiarization with pollution standards, both statutory and contractual, and installation and care of facilities (vegetative covers and instruments required for monitoring purposes) to insure adequate and continuous environmental pollution control.

-- End of Section --

DIVISION 1 - GENERAL REQUIREMENTS

SECTION 01451

CONTRACTOR QUALITY CONTROL

TABLE OF CONTENTS

PART 1 GENERAL
- 1.1 REFERENCES
- 1.2 PAYMENT

PART 2 PRODUCTS (Not Used)

PART 3 EXECUTION
- 3.1 GENERAL
- 3.2 QUALITY CONTROL PLAN
  - 3.2.1 General
  - 3.2.2 Content of the CQC Plan
  - 3.2.3 Acceptance of Plan
  - 3.2.4 Notification of Changes
- 3.3 COORDINATION MEETING
- 3.4 QUALITY CONTROL ORGANIZATION
  - 3.4.1 CQC System Manager
  - 3.4.2 CQC Staff
  - 3.4.3 Additional Requirement
- 3.5 SUBMITTALS
- 3.6 CONTROL
  - 3.6.1 Preparatory Phase
  - 3.6.2 Initial Phase
  - 3.6.3 Follow-up Phase
  - 3.6.4 Additional Preparatory and Initial Phases
- 3.7 TESTS
  - 3.7.1 Testing Procedure
  - 3.7.2 Testing at Validated Laboratories
    - 3.7.2.1 Laboratory Validation
    - 3.7.2.2 Capability Check
    - 3.7.2.3 Capability Recheck
  - 3.7.3 On-Site Laboratory

-

3.7.4 Furnishing or Transportation of Samples for Testing
3.8 COMPLETION INSPECTION
3.9 DOCUMENTATION
3.10 NOTIFICATION OF NONCOMPLIANCE

-

SECTION 01451

CONTRACTOR QUALITY CONTROL

PART 1 GENERAL

1.1 REFERENCES

The publications listed below form a part of this specification to the extent referenced. The publications are referred to in the text by basic designation only.

AMERICAN SOCIETY FOR TESTING AND MATERIALS (ASTM)

ASTM D 3740 Minimum Requirements for Agencies Engaged in the Testing and/or Inspection of Soil and Rock as Used in Engineering Design and Construction

ASTM E 329 Agencies Engaged in the Testing and/or Inspection of Materials Used in Construction

1.2 PAYMENT

Separate payment will not be made for providing and maintaining an effective Quality Control program, and all costs associated therewith shall be included in the applicable unit prices or lump-sum prices contained in the Bidding Schedule.

PART 2 PRODUCTS (Not Used)

PART 3 EXECUTION

3.1 GENERAL

The Contractor is responsible for quality control and shall establish and maintain an effective quality control system in compliance with the Contract Clause entitled "Inspection of Construction." The quality control

system shall consist of plans, procedures, and organization necessary to produce an end product which complies with the contract requirements. The system shall cover all construction operations, both on-site and off-site, and shall be keyed to the proposed construction sequence.

3.2 QUALITY CONTROL PLAN

3.2.1 General

The Contractor shall furnish for review by the Government, not later than 21 calendar days after receipt of Notice of Award of the contract, the Contractor Quality Control (CQC) Plan proposed to implement the requirements of the Contract Clause entitled "Inspection of Construction." The plan shall identify personnel, procedures, control, instructions, test, records, and forms to be used. The Government will consider an interim plan for the first 15 days of operation. Construction will be permitted to begin only after acceptance of the CQC Plan or acceptance of an interim plan applicable to the particular feature of work to be started. Work outside of the features of work included in an accepted interim plan will not be permitted to begin until acceptance of a CQC Plan or another interim plan containing the additional features of work to be started.

3.2.2 Content of the CQC Plan

The CQC plan shall include, as a minimum, the following to cover all construction operations, both on-site and off-site, including work by subcontractors, fabricators, suppliers, and purchasing agents:

a. A description of the quality control organization, including a chart showing lines of authority and acknowledgment that the CQC staff shall implement the three phase control system for all aspects of the work specified. The staff shall include a CQC system manager who shall report to the project manager or someone higher in the Contractor's organization. Project manager in this context shall mean the individual with responsibility for the overall management of the project including quality and production.

b. The name, qualifications (in resume format), duties, responsibilities, and authorities of each person assigned a CQC function.

c. A copy of the letter to the CQC System Manager signed by an authorized official of the firm which describes the responsibilities and delegates sufficient authorities to adequately perform the functions of the CQC System Manager, including authority to stop work which is not in compliance with the contract. The CQC System Manager shall issue letters of direction to all other various quality control representatives outlining duties, authorities, and responsibilities. Copies of these letters will also be furnished to the Government.

d. Procedures for scheduling, reviewing, certifying, and managing submittals, including those of

subcontractors, off-site fabricators, suppliers, and purchasing agents. These procedures shall be in accordance with SPECIAL CONTRACT REQUIREMENT entitled "Submittals"

. e. Control, verification, and acceptance testing procedures for each specific test to include the test name, specification paragraph requiring test, feature of work to be tested, test frequency, testing laboratory, and person responsible for each test.

f. Procedures for tracking preparatory, initial, and follow-up control phases and control, verification, and acceptance tests including documentation.

g. Procedures for tracking construction deficiencies from identification through acceptable corrective action. These procedures will establish verification that identified deficiencies have been corrected.

h. Reporting procedures, including proposed reporting formats.

i. A list of the definable features of work. A definable feature of work is a task which is separate and distinct from other tasks and has separate control requirements. It could be identified by different trades or disciplines, or it could be work by the same trade in a different environment. Although each section of the specifications may generally be considered as a definable feature of work, there are frequently more than one definable feature under a particular section. This list will be agreed upon during the coordination meeting.

3.2.3 Acceptance of Plan

Acceptance of the Contractor's plan is required prior to the start of construction. Acceptance is conditional and will be predicated on satisfactory performance during the construction. The Government reserves the right to require the Contractor to make changes in his CQC plan and operations including removal of personnel, as necessary, to obtain the quality specified.

3.2.4 Notification of Changes

After acceptance of the QC plan, the Contractor shall notify the Contracting Officer in writing a minimum of seven calendar days prior to any proposed change. Proposed changes are subject to acceptance by the Contracting Officer.

3.3 COORDINATION MEETING

After the Preconstruction Conference, before start of construction, and prior to acceptance by the Government of the Quality Control Plan, the Contractor shall meet with the Contracting Officer or

Authorized Representative and discuss the Contractor's quality control system. During the meeting, a mutual understanding of the system details shall be developed, including the forms for recording the CQC operations, control activities, testing, administration of the system for both on-site and off-site work, and the interrelationship of Contractor's Management and control with the Government's Quality Assurance. Minutes of the meeting shall be prepared by the Government and signed by both the Contractor and the Contracting Officer. The minutes shall become a part of the contract file. There may be occasions when subsequent conferences will be called by either party to reconfirm mutual understandings and/or address deficiencies in the CQC system or procedures which may require corrective action by the Contractor.

3.4 QUALITY CONTROL ORGANIZATION

3.4.1 CQC System Manager

The Contractor shall identify an individual within his organization at the worksite who shall be responsible for overall management of CQC and have the authority to act in all CQC matters for the Contractor. This CQC System Manager shall be subject to acceptance by the Contracting Officer. The CQC System Manager shall be assigned as System Manager but may have other duties in addition to quality control.

3.4.2 CQC Staff

A staff shall be maintained under the direction of the CQC System Manager to perform all CQC activities. An alternate will be identified to serve in the absence of the CQC System Manager. The staff must be of sufficient size to ensure adequate CQC coverage of all work phases, work shifts, and work crews involved in the construction. These personnel may perform other duties, but must be fully qualified by experience and technical training to perform their assigned CQC responsibilities and must be allowed sufficient time to carry out these responsibilities. The CQC plan will clearly state the duties and responsibilities of each staff member. All CQC Staff members or replacements shall be subject to acceptance by the Contracting Officer.

3.4.3 Additional Requirement

In addition to the above requirements, the CQC System Manager and his alternate, and also includes individuals appointed as alternates, shall have completed the course entitled "Construction Quality Management for Contractors". This course is periodically offered by the Memphis District as well as other Corps Districts.

3.5 SUBMITTALS

Submittals shall be in accordance with SPECIAL CONTRACT REQUIREMENT entitled "Submittals". The CQC organization shall be responsible for certifying that all submittals are in compliance with the

contract requirements.

3.6 CONTROL

The controls shall include at least three phases of control to be conducted by the CQC System Manager for all definable features of work, as follows:

3.6.1 Preparatory Phase

This phase shall be performed prior to beginning work on each definable feature of work and shall include:

a. A review of each paragraph of applicable specifications.

b. A review of the contract drawings.

c. A check to assure that all materials and/or equipment have been tested, submitted, and approved.

d. A check to assure that provisions have been made to provide required control inspection and testing.

e. Examination of the work area to assure that all required preliminary work has been completed and is in compliance with the contract.

f. A physical examination of required materials, equipment, and sample work to assure that they are on hand, conform to approved shop drawings or submitted data, and are properly stored.

g. A review of the appropriate activity hazard analysis to assure safety requirements are met.

h. Discussion of procedures for constructing the work including repetitive deficiencies. Document construction tolerances and workmanship standards for that phase of work.

i. A check to ensure that the portion of the plan for the work to be performed has been accepted by the Contracting Officer.

j. The Government shall be notified at least 24 hours in advance of beginning any of the required action of the preparatory phase. This phase shall include a meeting conducted by the CQC System Manager and attended by the superintendent, other CQC personnel (as applicable), and the foreman

responsible for the definable feature. The results of the preparatory phase actions shall be documented by separate minutes prepared by the CQC System Manager and attached to the daily CQC report. The Contractor shall instruct applicable workers as to the acceptable level of workmanship required in order to meet contract specifications.

3.6.2 Initial Phase

This phase shall be accomplished at the beginning of a definable feature of work. The following shall be accomplished:

a. A check of preliminary work to ensure that it is in compliance with contract requirements. Review minutes of the preparatory meeting.

b. Verification of full contract compliance. Verify required control inspection and testing.

c. Establish level of workmanship and verify that it meets minimum acceptable workmanship standards. Compare with sample panels as appropriate.

d. Resolve all differences.

e. Check safety to include compliance with and upgrading of the safety plan and activity hazard analysis. Review the activity analysis with each worker.

f. The Government shall be notified at least 24 hours in advance of beginning the initial phase. Separate minutes of this phase shall be prepared by the CQC System Manager and attached to the daily CQC report. Exact location of initial phase shall be indicated for future reference and comparison with follow-up phases.

g. The initial phase should be repeated for each new crew to work on-site, or any time acceptable specified quality standards are not being met.

3.6.3 Follow-up Phase

Daily checks shall be performed to assure continuing compliance with contract requirements, including control testing, until completion of the particular feature of work. The checks shall be made a matter of record in the CQC documentation. Final follow-up checks shall be conducted and all deficiencies corrected prior to the start of additional features of work which may be affected by the deficient work. The Contractor shall not build upon or conceal non-conforming work.

3.6.4 Additional Preparatory and Initial Phases

As determined by the Government, additional preparatory and initial phases may be conducted on the same definable features of work if the quality of on-going work is unacceptable, if there are changes in the applicable CQC staff, on-site production supervision or work crew, if work on a definable feature is resumed after a substantial period of inactivity, or if other problems develop.

3.7 TESTS

3.7.1 Testing Procedure

The Contractor shall perform specified or required tests to verify that control measures are adequate to provide a product which conforms to contract requirements. Testing includes operation and/or acceptance tests when specified. The Contractor shall procure the services of a Corps of Engineers approved testing laboratory or establish an approved testing laboratory at the project site, in accordance with paragraph 3.7.2 below. The Contractor shall perform the following activities and record and provide the following data:

a. Verify that testing procedures comply with contract requirements.

b. Verify that facilities and testing equipment are available and comply with testing standards.

c. Check test instrument calibration data against certified standards.

d. Verify that recording forms and test identification control number system, including all of the test documentation requirements, have been prepared.

e. Results of all tests taken, both passing and failing tests, will be recorded on the CQC report for the date taken. Specification paragraph reference, location where tests were taken, and the sequential control number identifying the test will be given. If approved by the Contracting Officer, actual test reports may be submitted later with a reference to the test number and date taken. An information copy of tests performed by an off-site or commercial test facility will be provided directly to the Contracting Officer. Failure to submit timely test reports as stated may result in nonpayment for related work performed and disapproval of the test facility for this contract.

-

3.7.2 Testing at Validated Laboratories

3.7.2.1 Laboratory Validation.

All testing of soil, gravel, aggregate, stone, concrete, and asphalt shall be performed by a testing laboratory validated by the Material Testing Center (MTC) of the Corps of Engineers. A list of validated commercial laboratories nearest the jobsite is provided below. Refer to the Memphis District, Corps of Engineers, Construction Branch website http://155.76.117.11/conops/CEValidatedLaboratories.htm for a complete and current list of validated commercial laboratories. If the Contractor proposes to use a commercial laboratory that is not validated or set up an on-site laboratory, he shall make arrangements for validation by contacting the Material Testing Center at Waterways Experiment Station, Vicksburg, Mississippi, telephone number: 601-634-3974, www.wes.army.mil/SL/MTC/inspection.htm. The Government will not be responsible for any cost associated with the validation of laboratories that are not currently validated. The validation process could take 30 to 90 days or more. The Contractor shall be responsible for determining the amount of time required for the validation of the proposed laboratory and accounting for this event in his progress schedule. If the Contractor elects to use a non-validated laboratory, work requiring testing shall not commence until the laboratory has been validated by MTC.

Anderson Engineering Consultants, Inc.
10205 Rockwood Road
Little Rock, AR 72204
(501) 455-4545

Grubbs, Howskyn, Barton, Wyatt, Inc
No. 1 Trigon Place
Little Rock, AR 72209
(501) 455-2536

Professional Service Industries, Inc
8669 Olive Boulevard
St. Louis, MO 63132
(314) 432-8073

Schultz Engineering Services, Inc.
4800 West Boulevard
Poplar Bluff, MO 63902
(573) 686-0806

Ogden Environmental & Energy Services
5211 Linbar Drive, Suite 513
Nashville, TN 37211
(615) 831-9202

Fuller, Mossbarger, Scott & May Engineers, Inc.
1409 North Forbes
Lexington, KY 40511-2050
(606) 233-0574

3.7.2.2 Capability Check

The Contracting Officer reserves the right to check laboratory equipment in the proposed laboratory for compliance with the standards set forth in the contract specifications and to check the laboratory technician's testing procedures and techniques. Laboratories utilized for testing soils, concrete, asphalt, and steel shall meet criteria detailed in ASTM D 3740 and ASTM E 329.

3.7.2.3 Capability Recheck.

If the selected laboratory fails the capability check, the Contractor will be assessed a charge to reimburse the Government for each succeeding recheck of the laboratory or the checking of a subsequently selected laboratory. Such costs will be deducted from the contract amount due the Contractor. There will be no extension of time allowed due to necessity to perform capability rechecks.

3.7.3 On-Site Laboratory

The Contracting Officer reserves the right to utilize the Contractor's control testing laboratory and equipment to make assurance tests and to check the Contractor's testing procedures, techniques, and test results at no additional cost to the Government.

3.7.4 Furnishing or Transportation of Samples for Testing

Costs incidental to the transportation of samples or materials will be borne by the Contractor. Samples of materials for test verification and acceptance testing by the Government shall be delivered by the Contractor to a location specified by the Contracting Officer.

3.8 COMPLETION INSPECTION

At the completion of all work or any increment thereof established by a completion time stated in the Special Contract Requirements entitled "Commencement, Prosecution, and Completion of Work," or stated elsewhere in the specifications, the CQC System Manager shall conduct an inspection of the work and develop a "punch list" of items which do not conform to the approved drawings and specifications. Such a list of deficiencies shall be included in the CQC documentation, as required by paragraph DOCUMENTATION below, and shall include the estimated date by which the deficiencies will be corrected. The CQC System Manager or staff shall make a second inspection to ascertain that all deficiencies have been corrected and so notify the Government. These inspections and any deficiency corrections required by this paragraph will be accomplished within the time stated for completion of the entire work or any particular increment thereof if the project is divided into increments by separate completion dates.

3.9 DOCUMENTATION

The Contractor shall maintain current records providing factual evidence that required quality control activities and/or tests have been performed. These records shall include the work of subcontractors and suppliers and shall be on an acceptable form that includes, as a minimum, the following information:

a. Contractor/subcontractor and their area of responsibility.

b. Operating plant/equipment with hours worked, idle, or down for repair.

c. Work performed each day, giving location, description, and by whom. When Network Analysis (NAS) is used, identify each phase of work performed each day by NAS activity number.

d. Test and/or control activities performed with results and references to specifications/drawings requirements. The control phase should be identified (Preparatory, Initial, Follow-up). List deficiencies noted along with corrective action.

e. Quantity of materials received at the site with statement as to acceptability, storage, and reference to specifications/drawings requirements.

f. Submittals reviewed, with contract reference, by whom, and action taken.

g. Off-site surveillance activities, including actions taken.

h. Job safety evaluations stating what was checked, results, and instructions or corrective actions.

i. Instructions given/received and conflicts in plans and/or specifications.

j. Contractor's verification statement.

These records shall indicate a description of trades working on the project; the number of personnel working; weather conditions encountered; and any delays encountered. These records shall cover both conforming and deficient features and shall include a statement that equipment and materials incorporated in the work and workmanship comply with the contract. The original and one copy of these records in report form shall be furnished to the Government daily within 24 hours after the date(s) covered by the report, except that reports need not be submitted for days on which no work is performed. As a minimum, one report shall be prepared and submitted for every seven days of no work and on the last day of a no work period. All calendar days shall be accounted for throughout the life of the contract. The first report following a day of no work shall be for that day only. Reports shall be signed and dated by the CQC System Manager. The report from the CQC System Manager shall include copies of test reports and copies of reports prepared by all subordinate quality control personnel.

3.10 NOTIFICATION OF NONCOMPLIANCE

The Contracting Officer will notify the Contractor of any detected noncompliance with the foregoing requirements. The Contractor shall take immediate corrective action after receipt of such notice. Such notice, when delivered to the Contractor at the worksite, shall be deemed sufficient for the purpose of notification. If the Contractor fails or refuses to comply promptly, the Contracting Officer may issue an order stopping all or part of the work until satisfactory corrective action has been taken. No part of the time

lost due to such stop orders shall be made the subject of claim for extension of time or for excess costs or damages by the Contractor.

-- End of Section --

DIVISION 1 - GENERAL REQUIREMENTS

SECTION 01452

PROJECT SIGNS

TABLE OF CONTENTS

PART 1 GENERAL
1.1 SCOPE
1.2 PROJECT SIGNS
1.3 PAYMENT

PART 2 PRODUCTS (Not Applicable)

PART 3 EXECUTION (Not Applicable)

SECTION 01452

PROJECT SIGNS

PART 1 GENERAL

1.1 SCOPE

The work covered by this section consists of furnishing, erecting, maintaining, and removing project signs.

1.2 PROJECT SIGNS

The Contractor shall furnish, erect, and maintain two single faced project signs at the location designated by the Contracting Officer. The signs shall be constructed of 3/4-inch marine grade plywood or 22 gage metal, mounted on a substantial framework of 2-inch material. Size, lettering, color and paint shall conform to the details shown on the drawing "Temporary Project Sign" included at the end of this section. In lieu of two signs, the Contractor may double-face a single sign at the specified location, provided such a sign and its erection and supports are approved by the Contracting Officer. Upon request, the Government will furnish without cost to the Contractor two decals of the Engineer Castle. The signs shall be erected as soon as practicable, but not later than 15 calendar days after the date established for commencement of work. The signs shall be removed upon completion of all other construction work under the contract and will become the property of the Contractor.

1.3 PAYMENT

No separate payment will be made for erecting, maintaining and removing projects signs and all costs in connection therewith will be considered an incidental obligation of the Contractor.

PART 2 PRODUCTS (Not Applicable)

PART 3 EXECUTION (Not Applicable)

--End of Section--

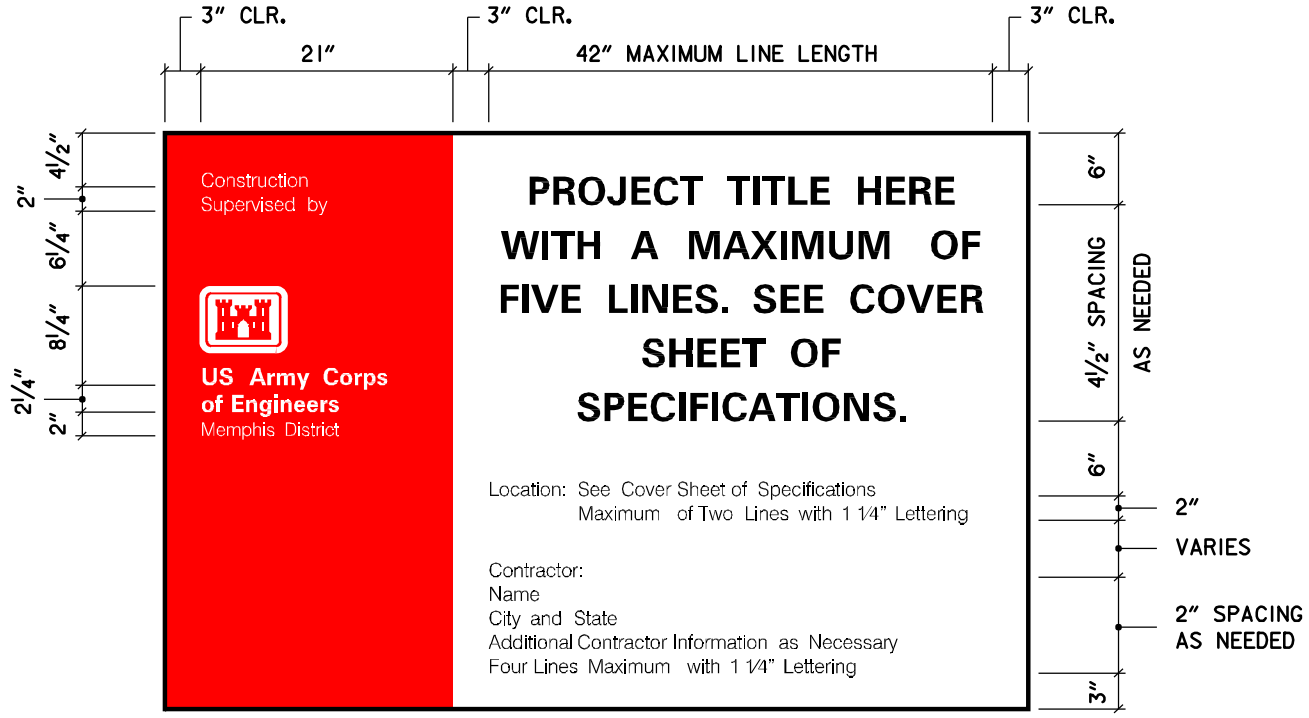

ELEVATION

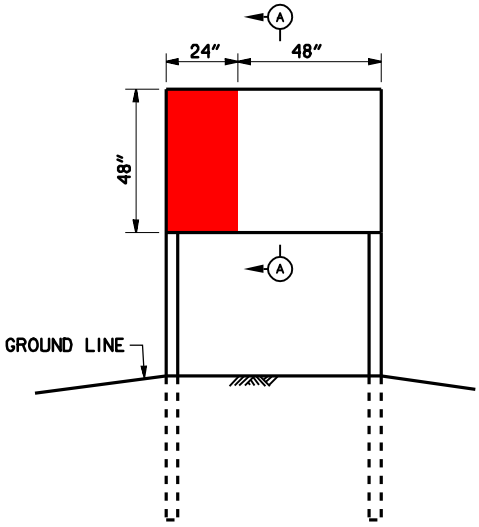

ELEVATION

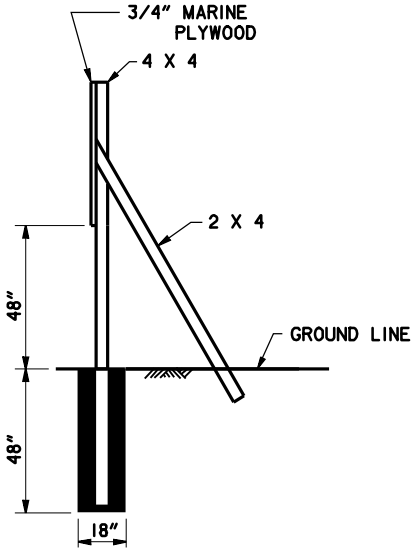

SECTION A–A

SPECIFICATIONS

1. SIGN PANEL SHALL BE 4' x 6' x 3/4" MARINE PLYWOOD OR 22 GAGE SHEET METAL.
2. POSTS AND BRACING SHALL BE TREATED, NO.1 GRADE YELLOW PINE.
3. ALL EXPOSED SURFACES SHALL BE GIVEN ONE COAT OF LINSEED OIL AND WIPED PRIOR TO PRIMING.
4. ALL EXPOSED SURFACES SHALL BE GIVEN ONE COAT OF WHITE AS PRIMER. SECOND COAT SHALL BE COMMUNICATIONS RED ON LEFT AND WHITE ELSEWHERE.
5. THE LEFT SECTION SHALL BE RED WITH WHITE LEGEND. THE RIGHT SECTION SHALL BE WHITE WITH BLACK LEGEND.
6. PAINT SHALL BE BENJAMIN MOORE NO. 120-60 POLY-SILICONE ENAMEL OR APPROVED
7. ALL LETTERING SHALL BE 1 1/4" EXCEPT FOR THE WORDS "US Army Corps of Engineers" AND THE PROJECT TITLE. THE WORDS "US Army Corps of Engineers" SHALL BE 1 1/2" TALL. THE PROJECT TITLE LETTERING SHALL BE A MINIMUM OF 1 1/2" TALL AND A MAXIMUM OF 3 1/2" TALL. THE LETTERING SIZE SHALL BE CHOSEN SUCH THAT LARGEST POSSIBLE LETTERS ARE USED WITHOUT EXCEEDING A MAXIMUM LINE LENGTH OF 42". THE NUMBER OF LINES IN THE PROJECT TITLE SHALL MATCH THAT SHOWN ON THE COVER SHEET OF THE SPECIFICATIONS.

SCALE: NONE JUNE 1998

U.S. ARMY ENGINEER DISTRICT, MEMPHIS
CORPS OF ENGINEERS
MEMPHIS, TENNESSEE

TEMPORARY PROJECT SIGN

DIVISION 2 – SITE WORK

SECTION 02210

CLEARING AND CHANNEL CLEANOUT

TABLE OF CONTENTS

PART 1 GENERAL
1.1 SCOPE
1.2 QUALITY CONTROL
1.2.1 Clearing
1.2.1.1. General
1.2.1.2 Existing Structures

1.2.2 Disposal of Cleared Materials
1.2.3 Excavation
1.2.4 Disposal of Excavated Material
1.2.5 Slides and Shoals
1.2.6 Existing Channel

PART 2 PRODUCTS (Not Applicable)

PART 3 EXECUTION
3.1 CLEARING
3.1.1 General
3.1.2 Removal of Rafted Driftwood and Maintenance of Channel
3.1.3 Saving of Trees
3.1.4 Miscellaneous
3.2 DISPOSAL OF CLEARING DEBRIS
3.2.1 General
3.2.2 Burning
3.2.3 Burying
3.2.4 Removal from Site
3.3 EXCAVATION

3.3.1 General
3.3.2 Embedment of Stone Protection
3.3.3 Lateral Ditches
3.3.4 New Inlet Drains
3.3.5 Existing Inlet Drains
3.4 DISPOSAL OF EXCAVATED MATERIAL
3.5 SLIDES AND SHOALS
3.5.1 Channel
3.5.2 Excavated Material Disposal Areas
3.5.2.1 General
3.5.2.2 Slides Caused by Foundation Failure
3.5.2.3 Slides Not Caused by Foundation Failure
3.6 EXISTING CHANNEL

SECTION 02210

CLEARING AND CHANNEL CLEANOUT

PART 1 GENERAL

1.1 SCOPE

The work covered by this section consists of furnishing all plant, labor, equipment, and materials, and performing all operations necessary for clearing; excavation to the lines and grades indicated therefor on the drawings, and/or as specified herein. Such work includes clearing and disposal of debris therefrom and channel excavation and disposal of excavated material.

1.2 QUALITY CONTROL

The Contractor shall establish and maintain quality control for the work specified in this section to assure compliance with contract requirements and maintain records of his quality control for all construction operations including but not limited to the following:

1.2.1 Clearing

1.2.1.1 General

Station to station limits; transverse clearing limits from applicable alignment; percentage of area complete, heights, limits, formation of lodgements in channel.

1.2.1.2 Existing Structures

The existing 5’ long metal irrigation stop and the 4x4 concrete stop structure as shown on drawing 2 of 4 shall not be disturbed.

1.2.2 Disposal of Cleared Materials

Method and location of burning, burying, and/or removal from site, damage to timber and/or areas within

right-of-way limit which are not to be cleared.

1.2.3 Excavation

Layout, grades, widths, slopes, alignment, transitions.

1.2.4 Disposal of Excavated Material

Layout, limits, maximum elevation, restricted areas, drainage, slopes.

1.2.5 Slides and Shoals

Location, limits, methods and equipment used where remedial work has been directed.

1.2.6 Existing Channel

Temporary traps to catch drift, location, limits, right-of-way agreements between the Contractor and landowners where work is outside the right-of-way shown on the drawings.

A copy of these records and tests, as well as the records of corrective action taken, shall be furnished the Government.

PART 2 PRODUCTS (Not Applicable)

PART 3 EXECUTION

3.1 CLEARING

3.1.1 General

Clearing units will be noted on the drawings.

The channel clearing shall begin at BL Station 714+50 and proceed continuously upstream to BL Station 865+50 as indicated on the drawings. Clearing shall consist of top bank to top bank the removal as close as practicable above the ground surface, of all trees, down timber, snags, stumps, rootwads, drift, brush, vegetation and other debris which interferes with excavation for channel cleanout. Areas to be cleared shall include the areas for operation of the Contractor's equipment. Optimum effort shall be exercised by the Contractor to preserve as many trees as practicable outside the required clearing areas. Clearing shall be maintained not more than 2000 feet or 20 days in advance of excavation work. Within the station limits of the work the following areas shall be cleared.

(1) Areas within the slope lines of the channel where excavation is required or leaning trees within the channel top bank.

(2) The 20-foot berm area between the top bank of channel and excavated material disposal area.

(3) Areas to be used for excavated material disposal.

(4) Areas within the slope lines of inlet drains.

Within areas where clearing is required, all growth, stumps, partially buried logs, snags, and other projections shall be removed by uprooting or shall be cut off flush with the existing surfaces, or as indicated on the drawings unless otherwise directed by the Contracting Officer.

3.1.2 Removal of Rafted Driftwood and Maintenance of Channel

Within the station limits of the work, all floating rafts or other lodgments and accumulation of driftwood which exist within the channel where excavation is required at the beginning of the contract period or which may form during the life of the contract within any portions of the channel, shall be removed and shall be disposed of as prescribed for other clearing debris below. Prior to the commencement of the removal of such rafted driftwood, the Contractor shall install traps or other suitable devices as approved by the Contracting Officer to prevent the rafts from being dislodged and floating away. The cutting and/or removal of logs and other pieces which key the rafts together shall be last in order of removal.

3.1.3 Saving of Trees

All trees that are 20” or greater in diameter at chest height shall be saved.

3.1.4 Miscellaneous

Clearing in other areas within the right-of-way limits which are not specified hereinabove to be cleared shall be only that necessary for construction purposes and operation of equipment, and shall be subject to the approval of the Contracting Officer. Optimum effort shall be exercised by the Contractor to preserve as many trees as practicable outside the required clearing areas. Any existing bridges, culverts, or riprap encountered within the project right of way shall not be disturbed.

3.2 DISPOSAL OF CLEARING DEBRIS

3.2.1 General

All debris resulting from clearing operations on this contract shall, at the Contractor's option, be disposed of by burning, burying, or removal from the site. The Contractor shall make a reasonable effort to utilize this last method to channel materials of value resulting from clearing operations into beneficial use.

3.2.2 Burning

The Contractor shall comply with the applicable pollution restrictions of the State of Arkansas. Subject to such restrictions and obtaining any permit which may be required by said State, the Contractor may burn material within the contract area, and at any time within the contract period. If the Contractor elects to burn, any remaining rootwads or unburned wood shall be buried or removed from the site. Burning operations shall be conducted so as to prevent damage to standing timber or other flammable growth. The Contractor will be responsible for any damage to life and/or property resulting from fires that are started by his employees or as a result of his operations. The Contractor shall furnish, at the site of burning operations, adequate fire fighting equipment to properly equip his personnel for fighting fires. Fires shall be guarded at all times and shall be under constant surveillance until they have been extinguished.

3.2.3 Burying

If the Contractor elects to bury the debris, it shall be covered with a minimum of 2 feet of the excavated material embankment. All material disposed of by burying within a cultivated area shall be placed a minimum of 2 feet below natural ground. Debris placed for burying shall be placed in such manner that it will not disperse from the right-of-way prior to being covered with earth materials. No debris shall be buried within the berm areas as indicated on the drawings.

3.2.4 Removal from Site

The Contractor may elect to remove debris from the site of the work. Inorganic materials shall be removed from the site in compliance with all applicable Federal, State and local laws. The Contractor may, at his option retain for his own use or disposal by sale or otherwise any such materials of value. The Government assumes no responsibility for the protection or safekeeping of any materials retained by the Contractor. Such materials shall be removed from the site of the work before the date of completion of the work under this contract. The locations and manner of placement of clearing debris on the right-of-way by the Contractor for his convenience prior to removal of the debris from the site of the work shall be subject to the approval of the Contracting Officer. When debris from clearing operations is placed on adjacent property, the Contractor shall obtain, without cost to the Government, additional rights-of-way for such purpose. Such material shall be placed so as not to interfere with roads, drainage, or other improvements and in such a manner as to eliminate the possibility of its entering the channel.

3.3 EXCAVATION

3.3.1 General

Within the channel cleanout limits of BL Station 714+50 and BL Station 865+50 the Contractor shall excavate and remove all material of whatever nature encountered as may be necessary to produce the theoretical cross sections, bottom grades, and alignment as indicated on the drawings and/or specified herein. The minimum bottom width varies as shown on the drawings with side slopes not to exceed 1V on 2.5H as indicated on the drawings. There shall be no work beyond the top bank except at inlet drains as specified below. Refill of over-excavation will not be required. No excavated material shall be allowed to drift or fall off into the channel during excavation operations. The excavation shall be commenced at the downstream limits of the work and shall be carried continuously upstream; however, if weather, stream elevations, or other conditions are such that work cannot be effectively prosecuted in this order and work at other locations can be performed without endangering the work or other property, a change in the order of work may be authorized by the Contracting Officer. All clearing and excavation work shall be done from one side.

3.3.2 Embedment of Stone Protection.

The Contractor shall excavate, in areas where filter material and riprap are required, in such a manner that the filter material and riprap are placed beneath the theoretical cross section as indicated on the drawings. Tolerances for such excavation shall be subject to the tolerances for filter material and riprap as specified in SECTION 02542 paragraphs 3.2 and 3.3.2. The finished grade of the adjacent channel excavation shall conform to the finished riprap grade at and in the vicinity of the junctions of these surfaces.

3.3.3 Lateral Ditches.

When so directed, the Contractor shall excavate lateral ditches along the outer limits of the right-of-way as may be necessary to provide outlets for drainage of isolated low areas where the natural drainage outlet will be blocked by the disposition of excavated material. All lateral ditches shall be excavated with 1V on 3H side slopes and bottom widths of 6 feet, unless otherwise directed by the Contracting Officer. The exact locations and extent of lateral ditches will be determined by the Contracting Officer as the channel work progresses. Insofar as practicable, the Contractor will be notified of the location and extent of lateral ditches that are required prior to the time the clearing adjacent thereto is completed.

3.3.4 New Inlet Drains.

The Contractor shall excavate new inlet drains within the right-of-way limits on the side of the channel and in reaches where excavation is required, at the locations as directed by the Contracting Officer to provide for drainage into the channel. Bottom grades of such inlet drains shall be a line descending from the existing ground elevation at the right-of-way limit line to the intersection of the variable slope at the top bank

distance of the improved channel, as shown in the Inlet Ditch Riprap Installation detail on the drawings. Each such drain shall be excavated with 1V on 2H side slopes and a varying bottom width as shown on the drawings, unless otherwise directed by the Contracting Officer.

3.3.5 Existing Inlet Drains

Existing drains, on the side of the channel and in reaches where excavation is required, shall be enlarged along the existing alignment between the right-of-way limit line and the improved channel of Lower Buffalo Creek. Existing culverts shall be paved with riprap as noted on drawing No. 2. Bottom grades of such enlargements shall be a line descending from the existing bottom elevation at the right-of-way limit line to the bottom grade of the improved channel of Lower Buffalo Creek at the intersection of the inlet drain with Lower Buffalo Creek. Side slopes and bottom widths shall be approximately equal to the existing side slopes and widths; however, side slopes shall not be steeper than 1V on 2H nor shall the bottom width be less than 6 feet. The Contractor shall notify the Contracting Officer of all culverts and pipes encountered but not shown on the drawings and he shall not disturb such culverts and pipes until directed to do so. The Contractor shall riprap the existing drains as directed by the Contracting Officer.

3.4 DISPOSAL OF EXCAVATED MATERIAL

Excavated material shall be disposed of along the left top bank between BL Station 714+50 and BL Station 865+50 as indicated on the drawings. The Contractor shall be responsible for placing the various materials to be disposed of in such locations within the prescribed disposal areas, and berm areas that they will not flow or slide outside the fill areas. The height of excavated material disposal area may vary but shall at no time exceed the maximum elevation indicated therefor on the drawings. The crown width of excavated material disposal area shall be variable as indicated on the drawings. End slopes of the excavated material embankment shall not be steeper than 1V on 2.5H. Side slopes of the excavated material disposal area shall be as shown on drawings. Placement of excavated material shall be such that water will not be impounded within the disposal areas. Dressing of material will be required as necessary to provide drainage and as specified in SECTION 02935 - ESTABLISHMENT OF TURF. Sunken logs, stumps, driftwood, and other debris removed concurrently with the excavation shall be disposed of as specified for clearing debris in 3.2 above. Placement of excavated material shall be restricted as specified in the tabulation below:

(1) No excavated material shall be placed within ten feet (10) of the top banks of existing inlet drains.

(2) No excavated material shall be placed closer than a minimum twenty feet (20), of the left top bank of the channel as shown on the drawings

(3) No excavated material shall be placed closer than twenty five feet (25’) of utility lines, except that necessary to construct the berm areas specified hereinabove.

(4) No excavated material shall be placed within fifty feet (50’) of the centerline of roads.

(5) No excavated material shall be placed within twenty feet (20') of any existing buildings within the project right of way.

3.5 SLIDES AND SHOALS

3.5.1 Channel

In case sliding or shoaling occurs in any part of the excavated channel, after being excavated as prescribed in 3.3 above, but prior to the final acceptance of all work under the contract, the Contractor shall remove such portions of the slides or shoals as the Contracting Officer may direct. In case the slide or shoal is caused through the fault of the Contractor, it shall be removed without cost to the Government. In case the slide or shoal is due to no fault of the Contractor, an equitable adjustment in the contract price will be made under the CONTRACT CLAUSE entitled "Changes." Material removed from the slides and/or shoals shall be disposed of in designated disposal areas in accordance with the provisions of 3.4 above. Shoals caused by failure of the Contractor to keep the channel clear of obstructions until final acceptance of the entire work will be considered to be the fault of the Contractor. Such shoals shall be removed at the Contractor's expense.

3.5.2 Excavated Material Disposal Areas

3.5.2.1 General

In the event slides occur in any part of the excavated material disposal areas placed under this contract, during construction or after completion, but prior to final acceptance of all work under the contract, the Contractor, upon receipt of written order of the Contracting Officer, shall repair the slides as directed.

3.5.2.2 Slides Caused by Foundation Failure

In case the slide was caused by a foundation failure not due to the fault of the Contractor, the Contractor will be paid for its repair. An equitable adjustment in the contract price will be made in accordance with the CONTRACT CLAUSE entitled "Changes." In case the slide is caused through the fault of the Contractor, the repairs shall be made at no additional cost to the Government.

3.5.2.3 Slides Not Caused by Foundation Failure

Except as provided in 3.5.2.2 above, any material which flows or slides outside of the excavated material disposal limits shall be removed by the Contractor and replaced within the prescribed disposal limits at no cost to the Government.

3.6 EXISTING CHANNEL

The Contractor shall construct temporary traps to catch drift and/or conduct his operations in such manner that the improved channel within the limits of work, and the existing channel below the limits of the work will not be deteriorated. Any drift racks, temporary crossings or other obstructions within such channel caused through the fault or negligence of the Contractor shall be removed as directed by the Contracting Officer at the expense of the Contractor. In the performance of this work, the necessary right-of-way for ingress, egress and operation of equipment and area for disposal of excavated material and debris resulting from such obstruction removal outside the right-of-way limits indicated on the drawings shall be obtained by the Contractor from the landowners at the expense of the Contractor. Three copies of the agreement between the Contractor and each landowner granting the Contractor permission for the use of lands for such purpose shall be furnished the Contracting Officer before the Contractor's entry thereon.

--End of Section--

DIVISION 2 - SITE WORK

SECTION 02542

STONE PROTECTION

TABLE OF CONTENTS

PART 1 GENERAL
1.1 SCOPE
1.2 QUALITY CONTROL
1.3 APPLICABLE PUBLICATION

PART 2 PRODUCTS
2.1 STONE
2.1.1 General
2.1.2 Sources and Evaluation Testing
2.1.3 Gradation
2.1.4 Test Method
2.1.5 Gradation Test
2.2 FILTER MATERIALS
2.2.1 General
2.2.2 Gradation

PART 3 EXECUTION
3.1 BASE PREPARATION
3.2 PLACEMENT OF FILTER MATERIAL
3.3 RIPRAP
3.3.1 General
3.3.2 Placement

SECTION 02542

STONE PROTECTION

PART 1 GENERAL

1.1 SCOPE

The work provided for herein consists of furnishing all plant, labor, equipment and materials, and performing all operations in connection with the construction of the stone protection, including foundation preparation, placement of filter material, and placement of riprap and grouting, all in accordance with these specifications and the contract drawings.

1.2 QUALITY CONTROL

The Contractor shall establish and maintain quality control for the work specified in the section to assure compliance with contract requirements and maintain records of his quality control for all construction operations including but not limited to the following:

(1) Foundation

Preparation (line and grade).

(2) Inspection

At the worksite to ensure use of specified materials.

(3) Filter

Gradation and placement.

(4) Riprap

Gradation and placement.

A copy of these records and tests, as well as the records of corrective action taken, shall be furnished the

Government.

1.3 APPLICABLE PUBLICATION

The following publication of the issue listed below, but referred to thereafter by basic designation only, forms a part of this specification to the extent indicated by the reference thereto:

U.S. ARMY CORPS OF ENGINEERS, HANDBOOK FOR CONCRETE AND CEMENT (CRD)

CRD-C 106-93	Unit Weight and Voids in Aggregate
CRD-C 107-94	Specific Gravity and Absorption of Coarse Aggregate

PART 2 PRODUCTS

2.1 STONE

2.1.1 General

All stone shall be durable material as approved by the Contracting Officer. The sources from which the Contractor proposes to obtain the material shall be selected well in advance of the time when the material will be required. In case an undeveloped source is to be used, the Contractor will be required to show that an ample quantity of material is available before quality tests will be made. Stone for riprap shall be of a suitable quality to ensure permanence in the structure and in the climate in which it is to b
e used. It shall be free from cracks, seams and other defects that would tend unduly to increase its deterioration from natural causes. The inclusion of objectionable quantities of dirt, sand, clay and rock fines will not be permitted.

2.1.2 Sources and Evaluation Testing

Riprap shall be obtained in accordance with the provisions in SECTION 00800 paragraph 1.30 STONE SOURCES. If the Contractor proposes to furnish riprap from a source not listed in SECTION 00800 paragraph 1.30, the Government will make such investigations as necessary to determine whether acceptable stone can be produced from the proposed source. Satisfactory service records on work outside the Corps of Engineers will be acceptable. If no such records are available, the Government will make tests to assure the acceptability of the stone. The tests to which the stone may be subjected will include petrographic analysis, specific gravity, abrasion, absorption, wetting and drying, freezing and thawing and

such other tests as may be considered necessary by the Contracting Officer. The following guidance is provided for use by the Contractor in analyzing a source of stone not listed in SECTION 00800 paragraph 1.30 STONE SOURCES. Stone that weighs less than 155 lbs/c.f. or has more than 2% absorption will not be accepted unless other tests and service records show that the stone is satisfactory. The method of tests for unit weight will be CRD-C 106, "Standard Test method for Unit Weight and Voids in Aggregate". The method of tests for absorption will be CRD-C 107, entitled "Standard Test Method for Specific Gravity and Absorption of Coarse Aggregate". Samples of stone from a source not listed in SECTION 00800 paragraph 1.30 STONE SOURCES shall be submitted to the Contracting Officer for testing and acceptance prior to delivery of any stone to the site of the work. Samples shall consist of at least 7 pieces of stone, roughly cubical in shape and weighing not less than 100 pounds each. All such samples shall be taken by the Contractor under the supervision of the Contracting Officer. The samples shall be shipped at the Contractor's expense to the Waterways Experiment Station, Vicksburg, Mississippi, at least 60 days in advance of the time the placing of the stone is expected to begin. The tests will be conducted in accordance with applicable Corps of Engineers methods of tests given in the Handbook for Concrete and Cement, and will be performed at the Waterways Experiment Station, Vicksburg, Mississippi. The cost of testing will be borne by the Government.

2.1.3 Gradation

Gradation shall conform to the table below and to Plate I at the end of this section and format thereof shall be as shown. Neither the width nor the thickness of any piece shall be less than one-third of its length. An allowance of 5 percent by weight for inclusion of quarry spalls will be permitted. Stone shall be reasonably well graded between the largest and smallest pieces. The table below describes the upper and lower limit curves for the riprap gradation. The graph of the riprap when plotted on ENG Form 4055 with the limit curves plotted thereon is inserted at the end of this section as Plate I. The Contractor shall submit to the Contracting Officer a copy of the plots on the gradation graph for each size of riprap furnished.

TABLE I
(For Riprap “R 90”)

Percent Lighter by Weight (SSD)	Limits of Stone Weight, lb.
100	90-40
50	40-20
15	20-5

2.1.4 Test Method

Gradation test method shall conform to the requirements of "LMVD Standard Test method for Gradation of

Riprap" which is inserted at the end of this section as PLATE II; an Example Gradation and Worksheet, an Example Gradation plotted on ENG Form 4055, and example Gradation Test Data Sheet; all inserted at the end of this section as Plates III, IV and V.

2.1.5 Gradation Test

The Contractor shall perform a gradation test or tests on the riprap at the quarry. At least one gradation test shall be performed. The sample shall be taken by the Contractor under the supervision of the Contracting Officer, shall consist of not less than 15 tons of riprap and shall be collected in a random manner which will provide a sample which accurately reflects the actual gradation arriving at the jobsite. If collected by the truckload, each truckload shall be representative of the gradation requirements. The Contractor shall provide all necessary screens, scales and other equipment, and the operating personnel therefor, and shall grade the samples, all at no additional cost to the Government.

2.2 FILTER MATERIALS

2.2.1 General

Filter material shall consist of gravel or crushed stone. The material shall be composed of tough, durable particles, shall be reasonably free from thin, flat and elongated pieces, and shall contain no organic matter nor soft, friable particles in quantities considered objectionable by the Contracting Officer.

2.2.2 Gradation

U.S. Standard Sieve No.	Permissible Limits Percent by Weight, Passing
3-inch	100
1 1/2-inch	85-100
3/4-inch	35-70
3/8-inch	5-40
No. 4	0-10

The material shall be well-graded between the limits shown. The Contractor shall furnish a certified test report which certifies that the supplied filter material meets the above gradation and also furnish a representative sample of this same material to the Government.

PART 3 EXECUTION

3.1 BASE PREPARATION

Areas on which the filter material and riprap are to be placed shall be dressed to conform to cross sections shown on the contract drawings and as specified in SECTION 02225 - EARTHWORK. Humps and depressions within the slope lines shall be dressed to provide relatively smooth and uniform surfaces. Immediately prior to placing the filter material, the prepared base will be inspected by the Contracting Officer and no material shall be placed thereon until that area has been approved.

3.2 PLACEMENT OF FILTER MATERIAL

Filter material for riprap bedding shall be spread uniformly on the prepared base to the lines and grades as indicated on the contract drawings and in such manner as to avoid damage to the prepared base. Any damage to the surface of the prepared base during placing of the material shall be repaired before proceeding with the work. Compaction of material placed on the prepared base will not be required, but each layer shall be finished to present a reasonably even surface, free from mounds or windrows. The allowable deviation from the prescribed thickness shall be plus 2 inches.

3.3 RIPRAP

3.3.1 General

Riprap shall be placed on the prepared base and/or filter material within the limits shown on the contract drawings. Riprap shall be as specified in 2.1 above.

3.3.2 Placement

Riprap shall be placed in a manner which will produce a reasonably well-graded mass of rock with the minimum practicable percentage of voids, and shall be constructed, within the specified tolerance, to the lines and grades indicated on the contract drawings. A tolerance of plus 6 inches and minus 3 inches from the required finished surface of the riprap will be allowed provided these extremes do not occur adjacent to each other, and that neither extreme exists over more than 10 percent of the total area. Riprap shall be placed to its full course thickness in one operation and in such manner as to avoid displacing the filter material. The larger stones shall be well distributed and the entire mass of stones in their final position shall be graded to conform to the gradation specified in 3.3.1 above. The finished riprap shall be free from objectionable pockets of small stones and clusters of larger stones. Placing riprap in layers will not be permitted. Placing riprap by dumping it at the top of the slope and pushing it down the slope will not be permitted. The desired distribution of the various sizes of stones throughout the mass shall be obtained by selective loading of the material at the quarry or other source; by controlled dumping of successive loads during final placing; or by other methods of placement which will produce the specified results. Rearranging of individual stones by mechanical equipment or by hand will be required to the extent necessary to obtain a

reasonably well-graded distribution of stone sizes as specified above. The Contractor shall maintain the riprap until accepted and any material displaced prior to acceptance and due to the Contractor's negligence shall be replaced at his expense and to the lines and grades indicated on the contract drawings.

-- End of Section --

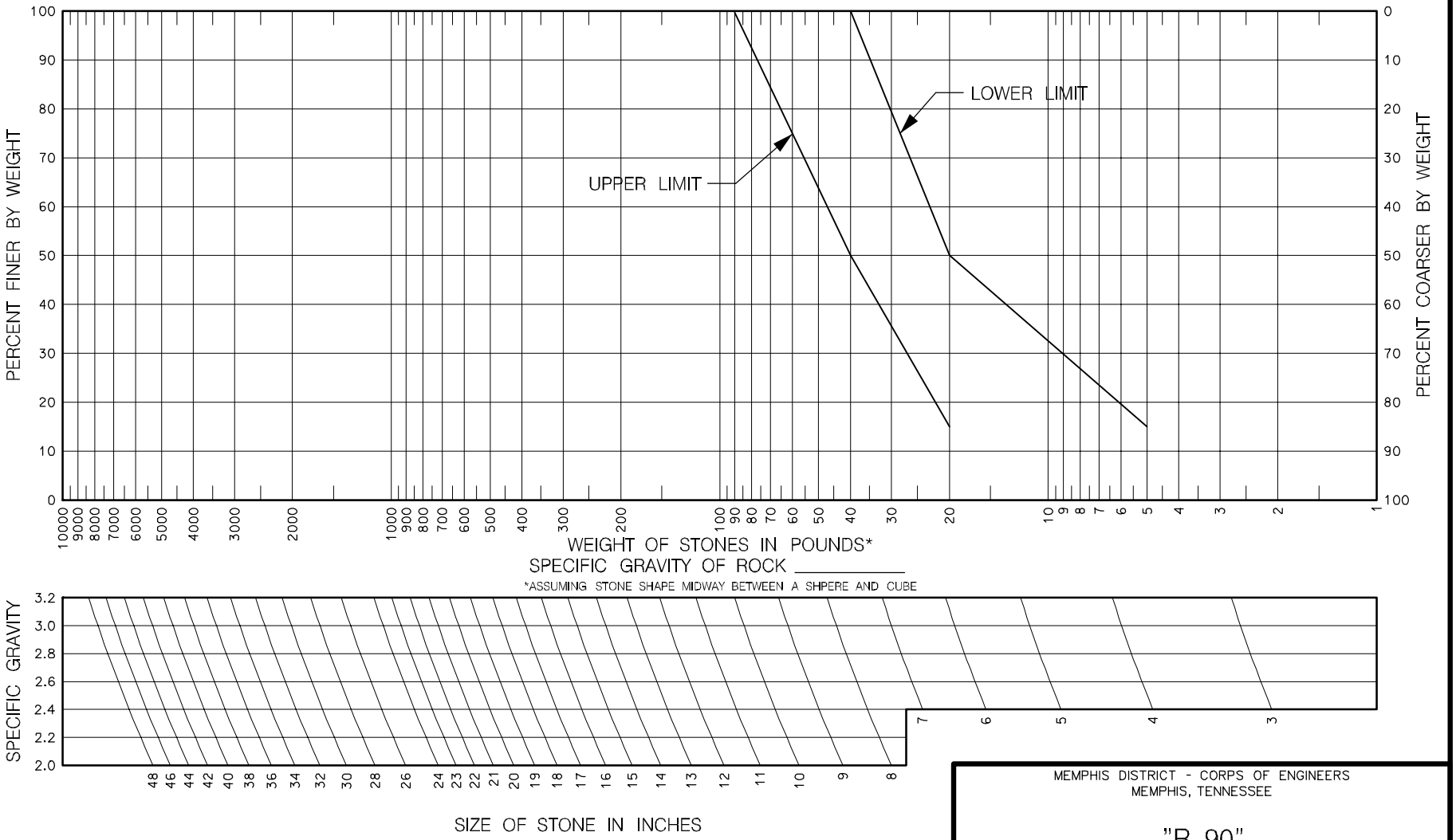

MEMPHIS DISTRICT - CORPS OF ENGINEERS
MEMPHIS, TENNESSEE

"R–90"

PROJECT: _____ DATE: _____

RIPRAP GRADATION CURVES

PLATE I

LMVD STANDARD TEST METHOD FOR GRADATION

A. Select a representative sample (Note #1), weigh and dump on hard stand.

B. Select specific sizes (see example) on which to run "individual weight larger than" test. (See Note #2). Procedure is similar to the standard aggregate gradation test for "individual weight retained".

C. Determine the largest size stone in the sample. (100% size)

D. Separate by "size larger than" the selected weights, starting with the larger sizes. Use reference stones, identified weights, for visual comparison in separating the obviously "larger than" stone. Stones that appear close to the specific weight must be individually weighed to determine size grouping. Weigh each size group, either individually or cumulatively.

E. Paragraph D above will result in "individual weight retained" figures. Calculate individual percent retained (heavier than) and cumulative percent retained and cumulative percent passing (lighter than). Plot percent passing, along with the specification curve on ENG Form 4055.

NOTES

1. Sample Selection. The most important part of the test and the least precise is the selection of a representative sample. No "standard" can be devised; larger quarry run stone is best sampled at the shot or muck pile by given direction to the loader; small graded riprap is best sampled by random selection from the transporting vehicles. If possible, all parties should take part in the sample selection and agree before the sample is run that the sample is representative.

2. Selection of Size for Separation. It is quite possible and accurate to run a gradation using any convenient sizes for the separation, without reference to the specifications. After the test is plotted on a curve, then the gradation limits may be plotted. Overlapping gradations with this method are no problem. It is usually more convenient, however, to select points from the gradation limits, such as the minimum 50% size, the minimum 15% size, and one or two others as separation points.

E X A M P L E G R A D A T I O N - S P E C I F I C A T I O N S

Stone Weight in Lbs.	Percent Finer by Weight
90 - 40	100
40 - 20	50
20 - 5	15

E X A M P L E G R A D A T I O N - W O R K S H E E T

Stone Size (lbs)	Weight Retained	Individual % Retained	Cumulative % Ret.	Cumulative % Pass	Specification % Finer by wt
90	0	0	-	100	
40	9600	30	30	70	100
20	11200	35	65	35	50
5	8000	25	90	10	15
< 5	3200	10	100	-	
Total Weight	32000lbs				

Remarks: LARGEST STONE SIZE = 78 LBS

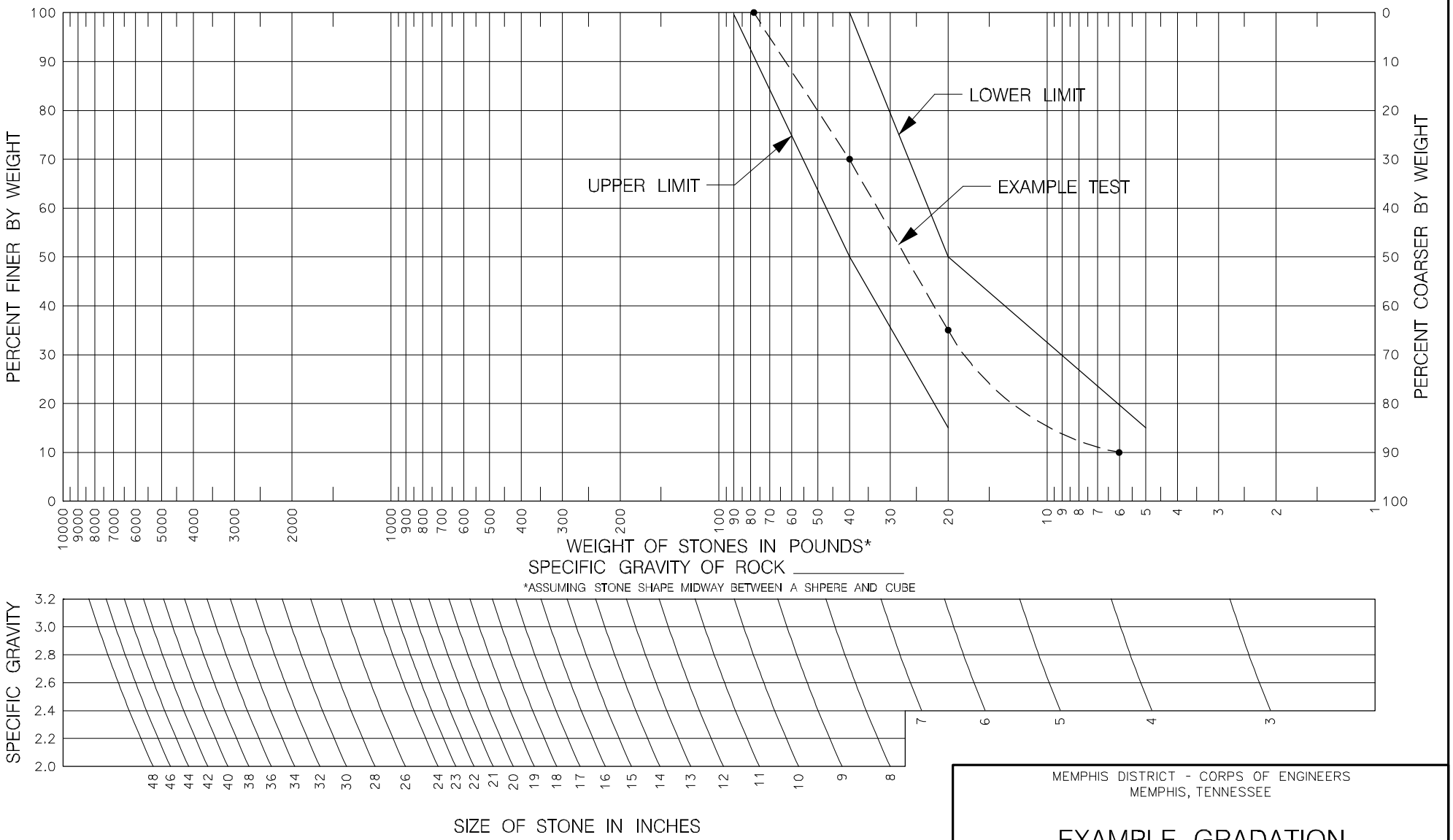

MEMPHIS DISTRICT - CORPS OF ENGINEERS
MEMPHIS, TENNESSEE

EXAMPLE GRADATION

PROJECT: _____ DATE: _____

RIPRAP GRADATION CURVES

PLATE IV

G R A D A T I O N T E S T D A T A S H E E T

Quarry _____ Stone Tested _____

Date of Test _____ Testing Rate _____

T E S T R E P R E S E N T S

Contract No.	District	Tons
	TOTAL	

G R A D A T I O N

Stone Size (lbs)	Weight Retained	Individual % Retained	Cumulative % Ret.	Cumulative % Pass	Specification % Finer by wt
Total Weight					

Remarks:_____

I Certify that the above stone sample is representative of the total tonnage covered by this test report.

Contractor Representative _____

Government Representative _____

-- End of Section --

DIVISION 2 - SITE WORK

SECTION 02700

CULVERT REMOVAL AND INSTALLATION

TABLE OF CONTENTS

PART 1 GENERAL
- 1.1 SCOPE
- 1.2 QUALITY CONTROL
- 1.3 APPLICABLE PUBLICATION

PART 2 PRODUCTS
- 2.1 GENERAL
- 2.2 FLARED END SECTIONS

PART 3 EXECUTION
- 3.1 REMOVAL OF EXISTING CULVERTS
- 3.2 INSTALLATION OF CULVERT PIPE AND FLARED END SECTIONS
- 3.3 BACKFILL
  - 3.3.1 General
  - 3.3.2 Compacted Backfill
  - 3.3.3 Semicompacted Backfill
- 3.4 FILTER MATERIAL AND RIPRAP AT THE CULVERTS

SECTION 02700

CULVERT REMOVAL AND INSTALLATION

PART 1 GENERAL

1.1 SCOPE

The work covered by this section consists of furnishing all labor, equipment, and materials, and performing all operations necessary for the removal and disposition of existing culverts, and for the installation of new corrugated metal pipe culverts and flared end sections, as indicated on the drawings, specified herein, and/or as directed.

1.2 QUALITY CONTROL

The Contractor shall establish and maintain quality control for the work specified in this section to assure compliance with contract requirements and maintain records of his quality control for all construction operations including; but, not limited to, the following:

(1) Materials

Review, prior to submittal, of certificates for compliance with specification requirements.

(2) Installation

Length, type, location, alignment, grade, slope, foundation bedding, coupling bands, repair of damaged areas.

(3) Backfill

Thickness of layers, maintenance of culvert alignment, compaction, elevation.

A copy of these records and tests, as well as the records of corrective action taken, shall be furnished the Government.

1.3 APPLICABLE PUBLICATION

The following publications of the issue listed below, but referred to thereafter by basic designation only, forms a part of this specification to the extent indicated by the reference thereto:

AMERICAN SOCIETY FOR TESTING AND MATERIALS (ASTM) PUBLICATIONS.

A 760/A760M	Corrugated Steel Pipe, Metallic-Coated for Sewers and Drains
A 849	Post Applied Coatings, Pavings, and Linings for Corrugated Steel Sewer and Drainage Pipe
D 698	Laboratory Compaction Characteristics of Soil using Standard Effort (12,400 ft-lbf/ft^3 (600 kN-m/m^3))
D 1556	Density and Unit Weight of Soil in Place by the Sand-Cone Method
D 2922	Density of Soil and Soil-Aggregate in Place by Nuclear Methods (Shallow Depth)

PART 2 PRODUCTS

2.1 GENERAL

The zinc-coated (Galvanized) corrugated metal pipe culvert shall conform to the requirements of ASTM A 760, for Type I and shall conform to the requirements of ASTM A 849 for fully coated with paved invert using Class A material. As an alternate, aluminum coated (Aluminized) corrugated metal pipe culverts may be used conforming to ASTM A 760, Type I with no bituminous coating or paved invert required. The manufacturer's certified statement as to quality will be accepted in lieu of performing the prescribed tests. The pipes shall be fabricated from 0.064 inches thick sheets. Coupling bands for joints may be 0.052 inches thick or heavier and shall be installed as recommended by the materials manufacturer except as specified herein. Coupling bands shall be coated as specified hereinabove for the pipe and shall have corrugations, not projections, that mesh with the pipe corrugations, and if helical corrugations are used, each length of helical pipe used shall have a minimum 12-inch length of annular corrugations at each end. All installation hardware shall be as recommended by the materials manufacturer.

2.2 FLARED END SECTIONS

The flared end sections shall be the pipe manufacturer's standard flared end section for use with the

specified pipe. Flared end sections shall be manufactured from galvanized sheet steel.

PART 3 EXECUTION

3.1 REMOVAL OF EXISTING CULVERTS

The existing culverts indicated on the drawings to be removed shall be removed from their present positions and disposed of by removal from the site. The Contractor shall perform such excavation as is necessary for removal of the culverts. Earth materials resulting from the excavation shall be stockpiled and subsequently used in the culvert backfill or shall be disposed of as specified in SECTION 02114, paragraph 3.4.

3.2 INSTALLATION OF CULVERT PIPE AND FLARED END SECTIONS

The culvert pipe length as shown on the drawings is approximate only. The exact length of the culvert will be determined in the field by the Contracting Officer and the Contractor will be notified of such length prior to installation. The pipe shall be placed at the location indicated on the drawings. Installation of the pipe shall be accomplished in the dry. The pipe shall be bedded on a smooth surface with invert elevation as determined in the field. Joints shall be carefully made by the material manufacturer's standard method, subject to the provisions of 2.1 above. Pipe shall be handled with care so that damage to the coating will be minimized. Coupling band rods if applicable and damaged areas of pipe shall be coated with an approved asphaltic cement prior to placement of backfill, and in case damaged areas are at joints, such areas shall be coated prior to making the joint. The Contractor shall perform such excavation as is necessary for installation of the culverts and the flared end sections. Excavated materials shall be utilized in the backfill or embankment or shall be disposed of as specified in Section 02114, paragraph 3.4.

3.3 BACKFILL

3.3.1 General

Backfill material shall be CLCH material as specified in the boring legend and it shall be placed around and over the culvert pipe to the line and grade indicated on the drawings and/or as directed by the Contracting Officer. Backfill material shall be obtained from the required excavations, and shall be free from roots, muck, brush and other objectionable matter. Material used within 2 feet of the pipe shall consist of cohesive material. The Contractor will be required, when directed, to remove any materials which the Contracting Officer considers to be objectionable in the backfill. Frozen material shall not be placed in the backfill nor shall material be placed upon frozen foundations. The suitability of each section of the foundation for placing materials thereon will be determined by the Contracting Officer.

3.3.2 Compacted Backfill

Backfill material within 2 feet of the pipe shall be placed concurrently on each side of the pipe in layers not more than 6 inches in thickness prior to compaction. In placing and compacting the material, care shall be taken to insure that the backfill is rammed tight against the pipe at all points. Compaction within 2 feet of culvert pipe shall be accomplished by the use of approved mechanical hand tampers. Each layer of backfill placed within 2 feet of the culverts shall be compacted to a density of at least 95 percent of the laboratory density obtained by the standard density test (ASTM D 698), Method D. The field density determination shall be by the Sand-Cone Method (ASTM D 1556) or by the Nuclear Method (ASTM D 2922). The moisture content after compaction shall be within the limits of 2 percentage points above optimum and 3 percentage points below optimum moisture content as determined by the Contracting Officer in accordance with ASTM D 698. The materials may require moistening or aerifying as necessary to provide the above specified moisture content. The Contractor will perform standard laboratory density tests as specified in ASTM D 698 for each type of material used in the fill to determine optimum water content and maximum densities. Tests shall be performed by an approved commercial testing laboratory or may be tested by facilities furnished by the Contractor. The Contractor shall perform field density and water content tests on each layer of material placed to assure that proper compaction is being achieved. The location where the Contractor is to take the field density and water content tests shall be as specified by the Contracting Officer. The Contracting Officer reserves the right to make quality assurance tests at the Governments Laboratory to verify Contractor test results. The cost of the assurance testing at the Government Laboratory will be at the Governments expense.

3.3.3 Semicompacted Backfill

The remaining culvert backfill shall be placed in layers not exceeding 12 inches in thickness prior to compaction and shall be semicompacted. Each layer shall be compacted by at least 3 passes of a crawler type tractor weighing not less than 20,000 pounds and exerting a unit tread pressure of not less than 6 pounds per square inch and operated at speeds not to exceed 3.5 miles per hour or by other approved compacting equipment which will attain comparable compaction. When in the opinion of the Contracting Officer, the surface of any layer is too smooth to bond properly with the succeeding layer, it shall be adequately scarified before the succeeding layer is placed. The layers shall be uniformly spread, distributed, and otherwise manipulated during placement to such an extent that individual loads of material deposited on the fill will not remain intact, and large, open voids in the fill will be eliminated.

3.4 FILTER MATERIAL AND RIPRAP AT THE CULVERTS

Filter material and riprap at the culverts shall be as shown on the drawings and shall be as specified in SECTION 02542 - STONE PROTECTION.

--End of Section--

DIVISION 2 - SITE WORK

SECTION 02935

ESTABLISHMENT OF TURF

TABLE OF CONTENTS

PART 1 GENERAL
1.1 SCOPE
1.2 QUALITY CONTROL
1.3 AREAS TO BE TREATED
1.4 CERTIFICATES AND SAMPLES
1.4.1 Fertilizer
1.4.2 Seed

PART 2 PRODUCTS
2.1 MATERIALS
2.1.1 Fertilizer
2.1.2 Seed
2.1.3 Soil for Repairs
2.2 CERTIFICATES AND SAMPLES
2.2.1 Fertilizer
2.2.2 Seed

PART 3 EXECUTION
3.1 COMMENCEMENT, PROSECUTION, AND COMPLETION
3.1.1 General
3.1.2 Sequence of Work
3.2 PREPARATION OF GROUND SURFACE
3.2.1 General
3.2.2 Clearing
3.2.3 Dressing
3.3 APPLICATION OF FERTILIZER
3.4 SEEDING
3.4.1 General
3.4.2 Broadcast Seeding
3.4.3 Damage to Seeding

3.5 COMPACTING
3.6 HYDRAULIC SLURRY METHOD

3.7 INSPECTION AND ACCEPTANCE
3.7.1 General
3.7.2 Areas Requiring Returfing

SECTION 02935

ESTABLISHMENT OF TURF

PART 1 GENERAL

1.1 SCOPE

The work provided for herein consists of furnishing all plant, labor, equipment, and materials, and performing all operations necessary for dressing, fertilizing, and turfing areas as specified herein and as indicated on the drawings. Fertilizing and/or seeding may be accomplished by aircraft or ground equipment at the option of the Contractor.

1.2 QUALITY CONTROL

The Contractor shall establish and maintain quality control for the work specified in this section to assure compliance with contract requirements and maintain records of his quality control for all construction operations including but not limited to the following:

(1) Preparation of Ground Surface. Location and quality of dressing, including necessary clearing, filling, or dressing out of washes, smoothness and uniformity of surfaces, and time of year.

(2) Fertilizing. Quality of materials, areas fertilized, quantity applied, and method of application.

(3) Seeding. Quality and type of seed, area covered, rate of application, quantity of seed used, and method of distribution.

A copy of these records and tests, as well as the records of corrective action taken, shall be furnished the Government.

1.3 AREAS TO BE TREATED

From approximate BL Stations 714+50 to 865+50 the combination of rough dressing, fertilizing, and seeding shall be performed on all surfaces of the excavated material embankment placed in the disposal area, upon surfaces of berm areas between the embankment and the top bank of the improved channel, and

any areas denuded of grass by construction and/or clearing operations.

1.4 CERTIFICATES AND SAMPLES

1.4.1 Fertilizer

Duplicate signed copies of invoices from suppliers shall be furnished. Invoices shall show quantities and percentage of nitrogen, phosphorous, and potash. Upon completion of the project, a final check of the total quantity of fertilizer used will be made against total area treated, and if minimum rates of application have not been met, an additional quantity of material sufficient to make up the minimum application rate shall be distributed as directed.

1.4.2 Seed

The Contracting Officer shall be furnished duplicate signed copies of statements certifying that each container of seed delivered is labeled in accordance with the Federal Seed Act and is at least equal to the requirements specified in 2.1.2 below. This certification shall be obtained from the supplier and shall be furnished on or with all copies of seed invoices.

PART 2 PRODUCTS

2.1 MATERIALS

2.1.1 Fertilizer

Fertilizer shall consist of a mixture containing nitrogen, phosphorous, and potash, and shall be uniform in composition and free-flowing. The fertilizer may be delivered to the site in bags or other convenient containers or delivered in bulk. If delivered in bags or containers, the fertilizer shall be fully labeled in accordance with the applicable fertilizer laws of the State of Arkansas and shall bear the name, tradename or trademark, and warranty of the producer. The fertilizer shall meet the requirements of the State of Arkansas for commercial fertilizer. Should the commercial fertilizer be furnished in bulk, the Contractor shall furnish certified weight tickets and a certified quantitative analysis report, in triplicate, from a recognized testing laboratory certifying the nutrient ratio of the materials. In the event the commercial mixture is delivered to the job site in the original containers, unopened, the analysis report will not be required.

2.1.2 Seed

Seed labeled in accordance with U.S. Department of Agriculture Rules and Regulations under the Federal Seed Act shall be furnished by the Contractor. Seed shall be furnished in sealed, standard containers unless

written exception is granted. Seed that is wet or moldy or that has been otherwise damaged in transit or storage will not be acceptable. The specifications for seeds shall conform to the following, unless otherwise approved by the Contracting Officer:

Kind of Seed	Minimum Purity Percent	Minimum Germination Percent
Rye Grass (Common Perennial)	95	80
Pensacola Bahia Grass	95	80
Bermuda Grass	95	80

2.1.3 Soil for Repairs

For fill of areas to be repaired, soil shall be of a quality at least equal to that which exists in areas adjacent to the area to be repaired. Soil used shall be free from roots, stones, and other materials that hinder grading, planting, and maintenance operations and shall be free from objectionable weed seeds and toxic substances.

2.2 CERTIFICATES AND SAMPLES

2.2.1 Fertilizer

Duplicate signed copies of invoices from suppliers shall be furnished. Invoices shall show quantities and percentage of nitrogen, phosphorous, and potash. Upon completion of the project, a final check of the total quantity of fertilizer used will be made against total area treated, and if minimum rates of application have not been met, an additional quantity of material sufficient to make up the minimum application rate shall be distributed as directed.

2.2.2 Seed

The Contracting Officer shall be furnished duplicate signed copies of statements certifying that each container of seed delivered is labeled in accordance with the Federal Seed Act and is at least equal to the requirements specified in 2.1.2 above. This certification shall be obtained from the supplier and shall be furnished on or with all copies of seed invoices.

PART 3 EXECUTION

3.1 COMMENCEMENT, PROSECUTION, AND COMPLETION

3.1.1 General

Preparation of the ground surface, fertilizing, and turfing operations shall be accomplished during the season between 1 March and 31 May, inclusive, and 15 August and 15 November, inclusive, unless otherwise authorized by the Contracting Officer.

3.1.2 Sequence of Work

The sequence of operations for work prescribed in this section shall be as follows:

(1) Preparation of ground surface.

(2) Fertilizing.

(3) Seeding.

(4) Compacting, where applicable.

3.2 PREPARATION OF GROUND SURFACE

3.2.1 General

Equipment, in good condition, shall be provided for the proper preparation of the ground and for handling and placing all materials. Equipment shall be approved by the Contracting Officer before work is started.

3.2.2 Clearing

Prior to grading and rough dressing, vegetation that may interfere with turfing operations shall be removed and shall be disposed of as specified in SECTION 02210, Paragraph 3.2. The surface shall be cleared of roots, cable, wire, and other materials that might hinder the work or subsequent maintenance.

3.2.3 Dressing

Surfaces where the combination of rough dressing, fertilizing, and seeding is required as specified in 1.3 above shall be prepared for fertilizing and seeding by dressing so as to produce smooth profiles, crown

widths, and end slopes.

3.3 APPLICATION OF FERTILIZER

Fertilizer shall be distributed uniformly over the areas to be seeded at a rate which will supply not less than 40 pounds of available nitrogen, 40 pounds of available phosphorous, and 40 pounds of potash per acre. Fertilizer distributed over the surfaces within where the combination of rough dressing, fertilizing, and seeding is required as specified in 1.3 above shall be incorporated into the soil by light disking, harrowing, or other acceptable methods immediately following the application.

3.4 SEEDING

3.4.1 General

Seed sown during the season between 1 March and 31 May, inclusive, shall consist of 15 pounds of Rye Grass, 15 pounds of Pensacola Bahia Grass, 40 pounds of hulled Bermuda grass, and 25 pounds of Sericea Lespedeza (Scarified) seed per acre. Seed sown during the season between 15 August and 15 November, inclusive, shall consist of 25 pounds of Rye Grass, 15 pounds of Pensacola Bahia Grass, 40 pounds of Sericea Lespedeza, and 40 pounds of unhulled Bermuda seed per acre. A satisfactory method of sowing shall be employed, using approved mechanical power-drawn seeders, mechanical hand-seeders, broadcast-seeders, or other approved methods. When conditions are such by reason of drought, high winds, excessive moisture, or other factors that satisfactory results are not likely to be obtained, work shall be halted as directed and resumed only when conditions are favorable or when approved alternative or corrective measures and procedures have been effected. If inspection either during seeding operations or after there is a show of green indicates that areas have been left unplanted, additional seed shall be sown if so directed.

3.4.2 Broadcast Seeding

Seed shall be broadcast with approved sowing equipment and distributed uniformly over the areas. Seed shall be covered lightly by brush harrow, spike-tooth harrow, chain harrow, cultipacker, or other approved device. Seed shall not be broadcast during windy weather.

3.4.3 Damage to Seeding

The Contractor shall be fully responsible for any damage to the seeded areas caused by his operations. Areas that become damaged as a result of poor workmanship or failure to meet the requirements of the specifications may be ordered to be repaired and reseeded to specification requirements, without additional cost to the Government.

3.5 COMPACTING

Immediately after seeding operations have been completed upon the surfaces where the combination of rough dressing, fertilizing, and seeding is required as specified in 1.3 above, such surfaces shall be compacted by one pass of a cultipacker, corrugated roller, or other approved equipment weighing 100 to 160 pounds per linear foot of roller. The roller shall be operated parallel to the centerline of the channel.

3.6 HYDRAULIC SLURRY METHOD

In lieu of spreading fertilizer, sowing seed, and compacting as specified hereinabove, the hydraulic slurry method of fertilizing, and seeding or any combination thereof, may be used by the Contractor.

3.7 INSPECTION AND ACCEPTANCE

3.7.1 General

Acceptance of the turfed areas will be determined by visual inspection. Existence of rainwash damage or dead and dying turf will not be acceptable.

3.7.2 Areas Requiring Returfing

Areas being inspected for completion that do not meet the requirements for completion as specified hereinabove shall be returfed at no additional cost to the Government.

--End of Section –

DIVISION 3 - CONCRETE

THRU

DIVISION 16 - ELECTRICAL

(NOT USED)