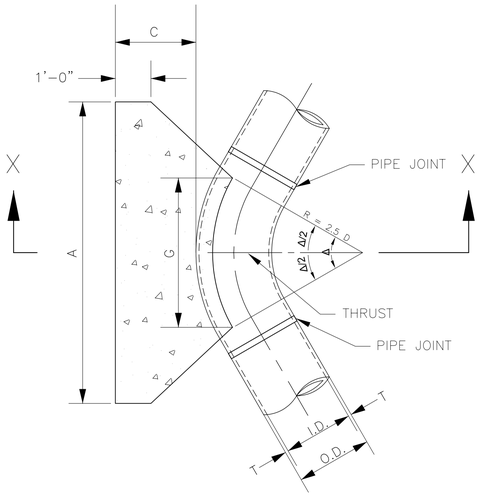

PLAN VIEW

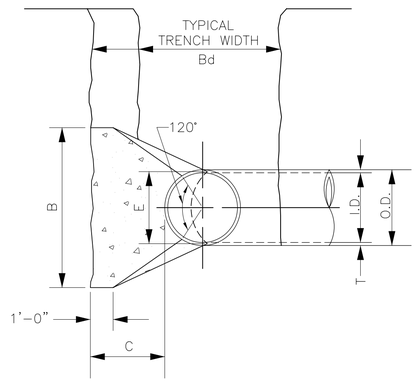

SECTION X–X

NOTES:

1. CONCRETE BLOCKING SHALL BE 3000 PSI (28 DAY).

2. POUR CONCRETE FOR BLOCK AGAINST UNDISTURBED EARTH.

3. DIMENSIONS MAY BE VARIED AS REQUIRED BY FIELD CONDITIONS WHERE AND AS DIRECTED BY THE CONTRACTING OFFICER. THE VOLUME OF CONCRETE BLOCKING SHALL NOT BE LESS THAN SHOWN HERE.

4. USE POLYETHYLENE WRAP OR EQUAL BETWEEN CONCRETE AND BEND TO PREVENT THE CONCRETE FROM STICKING.

5. CONCRETE SHALL NOT EXTEND BEYOND JOINTS.

	24" PIPE (I.D.)						
BENDS	A	B	C	E	G	VOLUME (cu.ft.)	VOLUME (cu.yd.)
11.25°	4'	2'6"	2'	2'2"	1'6"	20.8	0.77
22.5°	6'	3'	2'	2'2"	1'6"	36.7	1.36
45°	7'	5'	2'	2'2"	1'6"	70.2	2.60
90°	11'	6'	2'	2'2"	2'6"	133.1	4.93

NOTE: VALUES IN TABLE ARE BASED ON 1000 PSF SOIL BEARING STRENGTH AND A PIPELINE PRESSURE OF 100PSI.

HORIZONTAL THRUST BLOCK DETAIL — 1 TYP

NOT TO SCALE

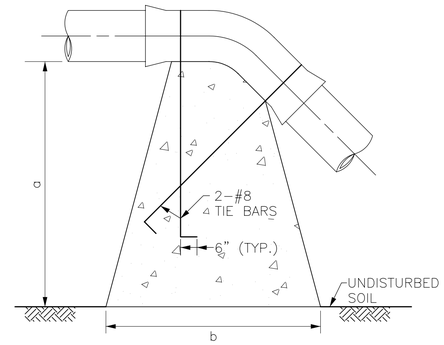

SECTION PARALLEL TO TRENCH

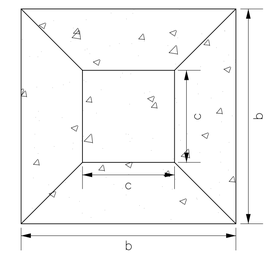

PLAN VIEW

	24" PIPE (I.D.)						
BENDS	a	b	c	AREA TOP (sq.ft.)	AREA BOTTOM (sq.ft.)	VOLUME (cu.ft.)	VOLUME (cu.yd.)
11.25°	1'6"	4'	2'6"	6.25	16	15	0.56
22.5°	3'6"	5'	3'	9	25	57	2.11
45°	6'4"	7'	4'	16	49	204	7.56

NOTE: VALUES IN TABLE ARE BASED ON 1000 PSF SOIL BEARING STRENGTH AND A PIPELINE PRESSURE OF 100PSI.

NOTES:

1. CONCRETE BLOCKING SHALL BE 3000 PSI (28 DAY).

2. POUR CONCRETE FOR BLOCK AGAINST UNDISTURBED EARTH.

3. DIMENSIONS MAY BE VARIED AS REQUIRED BY FIELD CONDITIONS WHERE AND AS DIRECTED BY THE CONTRACTING OFFICER. THE VOLUME OF CONCRETE BLOCKING SHALL NOT BE LESS THAN SHOWN HERE.

4. USE POLYETHYLENE WRAP OR EQUAL BETWEEN CONCRETE AND BEND TO PREVENT THE CONCRETE FROM STICKING.

5. CONCRETE SHALL NOT EXTEND BEYOND JOINTS.

GRAVITY THRUST BLOCK DETAIL — 2 TYP

NOT TO SCALE

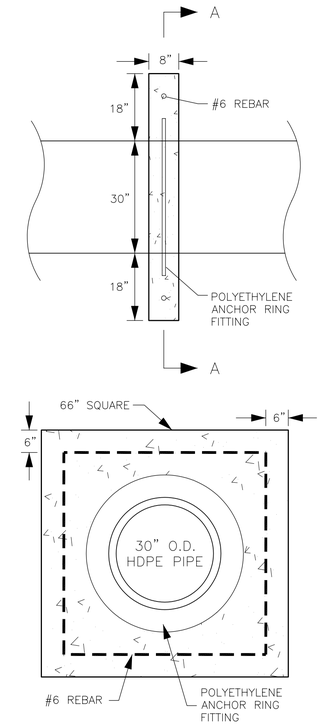

SECTION A–A

NOTE:
CONCRETE BLOCKING SHALL BE 3000 PSI (28 DAY).

HDPE THRUST BLOCK DETAIL — 2A TYP

NOT TO SCALE

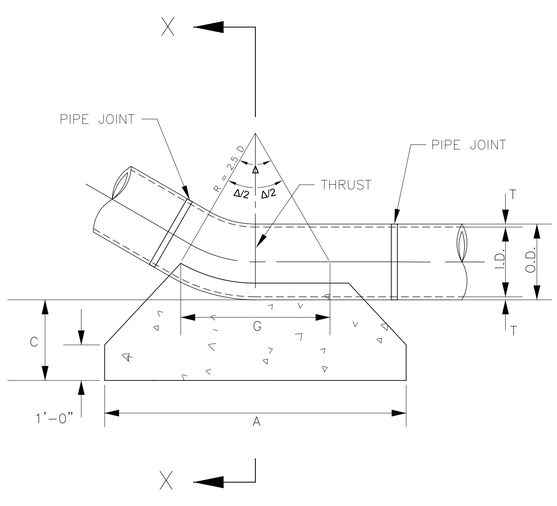

PLAN VIEW

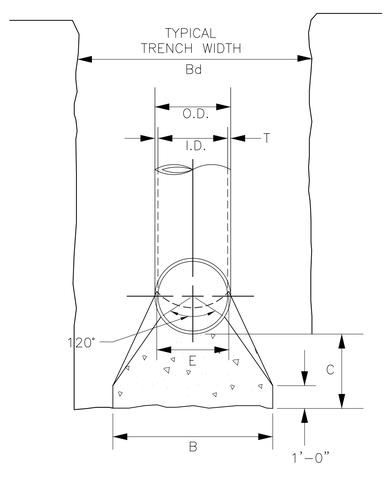

SECTION X–X

	24" PIPE (I.D.)						
BENDS	A	B	C	E	G	VOLUME (cu.ft.)	VOLUME (cu.yd.)
11.25°	4'	2'6"	2'	2'2"	1'6"	20.8	0.77
22.5°	6'	3'	2'	2'2"	1'6"	36.7	1.36
45°	7'	5'	2'	2'2"	1'6"	70.2	2.60
90°	11'	6'	2'	2'2"	2'6"	133.1	4.93

NOTE: VALUES IN TABLE ARE BASED ON 1000 PSF SOIL BEARING STRENGTH AND A PIPELINE PRESSURE OF 100PSI.

NOTES:

1. CONCRETE BLOCKING SHALL BE 3000 PSI (28 DAY).

2. POUR CONCRETE FOR BLOCK AGAINST UNDISTURBED EARTH.

3. DIMENSIONS MAY BE VARIED AS REQUIRED BY FIELD CONDITIONS WHERE AND AS DIRECTED BY THE CONTRACTING OFFICER. THE VOLUME OF CONCRETE BLOCKING SHALL NOT BE LESS THAN SHOWN HERE.

4. USE POLYETHYLENE WRAP OR EQUAL BETWEEN CONCRETE AND BEND TO PREVENT THE CONCRETE FROM STICKING.

5. CONCRETE SHALL NOT EXTEND BEYOND JOINTS.

VERTICAL THRUST BLOCK DETAIL — 3 TYP

NOT TO SCALE

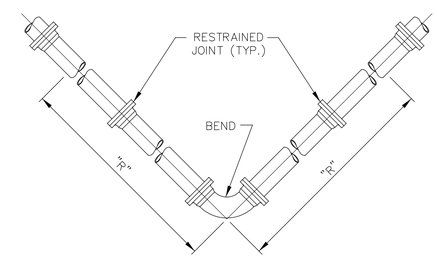

NOTES:

1. RESTRAINING MECHANISMS SHALL BE USED AT ALL BENDS.

2. THE LENGTH OF PIPE RESTRAINED ON EACH SIDE OF THE BEND SHALL NOT BE LESS THAN THE DISTANCES DEFINED IN THE SPECIFICATION ("R").

3. ALL JOINTS WITHIN THE DISTANCE ESTABLISHED IN THE SPECIFICATION ("R") SHALL BE RESTRAINED.

4. FOR RESTRAINT OF PVC AND DUCTILE IRON JOINTS ONLY. OTHER PIPE SHALL BE RESTRAINED PER MANUFACATURER'S RECOMMENDATIONS.

RESTRAINED JOINT DIAGRAM — 4 TYP

NOT TO SCALE

WAGGONER Engineering, Inc.

EAI / WEI, LLC
143-A LEFLEURS SQUARE
JACKSON, MISSISSIPPI 39211
PHONE: 601-355-9526
FAX: 601-352-3945

DESOTO COUNTY REGIONAL UTILITY AUTHORITY
LOWER CAMP CREEK FORCE MAIN
PHASE 1B, PROJECT 3
W912EQ-04-B-0002
DESOTO COUNTY, MISSISSIPPI

DRAWING REVISIONS		
NO.	REMARKS	DATE

SEAL:

DRAWN BY: BBW	SCALE: NOT TO SCALE
DESIGNED BY: BBW/TMH	DATE: 07/10/03
CHECKED BY: TMH	PROJECT: D00064
DWG NAME:	

DRAWING TITLE:

STANDARD DETAILS

SHEET NUMBER:

C2.00