SOLICITATION, OFFER, AND AWARD *(Construction, Alteration, or Repair)*	1. SOLICITATION NO. W912EQ-05-B-0001	2. TYPE OF SOLICITATION [X] SEALED BID (IFB) [ ] NEGOTIATED *(RFP)*	3. DATE ISSUED 25-Jan-2005	PAGE OF PAGES 1 OF 131

IMPORTANT - The "offer" section on the reverse must be fully completed by offeror.

4. CONTRACT NO.	5. REQUISITION/PURCHASE REQUEST NO. W38XGR-4323-9193	6. PROJECT NO.

7. ISSUED BY CODE W912EQ	8. ADDRESS OFFER TO *(If Other Than Item 7)* CODE
US ARMY ENGINEER DISTRICT, MEMPHIS 167 N MAIN STREET B202 MEMPHIS TN 38103-1894 TEL: FAX:	**See Item 7** TEL: FAX:

9. FOR INFORMATION CALL:	A. NAME	B. TELEPHONE NO. *(Include area code)* *(NO COLLECT CALLS)*
	PRISCILLA G SWEENEY	(901) 544-0770

SOLICITATION

NOTE: In sealed bid solicitations "offer" and "offeror" mean "bid" and "bidder".

10. THE GOVERNMENT REQUIRES PERFORMANCE OF THE WORK DESCRIBED IN THESE DOCUMENTS*(Title, identifying no., date):*

THIS IS A COMPETITIVE 8(A) SOLICITATION. DESC: This work consists of 75 relief wells, outlet ditch and collector ditches, riprap, culvert installation, establishment of turf, and environmental protection. The estimated cost of the proposed work is between $2,000,000.00 and $5,000,000.00. There are 17 sheets in the set of drawings. The proposed contract listed will be awarded under the Partnership Agreement between Small Business Administration requirement number for this project is 770-05-501075. There is a geographical restriction on this requirement. For this requirement it has been determined that competition will be limited to 8(a) firms located within the geographical area serviced by SBA in IL,KY,MO,TN, MS and AR or have an SBA certified bona fide place of business within any of the aforementioned states. The firms must have the above assigned NAICS code approved for 8(a) participation. All other firms are deemed ineligible to submit offers. The services or supplies to be procured in this solicitation are classified in Standard Industrial Classifiction (SIC) Code 1629, NAICS Code 237990. To qualify as a small business concern, the concern mut have had average annual receipts for the three preceding years not exceeding $28.5 million.

11. The Contractor shall begin performance within 10 calendar days and complete it within 270 calendar days after receiving [ ] award, [X] notice to proceed. This performance period is [X] mandatory, [ ] negotiable. *(See* 52.211-10 *.)*

12 A. THE CONTRACTOR MUST FURNISH ANY REQUIRED PERFORMANCE AND PAYMENT BONDS? *(If "YES," indicate within how many calendar days after award in Item 12B.)* [X] YES [ ] NO	12B. CALENDAR DAYS 10

13. ADDITIONAL SOLICITATION REQUIREMENTS:

A. Sealed offers in original and 0 copies to perform the work required are due at the place specified in Item 8 by 02:30 PM *(hour)* local time 24 Feb 2005 *(date)*. If this is a sealed bid solicitation, offers must be publicly opened at that time. Sealed envelopes containing offers shall be marked to show the offeror's name and address, the solicitation number, and the date and time offers are due.

B. An offer guarantee [X] is, [ ] is not required.

C. All offers are subject to the (1) work requirements, and (2) other provisions and clauses incorporated in the solicitation in full text or by reference.

D. Offers providing less than 60 calendar days for Government acceptance after the date offers are due will not be considered and will be rejected.

SOLICITATION, OFFER, AND AWARD (Continued)

(Construction, Alteration, or Repair)

OFFER ***(Must be fully completed by offeror)***

14. NAME AND ADDRESS OF OFFEROR *(Include ZIP Code)*		15. TELEPHONE NO. *(Include area code)*
		16. REMITTANCE ADDRESS *(Include only if different than Item 14)* **See Item 14**
CODE	FACILITY CODE	

17. The offeror agrees to perform the work required at the prices specified below in strict accordance with the terms of this solicitation, if this offer is accepted by the Government in writing within _____ calendar days after the date offers are due. *(Insert any number equal to or greater than the minimum requirements stated in Item 13D. Failure to insert any number means the offeror accepts the minimum in Item 13D.)*

AMOUNTS	SEE SCHEDULE OF PRICES

18. The offeror agrees to furnish any required performance and payment bonds.

19. ACKNOWLEDGMENT OF AMENDMENTS

(The offeror acknowledges receipt of amendments to the solicitation -- give number and date of each)

AMENDMENT NO.										
DATE										

20A. NAME AND TITLE OF PERSON AUTHORIZED TO SIGN OFFER *(Type or print)*	20B. SIGNATURE	20C. OFFER DATE

AWARD ***(To be completed by Government)***

21. ITEMS ACCEPTED:

22. AMOUNT	23. ACCOUNTING AND APPROPRIATION DATA

24. SUBMIT INVOICES TO ADDRESS SHOWN IN *(4 copies unless otherwise specified)*	**ITEM**	25. OTHER THAN FULL AND OPEN COMPETITION PURSUANT TO ☐ 10 U.S.C. 2304(c) ☐ 41 U.S.C. 253(c)
26. ADMINISTERED BY CODE		27. PAYMENT WILL BE MADE BY: CODE

CONTRACTING OFFICER WILL COMPLETE ITEM 28 OR 29 AS APPLICABLE

☐ 28. NEGOTIATED AGREEMENT *(Contractor is required to sign this document and return _____ copies to issuing office.)* Contractor agrees to furnish and deliver all items or perform all work, requisitions identified on this form and any continuation sheets for the consideration stated in this contract. The rights and obligations of the parties to this contract shall be governed by (a) this contract award, (b) the solicitation, and (c) the clauses, representations, certifications, and specifications or incorporated by reference in or attached to this contract.

☐ 29. AWARD *(Contractor is not required to sign this document.)* Your offer on this solicitation, is hereby accepted as to the items listed. This award consummates the contract, which consists of (a) the Government solicitation and your offer, and (b) this contract award. No further contractual document is necessary.

30A. NAME AND TITLE OF CONTRACTOR OR PERSON AUTHORIZED TO SIGN *(Type or print)*		31A. NAME OF CONTRACTING OFFICER *(Type or print)* TEL: EMAIL:
30B. SIGNATURE	30C. DATE	31B. UNITED STATES OF AMERICA BY 31C. AWARD DATE

Section Supplies or Services and Price

ITEM NO	SUPPLIES/SERVICES	QUANTITY	UNIT	UNIT PRICE	AMOUNT
0001	MOBILIZATION AND DEMOBILIZATION	1	Lump Sum		

NET AMT

Section 00010 - SOLICITATION CONTRACT FORM

ITEM NO	SUPPLIES/SERVICES	QUANTITY	UNIT	UNIT PRICE	AMOUNT
0002	CLEARING	1	Lump Sum		
				NET AMT	

ITEM NO	SUPPLIES/SERVICES	QUANTITY	UNIT	UNIT PRICE	AMOUNT
0003	EXCAVATION	37,500	Cubic Yard		
				NET AMT	

ITEM NO	SUPPLIES/SERVICES	QUANTITY	UNIT	UNIT PRICE	AMOUNT
0004	RELIEF WELLS 8"	1,775	Linear Foot		
				NET AMT	

ITEM NO	SUPPLIES/SERVICES	QUANTITY	UNIT	UNIT PRICE	AMOUNT
0005	RELIEF WELLS 10"	4,546	Linear Foot		
				NET AMT	

ITEM NO	SUPPLIES/SERVICES	QUANTITY	UNIT	UNIT PRICE	AMOUNT
0006	PUMPING TEST				
				NET AMT	

ITEM NO	SUPPLIES/SERVICES	QUANTITY	UNIT	UNIT PRICE	AMOUNT
0006AA	FIRST 150 HOURS	150	Hours		
				NET AMT	

ITEM NO	SUPPLIES/SERVICES	QUANTITY	UNIT	UNIT PRICE	AMOUNT
0006AB	ALL OVER 150 HOURS	45	Hours		
				NET AMT	

ITEM NO	SUPPLIES/SERVICES	QUANTITY	UNIT	UNIT PRICE	AMOUNT
0007	PILOT HOLE BORING	7,446	Linear Foot		
				NET AMT	

ITEM NO	SUPPLIES/SERVICES	QUANTITY	UNIT	UNIT PRICE	AMOUNT
0008	PIEZOMETERS	407	Linear Foot		
				NET AMT	

ITEM NO	SUPPLIES/SERVICES	QUANTITY	UNIT	UNIT PRICE	AMOUNT
0009	GUARD POSTS	261	Each		
				NET AMT	

ITEM NO	SUPPLIES/SERVICES	QUANTITY	UNIT	UNIT PRICE	AMOUNT
0010	RIPRAP "R-90"	9,535	Net Ton (2,000 LB)		
				NET AMT	

ITEM NO	SUPPLIES/SERVICES	QUANTITY	UNIT	UNIT PRICE	AMOUNT
0011	GEOTEXTILE	16,188	Square Yard		
				NET AMT	

ITEM NO	SUPPLIES/SERVICES	QUANTITY	UNIT	UNIT PRICE	AMOUNT
0012	AFFREGATE SURFACING	1	Lump Sum		
				NET AMT	

ITEM NO	SUPPLIES/SERVICES	QUANTITY	UNIT	UNIT PRICE	AMOUNT
0013		114	Linear Foot		
	CORRUGATED METAL PIPE, 24-INCH DIA				
				NET AMT	

ITEM NO	SUPPLIES/SERVICES	QUANTITY	UNIT	UNIT PRICE	AMOUNT
0014		88	Linear Foot		
	CORRUGATD METAL PIPE, 28X20 - INCH ARCH				
				NET AMT	

ITEM NO	SUPPLIES/SERVICES	QUANTITY	UNIT	UNIT PRICE	AMOUNT
0015		170	Linear Foot		
	CORRUGATED METAL PIPE, 42X29 - INCH ARCH				
				NET AMT	

ITEM NO	SUPPLIES/SERVICES	QUANTITY	UNIT	UNIT PRICE	AMOUNT
0016	CORRUGATED METAL PIPE, 48-INCH DIA	228	Linear Foot		
				NET AMT	

ITEM NO	SUPPLIES/SERVICES	QUANTITY	UNIT	UNIT PRICE	AMOUNT
0017	ESTABLISHMENT OF TURF	1	Lump Sum		
				NET AMT	

ITEM NO	SUPPLIES/SERVICES	QUANTITY	UNIT	UNIT PRICE	AMOUNT
0018	ENVIRONMENTAL PROTECTION	1	Lump Sum		
				NET AMT	

Section 00100 - INSTRUCTIONS TO BIDDERS

INSTRUCTIONS TO BIDDER
Section 00100 - Bidding Schedule/Instructions to Bidders

INSTRUCTIONS TO BIDDERS

INSTRUCTION TO BIDDERS

a. CONDITIONS AFFECTING THE WORK – Bidders should visit the site and take such other steps as may be reasonably necessary to ascertain the nature and location of the work and the general and local conditions that can affect the work or the cost thereof. Failure to do so will not relieve bidders from responsibility for estimating properly the difficulty or cost of successfully performing the work. The Government will assume no responsibility for any understanding or representations concerning conditions made by any of its officers or agents prior to the execution of the contract, unless included in the Invitation for Bids, the specifications or related documents.

b. SITE VISITS – Bidders should inspect the job site prior to submitting a bid. In this regard, bidders should note Contract Clause No. FAR 52.236-3 entitled "Site Investigation and Conditions Affecting the Work" located in Section 00700. Reference FAR 52.236-27 ALT I entitled "Site Visit (Construction)" in this Section 00100.

c. BIDDER'S QUALIFICATIONS – To establish its responsibility, the bidder may be requested by the Government to submit a statement regarding his previous experience in performing comparable work, his business and technical organization, financial resources, and plant available to be used in performing the work.

d. BIDDER'S ADDRESS – Prospective bidders should indicate in the offer, the address to which payment and/or correspondence should be mailed, if such address is different from that shown for the bidder. See Block 14 SF-1442.

e. MODIFICATIONS PRIOR TO DATE SET FOR OPENING BIDS – The right is reserved as the interest of the Government may require, to revise or amend the specifications or drawings or both prior to the date set for opening proposals. Such revisions and amendments, if any, will be announced by an amendment or amendments to this Invitation for Bids. If the revisions and amendments are of a nature which requires material changes in quantities or prices bid or both, the date set for opening bids may be postponed by such number of days as in the opinion of the issuing officer will enable bidders to revise their bids. In such cases, the amendment will include an announcement of the new date for opening bids.

f. BIDDING MATERIAL – Specifications, drawings and proposal forms can be obtained at no cost from Memphis District Corps of Engineers Contracting Home Page http://www.mvm.usace.army.mil or from Memphis District Corps of Engineers, Contracting, 167 N. Main Street B-202, Memphis, TN 38103-1894. Contractors are encouraged to use the Home Page to obtain solicitations and drawings.

g. NOTICE – The following bid information is applicable only if bid is over one hundred thousand dollars ($100,000):

(1) BID BONDS: This is applicable only if bid is over one hundred thousand dollars ($100,000). Each bidder shall submit with his bid a Bid Bond (Standard Form 24) with good and sufficient surety or sureties acceptable to the Government in the form of twenty percent (20%) of the bid price or three million dollars ($3,000,000) whichever is lesser. The bid bond penalty may be expressed in terms of a percentage or may be expressed in dollars and cents.

(2) PERFORMANCE BONDS. The penal amount of the performance bond shall equal one hundred percent (100%) of the contract. Bonds shall be received within ten (10) days after receipt of contract award.

(3) PAYMENT BONDS. Within ten (10) days after receipt of contract award to the bidder whom award is made, one (1) bond, with good and sufficient surety or sureties acceptable to the Government, shall be furnished; namely a Payment Bond (Standard Form 25A). The penal amount of such bonds shall be as follows:

The penal amount of payment bonds at the time of contract award shall be 100% of the original contract price.

h. EXPLANATION OF PROVISION/CLAUSE NUMBERS UTILIZED IN THIS SOLICITATION:

(1) Federal Acquisition Regulation (FAR) provisions/clauses are numbered as follows: 52.252-7.

(2) Defense Acquisition Regulation Supplement (DFARS) provisions/clauses are numbered as follows: 252.209-7000.

(3) Army Federal Acquisition Regulation Supplement (AFARS), provisions/clauses are numbered as follows: 52.252-9000.

(4) Where the sixth digit of a provision/clause number is a "5", this indicates a provision/clause from the Engineer Federal Acquisition Regulation Supplement (EFARS), provisions/clauses are numbered as follows: 52.249-5000.

i. REQUIRED CENTRAL CONTRACTOR REGISTRATION: Bidders are cautioned to read Contract Clause entitled "Required Central Contractor Registration" (252.204-7004) located in SECTION 00700.

k. BID DOCUMENTS:

The following documents must be submitted with your bid:

- SF 1442, Solicitation, Offer and Award
- Bid Schedule (Section 00010)
- Representations and Certifications (Section 00600)
- All amendments must be acknowledged
  Bid Bond (Standard Form 24)

CLAUSES INCORPORATED BY FULL TEXT

52.204-6 DATA UNIVERSAL NUMBERING SYSTEM (DUNS) NUMBER (OCT 2003)

(a) The offeror shall enter, in the block with its name and address on the cover page of its offer, the annotation "DUNS" or "DUNS+4" followed by the DUNS number or "DUNS+4" that identifies the offeror's name and address exactly as stated in the offer. The DUNS number is a nine-digit number assigned by Dun and Bradstreet, Inc. The DUNS+4 is the DUNS number plus a 4-character suffix that may be assigned at the discretion of the offeror to establish additional CCR records for identifying alternative Electronic Funds Transfer (EFT) accounts (see Subpart 32.11) for the same parent concern.

(b) If the offeror does not have a DUNS number, it should contact Dun and Bradstreet directly to obtain one.

(1) An offeror may obtain a DUNS number--

(i) If located within the United States, by calling Dun and Bradstreet at 1-866-705-5711 or via the Internet at http://www.dnb.com; or

(ii) If located outside the United States, by contacting the local Dun and Bradstreet office.

(2) The offeror should be prepared to provide the following information:

(i) Company legal business name.

(ii) Tradestyle, doing business, or other name by which your entity is commonly recognized.

(iii) Company physical street address, city, state and Zip Code.

(iv) Company mailing address, city, state and Zip Code (if separate from physical).

(v) Company telephone number.

(vi) Date the company was started.

(vii) Number of employees at your location.

(viii) Chief executive officer/key manager.

(ix) Line of business (industry).

(x) Company Headquarters name and address (reporting relationship within your entity).

(End of provision)

52.211-2 AVAILABILITY OF SPECIFICATIONS LISTED IN THE DOD INDEX OF SPECIFICATIONS AND STANDARDS (DODISS) AND DESCRIPTIONS LISTED IN THE ACQUISITION MANAGEMENT SYSTEMS AND DATA REQUIREMENTS CONTROL LIST, DOD 5010.12-L (DEC 2003)

Copies of specifications, standards, and data item descriptions cited in this solicitation may be obtained--

(a) From the ASSIST database via the Internet at http://assist.daps.dla.mil; or

(b) By submitting a request to the--Department of Defense Single Stock Point (DoDSSP), Building 4, Section D, 700 Robbins Avenue, Philadelphia, PA 19111-5094, Telephone (215) 697-2179, Facsimile (215) 697-1462.

(End of provision)

52.214-3 AMENDMENTS TO INVITATIONS FOR BIDS (DEC 1989)

(a) If this solicitation is amended, then all terms and conditions which are not modified remain unchanged.

(b) Bidders shall acknowledge receipt of any amendment to this solicitation (1) by signing and returning the

amendment, (2) by identifying the amendment number and date in the space provided for this purpose on the form for submitting a bid, (3) by letter or telegram, or (4) by facsimile, if facsimile bids are authorized in the solicitation. The Government must receive the acknowledgment by the time and at the place specified for receipt of bids.

(End of provision)

52.214-4 FALSE STATEMENTS IN BIDS (APR 1984)

Bidders must provide full, accurate, and complete information as required by this solicitation and its attachments. The penalty for making false statements in bids is prescribed in 18 U.S.C. 1001.

(End of provision)

52.214-5 SUBMISSION OF BIDS (MAR 1997)

(a) Bids and bid modifications shall be submitted in sealed envelopes or packages (unless submitted by electronic means) (1) addressed to the office specified in the solicitation, and (2) showing the time and date specified for receipt, the solicitation number, and the name and address of the bidder.

(b) Bidders using commercial carrier services shall ensure that the bid is addressed and marked on the outermost envelope or wrapper as prescribed in subparagraphs (a)(1) and (2) of this provision when delivered to the office specified in the solicitation.

(c) Telegraphic bids will not be considered unless authorized by the solicitation; however, bids may be modified or withdrawn by written or telegraphic notice.

(d) Facsimile bids, modifications, or withdrawals, will not be considered unless authorized by the solicitation.

(e) Bids submitted by electronic commerce shall be considered only if the electronic commerce method was specifically stipulated or permitted by the solicitation.

(End of provision)

52.214-6 EXPLANATION TO PROSPECTIVE BIDDERS (APR 1984)

Any prospective bidder desiring an explanation or interpretation of the solicitation, drawings, specifications, etc., must request it in writing soon enough to allow a reply to reach all prospective bidders before the submission of their bids. Oral explanations or instructions given before the award of a contract will not be binding. Any information given a prospective bidder concerning a solicitation will be furnished promptly to all other prospective bidders as an amendment to the solicitation, if that information is necessary in submitting bids or if the lack of it would be prejudicial to other prospective bidders.

(End of provision)

52.214-7 LATE SUBMISSIONS, MODIFICATIONS, AND WITHDRAWALS OF BIDS (NOV 1999)

(a) Bidders are responsible for submitting bids, and any modifications or withdrawals, so as to reach the Government office designated in the invitation for bids (IFB) by the time specified in the IFB. If no time is specified

in the IFB, the time for receipt is 4:30 p.m., local time, for the designated Government office on the date that bids are due.

(b)(1) Any bid, modification, or withdrawal received at the Government office designated in the IFB after the exact time specified for receipt of bids is “late” and will not be considered unless it is received before award is made, the Contracting Officer determines that accepting the late bid would not unduly delay the acquisition; and--

(i) If it was transmitted through an electronic commerce method authorized by the IFB, it was received at the initial point of entry to the Government infrastructure not later than 5:00 p.m. one working day prior to the date specified for receipt of bids; or

(ii) There is acceptable evidence to establish that it was received at the Government installation designated for receipt of bids and was under the Government's control prior to the time set for receipt of bids.

(2) However, a late modification of an otherwise successful bid that makes its terms more favorable to the Government, will be considered at any time it is received and may be accepted.

(c) Acceptable evidence to establish the time of receipt at the Government installation includes the time/date stamp of that installation on the bid wrapper, other documentary evidence of receipt maintained by the installation, or oral testimony or statements of Government personnel.

(d) If an emergency or unanticipated event interrupts normal Government processes so that bids cannot be received at the Government office designated for receipt of bids by the exact time specified in the IFB and urgent Government requirements preclude amendment of the IFB, the time specified for receipt of bids will be deemed to be extended to the same time of day specified in the solicitation on the first work day on which normal Government processes resume.

(e) Bids may be withdrawn by written notice received at any time before the exact time set for receipt of bids. If the IFB authorizes facsimile bids, bids may be withdrawn via facsimile received at any time before the exact time set for receipt of bids, subject to the conditions specified in the provision at 52.214-31, Facsimile Bids. A bid may be withdrawn in person by a bidder or its authorized representative if, before the exact time set for receipt of bids, the identity of the person requesting withdrawal is established and the person signs a receipt for the bid.

(End of provision)

52.214-18 PREPARATION OF BIDS--CONSTRUCTION (APR 1984)

(a) Bids must be (1) submitted on the forms furnished by the Government or on copies of those forms, and (2) manually signed. The person signing a bid must initial each erasure or change appearing on any bid form.

(b) The bid form may require bidders to submit bid prices for one or more items on various bases, including--

(1) Lump sum bidding;

(2) Alternate prices;

(3) Units of construction; or

(4) Any combination of subparagraphs (1) through (3) above.

(c) If the solicitation requires bidding on all items, failure to do so will disqualify the bid. If bidding on all items is not required, bidders should insert the words "no bid" in the space provided for any item on which no price is

submitted.

(d) Alternate bids will not be considered unless this solicitation authorizes their submission.

(End of provision)

52.214-19 CONTRACT AWARD--SEALED BIDDING--CONSTRUCTION (AUG 1996)

(a) The Government will evaluate bids in response to this solicitation without discussions and will award a contract to the responsible bidder whose bid, conforming to the solicitation, will be most advantageous to the Government, considering only price and the price-related factors specified elsewhere in the solicitation.

(b) The Government may reject any or all bids, and waive informalities or minor irregularities in bids received.

(c) The Government may accept any item or combination of items, unless doing so is precluded by a restrictive limitation in the solicitation or the bid.

(d) The Government may reject a bid as nonresponsive if the prices bid are materially unbalanced between line items or subline items. A bid is materially unbalanced when it is based on prices significantly less than cost for some work and prices which are significantly overstated in relation to cost for other work, and if there is a reasonable doubt that the bid will result in the lowest overall cost to the Government even though it may be the low evaluated bid, or if it is so unbalanced as to be tantamount to allowing an advance payment.

(End of provison)

52.214-34 SUBMISSION OF OFFERS IN THE ENGLISH LANGUAGE (APR 1991)

Offers submitted in response to this solicitation shall be in the English language. Offers received in other than English shall be rejected.

(End of provision)

52.214-35 SUBMISSION OF OFFERS IN U.S. CURRENCY (APR 1991)

Offers submitted in response to this solicitation shall be in terms of U.S. dollars. Offers received in other than U.S. dollars shall be rejected.

(End of provision)

52.214-5000 APPARENT CLERICAL MISTAKES (MAR 1995)--EFARS

(a) For the purpose of initial evaluations of bids, the following will be utilized in the resolving arithmetic discrepancies found on the face of bidding schedule as submitted by the bidder:

(1) Obviously misplaced decimal points will be corrected;
(2) Discrepancy between unit price and extended price, the unit price will govern;
(3) Apparent errors in extension of unit prices will be corrected;
(4) Apparent errors in addition of lump-sum and extended prices will be corrected.

(b) For the purpose of bid evaluation, the government will proceed on the assumption that the bidder intends his bid to be evaluated on basis of the unit prices, the totals arrived at by resolution of arithmetic discrepancies as provided above and the bid will be so reflected on the abstract of bids.

(c) These correction procedures shall not be used to resolve any ambiguity concerning which bid is low.

(End of statement)

52.216-1 TYPE OF CONTRACT (APR 1984)

The Government contemplates award of a FIRM FIXED PRICE CONSTRUCTION contract resulting from this solicitation.

(End of clause)

52.225-10 NOTICE OF BUY AMERICAN ACT REQUIREMENT--CONSTRUCTION MATERIALS (MAY 2002)

(a) Definitions. Construction material, domestic construction material, and foreign construction material, as used in this provision, are defined in the clause of this solicitation entitled “Buy American Act --Construction Materials” (Federal Acquisition Regulation (FAR) clause 52.225-9).

(b) Requests for determinations of inapplicability. An offeror requesting a determination regarding the inapplicability of the Buy American Act should submit the request to the Contracting Officer in time to allow a determination before submission of offers. The offeror shall include the information and applicable supporting data required by paragraphs (c) and (d) of the clause at FAR 52.225-9 in the request. If an offeror has not requested a determination regarding the inapplicability of the Buy American Act before submitting its offer, or has not received a response to a previous request, the offeror shall include the information and supporting data in the offer.

(c) Evaluation of offers. (1) The Government will evaluate an offer requesting exception to the requirements of the Buy American Act, based on claimed unreasonable cost of domestic construction material, by adding to the offered price the appropriate percentage of the cost of such foreign construction material, as specified in paragraph (b)(3)(i) of the clause at FAR 52.225-9.

(2) If evaluation results in a tie between an offeror that requested the substitution of foreign construction material based on unreasonable cost and an offeror that did not request an exception, the Contracting Officer will award to the offeror that did not request an exception based on unreasonable cost.

(d) Alternate offers.

(1) When an offer includes foreign construction material not listed by the Government in this solicitation in paragraph (b)(2) of the clause at FAR 52.225-9, the offeror also may submit an alternate offer based on use of equivalent domestic construction material.

(2) If an alternate offer is submitted, the offeror shall submit a separate Standard Form 1442 for the alternate offer, and a separate price comparison table prepared in accordance with paragraphs (c) and (d) of the clause at FAR 52.225-9 for the offer that is based on the use of any foreign construction material for which the Government has not yet determined an exception applies.

(3) If the Government determines that a particular exception requested in accordance with paragraph (c) of the clause at FAR 52.225-9 does not apply, the Government will evaluate only those offers based on use of the equivalent domestic construction material, and the offeror shall be required to furnish such domestic construction material. An offer based on use of the foreign construction material for which an exception was requested--

(i) Will be rejected as nonresponsive if this acquisition is conducted by sealed bidding; or

(ii) May be accepted if revised during negotiations.

(End of provision)

52.233-2 SERVICE OF PROTEST (AUG 1996)

(a) Protests, as defined in section 33.101 of the Federal Acquisition Regulation, that are filed directly with an agency, and copies of any protests that are filed with the General Accounting Office (GAO), shall be served on the Contracting Officer (addressed as follows) by obtaining written and dated acknowledgment of receipt from

Chief, Contracting Division
ATTN: CEMVM-CT-Rm. 681
US Army, Engineer District, Memphis
167 North Main Street, B202
Memphis, Tennessee 38103-1894

(b) The copy of any protest shall be received in the office designated above within one day of filing a protest with the GAO.

(End of provision)

52.236-27 SITE VISIT (CONSTRUCTION) (FEB 1995) – ALTERNATE I (FEB 1995)

(a) The clauses at 52.236-2, Differing Site Conditions, and 52.236-3, Site Investigations and Conditions Affecting the Work, will be included in any contract awarded as a result of this solicitation. Accordingly, offerors or quoters are urged and expected to inspect the site where the work will be performed.

(b) An organized site visit has been scheduled for--

1 Feb 2005 and 15 Feb 05

(c) Participants will meet at--

BIDDERS DESIRING A SITE VISIT SHALL CONTACT THE AREA ENGINEER AT LEAST ONE DAY PRIOR TO THE SCHEDULED SITE VISIT.

NAME: Stephen P. Shankle
Area Engineer

ADDRESS: Caruthersville Area Office
706 Harry S. Truman Boulevard
Caruthersville, Missouri 63830-1268

TELEPHONE: 901/544-3074 or 573/333-1043

COLLECT TELEPHONE CALLS WILL NOT BE ACCEPTED

(End of provision)

252.211-7001 AVAILABILITY OF SPECIFICATIONS AND STANDARDS NOT LISTED IN DODISS, DATA ITEM DESCRIPTIONS NOT LISTED IN DOD 5010.12-L, AND PLANS, DRAWINGS, AND OTHER PERTINENT DOCUMENTS. (DEC 1991)

Offerors may obtain the specifications, standards, plans, drawings, data item descriptions, and other pertinent documents cited in this solicitation by submitting a request to:

US Army Corps of Engineers
Attn: Priscilla Sweeney/Contract Specialist
Contracting/Construction Branch
167 N. Main St
Memphis, TN 38103

OR

Clicking on the hyperlink below

http://www.mvm.usace.army.mil/contracting/Ebs/AdvertisedSolicitations.asp

Include the number of the solicitation and the title and number of the specification, standard, plan, drawing, or other pertinent document.

W912EQ-05-B-0001 (Nash Relief Wells)

(End of Clause)

Section 00600 - REPRESENTATIONS AND CERTIFICATIONS

CLAUSES INCORPORATED BY REFERENCE

52.0-4031 CORPORATE CERTIFICATION OCT 1999

CLAUSES INCORPORATED BY FULL TEXT

52.203-2 CERTIFICATE OF INDEPENDENT PRICE DETERMINATION (APR 1985)

(a) The offeror certifies that --

(1) The prices in this offer have been arrived at independently, without, for the purpose of restricting competition, any consultation, communication, or agreement with any other offeror or competitor relating to –

(i) Those prices,

(ii) The intention to submit an offer, or

(iii) The methods of factors used to calculate the prices offered:

(2) The prices in this offer have not been and will not be knowingly disclosed by the offeror, directly or indirectly, to any other offeror or competitor before bid opening (in the case of a sealed bid solicitation) or contract award (in the case of a negotiated solicitation) unless otherwise required by law; and

(3) No attempt has been made or will be made by the offeror to induce any other concern to submit or not to submit an offer for the purpose of restricting competition.

(b) Each signature on the offer is considered to be a certification by the signatory that the signatory --

(1) Is the person in the offeror's organization responsible for determining the prices offered in this bid or proposal, and that the signatory has not participated and will not participate in any action contrary to subparagraphs (a)(1) through (a)(3) of this provision; or

(2) (i) Has been authorized, in writing, to act as agent for the following principals in certifying that those principals have not participated, and will not participate in any action contrary to subparagraphs (a)(1) through (a)(3) of this provison _____ (insert full name of person(s) in the offeror's organization responsible for determining the prices offered in this bid or proposal, and the title of his or her position in the offeror's organization);

(ii) As an authorized agent, does certify that the principals named in subdivision (b)(2)(i) above have not participated, and will not participate, in any action contrary to subparagraphs (a)(1) through (a)(3) above; and

(iii) As an agent, has not personally participated, and will not participate, in any action contrary to subparagraphs (a)(1) through (a)(3) of this provision.

(c) If the offeror deletes or modifies subparagraph (a)(2) of this provision, the offeror must furnish with its offer a signed statement setting forth in detail the circumstances of the disclosure.

(End of clause)

52.203-11 CERTIFICATION AND DISCLOSURE REGARDING PAYMENTS TO INFLUENCE CERTAIN FEDERAL TRANSACTIONS (APR 1991)

(a) The definitions and prohibitions contained in the clause, at FAR 52.203-12, Limitation on Payments to Influence Certain Federal Transactions, included in this solicitation, are hereby incorporated by reference in paragraph (b) of this Certification.

(b) The offeror, by signing its offer, hereby certifies to the best of his or her knowledge and belief that on or after December 23, 1989,--

(1) No Federal appropriated funds have been paid or will be paid to any person for influencing or attempting to influence an officer or employee of any agency, a Member of Congress, an officer or employee of Congress, or an employee of a Member of Congress on his or her behalf in connection with the awarding of any Federal contract, the making of any Federal grant, the making of any Federal loan, the entering into of any cooperative agreement, and the extension, continuation, renewal, amendment or modification of any Federal contract, grant, loan, or cooperative agreement;

(2) If any funds other than Federal appropriated funds (including profit or fee received under a covered Federal transaction) have been paid, or will be paid to any person for influencing or attempting to influence an officer or employee of any agency, a Member of Congress, an officer or employee of Congress or an employee of a Member of Congress on his or her behalf in connection with this solicitation, the offeror shall complete and submit, with its offer, OMB standard form LLL, Disclosure of Lobbying Activities, to the Contracting Officer; and

(3) He or she will include the language of this certification in all subcontract awards at any tier and require that all recipients of subcontract awards in excess of $100,000 shall certify and disclose accordingly.

(c) Submission of this certification and disclosure is a prerequisite for making or entering into this contract imposed by section 1352, title 31, United States Code. Any person who makes an expenditure prohibited under this provision, shall be subject to a civil penalty of not less than $10,000, and not more than $100,000, for each such failure.

(End of provision)

52.204-5 WOMEN-OWNED BUSINESS (OTHER THAN SMALL BUSINESS) (MAY 1999)

(a) Definition. Women-owned business concern, as used in this provision, means a concern that is at least 51 percent owned by one or more women; or in the case of any publicly owned business, at least 51 percent of its stock is owned by one or more women; and whose management and daily business operations are controlled by one or more women.

(b) Representation. [Complete only if the offeror is a women-owned business concern and has not represented itself as a small business concern in paragraph (b)(1) of FAR 52.219-1, Small Business Program Representations, of this solicitation.] The offeror represents that it ( ) is a women-owned business concern.

(End of provision)

52.209-5 CERTIFICATION REGARDING DEBARMENT, SUSPENSION, PROPOSED DEBARMENT, AND OTHER RESPONSIBILITY MATTERS (DEC 2001)

(a)(1) The Offeror certifies, to the best of its knowledge and belief, that-

(i) The Offeror and/or any of its Principals-

(A) Are ( ) are not ( ) presently debarred, suspended, proposed for debarment, or declared ineligible for the award of contracts by any Federal agency;

(B) Have ( ) have not ( ), within a three-year period preceding this offer, been convicted of or had a civil judgment rendered against them for: commission of fraud or a criminal offense in connection with obtaining, attempting to obtain, or performing a public (Federal, state, or local) contract or subcontract; violation of Federal or state antitrust statutes relating to the submission of offers; or commission of embezzlement, theft, forgery, bribery, falsification or destruction of records, making false statements, tax evasion, or receiving stolen property; and

(C) Are ( ) are not ( ) presently indicted for, or otherwise criminally or civilly charged by a governmental entity with, commission of any of the offenses enumerated in paragraph (a)(1)(i)(B) of this provision.

(ii) The Offeror has ( ) has not ( ), within a three-year period preceding this offer, had one or more contracts terminated for default by any Federal agency.

(2) "Principals," for the purposes of this certification, means officers; directors; owners; partners; and, persons having primary management or supervisory responsibilities within a business entity (e.g., general manager; plant manager; head of a subsidiary, division, or business segment, and similar positions).

This Certification Concerns a Matter Within the Jurisdiction of an Agency of the United States and the Making of a False, Fictitious, or Fraudulent Certification May Render the Maker Subject to Prosecution Under Section 1001, Title 18, United States Code.

(b) The Offeror shall provide immediate written notice to the Contracting Officer if, at any time prior to contract award, the Offeror learns that its certification was erroneous when submitted or has become erroneous by reason of changed circumstances.

(c) A certification that any of the items in paragraph (a) of this provision exists will not necessarily result in withholding of an award under this solicitation. However, the certification will be considered in connection with a determination of the Offeror's responsibility. Failure of the Offeror to furnish a certification or provide such additional information as requested by the Contracting Officer may render the Offeror nonresponsible.

(d) Nothing contained in the foregoing shall be construed to require establishment of a system of records in order to render, in good faith, the certification required by paragraph (a) of this provision. The knowledge and information of an Offeror is not required to exceed that which is normally possessed by a prudent person in the ordinary course of business dealings.

(e) The certification in paragraph (a) of this provision is a material representation of fact upon which reliance was placed when making award. If it is later determined that the Offeror knowingly rendered an erroneous certification, in addition to other remedies available to the Government, the Contracting Officer may terminate the contract resulting from this solicitation for default.

(End of provision)

52.219-1 SMALL BUSINESS PROGRAM REPRESENTATIONS (MAY 2004)

(a)(1) The North American Industry Classification System (NAICS) code for this acquisition is 237990

(2) The small business size standard is 28.5 million

(3) The small business size standard for a concern which submits an offer in its own name, other than on a construction or service contract, but which proposes to furnish a product which it did not itself manufacture, is 500 employees.

(b) Representations. (1) The offeror represents as part of its offer that it ( ) is, ( ) is not a small business concern.

(2) (Complete only if the offeror represented itself as a small business concern in paragraph (b)(1) of this provision.) The offeror represents, for general statistical purposes, that it ( ) is, ( ) is not a small disadvantaged business concern as defined in 13 CFR 124.1002.

(3) (Complete only if the offeror represented itself as a small business concern in paragraph (b)(1) of this provision.) The offeror represents as part of its offer that it ( ) is, ( ) is not a women-owned small business concern.

(4) (Complete only if the offeror represented itself as a small business concern in paragraph (b)(1) of this provision.) The offeror represents as part of its offer that it ( ) is, ( ) is not a veteran-owned small business concern.

(5) (Complete only if the offeror represented itself as a veteran-owned small business concern in paragraph (b)(4) of this provision.) The offeror represents as part of its offer that it ( ) is, ( ) is not a service-disabled veteran-owned small business concern.

(6) (Complete only if the offeror represented itself as a small business concern in paragraph (b)(1) of this provision.) The offeror represents, as part of its offer, that--

(i) It ( ) is, ( ) is not a HUBZone small business concern listed, on the date of this representation, on the List of Qualified HUBZone Small Business Concerns maintained by the Small Business Administration, and no material change in ownership and control, principal office, or HUBZone employee percentage has occurred since it was certified by the Small Business Administration in accordance with 13 CFR part 126; and

(ii) It ( ) is, ( ) is not a joint venture that complies with the requirements of 13 CFR part 126, and the representation in paragraph (b)(6)(i) of this provision is accurate for the HUBZone small business concern or concerns that are participating in the joint venture. (The offeror shall enter the name or names of the HUBZone small business concern or concerns that are participating in the joint venture:_____.) Each HUBZone small business concern participating in the joint venture shall submit a separate signed copy of the HUBZone representation.

(c) Definitions. As used in this provision--

Service-disabled veteran-owned small business concern--

(1) Means a small business concern--

(i) Not less than 51 percent of which is owned by one or more service-disabled veterans or, in the case of any publicly owned business, not less than 51 percent of the stock of which is owned by one or more service-disabled veterans; and

(ii) The management and daily business operations of which are controlled by one or more service-disabled veterans or, in the case of a service-disabled veteran with permanent and severe disability, the spouse or permanent caregiver of such veteran.

(2) Service-disabled veteran means a veteran, as defined in 38 U.S.C. 101(2), with a disability that is service-connected, as defined in 38 U.S.C. 101(16).

"Small business concern," means a concern, including its affiliates, that is independently owned and operated, not dominant in the field of operation in which it is bidding on Government contracts, and qualified as a small business under the criteria in 13 CFR Part 121 and the size standard in paragraph (a) of this provision.

Veteran-owned small business concern means a small business concern--

(1) Not less than 51 percent of which is owned by one or more veterans (as defined at 38 U.S.C. 101(2)) or, in the case of any publicly owned business, not less than 51 percent of the stock of which is owned by one or more veterans; and

(2) The management and daily business operations of which are controlled by one or more veterans.

"Women-owned small business concern," means a small business concern --

(1) That is at least 51 percent owned by one or more women; in the case of any publicly owned business, at least 51 percent of the stock of which is owned by one or more women; and

(2) Whose management and daily business operations are controlled by one or more women.

(d) Notice.

(1) If this solicitation is for supplies and has been set aside, in whole or in part, for small business concerns, then the clause in this solicitation providing notice of the set-aside contains restrictions on the source of the end items to be furnished.

(2) Under 15 U.S.C. 645(d), any person who misrepresents a firm's status as a small, HUBZone small, small disadvantaged, or women-owned small business concern in order to obtain a contract to be awarded under the preference programs established pursuant to section 8(a), 8(d), 9, or 15 of the Small Business Act or any other provision of Federal law that specifically references section 8(d) for a definition of program eligibility, shall--

(i) Be punished by imposition of fine, imprisonment, or both;

(ii) Be subject to administrative remedies, including suspension and debarment; and

(iii) Be ineligible for participation in programs conducted under the authority of the Act.

(End of provision)

52.219-2 EQUAL LOW BIDS. (OCT 1995)

(a) This provision applies to small business concerns only.

(b) The bidder's status as a labor surplus area (LSA) concern may affect entitlement to award in case of tie bids. If the bidder wishes to be considered for this priority, the bidder must identify, in the following space, the LSA in which the costs to be incurred on account of manufacturing or production (by the bidder or the first-tier subcontractors) amount to more than 50 percent of the contract price.

_____

_____

(c) Failure to identify the labor surplus area as specified in paragraph (b) of this provision will preclude the bidder from receiving priority consideration. If the bidder is awarded a contract as a result of receiving priority

consideration under this provision and would not have otherwise received award, the bidder shall perform the contract or cause the contract to be performed in accordance with the obligations of an LSA concern.

52.222-22 PREVIOUS CONTRACTS AND COMPLIANCE REPORTS (FEB 1999)

The offeror represents that --

(a) ( ) It has, ( ) has not participated in a previous contract or subcontract subject to the Equal Opportunity clause of this solicitation;

(b) ( ) It has, ( ) has not, filed all required compliance reports; and

(c) Representations indicating submission of required compliance reports, signed by proposed subcontractors, will be obtained before subcontract awards.

(End of provision)

52.222-38 COMPLIANCE WITH VETERANS' EMPLOYMENT REPORTING REQUIREMENTS (DEC 2001)

By submission of its offer, the offeror represents that, if it is subject to the reporting requirements of 38 U.S.C. 4212(d) (i.e., if it has any contract containing Federal Acquisition Regulation clause 52.222-37, Employment Reports on Special Disabled Veterans, Veterans of the Vietnam Era, and Other Eligible Veterans), it has submitted the most recent VETS-100 Report required by that clause.

(End of provision)

52.223-13 CERTIFICATION OF TOXIC CHEMICAL RELEASE REPORTING (AUG 2003)

(a) Executive Order 13148, of April 21, 2000, Greening the Government through Leadership in Environmental Management, requires submission of this certification as a prerequisite for contract award.

(b) By signing this offer, the offeror certifies that--

(1) As the owner or operator of facilities that will be used in the performance of this contract that are subject to the filing and reporting requirements described in section 313 of the Emergency Planning and Community Right-to-Know Act of 1986 (EPCRA) (42 U.S.C. 11023) and section 6607 of the Pollution Prevention Act of 1990 (PPA) (42 U.S.C. 13106), the offeror will file and continue to file for such facilities for the life of the contract the Toxic Chemical Release Inventory Form (Form R) as described in sections 313(a) and (g) of EPCRA and section 6607 of PPA; or

(2) None of its owned or operated facilities to be used in the performance of this contract is subject to the Form R filing and reporting requirements because each such facility is exempt for at least one of the following reasons: (Check each block that is applicable.)

( ) (i) The facility does not manufacture, process, or otherwise use any toxic chemicals listed in 40 CFR 372.65;

( ) (ii) The facility does not have 10 or more full-time employees as specified in section 313.(b)(1)(A) of EPCRA 42 U.S.C. 11023(b)(1)(A);

( ) (iii) The facility does not meet the reporting thresholds of toxic chemicals established under section 313(f) of EPCRA, 42 U.S.C. 11023(f) (including the alternate thresholds at 40 CFR 372.27, provided an appropriate certification form has been filed with EPA);

( ) (iv) The facility does not fall within the following Standard Industrial Classification (SIC) codes or their corresponding North American Industry Classification System sectors:

(A) Major group code 10 (except 1011, 1081, and 1094.

(B) Major group code 12 (except 1241).

(C) Major group codes 20 through 39.

(D) Industry code 4911, 4931, or 4939 (limited to facilities that combust coal and/or oil for the purpose of generating power for distribution in commerce).

(E) Industry code 4953 (limited to facilities regulated under the Resource Conservation and Recovery Act, Subtitle C (42 U.S.C. 6921, et seq.), 5169, 5171, or 7389 (limited to facilities primarily engaged in solvent recovery services on a contract or fee basis); or

( ) (v) The facility is not located within the United States or its outlying areas.

(End of clause)

252.209-7001 DISCLOSURE OF OWNERSHIP OR CONTROL BY THE GOVERNMENT OF A TERRORIST COUNTRY (SEP 2004)

(a) "Definitions."

As used in this provision --

(a) "Government of a terrorist country" includes the state and the government of a terrorist country, as well as any political subdivision, agency, or instrumentality thereof.

(2) "Terrorist country" means a country determined by the Secretary of State, under section 6(j)(1)(A) of the Export Administration Act of 1979 (50 U.S.C. App. 2405(j)(i)(A)), to be a country the government of which has repeatedly provided support for such acts of international terrorism. As of the date of this provision, terrorist countries subject to this provision include: Cuba, Iran, Libya, North Korea, Sudan, and Syria.

(3) "Significant interest" means --

(i) Ownership of or beneficial interest in 5 percent or more of the firm's or subsidiary's securities. Beneficial interest includes holding 5 percent or more of any class of the firm's securities in "nominee shares," "street names," or some other method of holding securities that does not disclose the beneficial owner;

(ii) Holding a management position in the firm, such as a director or officer;

(iii) Ability to control or influence the election, appointment, or tenure of directors or officers in the firm;

(iv) Ownership of 10 percent or more of the assets of a firm such as equipment, buildings, real estate, or other tangible assets of the firm; or

(v) Holding 50 percent or more of the indebtness of a firm.

(b) "Prohibition on award."

In accordance with 10 U.S.C. 2327, no contract may be awarded to a firm or a subsidiary of a firm if the government of a terrorist country has a significant interest in the firm or subsidiary or, in the case of a subsidiary, the firm that owns the subsidiary, unless a waiver is granted by the Secretary of Defense.

(c) "Disclosure."

If the government of a terrorist country has a significant interest in the Offeror or a subsidiary of the Offeror, the Offeror shall disclosure such interest in an attachment to its offer. If the Offeror is a subsidiary, it shall also disclose any significant interest the government of a terrorist country has in any firm that owns or controls the subsidiary. The disclosure shall include --

(1) Identification of each government holding a significant interest; and

(2) A description of the significant interest held by each government.

(End of provision)

252.209-7002 DISCLOSURE OF OWNERSHIP OR CONTROL BY A FOREIGN GOVERNMENT (SEP 1994)

(a) Definitions. As used in this provision--

(1) "Entity controlled by a foreign government" means--

(i) Any domestic or foreign organization or corporation that is effectively owned or controlled by a foreign government; or

(ii) Any individual acting on behalf of a foreign government.

(2) "Effectively owned or controlled" means that a foreign government or any entity controlled by a foreign government has the power, either directly or indirectly, whether exercised or exercisable, to control or influence the election or appointment of the Offeror's officers, directors, partners, regents, trustees, or a majority of the Offeror's board of directors by means, e.g., ownership, contract, or operation of law.

(3) "Foreign government" means any governing body organized and existing under the laws of any country other than the United States and its possessions and trust territories and any agent or instrumentality of that government.

(4) "Proscribed information" means--

(i) Top Secret information;

(ii) Communications Security (COMSEC) information, except classified keys used to operate secure telephone unites (STU IIIs);

(iii) Restricted Data as defined in the U.S. Atomic Energy Act of 1954, as amended;

(iv) Special Access Program (SAP) information; or

(v) Sensitive Compartmental Information (SCI).

(b) Prohibition on award. No contract under a national security program may be awarded to a company owned by an entity controlled by a foreign government if that company requires access to proscribed information to perform the contract, unless the Secretary of Defense or designee has waived application of 10 U.S.C.2536(a).

(c) Disclosure.
The Offeror shall disclose any interest a foreign government has in the Offeror when that interest constitutes control by a foreign government as defined in this provision. If the Offeror is a subsidiary, it shall also disclose any reportable interest a foreign government has in any entity that owns or controls the subsidiary, including reportable interest concerning the Offeror's immediate parent, intermediate parents, and the ultimate parent. Use separate paper as needed, and provide the information in the following format:

Offeror's Point of Contact for Questions about Disclosure
(Name and Phone Number with Country Code, City Code and Area Code, as applicable)

Name and Address of Offeror

Name and Address of Entity Controlled by a Foreign Government	Description of Interest, Ownership Percentage, and Identification of Foreign Government

(End of provision)

252.247-7022 REPRESENTATION OF EXTENT OF TRANSPORTATION BY SEA (AUG 1992)

(a) The Offeror shall indicate by checking the appropriate blank in paragraph (b) of this provision whether transportation of supplies by sea is anticipated under the resultant contract. The term supplies is defined in the Transportation of Supplies by Sea clause of this solicitation.

(b) Representation. The Offeror represents that it:

____ (1) Does anticipate that supplies will be transported by sea in the performance of any contract or subcontract resulting from this solicitation.

____ (2) Does not anticipate that supplies will be transported by sea in the performance of any contract or subcontract resulting from this solicitation.

(c) Any contract resulting from this solicitation will include the Transportation of Supplies by Sea clause. If the Offeror represents that it will not use ocean transportation, the resulting contract will also include the Defense FAR Supplement clause at 252.247-7024, Notification of Transportation of Supplies by Sea.

(End of provision)

Section 00700 - CONTRACT CLAUSES

CLAUSES INCORPORATED BY FULL TEXT

52.202-1 DEFINITIONS (JUL 2004)

(a) When a solicitation provision or contract clause uses a word or term that is defined in the Federal Acquisition Regulation (FAR), the word or term has the same meaning as the definition in FAR 2.101 in effect at the time the solicitation was issued, unless--

(1) The solicitation, or amended solicitation, provides a different definition;

(2) The contracting parties agree to a different definition;

(3) The part, subpart, or section of the FAR where the provision or clause is prescribed provides a different meaning; or

(4) The word or term is defined in FAR Part 31, for use in the cost principles and procedures.

(b) The FAR Index is a guide to words and terms the FAR defines and shows where each definition is located. The FAR Index is available via the Internet at http://www.acqnet.gov at the end of the FAR, after the FAR Appendix.

(End of clause)

52.203-3 GRATUITIES (APR 1984)

(a) The right of the Contractor to proceed may be terminated by written notice if, after notice and hearing, the agency head or a designee determines that the Contractor, its agent, or another representative--

(1) Offered or gave a gratuity (e.g., an entertainment or gift) to an officer, official, or employee of the Government; and

(2) Intended, by the gratuity, to obtain a contract or favorable treatment under a contract.

(b) The facts supporting this determination may be reviewed by any court having lawful jurisdiction.

(c) If this contract is terminated under paragraph (a) of this clause, the Government is entitled--

(1) To pursue the same remedies as in a breach of the contract; and

(2) In addition to any other damages provided by law, to exemplary damages of not less than 3 nor more than 10 times the cost incurred by the Contractor in giving gratuities to the person concerned, as determined by the agency head or a designee. (This subparagraph (c)(2) is applicable only if this contract uses money appropriated to the Department of Defense.)

(d) The rights and remedies of the Government provided in this clause shall not be exclusive and are in addition to any other rights and remedies provided by law or under this contract.

(End of clause)

52.203-5 COVENANT AGAINST CONTINGENT FEES (APR 1984)

(a) The Contractor warrants that no person or agency has been employed or retained to solicit or obtain this contract upon an agreement or understanding for a contingent fee, except a bona fide employee or agency. For breach or violation of this warranty, the Government shall have the right to annul this contract without liability or, in its discretion, to deduct from the contract price or consideration, or otherwise recover, the full amount of the contingent fee.

(b) "Bona fide agency," as used in this clause, means an established commercial or selling agency, maintained by a contractor for the purpose of securing business, that neither exerts nor proposes to exert improper influence to solicit or obtain Government contracts nor holds itself out as being able to obtain any Government contract or contracts through improper influence.

"Bona fide employee," as used in this clause, means a person, employed by a contractor and subject to the contractor's supervision and control as to time, place, and manner of performance, who neither exerts nor proposes to exert improper influence to solicit or obtain Government contracts nor holds out as being able to obtain any Government contract or contracts through improper influence.

"Contingent fee," as used in this clause, means any commission, percentage, brokerage, or other fee that is contingent upon the success that a person or concern has in securing a Government contract.

"Improper influence," as used in this clause, means any influence that induces or tends to induce a Government employee or officer to give consideration or to act regarding a Government contract on any basis other than the merits of the matter.

(End of clause)

52.203-7 ANTI-KICKBACK PROCEDURES. (JUL 1995)

(a) Definitions.

"Kickback," as used in this clause, means any money, fee, commission, credit, gift, gratuity, thing of value, or compensation of any kind which is provided, directly or indirectly, to any prime Contractor, prime Contractor employee, subcontractor, or subcontractor employee for the purpose of improperly obtaining or rewarding favorable treatment in connection with a prime contract or in connection with a subcontract relating to a prime contract.

"Person," as used in this clause, means a corporation, partnership, business association of any kind, trust, joint-stock company, or individual.

"Prime contract," as used in this clause, means a contract or contractual action entered into by the United States for the purpose of obtaining supplies, materials, equipment, or services of any kind.

"Prime Contractor," as used in this clause, means a person who has entered into a prime contract with the United States.

"Prime Contractor employee," as used in this clause, means any officer, partner, employee, or agent of a prime Contractor.

"Subcontract," as used in this clause, means a contract or contractual action entered into by a prime Contractor or subcontractor for the purpose of obtaining supplies, materials, equipment, or services of any kind under a prime contract.

"Subcontractor," as used in this clause, (1) means any person, other than the prime Contractor, who offers to furnish or furnishes any supplies, materials, equipment, or services of any kind under a prime contract or a subcontract entered into in connection with such prime contract, and (2) includes any person who offers to furnish or furnishes general supplies to the prime Contractor or a higher tier subcontractor.

"Subcontractor employee," as used in this clause, means any officer, partner, employee, or agent of a subcontractor.

(b) The Anti-Kickback Act of 1986 (41 U.S.C. 51-58) (the Act), prohibits any person from -

(1) Providing or attempting to provide or offering to provide any kickback;

(2) Soliciting, accepting, or attempting to accept any kickback; or

(3) Including, directly or indirectly, the amount of any kickback in the contract price charged by a prime Contractor to the United States or in the contract price charged by a subcontractor to a prime Contractor or higher tier subcontractor.

(c)(1) The Contractor shall have in place and follow reasonable procedures designed to prevent and detect possible violations described in paragraph (b) of this clause in its own operations and direct business relationships.

(2) When the Contractor has reasonable grounds to believe that a violation described in paragraph (b) of this clause may have occurred, the Contractor shall promptly report in writing the possible violation. Such reports shall be made to the inspector general of the contracting agency, the head of the contracting agency if the agency does not have an inspector general, or the Department of Justice.

(3) The Contractor shall cooperate fully with any Federal agency investigating a possible violation described in paragraph (b) of this clause.

(4) The Contracting Officer may (i) offset the amount of the kickback against any monies owed by the United States under the prime contract and/or (ii) direct that the Prime Contractor withhold, from sums owed a subcontractor under the prime contract, the amount of any kickback. The Contracting Officer may order the monies withheld under subdivision (c)(4)(ii) of this clause be paid over to the Government unless the Government has already offset those monies under subdivision (c)(4)(i) of this clause. In either case, the Prime Contractor shall notify the Contracting Officer when the monies are withheld.

(5) The Contractor agrees to incorporate the substance of this clause, including this subparagraph (c)(5) but excepting subparagraph (c)(1), in all subcontracts under this contract which exceed $100,000.

52.203-8 CANCELLATION, RESCISSION, AND RECOVERY OF FUNDS FOR ILLEGAL OR IMPROPER ACTIVITY (JAN 1997)

(a) If the Government receives information that a contractor or a person has engaged in conduct constituting a violation of subsection (a), (b), (c), or (d) of Section 27 of the Office of Federal Procurement Policy Act (41 U.S.C. 423) (the Act), as amended by section 4304 of the 1996 National Defense Authorization Act for Fiscal Year 1996 (Pub. L. 104-106), the Government may--

(1) Cancel the solicitation, if the contract has not yet been awarded or issued; or

(2) Rescind the contract with respect to which--

(i) The Contractor or someone acting for the Contractor has been convicted for an offense where the conduct constitutes a violation of subsection 27(a) or (b) of the Act for the purpose of either--

(A) Exchanging the information covered by such subsections for anything of value; or

(B) Obtaining or giving anyone a competitive advantage in the award of a Federal agency procurement contract; or

(ii) The head of the contracting activity has determined, based upon a preponderance of the evidence, that the Contractor or someone acting for the Contractor has engaged in conduct constituting an offense punishable under subsections 27(e)(1) of the Act.

(b) If the Government rescinds the contract under paragraph (a) of this clause, the Government is entitled to recover, in addition to any penalty prescribed by law, the amount expended under the contract.

(c) The rights and remedies of the Government specified herein are not exclusive, and are in addition to any other rights and remedies provided by law, regulation, or under this contract.

(End of clause)

52.203-10 PRICE OR FEE ADJUSTMENT FOR ILLEGAL OR IMPROPER ACTIVITY (JAN 1997)

(a) The Government, at its election, may reduce the price of a fixed-price type contract and the total cost and fee under a cost-type contract by the amount of profit or fee determined as set forth in paragraph (b) of this clause if the head of the contracting activity or designee determines that there was a violation of subsection 27 (a), (b), or (c) of the Office of Federal Procurement Policy Act, as amended (41 U.S.C. 423), as implemented in section 3.104 of the Federal Acquisition Regulation.

(b) The price or fee reduction referred to in paragraph (a) of this clause shall be--

(1) For cost-plus-fixed-fee contracts, the amount of the fee specified in the contract at the time of award;

(2) For cost-plus-incentive-fee contracts, the target fee specified in the contract at the time of award, notwithstanding any minimum fee or "fee floor" specified in the contract;

(3) For cost-plus-award-fee contracts--

(i) The base fee established in the contract at the time of contract award;

(ii) If no base fee is specified in the contract, 30 percent of the amount of each award fee otherwise payable to the Contractor for each award fee evaluation period or at each award fee determination point.

(4) For fixed-price-incentive contracts, the Government may--

(i) Reduce the contract target price and contract target profit both by an amount equal to the initial target profit specified in the contract at the time of contract award; or

(ii) If an immediate adjustment to the contract target price and contract target profit would have a significant adverse impact on the incentive price revision relationship under the contract, or adversely affect the contract financing provisions, the Contracting Officer may defer such adjustment until establishment of the total final price of the contract. The total final price established in accordance with the incentive price revision provisions of the contract shall be reduced by an amount equal to the initial target profit specified in the contract at the time of

contract award and such reduced price shall be the total final contract price.

(5) For firm-fixed-price contracts, by 10 percent of the initial contract price or a profit amount determined by the Contracting Officer from records or documents in existence prior to the date of the contract award.

(c) The Government may, at its election, reduce a prime contractor's price or fee in accordance with the procedures of paragraph (b) of this clause for violations of the Act by its subcontractors by an amount not to exceed the amount of profit or fee reflected in the subcontract at the time the subcontract was first definitively priced.

(d) In addition to the remedies in paragraphs (a) and (c) of this clause, the Government may terminate this contract for default. The rights and remedies of the Government specified herein are not exclusive, and are in addition to any other rights and remedies provided by law or under this contract.

(End of clause)

52.203-12 LIMITATION ON PAYMENTS TO INFLUENCE CERTAIN FEDERAL TRANSACTIONS (JUN 2003)

(a) Definitions.

"Agency," as used in this clause, means executive agency as defined in 2.101.

"Covered Federal action," as used in this clause, means any of the following Federal actions:

(1) The awarding of any Federal contract.

(2) The making of any Federal grant.

(3) The making of any Federal loan.

(4) The entering into of any cooperative agreement.

(5) The extension, continuation, renewal, amendment, or modification of any Federal contract, grant, loan, or cooperative agreement.

"Indian tribe" and "tribal organization," as used in this clause, have the meaning provided in section 4 of the Indian Self-Determination and Education Assistance Act (25 U.S.C. 450B) and include Alaskan Natives.

"Influencing or attempting to influence," as used in this clause, means making, with the intent to influence, any communication to or appearance before an officer or employee of any agency, a Member of Congress, an officer or employee of Congress, or an employee of a Member of Congress in connection with any covered Federal action.

"Local government," as used in this clause, means a unit of government in a State and, if chartered, established, or otherwise recognized by a State for the performance of a governmental duty, including a local public authority, a special district, an intrastate district, a council of governments, a sponsor group representative organization, and any other instrumentality of a local government.

"Officer or employee of an agency," as used in this clause, includes the following individuals who are employed by an agency:

(1) An individual who is appointed to a position in the Government under Title 5, United States Code, including a position under a temporary appointment.

(2) A member of the uniformed services, as defined in subsection 101(3),Title 37, United States Code.

(3) A special Government employee, as defined in section 202, Title 18, United States Code.

(4) An individual who is a member of a Federal advisory committee, as defined by the Federal Advisory Committee Act, Title 5, United States Code, appendix 2.

"Person," as used in this clause, means an individual, corporation, company, association, authority, firm, partnership, society, State, and local government, regardless of whether such entity is operated for profit, or not for profit. This term excludes an Indian tribe, tribal organization, or any other Indian organization with respect to expenditures specifically permitted by other Federal law.

"Reasonable compensation," as used in this clause, means, with respect to a regularly employed officer or employee of any person, compensation that is consistent with the normal compensation for such officer or employee for work that is not furnished to, not funded by, or not furnished in cooperation with the Federal Government.

"Reasonable payment," as used in this clause, means, with respect to professional and other technical services, a payment in an amount that is consistent with the amount normally paid for such services in the private sector.

"Recipient," as used in this clause, includes the Contractor and all subcontractors. This term excludes an Indian tribe, tribal organization, or any other Indian organization with respect to expenditures specifically permitted by other Federal law.

"Regularly employed," as used in this clause, means, with respect to an officer or employee of a person requesting or receiving a Federal contract, an officer or employee who is employed by such person for at least 130 working days within 1 year immediately preceding the date of the submission that initiates agency consideration of such person for receipt of such contract. An officer or employee who is employed by such person for less than 130 working days within 1 year immediately preceding the date of the submission that initiates agency consideration of such person shall be considered to be regularly employed as soon as he or she is employed by such person for 130 working days.

State, as used in this clause, means a State of the United States, the District of Columbia, or an outlying area of the United States, an agency or instrumentality of a State, and multi-State, regional, or interstate entity having governmental duties and powers.

(b) Prohibitions.

(1) Section 1352 of Title 31, United States Code, among other things, prohibits a recipient of a Federal contract, grant, loan, or cooperative agreement from using appropriated funds to pay any person for influencing or attempting to influence an officer or employee of any agency, a Member of Congress, an officer or employee of Congress, or an employee of a Member of Congress in connection with any of the following covered Federal actions: the awarding of any Federal contract; the making of any Federal grant; the making of any Federal loan; the entering into of any cooperative agreement; or the modification of any Federal contract, grant, loan, or cooperative agreement.

(2) The Act also requires Contractors to furnish a disclosure if any funds other than Federal appropriated funds (including profit or fee received under a covered Federal transaction) have been paid, or will be paid, to any person for influencing or attempting to influence an officer or employee of any agency, a Member of Congress, an officer or employee of Congress, or an employee of a Member of Congress in connection with a Federal contract, grant, loan, or cooperative agreement.

(3) The prohibitions of the Act do not apply under the following conditions:

(i) Agency and legislative liaison by own employees.

(A) The prohibition on the use of appropriated funds, in subparagraph (b)(1) of this clause, does not apply in the case of a payment of reasonable compensation made to an officer or employee of a person requesting or receiving a covered Federal action if the payment is for agency and legislative liaison activities not directly related to a covered Federal action.

(B) For purposes of subdivision (b)(3)(i)(A) of this clause, providing any information specifically requested by an agency or Congress is permitted at any time.

(C) The following agency and legislative liaison activities are permitted at any time where they are not related to a specific solicitation for any covered Federal action:

(1) Discussing with an agency the qualities and characteristics (including individual demonstrations) of the person's products or services, conditions or terms of sale, and service capabilities.

(2) Technical discussions and other activities regarding the application or adaptation of the person's products or services for an agency's use.

(D) The following agency and legislative liaison activities are permitted where they are prior to formal solicitation of any covered Federal action--

(1) Providing any information not specifically requested but necessary for an agency to make an informed decision about initiation of a covered Federal action;

(2) Technical discussions regarding the preparation of an unsolicited proposal prior to its official submission; and

(3) Capability presentations by persons seeking awards from an agency pursuant to the provisions of the Small Business Act, as amended by Pub. L. 95-507, and subsequent amendments.

(E) Only those services expressly authorized by subdivision (b)(3)(i)(A) of this clause are permitted under this clause.

(ii) Professional and technical services.

(A) The prohibition on the use of appropriated funds, in subparagraph (b)(1) of this clause, does not apply in the case of--

(1) A payment of reasonable compensation made to an officer or employee of a person requesting or receiving a covered Federal action or an extension, continuation, renewal, amendment, or modification of a covered Federal action, if payment is for professional or technical services rendered directly in the preparation, submission, or negotiation of any bid, proposal, or application for that Federal action or for meeting requirements imposed by or pursuant to law as a condition for receiving that Federal action.

(2) Any reasonable payment to a person, other than an officer or employee of a person requesting or receiving a covered Federal action or an extension, continuation, renewal, amendment, or modification of a covered Federal action if the payment is for professional or technical services rendered directly in the preparation, submission, or negotiation of any bid, proposal, or application for that Federal action or for meeting requirements imposed by or pursuant to law as a condition for receiving that Federal action. Persons other than officers or employees of a person requesting or receiving a covered Federal action include consultants and trade associations.

(B) For purposes of subdivision (b)(3)(ii)(A) of this clause, "professional and technical services" shall be limited to advice and analysis directly applying any professional or technical discipline. For example, drafting of a legal document accompanying a bid or proposal by a lawyer is allowable. Similarly, technical advice provided by an engineer on the performance or operational capability of a piece of equipment rendered directly in the negotiation of a contract is allowable. However, communications with the intent to influence made by a professional (such as a

licensed lawyer) or a technical person (such as a licensed accountant) are not allowable under this section unless they provide advice and analysis directly applying their professional or technical expertise and unless the advice or analysis is rendered directly and solely in the preparation, submission or negotiation of a covered Federal action. Thus, for example, communications with the intent to influence made by a lawyer that do not provide legal advice or analysis directly and solely related to the legal aspects of his or her client's proposal, but generally advocate one proposal over another are not allowable under this section because the lawyer is not providing professional legal services. Similarly, communications with the intent to influence made by an engineer providing an engineering analysis prior to the preparation or submission of a bid or proposal are not allowable under this section since the engineer is providing technical services but not directly in the preparation, submission or negotiation of a covered Federal action.

(C) Requirements imposed by or pursuant to law as a condition for receiving a covered Federal award include those required by law or regulation and any other requirements in the actual award documents.

(D) Only those services expressly authorized by subdivisions (b)(3)(ii)(A)(1) and (2) of this clause are permitted under this clause.

(E) The reporting requirements of FAR 3.803(a) shall not apply with respect to payments of reasonable compensation made to regularly employed officers or employees of a person.

(c) Disclosure.

(1) The Contractor who requests or receives from an agency a Federal contract shall file with that agency a disclosure form, OMB standard form LLL, Disclosure of Lobbying Activities, if such person has made or has agreed to make any payment using nonappropriated funds (to include profits from any covered Federal action), which would be prohibited under subparagraph (b)(1) of this clause, if paid for with appropriated funds.

(2) The Contractor shall file a disclosure form at the end of each calendar quarter in which there occurs any event that materially affects the accuracy of the information contained in any disclosure form previously filed by such person under subparagraph (c)(1) of this clause. An event that materially affects the accuracy of the information reported includes--

(i) A cumulative increase of $25,000 or more in the amount paid or expected to be paid for influencing or attempting to influence a covered Federal action; or

(ii) A change in the person(s) or individual(s) influencing or attempting to influence a covered Federal action; or

(iii) A change in the officer(s), employee(s), or Member(s) contacted to influence or attempt to influence a covered Federal action.

(3) The Contractor shall require the submittal of a certification, and if required, a disclosure form by any person who requests or receives any subcontract exceeding $100,000 under the Federal contract.

(4) All subcontractor disclosure forms (but not certifications) shall be forwarded from tier to tier until received by the prime Contractor. The prime Contractor shall submit all disclosures to the Contracting Officer at the end of the calendar quarter in which the disclosure form is submitted by the subcontractor. Each subcontractor certification shall be retained in the subcontract file of the awarding Contractor.

(d) Agreement. The Contractor agrees not to make any payment prohibited by this clause.

(e) Penalties.

(1) Any person who makes an expenditure prohibited under paragraph (a) of this clause or who fails to file or amend the disclosure form to be filed or amended by paragraph (b) of this clause shall be subject to civil penalties

as provided for by 31 U.S.C. 1352. An imposition of a civil penalty does not prevent the Government from seeking any other remedy that may be applicable.

(2) Contractors may rely without liability on the representation made by their subcontractors in the certification and disclosure form.

(f) Cost allowability. Nothing in this clause makes allowable or reasonable any costs which would otherwise be unallowable or unreasonable. Conversely, costs made specifically unallowable by the requirements in this clause will not be made allowable under any other provision.

(End of clause)

52.204-4 PRINTED OR COPIED DOUBLE-SIDED ON RECYCLED PAPER (AUG 2000)

(a) Definitions. As used in this clause--

“Postconsumer material” means a material or finished product that has served its intended use and has been discarded for disposal or recovery, having completed its life as a consumer item. Postconsumer material is a part of the broader category of “recovered material.” For paper and paper products, postconsumer material means “postconsumer fiber” defined by the U.S. Environmental Protection Agency (EPA) as--

(1) Paper, paperboard, and fibrous materials from retail stores, office buildings, homes, and so forth, after they have passed through their end-usage as a consumer item, including: used corrugated boxes; old newspapers; old magazines; mixed waste paper; tabulating cards; and used cordage; or

(2) All paper, paperboard, and fibrous materials that enter and are collected from municipal solid waste; but not

(3) Fiber derived from printers' over-runs, converters' scrap, and over-issue publications.

“Printed or copied double-sided” means printing or reproducing a document so that information is on both sides of a sheet of paper.

“Recovered material,” for paper and paper products, is defined by EPA in its Comprehensive Procurement Guideline as “recovered fiber” and means the following materials:

(1) Postconsumer fiber; and

(2) Manufacturing wastes such as--

(i) Dry paper and paperboard waste generated after completion of the papermaking process (that is, those manufacturing operations up to and including the cutting and trimming of the paper machine reel into smaller rolls or rough sheets) including: envelope cuttings, bindery trimmings, and other paper and paperboard waste resulting from printing, cutting, forming, and other converting operations; bag, box, and carton manufacturing wastes; and butt rolls, mill wrappers, and rejected unused stock; and

(ii) Repulped finished paper and paperboard from obsolete inventories of paper and paperboard manufacturers, merchants, wholesalers, dealers, printers, converters, or others.

(b) In accordance with Section 101 of Executive Order 13101 of September 14, 1998, Greening the Government through Waste Prevention, Recycling, and Federal Acquisition, the Contractor is encouraged to submit paper documents, such as offers, letters, or reports, that are printed or copied double-sided on recycled paper that meet

minimum content standards specified in Section 505 of Executive Order 13101, when not using electronic commerce methods to submit information or data to the Government.

(c) If the Contractor cannot purchase high-speed copier paper, offset paper, forms bond, computer printout paper, carbonless paper, file folders, white wove envelopes, writing and office paper, book paper, cotton fiber paper, and cover stock meeting the 30 percent postconsumer material standard for use in submitting paper documents to the Government, it should use paper containing no less than 20 percent postconsumer material. This lesser standard should be used only when paper meeting the 30 percent postconsumer material standard is not obtainable at a reasonable price or does not meet reasonable performance standards.

(End of clause)

52.204-7 CENTRAL CONTRACTOR REGISTRATION (OCT 2003)

(a) Definitions. As used in this clause--

Central Contractor Registration (CCR) database means the primary Government repository for Contractor information required for the conduct of business with the Government.

Data Universal Numbering System (DUNS) number means the 9-digit number assigned by Dun and Bradstreet, Inc. (D&B) to identify unique business entities.

Data Universal Numbering System +4 (DUNS+4) number means the DUNS number assigned by D&B plus a 4-character suffix that may be assigned by a business concern. (D&B has no affiliation with this 4-character suffix.) This 4-character suffix may be assigned at the discretion of the business concern to establish additional CCR records for identifying alternative Electronic Funds Transfer (EFT) accounts (see the FAR at Subpart 32.11) for the same parent concern.

Registered in the CCR database means that--

(1) The Contractor has entered all mandatory information, including the DUNS number or the DUNS+4 number, into the CCR database; and

(2) The Government has validated all mandatory data fields and has marked the record “Active”.

(b)(1) By submission of an offer, the offeror acknowledges the requirement that a prospective awardee shall be registered in the CCR database prior to award, during performance, and through final payment of any contract, basic agreement, basic ordering agreement, or blanket purchasing agreement resulting from this solicitation.

(2) The offeror shall enter, in the block with its name and address on the cover page of its offer, the annotation “DUNS” or “DUNS +4” followed by the DUNS or DUNS +4 number that identifies the offeror's name and address exactly as stated in the offer. The DUNS number will be used by the Contracting Officer to verify that the offeror is registered in the CCR database.

(c) If the offeror does not have a DUNS number, it should contact Dun and Bradstreet directly to obtain one.

(1) An offeror may obtain a DUNS number--

(i) If located within the United States, by calling Dun and Bradstreet at 1-866-705-5711 or via the Internet at http://www.dnb.com; or

(ii) If located outside the United States, by contacting the local Dun and Bradstreet office.

(2) The offeror should be prepared to provide the following information:

(i) Company legal business.

(ii) Tradestyle, doing business, or other name by which your entity is commonly recognized.

(iii) Company Physical Street Address, City, State, and Zip Code.

(iv) Company Mailing Address, City, State and Zip Code (if separate from physical).

(v) Company Telephone Number.

(vi) Date the company was started.

(vii) Number of employees at your location.

(viii) Chief executive officer/key manager.

(ix) Line of business (industry).

(x) Company Headquarters name and address (reporting relationship within your entity).

(d) If the Offeror does not become registered in the CCR database in the time prescribed by the Contracting Officer, the Contracting Officer will proceed to award to the next otherwise successful registered Offeror.

(e) Processing time, which normally takes 48 hours, should be taken into consideration when registering. Offerors who are not registered should consider applying for registration immediately upon receipt of this solicitation.

(f) The Contractor is responsible for the accuracy and completeness of the data within the CCR database, and for any liability resulting from the Government's reliance on inaccurate or incomplete data. To remain registered in the CCR database after the initial registration, the Contractor is required to review and update on an annual basis from the date of initial registration or subsequent updates its information in the CCR database to ensure it is current, accurate and complete. Updating information in the CCR does not alter the terms and conditions of this contract and is not a substitute for a properly executed contractual document.

(g)(1)(i) If a Contractor has legally changed its business name, “doing business as” name, or division name (whichever is shown on the contract), or has transferred the assets used in performing the contract, but has not completed the necessary requirements regarding novation and change-of-name agreements in Subpart 42.12, the Contractor shall provide the responsible Contracting Officer a minimum of one business day's written notification of its intention to (A) change the name in the CCR database; (B) comply with the requirements of Subpart 42.12 of the FAR; and (C) agree in writing to the timeline and procedures specified by the responsible Contracting Officer. The Contractor must provide with the notification sufficient documentation to support the legally changed name.

(ii) If the Contractor fails to comply with the requirements of paragraph (g)(1)(i) of this clause, or fails to perform the agreement at paragraph (g)(1)(i)(C) of this clause, and, in the absence of a properly executed novation or change-of-name agreement, the CCR information that shows the Contractor to be other than the Contractor indicated in the contract will be considered to be incorrect information within the meaning of the “Suspension of Payment” paragraph of the electronic funds transfer (EFT) clause of this contract.

(2) The Contractor shall not change the name or address for EFT payments or manual payments, as appropriate, in the CCR record to reflect an assignee for the purpose of assignment of claims (see FAR Subpart 32.8, Assignment of Claims). Assignees shall be separately registered in the CCR database. Information provided to the Contractor's CCR record that indicates payments, including those made by EFT, to an ultimate recipient other than that

Contractor will be considered to be incorrect information within the meaning of the “Suspension of payment” paragraph of the EFT clause of this contract.

(h) Offerors and Contractors may obtain information on registration and annual confirmation requirements via the internet at http://www.ccr.gov or by calling 1-888-227-2423, or 269-961-5757.

(End of clause)

52.209-6 PROTECTING THE GOVERNMENT'S INTEREST WHEN SUBCONTRACTING WITH CONTRACTORS DEBARRED, SUSPENDED, OR PROPOSED FOR DEBARMENT (JUL 1995)

(a) The Government suspends or debars Contractors to protect the Government's interests. The Contractor shall not enter into any subcontract in excess of the $25,000 with a Contractor that is debarred, suspended, or proposed for debarment unless there is a compelling reason to do so.

(b) The Contractor shall require each proposed first-tier subcontractor, whose subcontract will exceed $25,000, to disclose to the Contractor, in writing, whether as of the time of award of the subcontract, the subcontractor, or its principles, is or is not debarred, suspended, or proposed for debarment by the Federal Government.

(c) A corporate officer or a designee of the Contractor shall notify the Contracting Officer, in writing, before entering into a subcontract with a party that is debarred, suspended, or proposed for debarment (see FAR 9.404 for information on the List of Parties Excluded from Federal Procurement and Nonprocurement Programs). The notice must include the following:

(1) The name of the subcontractor.

(2) The Contractor's knowledge of the reasons for the subcontractor being on the List of Parties Excluded from Federal Procurement and Nonprocurement Programs.

(3) The compelling reason(s) for doing business with the subcontractor notwithstanding its inclusion on the List of Parties Excluded from Federal Procurement and Nonprocurement Programs.

(4) The systems and procedures the Contractor has established to ensure that it is fully protecting the Government's interests when dealing with such subcontractor in view of the specific basis for the party's debarment, suspension, or proposed debarment.

(End of clause)

52.211-10 COMMENCEMENT, PROSECUTION, AND COMPLETION OF WORK (APR 1984)

The Contractor shall be required to (a) commence work under this contract within 10 calendar days after the date the Contractor receives the notice to proceed, (b) prosecute the work diligently, and (c) complete the entire work ready for use not later than .270 calendar days. The time stated for completion shall include final cleanup of the premises.

*The Contracting Officer shall specify either a number of days after the date the contractor receives the notice to proceed, or a calendar date.

(End of clause)

52.211-12 LIQUIDATED DAMAGES--CONSTRUCTION (SEP 2000)

(a) If the Contractor fails to complete the work within the time specified in the contract, the Contractor shall pay liquidated damages to the Government in the amount of $570.00 for each calendar day of delay until the work is completed or accepted.

(b) If the Government terminates the Contractor's right to proceed, liquidated damages will continue to accrue until the work is completed. These liquidated damages are in addition to excess costs of repurchase under the Termination clause.

(End of clause)

52.211-13 TIME EXTENSIONS (SEP 2000)

Time extensions for contract changes will depend upon the extent, if any, by which the changes cause delay in the completion of the various elements of construction. The change order granting the time extension may provide that the contract completion date will be extended only for those specific elements related to the changed work and that the remaining contract completion dates for all other portions of the work will not be altered. The change order also may provide an equitable readjustment of liquidated damages under the new completion schedule.

(End of clause)

52.214-26 AUDIT AND RECORDS--SEALED BIDDING. (OCT 1997)

(a) As used in this clause, records includes books, documents, accounting procedures and practices, and other data, regardless of type and regardless of whether such items are in written form, in the form of computer data, or in any other form.

(b) Cost or pricing data. If the Contractor has been required to submit cost or pricing data in connection with the pricing of any modification to this contract, the Contracting Officer, or an authorized representative of the Contracting Officer, in order to evaluate the accuracy, completeness, and currency of the cost or pricing data, shall have the right to examine and audit all of the Contractor's records, including computations and projections, related to--

(1) The proposal for the modification;

(2) The discussions conducted on the proposal(s), including those related to negotiating;

(3) Pricing of the modification; or

(4) Performance of the modification.

(c) Comptroller General. In the case of pricing any modification, the Comptroller General of the United States, or an authorized representative, shall have the same rights as specified in paragraph (b) of this clause.

(d) Availability. The Contractor shall make available at its office at all reasonable times the materials described in reproduction, until 3 years after final payment under this contract, or for any other period specified in Subpart 4.7 of

the Federal Acquisition Regulation (FAR). FAR Subpart 4.7, Contractor Records Retention, in effect on the data of this contract, is incorporated by reference in its entirety and made a part of this contract.

(1) If this contract is completely or partially terminated, the records relating to the work terminated shall be made available for 3 years after any resulting final termination settlement.

(2) Records pertaining to appeals under the Disputes clause or to litigation or the settlement of claims arising under or relating to the performance of this contract shall be made available until disposition of such appeals, litigation, or claims.

(e) The Contractor shall insert a clause containing all the provisions of this clause, including this paragraph (e), in all subcontracts expected to exceed the threshold in FAR 15.403-4(a)(1) for submission of cost or pricing data.

(End of clause)

52.214-27 PRICE REDUCTION FOR DEFECTIVE COST OR PRICING DATA - MODIFICATIONS - SEALED BIDDING. (OCT 1997)

(a) This clause shall become operative only for any modification to this contract involving aggregate increases and/or decreases in costs, plus applicable profits, expected to exceed the threshold for the submission of cost or pricing data at FAR 15.403-4(a)(1), except that this clause does not apply to a modification if an exception under FAR 15.403-1(b) applies.

(1) Based on adequate price competition;

(2) Based on established catalog or market prices of commercial items sold in substantial quantities to the general public; or

(3) Set by law or regulation.

(b) If any price, including profit, negotiated in connection with any modification under this clause, was increased by any significant amount because

(1) the Contractor or a subcontractor furnished cost or pricing data that were not complete, accurate, and current as certified in its Certificate of Current Cost or Pricing Data;

(2) a subcontractor or prospective subcontractor furnished the Contractor cost or pricing data that were not complete, accurate, and current as certified in the Contractor's Certificate of Current Cost or Pricing Data; or

(3) any of these parties furnished data of any description that were not accurate, the price shall be reduced accordingly and the contract shall be modified to reflect the reduction. This right to a price reduction is limited to that resulting from defects in data relating to modifications for which this clause becomes operative under paragraph (a) above.

(c) Any reduction in the contract price under paragraph (b) above due to defective data from a prospective subcontractor that was not subsequently awarded the subcontract shall be limited to the amount, plus applicable overhead and profit markup, by which:

(1) the actual subcontract; or

(2) the actual cost to the Contractor, if there was no subcontract, was less than the prospective subcontract cost estimate submitted by the Contractor; provided, that the actual subcontract price was not itself affected by defective cost or pricing data.

(d) If the Contracting Officer determines under paragraph (b) of this clause that a price or cost reduction should be made:

(1) the Contractor agrees not to raise the following matters as a defense:

(i) The Contractor or subcontractor was a sole source supplier or otherwise was in a superior bargaining position and thus the price of the contract would not have been modified even if accurate, complete, and current cost or pricing data had been submitted;

(ii) The Contracting Officer should have known that the cost or pricing data in issue were defective even though the Contractor or subcontractor took no affirmative action to bring the character of the data to the attention of the Contracting Officer;

(iii) The contract was based on an agreement about the total cost of the contract and there was no agreement about the cost of each item procured under the contract; or

(iv) The Contractor or subcontractor did not submit a Certificate of Current Cost or Pricing Data.

(2) Except as prohibited by subdivision (d)(2)(ii) of this clause:

(i) an offset in an amount determined appropriate by the Contracting Officer based upon the facts shall be allowed against the amount of a contract price reduction if:

(A) The Contractor certifies to the Contracting Officer that, to the best of the Contractor's knowledge and belief, the Contractor is entitled to the offset in the amount requested; and

(B) The Contractor proves that the cost or pricing data were available before the date of agreement on the price of the contract (or price of the modification) and that the data were not submitted before such date.

(ii) An offset shall not be allowed if:

(A) The understated data was known by the Contractor to be understated when the Certificate of Current Cost or Pricing Data was signed; or (B) The Government proves that the facts demonstrate that the contract price would not have increased in the amount to be offset even if the available data had been submitted before the date of agreement on price.

(e) If any reduction in the contract price under this clause reduces the price of items for which payment was made prior to the date of the modification reflecting the price reduction, the Contractor shall be liable to and shall pay the United States at the time such overpayment is repaid:

(1) Simple interest on the amount of such overpayment to be computed from the date(s) of overpayment to the Contractor to the date the Government is repaid by the Contractor at the applicable underpayment rate effective for each quarter prescribed by the Secretary of the Treasury under 26 U.S.C. 6621(a)(2); and

(2) A penalty equal to the amount of the overpayment, if the Contractor or subcontractor knowingly submitted cost or pricing data which were incomplete, inaccurate, or noncurrent.

(End of clause)

52.219-8 UTILIZATION OF SMALL BUSINESS CONCERNS (MAY 2004)

(a) It is the policy of the United States that small business concerns, veteran-owned small business concerns, service-disabled veteran-owned small business concerns, HUBZone small business concerns, small disadvantaged business concerns, and women-owned small business concerns shall have the maximum practicable opportunity to participate in performing contracts let by any Federal agency, including contracts and subcontracts for subsystems, assemblies, components, and related services for major systems. It is further the policy of the United States that its prime contractors establish procedures to ensure the timely payment of amounts due pursuant to the terms of their subcontracts with small business concerns, veteran-owned small business concerns, service-disabled veteran-owned small business concerns, HUBZone small business concerns, small disadvantaged business concerns, and women-owned small business concerns.

(b) The Contractor hereby agrees to carry out this policy in the awarding of subcontracts to the fullest extent consistent with efficient contract performance. The Contractor further agrees to cooperate in any studies or surveys as may be conducted by the United States Small Business Administration or the awarding agency of the United States as may be necessary to determine the extent of the Contractor's compliance with this clause.

Definitions. As used in this contract--

HUBZone small business concern means a small business concern that appears on the List of Qualified HUBZone Small Business Concerns maintained by the Small Business Administration.

Service-disabled veteran-owned small business concern--

(1) Means a small business concern--

(i) Not less than 51 percent of which is owned by one or more service-disabled veterans or, in the case of any publicly owned business, not less than 51 percent of the stock of which is owned by one or more service-disabled veterans; and

(ii) The management and daily business operations of which are controlled by one or more service-disabled veterans or, in the case of a service-disabled veteran with permanent and severe disability, the spouse or permanent caregiver of such veteran.

(2) Service-disabled veteran means a veteran, as defined in 38 U.S.C. 101(2), with a disability that is service-connected, as defined in 38 U.S.C. 101(16).

Small business concern means a small business as defined pursuant to Section 3 of the Small Business Act and relevant regulations promulgated pursuant thereto.

Small disadvantaged business concern means a small business concern that represents, as part of its offer that--

(1) It has received certification as a small disadvantaged business concern consistent with 13 CFR part 124, subpart B;

(2) No material change in disadvantaged ownership and control has occurred since its certification;

(3) Where the concern is owned by one or more individuals, the net worth of each individual upon whom the certification is based does not exceed $750,000 after taking into account the applicable exclusions set forth at 13 CFR 124.104(c)(2); and

(4) It is identified, on the date of its representation, as a certified small disadvantaged business in the database maintained by the Small Business Administration (PRO-Net).

Veteran-owned small business concern means a small business concern--

(1) Not less than 51 percent of which is owned by one or more veterans (as defined at 38 U.S.C. 101(2)) or, in the case of any publicly owned business, not less than 51 percent of the stock of which is owned by one or more veterans; and

(2) The management and daily business operations of which are controlled by one or more veterans.

Women-owned small business concern means a small business concern--

(1) That is at least 51 percent owned by one or more women, or, in the case of any publicly owned business, at least 51 percent of the stock of which is owned by one or more women; and

(2) Whose management and daily business operations are controlled by one or more women.

(d) Contractors acting in good faith may rely on written representations by their subcontractors regarding their status as a small business concern, a veteran-owned small business concern, a service-disabled veteran-owned small business concern, a HUBZone small business concern, a small disadvantaged business concern, or a women-owned small business concern.

(End of clause)

52.219-18 NOTIFICATION OF COMPETITION LIMITED TO ELIGIBLE 8(A) CONCERNS (JUN 2003)--ALTERNATE I (NOV 1989)

(a) Offers are solicited only from small business concerns expressly certified by the Small Business Administration (SBA) for participation in the SBA's 8(a) Program and which meet the following criteria at the time of submission of offer--

(1) The Offeror is in conformance with the 8(a) support limitation set forth in its approved business plan; and

(2) The Offeror is in conformance with the Business Activity Targets set forth in its approved business plan or any remedial action directed by the SBA.

(4) The offeror's approved business plan is on the file and serviced by .

(b) By submission of its offer, the Offeror certifies that it meets all of the criteria set forth in paragraph (a) of this clause.

(c) Any award resulting from this solicitation will be made to the Small Business Administration, which will subcontract performance to the successful 8(a) offeror selected through the evaluation criteria set forth in this solicitation.

(d)(1) Agreement. A small business concern submitting an offer in its own name shall furnish, in performing the contract, only end items manufactured or produced by small business concerns in the United States or its outlying areas. If this procurement is processed under simplified **acquisition** procedures and the total amount of this contract does not exceed $25,000, a small business concern may furnish the product of any domestic firm. This paragraph does not apply to construction or service contracts.

(1) The insert name of SBA's contractor will notify the insert name of contracting agency Contracting Officer in writing immediately upon entering an agreement (either oral or written) to transfer all or part

of its stock or other ownership interest to any other party.

(End of clause)

52.222-3 CONVICT LABOR (JUN 2003)

(a) Except as provided in paragraph (b) of this clause, the Contractor shall not employ in the performance of this contract any person undergoing a sentence of imprisonment imposed by any court of a State, the District of Columbia, Puerto Rico, the Northern Mariana Islands, American Samoa, Guam, or the U.S. Virgin Islands.

(b) The Contractor is not prohibited from employing persons--

(1) On parole or probation to work at paid employment during the term of their sentence;

(2) Who have been pardoned or who have served their terms; or

(3) Confined for violation of the laws of any of the States, the District of Columbia, Puerto Rico, the Northern Mariana Islands, American Samoa, Guam, or the U.S. Virgin Islands who are authorized to work at paid employment in the community under the laws of such jurisdiction, if--

(i) The worker is paid or is in an approved work training program on a voluntary basis;

(ii) Representatives of local union central bodies or similar labor union organizations have been consulted;

(iii) Such paid employment will not result in the displacement of employed workers, or be applied in skills, crafts, or trades in which there is a surplus of available gainful labor in the locality, or impair existing contracts for services;

(iv) The rates of pay and other conditions of employment will not be less than those paid or provided for work of a similar nature in the locality in which the work is being performed; and

(v) The Attorney General of the United States has certified that the work-release laws or **regulations** of the jurisdiction involved are in conformity with the requirements of Executive Order 11755, as amended by Executive Orders 12608 and 12943.

(End of clause)

52.222-4 CONTRACT WORK HOURS AND SAFETY STANDARDS ACT - OVERTIME COMPENSATION. (SEP 2000)

(a) Overtime requirements. No Contractor or subcontractor employing laborers or mechanics (see Federal Acquisition Regulation 22.300) shall require or permit them to work over 40 hours in any workweek unless they are paid at least 1 and 1/2 times the basic rate of pay for each hour worked over 40 hours.

(b) Violation; liability for unpaid wages; liquidated damages. The responsible Contractor and subcontractor are liable for unpaid wages if they violate the terms in paragraph (a) of this clause. In addition, the Contractor and subcontractor are liable for liquidated damages payable to the Government. The Contracting Officer will assess liquidated damages at the rate of $10 per affected employee for each calendar day on which the employer required

or permitted the employee to work in excess of the standard workweek of 40 hours without paying overtime wages required by the Contract Work Hours and Safety Standards Act.

(c) Withholding for unpaid wages and liquidated damages. The Contracting Officer will withhold from payments due under the contract sufficient funds required to satisfy any Contractor or subcontractor liabilities for unpaid wages and liquidated damages. If amounts withheld under the contract are insufficient to satisfy Contractor or subcontractor liabilities, the Contracting Officer will withhold payments from other Federal or Federally assisted contracts held by the same Contractor that are subject to the Contract Work Hours and Safety Standards Act.

(d) Payrolls and basic records.

(1) The Contractor and its subcontractors shall maintain payrolls and basic payroll records for all laborers and mechanics working on the contract during the contract and shall make them available to the Government until 3 years after contract completion. The records shall contain the name and address of each employee, social security number, labor classifications, hourly rates of wages paid, daily and weekly number of hours worked, deductions made, and actual wages paid. The records need not duplicate those required for construction work by Department of Labor regulations at 29 CFR 5.5(a)(3) implementing the Davis-Bacon Act.

(2) The Contractor and its subcontractors shall allow authorized representatives of the Contracting Officer or the Department of Labor to inspect, copy, or transcribe records maintained under paragraph (d)(1) of this clause. The Contractor or subcontractor also shall allow authorized representatives of the Contracting Officer or Department of Labor to interview employees in the workplace during working hours.

(e) Subcontracts. The Contractor shall insert the provisions set forth in paragraphs (a) through (d) of this clause in subcontracts exceeding $100,000 and require subcontractors to include these provisions in any lower tier subcontracts. The Contractor shall be responsible for compliance by any subcontractor or lower-tier subcontractor with the provisions set forth in paragraphs (a) through (d) of this clause.

(End of clause)

52.222-6 DAVIS-BACON ACT (FEB 1995)

(a) All laborers and mechanics employed or working upon the site of the work will be paid unconditionally and not less often than once a week, and without subsequent deduction or rebate on any account (except such payroll deductions as are permitted by regulations issued by the Secretary of Labor under the Copeland Act (29 CFR Part 3), the full amount of wages and bona fide fringe benefits (or cash equivalents thereof) due at time of payment computed at rates not less than those contained in the wage determination of the Secretary of Labor which is attached hereto and made a part hereof, regardless of any contractual relationship which may be alleged to exist between the Contractor and such laborers and mechanics. Contributions made or costs reasonably anticipated for bona fide fringe benefits under section 1(b)(2) of the Davis-Bacon Act on behalf of laborers or mechanics are considered wages paid to such laborers or mechanics, subject to the provisions of paragraph (d) of this clause; also, regular contributions made or costs incurred for more than a weekly period (but not less often than quarterly) under plans, funds, or programs which cover the particular weekly period, are deemed to be constructively made or incurred during such period. Such laborers and mechanics shall be paid not less than the appropriate wage rate and fringe benefits in the wage determination for the classification of work actually performed, without regard to skill, except as provided in the clause entitled Apprentices and Trainees. Laborers or mechanics performing work in more than one classification may be compensated at the rate specified for each classification for the time actually worked therein; provided, That the employer's payroll records accurately set forth the time spent in each classification in which work is performed. The wage determination (including any additional classifications and wage rates conformed under paragraph (b) of this clause) and the Davis-Bacon poster (WH-1321) shall be posted at all times by the Contractor and its subcontractors at the site of the work in a prominent and accessible place where it can be easily seen by the workers.

(b)(1) The Contracting Officer shall require that any class of laborers or mechanics which is not listed in the wage determination and which is to be employed under the contract shall be classified in conformance with the wage determination. The Contracting Officer shall approve an additional classification and wage rate and fringe benefits therefor only when all the following criteria have been met:

(i) The work to be performed by the classification requested is not performed by a classification in the wage determination.

(ii) The classification is utilized in the area by the construction industry.

(iii) The proposed wage rate, including any bona fide fringe benefits, bears a reasonable relationship to the wage rates contained in the wage determination.

(2) If the Contractor and the laborers and mechanics to be employed in the classification (if known), or their representatives, and the Contracting Officer agree on the classification and wage rate (including the amount designated for fringe benefits, where appropriate), a report of the action taken shall be sent by the Contracting Officer to the Administrator of the Wage and Hour Division, Employment Standards Administration, U.S. Department of Labor, Washington, DC 20210. The Administrator or an authorized representative will approve, modify, or disapprove every additional classification action within 30 days of receipt and so advise the Contracting Officer or will notify the Contracting Officer within the 30-day period that additional time is necessary.

(3) In the event the Contractor, the laborers or mechanics to be employed in the classification, or their representatives, and the Contracting Officer do not agree on the proposed classification and wage rate (including the amount designated for fringe benefits, where appropriate), the Contracting Officer shall refer the questions, including the views of all interested parties and the recommendation of the Contracting Officer, to the Administrator of the Wage and Hour Division for determination. The Administrator, or an authorized representative, will issue a determination within 30 days of receipt and so advise the Contracting Officer or will notify the Contracting Officer within the 30-day period that additional time is necessary.

(4) The wage rate (including fringe benefits, where appropriate) determined pursuant to subparagraphs (b)(2) and (b)(3) of this clause shall be paid to all workers performing work in the classification under this contract from the first day on which work is performed in the classification.

(c) Whenever the minimum wage rate prescribed in the contract for a class of laborers or mechanics includes a fringe benefit which is not expressed as an hourly rate, the Contractor shall either pay the benefit as stated in the wage determination or shall pay another bona fide fringe benefit or an hourly cash equivalent thereof.

(2) If the Contractor does not make payments to a trustee or other third person, the Contractor may consider as part of the wages of any laborer or mechanic the amount of any costs reasonably anticipated in providing bona fide fringe benefits under a plan or program; provided, That the Secretary of Labor has found, upon the written request of the Contractor, that the applicable standards of the Davis-Bacon Act have been met. The Secretary of Labor may require the Contractor to set aside in a separate account assets for the meeting of obligations under the plan or program.

(End of clause)

52.222-7 WITHHOLDING OF FUNDS (FEB 1988)

The Contracting Officer shall, upon his or her own action or upon written request of an authorized representative of the Department of Labor, withhold or cause to be withheld from the Contractor under this contract or any other Federal contract with the same Prime Contractor, or any other Federally assisted contract subject to Davis-Bacon

prevailing wage requirements, which is held by the same Prime Contractor, so much of the accrued payments or advances as may be considered necessary to pay laborers and mechanics, including apprentices, trainees, and helpers, employed by the Contractor or any subcontractor the full amount of wages required by the contract. In the event of failure to pay any laborer or mechanic, including any apprentice, trainee, or helper, employed or working on the site of the work, all or part of the wages required by the contract, the Contracting Officer may, after written notice to the Contractor, take such action as may be necessary to cause the suspension of any further payment, advance, or guarantee of funds until such violations have ceased.

(End of clause)

52.222-8 PAYROLLS AND BASIC RECORDS (FEB 1988)

(a) Payrolls and basic records relating thereto shall be maintained by the Contractor during the course of the work and preserved for a period of 3 years thereafter for all laborers and mechanics working at the site of the work. Such records shall contain the name, address, and social security number of each such worker, his or her correct classification, hourly rates of wages paid (including rates of contributions or costs anticipated for bona fide fringe benefits or cash equivalents thereof of the types described in section 1(b)(2)(B) of the Davis-Bacon Act), daily and weekly number of hours worked, deductions made, and actual wages paid. Whenever the Secretary of Labor has found, under paragraph (d) of the clause entitled Davis-Bacon Act, that the wages of any laborer or mechanic include the amount of any costs reasonably anticipated in providing benefits under a plan or program described in section 1(b)(2)(B) of the Davis-Bacon Act, the Contractor shall maintain records which show that the commitment to provide such benefits is enforceable, that the plan or program is financially responsible, and that the plan or program has been communicated in writing to the laborers or mechanics affected, and records which show the costs anticipated or the actual cost incurred in providing such benefits. Contractors employing apprentices or trainees under approved programs shall maintain written evidence of the registration of apprenticeship programs and certification of trainee programs, the registration of the apprentices and trainees, and the ratios and wage rates prescribed in the applicable programs.

(b)(1) The Contractor shall submit weekly for each week in which any contract work is performed a copy of all payrolls to the Contracting Officer. The payrolls submitted shall set out accurately and completely all of the information required to be maintained under paragraph (a) of this clause. This information may be submitted in any form desired. Optional Form WH-347 (Federal Stock Number 029-005-00014-1) is available for this purpose and may be purchased from the Superintendent of Documents, U.S. Government Printing Office, Washington, DC 20402. The Prime Contractor is responsible for the submission of copies of payrolls by all subcontractors.

(2) Each payroll submitted shall be accompanied by a "Statement of Compliance," signed by the Contractor or subcontractor or his or her agent who pays or supervises the payment of the persons employed under the contract and shall certify--

(i) That the payroll for the payroll period contains the information required to be maintained under paragraph (a) of this clause and that such information is correct and complete;

(ii) That each laborer or mechanic (including each helper, apprentice, and trainee) employed on the contract during the payroll period has been paid the full weekly wages earned, without rebate, either directly or indirectly, and that no deductions have been made either directly or indirectly from the full wages earned, other than permissible deductions as set forth in the Regulations, 29 CFR Part 3; and

(iii) That each laborer or mechanic has been paid not less than the applicable wage rates and fringe benefits or cash equivalents for the classification of work performed, as specified in the applicable wage determination incorporated into the contract.

(3) The weekly submission of a properly executed certification set forth on the reverse side of Optional Form WH-

347 shall satisfy the requirement for submission of the "Statement of Compliance" required by subparagraph (b)(2) of this clause.

(4) The falsification of any of the certifications in this clause may subject the Contractor or subcontractor to civil or criminal prosecution under Section 1001 of Title 18 and Section 3729 of Title 31 of the United States Code.

(c) The Contractor or subcontractor shall make the records required under paragraph (a) of this clause available for inspection, copying, or transcription by the Contracting Officer or authorized representatives of the Contracting Officer or the Department of Labor. The Contractor or subcontractor shall permit the Contracting Officer or representatives of the Contracting Officer or the Department of Labor to interview employees during working hours on the job. If the Contractor or subcontractor fails to submit required records or to make them available, the Contracting Officer may, after written notice to the Contractor, take such action as may be necessary to cause the suspension of any further payment. Furthermore, failure to submit the required records upon request or to make such records available may be grounds for debarment action pursuant to 29 CFR 5.12.

(End of clause)

52.222-9 APPRENTICES AND TRAINEES (FEB 1988)

(a) Apprentices. Apprentices will be permitted to work at less than the predetermined rate for the work they performed when they are employed pursuant to and individually registered in a bona fide apprenticeship program registered with the U.S. Department of Labor, Employment and Training Administration, Bureau of Apprenticeship and Training, or with a State Apprenticeship Agency recognized by the Bureau, or if a person is employed in his or her first 90 days of probationary employment as an apprentice in such an apprenticeship program, who is not individually registered in the program, but who has been certified by the Bureau of Apprenticeship and Training or a State Apprenticeship Agency (where appropriate) to be eligible for probationary employment as an apprentice. The allowable ratio of apprentices to journeymen on the job site in any craft classification shall not be greater than the ratio permitted to the Contractor as to the entire work force under the registered program. Any worker listed on a payroll at an apprentice wage rate, who is not registered or otherwise employed as stated in this paragraph, shall be paid not less than the applicable wage determination for the classification of work actually performed. In addition, any apprentice performing work on the job site in excess of the ratio permitted under the registered program shall be paid not less than the applicable wage rate on the wage determination for the work actually performed. Where a contractor is performing construction on a project in a locality other than that in which its program is registered, the ratios and wage rates (expressed in percentages of the journeyman's hourly rate) specified in the Contractor's or subcontractor's registered program shall be observed. Every apprentice must be paid at not less than the rate specified in the registered program for the apprentice's level of progress, expressed as a percentage of the journeyman hourly rate specified in the applicable wage determination. Apprentices shall be paid fringe benefits in accordance with the provisions of the apprenticeship program. If the apprenticeship program does not specify fringe benefits, apprentices must be paid the full amount of fringe benefits listed on the wage determination for the applicable classification. If the Administrator determines that a different practice prevails for the applicable apprentice classification, fringes shall be paid in accordance with that determination. In the event the Bureau of Apprenticeship and Training, or a State Apprenticeship Agency recognized by the Bureau, withdraws approval of an apprenticeship program, the Contractor will no longer be permitted to utilize apprentices at less than the applicable predetermined rate for the work performed until an acceptable program is approved.

(b) Trainees. Except as provided in 29 CFR 5.16, trainees will not be permitted to work at less than the predetermined rate for the work performed unless they are employed pursuant to and individually registered in a program which has received prior approval, evidenced by formal certification by the U.S. Department of Labor, Employment and Training Administration. The ratio of trainees to journeymen on the job site shall not be greater than permitted under the plan approved by the Employment and Training Administration. Every trainee must be paid at not less than the rate specified in the approved program for the trainee's level of progress, expressed as a percentage of the journeyman hourly rate specified in the applicable wage determination. Trainees shall be paid

fringe benefits in accordance with the provisions of the trainee program. If the trainee program does not mention fringe benefits, trainees shall be paid the full amount of fringe benefits listed in the wage determination unless the Administrator of the Wage and Hour Division determines that there is an apprenticeship program associated with the corresponding journeyman wage rate in the wage determination which provides for less than full fringe benefits for apprentices. Any employee listed on the payroll at a trainee rate who is not registered and participating in a training plan approved by the Employment and Training Administration shall be paid not less than the applicable wage rate in the wage determination for the classification of work actually performed. In addition, any trainee performing work on the job site in excess of the ratio permitted under the registered program shall be paid not less than the applicable wage rate in the wage determination for the work actually performed. In the event the Employment and Training Administration withdraws approval of a training program, the Contractor will no longer be permitted to utilize trainees at less than the applicable predetermined rate for the work performed until an acceptable program is approved.

(c) Equal employment opportunity. The utilization of apprentices, trainees, and journeymen under this clause shall be in conformity with the equal employment opportunity requirements of Executive Order 11246, as amended, and 29 CFR Part 30.

(End of clause)

52.222-10 COMPLIANCE WITH COPELAND ACT REQUIREMENTS (FEB 1988)

The Contractor shall comply with the requirements of 29 CFR Part 3, which are hereby incorporated by reference in this contract.

(End of clause)

52.222-11 SUBCONTRACTS (LABOR STANDARDS (FEB 1988)

(a) The Contractor or subcontractor shall insert in any subcontracts the clauses entitled Davis-Bacon Act, Contract Work Hours and Safety Standards Act-Overtime Compensation, Apprentices and Trainees, Payrolls and Basic Records, Compliance with Copeland Act Requirements, Withholding of Funds, Subcontracts (Labor Standards), Contract Termination-Debarment, Disputes Concerning Labor Standards, Compliance with Davis-Bacon and Related Act Regulations, and Certification of Eligibility, and such other clauses as the Contracting Officer may, by appropriate instructions, require, and also a clause requiring subcontractors to include these clauses in any lower tier subcontracts. The Prime Contractor shall be responsible for compliance by any subcontractor or lower tier subcontractor with all the contract clauses cited in this paragraph.

(b)(1) Within 14 days after award of the contract, the Contractor shall deliver to the Contracting Officer a completed Statement and Acknowledgment Form (SF 1413) for each subcontract, including the subcontractor's signed and dated acknowledgment that the clauses set forth in paragraph (a) of this clause have been included in the subcontract.

(2) Within 14 days after the award of any subsequently awarded subcontract the Contractor shall deliver to the Contracting Officer an updated completed SF 1413 for such additional subcontract.

(End of clause)

52.222-12 CONTRACT TERMINATION--DEBARMENT (FEB 1988)

A breach of the contract clauses entitled Davis-Bacon Act, Contract Work Hours and Safety Standards Act--Overtime Compensation, Apprentices and Trainees, Payrolls and Basic Records, Compliance with Copeland Act Requirements, Subcontracts (Labor Standards), Compliance with Davis-Bacon and Related Act Regulations, or Certification of Eligibility may be grounds for termination of the contract, and for debarment as a Contractor and subcontractor as provided in 29 CFR 5.12.

(End of clause)

52.222-13 COMPLIANCE WITH DAVIS-BACON AND RELATED ACT REGULATIONS (FEB 1988)

All rulings and interpretations of the Davis-Bacon and Related Acts contained in 29 CFR Parts 1, 3, and 5 are hereby incorporated by reference in this contract.

(End of clause)

52.222-14 DISPUTES CONCERNING LABOR STANDARDS (FEB 1988)

The United States Department of Labor has set forth in 29 CFR Parts 5, 6, and 7 procedures for resolving disputes concerning labor standards requirements. Such disputes shall be resolved in accordance with those procedures and not the Disputes clause of this contract. Disputes within the meaning of this clause include disputes between the Contractor (or any of its subcontractors) and the contracting agency, the U.S. Department of Labor, or the employees or their representatives.

(End of clause)

52.222-15 CERTIFICATION OF ELIGIBILITY (FEB 1988)

(a) By entering into this contract, the Contractor certifies that neither it (nor he or she) nor any person or firm who has an interest in the Contractor's firm is a person or firm ineligible to be awarded Government contracts by virtue of section 3(a) of the Davis-Bacon Act or 29 CFR 5.12(a)(1).

(b) No part of this contract shall be subcontracted to any person or firm ineligible for award of a Government contract by virtue of section 3(a) of the Davis-Bacon Act or 29 CFR 5.12(a)(1).

(3) The penalty for making false statements is prescribed in the U.S. Criminal Code, 18 U.S.C. 1001.

(End of clause)

52.222-21 PROHIBITION OF SEGREGATED FACILITIES (FEB 1999)

(a) Segregated facilities, as used in this clause, means any waiting rooms, work areas, rest rooms and wash rooms, restaurants and other eating areas, time clocks, locker rooms and other storage or dressing areas, parking lots, drinking fountains, recreation or entertainment areas, transportation, and housing facilities provided for employees, that are segregated by explicit directive or are in fact segregated on the basis of race, color, religion, sex, or national

origin because of written or oral policies or employee custom. The term does not include separate or single-user rest rooms or necessary dressing or sleeping areas provided to assure privacy between the sexes.

(b) The Contractor agrees that it does not and will not maintain or provide for its employees any segregated facilities at any of its establishments, and that it does not and will not permit its employees to perform their services at any location under its control where segregated facilities are maintained. The Contractor agrees that a breach of this clause is a violation of the Equal Opportunity clause in this contract.

(c) The Contractor shall include this clause in every subcontract and purchase order that is subject to the Equal Opportunity clause of this contract.

(End of clause)

52.222-26 EQUAL OPPORTUNITY (APR 2002)

(a) Definition. United States, as used in this clause, means the 50 States, the District of Columbia, Puerto Rico, the Northern Mariana Islands, American Samoa, Guam, the U.S. Virgin Islands, and Wake Island.

(b) If, during any 12-month period (including the 12 months preceding the award of this contract), the Contractor has been or is awarded nonexempt Federal contracts and/or subcontracts that have an aggregate value in excess of $10,000, the Contractor shall comply with paragraphs (b)(1) through (b)(11) of this clause, except for work performed outside the United States by employees who were not recruited within the United States. Upon request, the Contractor shall provide information necessary to determine the applicability of this clause.

(1) The Contractor shall not discriminate against any employee or applicant for employment because of race, color, religion, sex, or national origin. However, it shall not be a violation of this clause for the Contractor to extend a publicly announced preference in employment to Indians living on or near an Indian reservation, in connection with employment opportunities on or near an Indian reservation, as permitted by 41 CFR 60-1.5.

(2) The Contractor shall take affirmative action to ensure that applicants are employed, and that employees are treated during employment, without regard to their race, color, religion, sex, or national origin. This shall include, but not be limited to, (i) employment, (ii) upgrading, (iii) demotion, (iv) transfer, (v) recruitment or recruitment advertising, (vi) layoff or termination, (vii) rates of pay or other forms of compensation, and (viii) selection for training, including apprenticeship.

(3) The Contractor shall post in conspicuous places available to employees and applicants for employment the notices to be provided by the Contracting Officer that explain this clause.

(4) The Contractor shall, in all solicitations or advertisements for employees placed by or on behalf of the Contractor, state that all qualified applicants will receive consideration for employment without regard to race, color, religion, sex, or national origin.

(5) The Contractor shall send, to each labor union or representative of workers with which it has a collective bargaining agreement or other contract or understanding, the notice to be provided by the Contracting Officer advising the labor union or workers' representative of the Contractor's commitments under this clause, and post copies of the notice in conspicuous places available to employees and applicants for employment.

(6) The Contractor shall comply with Executive Order 11246, as amended, and the rules, regulations, and orders of the Secretary of Labor.

(7) The Contractor shall furnish to the contracting agency all information required by Executive Order 11246, as amended, and by the rules, regulations, and orders of the Secretary of Labor. The Contractor shall also file Standard

Form 100 (EEO-1), or any successor form, as prescribed in 41 CFR part 60-1. Unless the Contractor has filed within the 12 months preceding the date of contract award, the Contractor shall, within 30 days after contract award, apply to either the regional Office of Federal Contract Compliance Programs (OFCCP) or the local office of the Equal Employment Opportunity Commission for the necessary forms.

(8) The Contractor shall permit access to its premises, during normal business hours, by the contracting agency or the OFCCP for the purpose of conducting on-site compliance evaluations and complaint investigations. The Contractor shall permit the Government to inspect and copy any books, accounts, records (including computerized records), and other material that may be relevant to the matter under investigation and pertinent to compliance with Executive Order 11246, as amended, and rules and regulations that implement the Executive Order.

(9) If the OFCCP determines that the Contractor is not in compliance with this clause or any rule, regulation, or order of the Secretary of Labor, this contract may be canceled, terminated, or suspended in whole or in part and the Contractor may be declared ineligible for further Government contracts, under the procedures authorized in Executive Order 11246, as amended. In addition, sanctions may be imposed and remedies invoked against the Contractor as provided in Executive Order 11246, as amended; in the rules, regulations, and orders of the Secretary of Labor; or as otherwise provided by law.

(10) The Contractor shall include the terms and conditions of subparagraphs (b)(1) through (11) of this clause in every subcontract or purchase order that is not exempted by the rules, regulations, or orders of the Secretary of Labor issued under Executive Order 11246, as amended, so that these terms and conditions will be binding upon each subcontractor or vendor.

(11) The Contractor shall take such action with respect to any subcontract or purchase order as the contracting officer may direct as a means of enforcing these terms and conditions, including sanctions for noncompliance; provided, that if the Contractor becomes involved in, or is threatened with, litigation with a subcontractor or vendor as a result of any direction, the Contractor may request the United States to enter into the litigation to protect the interests of the United States.

(c) Notwithstanding any other clause in this contract, disputes relative to this clause will be governed by the procedures in 41 CFR 60-1.1.

(End of clause)

52.222-27 AFFIRMATIVE ACTION COMPLIANCE REQUIREMENTS FOR CONSTRUCTION (FEB 1999)

(a) Definitions. "Covered area," as used in this clause, means the geographical area described in the solicitation for this contract.

"Deputy Assistant Secretary," as used in this clause, means Deputy Assistant Secretary for Federal Contract Compliance, U.S. Department of Labor, or a designee.

"Employer's identification number," as used in this clause, means the Federal Social Security number used on the employer's quarterly federal tax return, U.S. Treasury Department Form 941.

"Minority," as used in this clause, means--

(1) American Indian or Alaskan Native (all persons having origins in any of the original peoples of North America and maintaining identifiable tribal affiliations through membership and participation or community identification).

(2) Asian and Pacific Islander (all persons having origins in any of the original peoples of the Far East, Southeast Asia, the Indian Subcontinent, or the Pacific Islands);

(3) Black (all persons having origins in any of the black African racial groups not of Hispanic origin); and

(4) Hispanic (all persons of Mexican, Puerto Rican, Cuban, Central or South American, or other Spanish culture or origin, regardless of race).

(b) If the Contractor, or a subcontractor at any tier, subcontracts a portion of the work involving any construction trade, each such subcontract in excess of $10,000 shall include this clause and the Notice containing the goals for minority and female participation stated in the solicitation for this contract.

(c) If the Contractor is participating in a Hometown Plan (41 CFR 60-4) approved by the U.S. Department of Labor in a covered area, either individually or through an association, its affirmative action obligations on all work in the plan area (including goals) shall comply with the plan for those trades that have unions participating in the plan. Contractors must be able to demonstrate participation in, and compliance with, the provisions of the plan. Each Contractor or subcontractor participating in an approved plan is also required to comply with its obligations under the Equal Opportunity clause, and to make a good faith effort to achieve each goal under the plan in each trade in which it has employees. The overall good-faith performance by other Contractors or subcontractors toward a goal in an approved plan does not excuse any Contractor's or subcontractor's failure to make good-faith efforts to achieve the plan's goals.

(d) The Contractor shall implement the affirmative action procedures in subparagraphs (g)(1) through (16) of this clause. The goals stated in the solicitation for this contract are expressed as percentages of the total hours of employment and training of minority and female utilization that the Contractor should reasonably be able to achieve in each construction trade in which it has employees in the covered area. If the Contractor performs construction work in a geographical area located outside of the covered area, it shall apply the goals established for the geographical area where that work is actually performed. The Contractor is expected to make substantially uniform progress toward its goals in each craft.

(e) Neither the terms and conditions of any collective bargaining agreement, nor the failure by a union with which the Contractor has a collective bargaining agreement, to refer minorities or women shall excuse the Contractor's obligations under this clause, Executive Order 11246, as amended, or the regulations thereunder.

(f) In order for the nonworking training hours of apprentices and trainees to be counted in meeting the goals, apprentices and trainees must be employed by the Contractor during the training period, and the Contractor must have made a commitment to employ the apprentices and trainees at the completion of their training, subject to the availability of employment opportunities. Trainees must be trained pursuant to training programs approved by the U.S. Department of Labor.

(g) The Contractor shall take affirmative action to ensure equal employment opportunity. The evaluation of the Contractor's compliance with this clause shall be based upon its effort to achieve maximum results from its actions. The Contractor shall document these efforts fully and implement affirmative action steps at least as extensive as the following:

(1) Ensure a working environment free of harassment, intimidation, and coercion at all sites and in all facilities where the Contractor's employees are assigned to work. The Contractor, if possible, will assign two or more women to each construction project. The Contractor shall ensure that foremen, superintendents, and other onsite supervisory personnel are aware of and carry out the Contractor's obligation to maintain such a working environment, with specific attention to minority or female individuals working at these sites or facilities.

(2) Establish and maintain a current list of sources for minority and female recruitment. Provide written notification to minority and female recruitment sources and community organizations when the Contractor or its unions have employment opportunities available, and maintain a record of the organizations' responses.

(3) Establish and maintain a current file of the names, addresses, and telephone numbers of each minority and

female off-the-street applicant, referrals of minorities or females from unions, recruitment sources, or community organizations, and the action taken with respect to each individual. If an individual was sent to the union hiring hall for referral and not referred back to the Contractor by the union or, if referred back, not employed by the Contractor, this shall be documented in the file, along with whatever additional actions the Contractor may have taken.

(4) Immediately notify the Deputy Assistant Secretary when the union or unions with which the Contractor has a collective bargaining agreement has not referred back to the Contractor a minority or woman sent by the Contractor, or when the Contractor has other information that the union referral process has impeded the Contractor's efforts to meet its obligations.

(5) Develop on-the-job training opportunities and/or participate in training programs for the area that expressly include minorities and women, including upgrading programs and apprenticeship and trainee programs relevant to the Contractor's employment needs, especially those programs funded or approved by the Department of Labor. The Contractor shall provide notice of these programs to the sources compiled under subparagraph (g)(2) of this clause.

(6) Disseminate the Contractor's equal employment policy by--

(i) Providing notice of the policy to unions and to training, recruitment, and outreach programs, and requesting their cooperation in assisting the Contractor in meeting its contract obligations;

(ii) Including the policy in any policy manual and in collective bargaining agreements;

(iii) Publicizing the policy in the company newspaper, annual report, etc.;

(iv) Reviewing the policy with all management personnel and with all minority and female employees at least once a year; and

(v) Posting the policy on bulletin boards accessible to employees at each location where construction work is performed.

(7) Review, at least annually, the Contractor's equal employment policy and affirmative action obligations with all employees having responsibility for hiring, assignment, layoff, termination, or other employment decisions. Conduct review of this policy with all on-site supervisory personnel before initiating construction work at a job site. A written record shall be made and maintained identifying the time and place of these meetings, persons attending, subject matter discussed, and disposition of the subject matter.

(8) Disseminate the Contractor's equal employment policy externally by including it in any advertising in the news media, specifically including minority and female news media. Provide written notification to, and discuss this policy with, other Contractors and subcontractors with which the Contractor does or anticipates doing business.

(9) Direct recruitment efforts, both oral and written, to minority, female, and community organizations, to schools with minority and female students, and to minority and female recruitment and training organizations serving the Contractor's recruitment area and employment needs. Not later than 1 month before the date for acceptance of applications for apprenticeship or training by any recruitment source, send written notification to organizations such as the above, describing the openings, screening procedures, and tests to be used in the selection process.

(10) Encourage present minority and female employees to recruit minority persons and women. Where reasonable, provide after-school, summer, and vacation employment to minority and female youth both on the site and in other areas of the Contractor's workforce.

(11) Validate all tests and other selection requirements where required under 41 CFR 60-3.

(12) Conduct, at least annually, an inventory and evaluation at least of all minority and female personnel for

promotional opportunities. Encourage these employees to seek or to prepare for, through appropriate training, etc., opportunities for promotion.

(13) Ensure that seniority practices, job classifications, work assignments, and other personnel practices do not have a discriminatory effect by continually monitoring all personnel and employment-related activities to ensure that the Contractor's obligations under this contract are being carried out.

(14) Ensure that all facilities and company activities are nonsegregated except that separate or single-user rest rooms and necessary dressing or sleeping areas shall be provided to assure privacy between the sexes.

(15) Maintain a record of solicitations for subcontracts for minority and female construction contractors and suppliers, including circulation of solicitations to minority and female contractor associations and other business associations.

(16) Conduct a review, at least annually, of all supervisors' adherence to and performance under the Contractor's equal employment policy and affirmative action obligations.

(h) The Contractor is encouraged to participate in voluntary associations that may assist in fulfilling one or more of the affirmative action obligations contained in subparagraphs (g)(1) through (16) of this clause. The efforts of a contractor association, joint contractor-union, contractor-community, or similar group of which the contractor is a member and participant may be asserted as fulfilling one or more of its obligations under subparagraphs (g)(1) through (16) of this clause, provided the Contractor--

(1) Actively participates in the group;

(2) Makes every effort to ensure that the group has a positive impact on the employment of minorities and women in the industry;

(3) Ensures that concrete benefits of the program are reflected in the Contractor's minority and female workforce participation;

(4) Makes a good-faith effort to meet its individual goals and timetables; and

(5) Can provide access to documentation that demonstrates the effectiveness of actions taken on behalf of the Contractor. The obligation to comply is the Contractor's, and failure of such a group to fulfill an obligation shall not be a defense for the Contractor's noncompliance.

(i) A single goal for minorities and a separate single goal for women shall be established. The Contractor is required to provide equal employment opportunity and to take affirmative action for all minority groups, both male and female, and all women, both minority and nonminority. Consequently, the Contractor may be in violation of Executive Order 11246, as amended, if a particular group is employed in a substantially disparate manner.

(j) The Contractor shall not use goals or affirmative action standards to discriminate against any person because of race, color, religion, sex, or national origin.

(k) The Contractor shall not enter into any subcontract with any person or firm debarred from Government contracts under Executive Order 11246, as amended.

(l) The Contractor shall carry out such sanctions and penalties for violation of this clause and of the Equal Opportunity clause, including suspension, termination, and cancellation of existing subcontracts, as may be imposed or ordered under Executive Order 11246, as amended, and its implementing regulations, by the OFCCP. Any failure to carry out these sanctions and penalties as ordered shall be a violation of this clause and Executive Order 11246, as amended.

(m) The Contractor in fulfilling its obligations under this clause shall implement affirmative action procedures at least as extensive as those prescribed in paragraph (g) of this clause, so as to achieve maximum results from its efforts to ensure equal employment opportunity. If the Contractor fails to comply with the requirements of Executive Order 11246, as amended, the implementing regulations, or this clause, the Deputy Assistant Secretary shall take action as prescribed in 41 CFR 60-4.8.

(n) The Contractor shall designate a responsible official to--

(1) Monitor all employment-related activity to ensure that the Contractor's equal employment policy is being carried out;

(2) Submit reports as may be required by the Government; and

(3) Keep records that shall at least include for each employee the name, address, telephone number, construction trade, union affiliation (if any), employee identification number, social security number, race, sex, status (e.g., mechanic, apprentice, trainee, helper, or laborer), dates of changes in status, hours worked per week in the indicated trade, rate of pay, and locations at which the work was performed. Records shall be maintained in an easily understandable and retrievable form; however, to the degree that existing records satisfy this requirement, separate records are not required to be maintained.

Nothing contained herein shall be construed as a limitation upon the application of other laws that establish different standards of compliance or upon the requirements for the hiring of local or other area residents (e.g., those under the Public Works Employment Act of 1977 and the Community Development Block Grant Program).

(End of clause)

52.222-35 EQUAL OPPORTUNITY FOR SPECIAL DISABLED VETERANS, VETERANS OF THE VIETNAM ERA AND OTHER ELIGIBLE VETERANS (DEC 2001) ALTERNATE I (DEC 2001)

Notice: The following term(s) of this clause are waived for this contract: [List term(s)].

(a) Definitions. As used in this clause--

All employment openings means all positions except executive and top management, those positions that will be filled from within the Contractor's organization, and positions lasting 3 days or less. This term includes full-time employment, temporary employment of more than 3 days duration, and part-time employment.

Executive and top management means any employee--

(1) Whose primary duty consists of the management of the enterprise in which the individual is employed or of a customarily recognized department or subdivision thereof;

(2) Who customarily and regularly directs the work of two or more other employees;

(3) Who has the authority to hire or fire other employees or whose suggestions and recommendations as to the hiring or firing and as to the advancement and promotion or any other change of status of other employees will be given particular weight;

(4) Who customarily and regularly exercises discretionary powers; and

(5) Who does not devote more than 20 percent or, in the case of an employee of a retail or service establishment, who does not devote more than 40 percent of total hours of work in the work week to activities that are not directly

and closely related to the performance of the work described in paragraphs (1) through (4) of this definition. This paragraph (5) does not apply in the case of an employee who is in sole charge of an establishment or a physically separated branch establishment, or who owns at least a 20 percent interest in the enterprise in which the individual is employed.

Other eligible veteran means any other veteran who served on active duty during a war or in a campaign or expedition for which a campaign badge has been authorized.

Positions that will be filled from within the Contractor's organization means employment openings for which the Contractor will give no consideration to persons outside the Contractor's organization (including any affiliates, subsidiaries, and parent companies) and includes any openings the Contractor proposes to fill from regularly established “recall” lists. The exception does not apply to a particular opening once an employer decides to consider applicants outside of its organization.

Qualified special disabled veteran means a special disabled veteran who satisfies the requisite skill, experience, education, and other job-related requirements of the employment position such veteran holds or desires, and who, with or without reasonable accommodation, can perform the essential functions of such position.

Special disabled veteran means--

(1) A veteran who is entitled to compensation (or who but for the receipt of military retired pay would be entitled to compensation) under laws administered by the Department of Veterans Affairs for a disability--

(i) Rated at 30 percent or more; or

(ii) Rated at 10 or 20 percent in the case of a veteran who has been determined under 38 U.S.C. 3106 to have a serious employment handicap (i.e., a significant impairment of the veteran's ability to prepare for, obtain, or retain employment consistent with the veteran's abilities, aptitudes, and interests); or

(2) A person who was discharged or released from active duty because of a service-connected disability.

Veteran of the Vietnam era means a person who--

(1) Served on active duty for a period of more than 180 days and was discharged or released from active duty with other than a dishonorable discharge, if any part of such active duty occurred--

(i) In the Republic of Vietnam between February 28, 1961, and May 7, 1975; or

(ii) Between August 5, 1964, and May 7, 1975, in all other cases; or

(2) Was discharged or released from active duty for a service-connected disability if any part of the active duty was performed--

(i) In the Republic of Vietnam between February 28, 1961, and May 7, 1975; or

(ii) Between August 5, 1964, and May 7, 1975, in all other cases.
(b) General. (1) The Contractor shall not discriminate against the individual because the individual is a special disabled veteran, a veteran of the Vietnam era, or other eligible veteran, regarding any position for which the employee or applicant for employment is qualified. The Contractor shall take affirmative action to employ, advance in employment, and otherwise treat qualified special disabled veterans, veterans of the Vietnam era, and other eligible veterans without discrimination based upon their disability or veterans' status in all employment practices such as--

(i) Recruitment, advertising, and job application procedures;

(ii) Hiring, upgrading, promotion, award of tenure, demotion, transfer, layoff, termination, right of return from layoff and rehiring;

(iii) Rate of pay or any other form of compensation and changes in compensation;

(iv) Job assignments, job classifications, organizational structures, position descriptions, lines of progression, and seniority lists;

(v) Leaves of absence, sick leave, or any other leave;

(vi) Fringe benefits available by virtue of employment, whether or not administered by the Contractor;

(vii) Selection and financial support for training, including apprenticeship, and on-the-job training under 38 U.S.C. 3687, professional meetings, conferences, and other related activities, and selection for leaves of absence to pursue training;

(viii) Activities sponsored by the Contractor including social or recreational programs; and

(ix) Any other term, condition, or privilege of employment.

(2) The Contractor shall comply with the rules, regulations, and relevant orders of the Secretary of Labor issued under the Vietnam Era Veterans' Readjustment Assistance Act of 1972 (the Act), as amended (38 U.S.C. 4211 and 4212).

(c) Listing openings. (1) The Contractor shall immediately list all employment openings that exist at the time of the execution of this contract and those which occur during the performance of this contract, including those not generated by this contract, and including those occurring at an establishment of the Contractor other than the one where the contract is being performed, but excluding those of independently operated corporate affiliates, at an appropriate local public employment service office of the State wherein the opening occurs. Listing employment openings with the U.S. Department of Labor's America's Job Bank shall satisfy the requirement to list jobs with the local employment service office.

(2) The Contractor shall make the listing of employment openings with the local employment service office at least concurrently with using any other recruitment source or effort and shall involve the normal obligations of placing a bona fide job order, including accepting referrals of veterans and nonveterans. This listing of employment openings does not require hiring any particular job applicant or hiring from any particular group of job applicants and is not intended to relieve the Contractor from any requirements of Executive orders or regulations concerning nondiscrimination in employment.

(3) Whenever the Contractor becomes contractually bound to the listing terms of this clause, it shall advise the State public employment agency in each State where it has establishments of the name and location of each hiring location in the State. As long as the Contractor is contractually bound to these terms and has so advised the State agency, it need not advise the State agency of subsequent contracts. The Contractor may advise the State agency when it is no longer bound by this contract clause.

(d) Applicability. This clause does not apply to the listing of employment openings that occur and are filled outside the 50 States, the District of Columbia, the Commonwealth of Puerto Rico, the Commonwealth of the Northern Mariana Islands, American Samoa, Guam, the Virgin Islands of the United States, and Wake Island.

(e) Postings. (1) The Contractor shall post employment notices in conspicuous places that are available to employees and applicants for employment.

(2) The employment notices shall--

(i) State the rights of applicants and employees as well as the Contractor's obligation under the law to take affirmative action to employ and advance in employment qualified employees and applicants who are special disabled veterans, veterans of the Vietnam era, and other eligible veterans; and

(ii) Be in a form prescribed by the Deputy Assistant Secretary for Federal Contract Compliance Programs, Department of Labor (Deputy Assistant Secretary of Labor), and provided by or through the Contracting Officer.

(3) The Contractor shall ensure that applicants or employees who are special disabled veterans are informed of the contents of the notice (e.g., the Contractor may have the notice read to a visually disabled veteran, or may lower the posted notice so that it can be read by a person in a wheelchair).

(4) The Contractor shall notify each labor union or representative of workers with which it has a collective bargaining agreement, or other contract understanding, that the Contractor is bound by the terms of the Act and is committed to take affirmative action to employ, and advance in employment, qualified special disabled veterans, veterans of the Vietnam era, and other eligible veterans.

(f) Noncompliance. If the Contractor does not comply with the requirements of this clause, the Government may take appropriate actions under the rules, regulations, and relevant orders of the Secretary of Labor issued pursuant to the Act.

(g) Subcontracts. The Contractor shall insert the terms of this clause in all subcontracts or purchase orders of $25,000 or more unless exempted by rules, regulations, or orders of the Secretary of Labor. The Contractor shall act as specified by the Deputy Assistant Secretary of Labor to enforce the terms, including action for noncompliance.

(End of clause)

52.222-36 AFFIRMATIVE ACTION FOR WORKERS WITH DISABILITIES (JUN 1998)

(a) General. (1) Regarding any position for which the employee or applicant for employment is qualified, the Contractor shall not discriminate against any employee or applicant because of physical or mental disability. The Contractor agrees to take affirmative action to employ, advance in employment, and otherwise treat qualified individuals with disabilities without discrimination based upon their physical or mental disability in all employment practices such as--

(i) Recruitment, advertising, and job application procedures;

(ii) Hiring, upgrading, promotion, award of tenure, demotion, transfer, layoff, termination, right of return from layoff, and rehiring;

(iii) Rates of pay or any other form of compensation and changes in compensation;

(iv) Job assignments, job classifications, organizational structures, position descriptions, lines of progression, and seniority lists;

(v) Leaves of absence, sick leave, or any other leave;

(vi) Fringe benefits available by virtue of employment, whether or not administered by the Contractor;

(vii) Selection and financial support for training, including apprenticeships, professional meetings, conferences, and other related activities, and selection for leaves of absence to pursue training;

(viii) Activities sponsored by the Contractor, including social or recreational programs; and

(ix) Any other term, condition, or privilege of employment.

(2) The Contractor agrees to comply with the rules, regulations, and relevant orders of the Secretary of Labor (Secretary) issued under the Rehabilitation Act of 1973 (29 U.S.C. 793) (the Act), as amended.

(b) Postings. (1) The Contractor agrees to post employment notices stating--

(i) The Contractor's obligation under the law to take affirmative action to employ and advance in employment qualified individuals with disabilities; and

(ii) The rights of applicants and employees.

(2) These notices shall be posted in conspicuous places that are available to employees and applicants for employment. The Contractor shall ensure that applicants and employees with disabilities are informed of the contents of the notice (e.g., the Contractor may have the notice read to a visually disabled individual, or may lower the posted notice so that it might be read by a person in a wheelchair). The notices shall be in a form prescribed by the Deputy Assistant Secretary for Federal Contract Compliance of the U.S. Department of Labor (Deputy Assistant Secretary) and shall be provided by or through the Contracting Officer.

(3) The Contractor shall notify each labor union or representative of workers with which it has a collective bargaining agreement or other contract understanding, that the Contractor is bound by the terms of Section 503 of the Act and is committed to take affirmative action to employ, and advance in employment, qualified individuals with physical or mental disabilities.

(c) Noncompliance. If the Contractor does not comply with the requirements of this clause, appropriate actions may be taken under the rules, regulations, and relevant orders of the Secretary issued pursuant to the Act.

(d) Subcontracts. The Contractor shall include the terms of this clause in every subcontract or purchase order in excess of $10,000 unless exempted by rules, regulations, or orders of the Secretary. The Contractor shall act as specified by the Deputy Assistant Secretary to enforce the terms, including action for noncompliance.

(End of clause)

52.222-37 EMPLOYMENT REPORTS ON SPECIAL DISABLED VETERANS, VETERANS OF THE VIETNAM ERA, AND OTHER ELIGIBLE VETERANS (DEC 2001)

(a) Unless the Contractor is a State or local government agency, the Contractor shall report at least annually, as required by the Secretary of Labor, on--

(1) The number of disabled veterans and the number of veterans of the Vietnam era in the workforce of the contractor by job category and hiring location; and

(2) The total number of new employees hired during the period covered by the report, and of that total, the number of disabled veterans, and the number of veterans of the Vietnam era.

(b) The above items shall be reported by completing the form entitled "Federal Contractor Veterans' Employment Report VETS-100."

(c) Reports shall be submitted no later than September 30 of each year beginning September 30, 1988.

(d) The employment activity report required by paragraph (a)(2) of this clause shall reflect total hires during the most recent 12-month period as of the ending date selected for the employment profile report required by paragraph (a)(1) of this clause. Contractors may select an ending date: (1) As of the end of any pay period during the period January through March 1st of the year the report is due, or (2) as of December 31, if the contractor has previous written approval from the Equal Employment Opportunity Commission to do so for purposes of submitting the Employer Information Report EEO-1 (Standard Form 100).

(e) The count of veterans reported according to paragraph (a) of this clause shall be based on voluntary disclosure. Each Contractor subject to the reporting requirements at 38 U.S.C. 4212 shall invite all disabled veterans and veterans of the Vietnam era who wish to benefit under the affirmative action program at 38 U.S.C. 4212 to identify themselves to the Contractor. The invitation shall state that the information is voluntarily provided; that the information will be kept confidential; that disclosure or refusal to provide the information will not subject the applicant or employee to any adverse treatment; and that the information will be used only in accordance with the regulations promulgated under 38 U.S.C. 4212.

(f) Subcontracts. The Contractor shall include the terms of this clause in every subcontract or purchase order of $10,000 or more unless exempted by rules, regulations, or orders of the Secretary.

(End of clause)

52.223-3 HAZARDOUS MATERIAL IDENTIFICATION AND MATERIAL SAFETY DATA (JAN 1997)

(a) "Hazardous material", as used in this clause, includes any material defined as hazardous under the latest version of Federal Standard No. 313 (including revisions adopted during the term of the contract).

(b) The offeror must list any hazardous material, as defined in paragraph (a) of this clause, to be delivered under this contract. The hazardous material shall be properly identified and include any applicable identification number, such as National Stock Number or Special Item Number. This information shall also be included on the Material Safety Data Sheet submitted under this contract.

Material (If none, insert "None")	Identification No.
_____	_____
_____	_____
_____	_____

(c) This list must be updated during performance of the contract whenever the Contractor determines that any other material to be delivered under this contract is hazardous.

(d) The apparently successful offeror agrees to submit, for each item as required prior to award, a Material Safety Data Sheet, meeting the requirements of 29 CFR 1910.1200(g) and the latest version of Federal Standard No. 313, for all hazardous material identified in paragraph (b) of this clause. Data shall be submitted in accordance with Federal Standard No. 313, whether or not the apparently successful offeror is the actual manufacturer of these items. Failure to submit the Material Safety Data Sheet prior to award may result in the apparently successful offeror being considered nonresponsible and ineligible for award.

(e) If, after award, there is a change in the composition of the item(s) or a revision to Federal Standard No. 313, which renders incomplete or inaccurate the data submitted under paragraph (d) of this clause, the Contractor shall

promptly notify the Contracting Officer and resubmit the data.

(f) Neither the requirements of this clause nor any act or failure to act by the Government shall relieve the Contractor of any responsibility or liability for the safety of Government, Contractor, or subcontractor personnel or property.

(g) Nothing contained in this clause shall relieve the Contractor from complying with applicable Federal, State, and local laws, codes, ordinances, and regulations (including the obtaining of licenses and permits) in connection with hazardous material.

(h) The Government's rights in data furnished under this contract with respect to hazardous material are as follows:

(1) To use, duplicate and disclose any data to which this clause is applicable. The purposes of this right are to--

(i) Apprise personnel of the hazards to which they may be exposed in using, handling, packaging, transporting, or disposing of hazardous materials;

(ii) Obtain medical treatment for those affected by the material; and

(iii) Have others use, duplicate, and disclose the data for the Government for these purposes.

(2) To use, duplicate, and disclose data furnished under this clause, in accordance with subparagraph (h)(1) of this clause, in precedence over any other clause of this contract providing for rights in data.

(3) The Government is not precluded from using similar or identical data acquired from other sources.

(End of clause)

52.223-5 POLLUTION PREVENTION AND RIGHT-TO-KNOW INFORMATION (AUG 2003)

(a) Definitions. As used in this clause--

Priority chemical means a chemical identified by the Interagency Environmental Leadership Workgroup or, alternatively, by an agency pursuant to section 503 of Executive Order 13148 of April 21, 2000, Greening the Government through Leadership in Environmental Management.

“Toxic chemical means a chemical or chemical category listed in 40 CFR 372.65.”

(b) Executive Order 13148 requires Federal facilities to comply with the provisions of the Emergency Planning and Community Right-to-Know Act of 1986 (EPCRA) (42 U.S.C. 11001-11050) and the Pollution Prevention Act of 1990 (PPA) (42 U.S.C. 13101-13109).

(c) The Contractor shall provide all information needed by the Federal facility to comply with the following:

(1) The emergency planning reporting requirements of section 302 of EPCRA.

(2) The emergency notice requirements of section 304 of EPCRA.

(3) The list of Material Safety Data Sheets, required by section 311 of EPCRA.

(4) The emergency and hazardous chemical inventory forms of section 312 of EPCRA.

(5) The toxic chemical release inventory of section 313 of EPCRA, which includes the reduction and recycling information required by section 6607 of PPA.

(6) The toxic chemical, priority chemical, and hazardous substance release and use reduction goals of sections 502 and 503 of Executive Order 13148.

(End of clause)

52.223-6 DRUG-FREE WORKPLACE (MAY 2001)

(a) Definitions. As used in this clause --

"Controlled substance" means a controlled substance in schedules I through V of section 202 of the Controlled Substances Act (21 U.S.C. 812) and as further defined in regulation at 21 CFR 1308.11 - 1308.15.

"Conviction" means a finding of guilt (including a plea of nolo contendere) or imposition of sentence, or both, by any judicial body charged with the responsibility to deter- mine violations of the Federal or State criminal drug statutes.

"Criminal drug statute" means a Federal or non-Federal criminal statute involving the manufacture, distribution, dispensing, possession, or use of any controlled substance.

"Drug-free workplace" means the site(s) for the performance of work done by the Contractor in connection with a specific contract at which employees of the Contractor are prohibited from engaging in the unlawful manufacture, distribution, dispensing, possession, or use of a controlled substance.

"Employee" means an employee of a Contractor directly engaged in the performance of work under a Government contract. "Directly engaged" is defined to include all direct cost employees and any other Contractor employee who has other than a minimal impact or involvement in contract performance.

"Individual" means an offeror/contractor that has no more than one employee including the offeror/contractor.

(b) The Contractor, if other than an individual, shall-- within 30 days after award (unless a longer period is agreed to in writing for contracts of 30 days or more performance duration), or as soon as possible for contracts of less than 30 days performance duration--

(1) Publish a statement notifying its employees that the unlawful manufacture, distribution, dispensing, possession, or use of a controlled substance is prohibited in the Contractor's workplace and specifying the actions that will be taken against employees for violations of such prohibition;

(2) Establish an ongoing drug-free awareness program to inform such employees about--

(i) The dangers of drug abuse in the workplace;

(ii) The Contractor's policy of maintaining a drug-free workplace;

(iii) Any available drug counseling, rehabilitation, and employee assistance programs; and

(iv) The penalties that may be imposed upon employees for drug abuse violations occurring in the workplace;

(3) Provide all employees engaged in performance of the contract with a copy of the statement required by subparagraph (b)(1) of this clause;

(4) Notify such employees in writing in the statement required by subparagraph (b)(1) of this clause that, as a condition of continued employment on this contract, the employee will--

(i) Abide by the terms of the statement; and

(ii) Notify the employer in writing of the employee's conviction under a criminal drug statute for a violation occurring in the workplace no later than 5 days after such conviction.

(5) Notify the Contracting Officer in writing within 10 days after receiving notice under subdivision (b)(4)(ii) of this clause, from an employee or otherwise receiving actual notice of such conviction. The notice shall include the position title of the employee;

(6) Within 30 days after receiving notice under subdivision (b)(4)(ii) of this clause of a conviction, take one of the following actions with respect to any employee who is convicted of a drug abuse violation occurring in the workplace:

(i) Taking appropriate personnel action against such employee, up to and including termination; or

(ii) Require such employee to satisfactorily participate in a drug abuse assistance or rehabilitation program approved for such purposes by a Federal, State, or local health, law enforcement, or other appropriate agency; and

(7) Make a good faith effort to maintain a drug-free workplace through implementation of subparagraphs (b)(1) though (b)(6) of this clause.

(c) The Contractor, if an individual, agrees by award of the contract or acceptance of a purchase order, not to engage in the unlawful manufacture, distribution, dispensing, possession, or use of a controlled substance while performing this contract.

(d) In addition to other remedies available to the Government, the Contractor's failure to comply with the requirements of paragraph (b) or (c) of this clause may, pursuant to FAR 23.506, render the Contractor subject to suspension of contract payments, termination of the contract for default, and suspension or debarment.

(End of clause)

52.223-14 TOXIC CHEMICAL RELEASE REPORTING (AUG 2003)

(a) Unless otherwise exempt, the Contractor, as owner or operator of a facility used in the performance of this contract, shall file by July 1 for the prior calendar year an annual Toxic Chemical Release Inventory Form (Form R) as described in sections 313(a) and (g) of the Emergency Planning and Community Right-to-Know Act of 1986 (EPCRA) (42 U.S.C. 11023(a) and (g)), and section 6607 of the Pollution Prevention Act of 1990 (PPA) (42 U.S.C. 13106). The Contractor shall file, for each facility subject to the Form R filing and reporting requirements, the annual Form R throughout the life of the contract.

(b) A Contractor-owned or -operated facility used in the performance of this contract is exempt from the requirement to file an annual Form R if--

(1) The facility does not manufacture, process, or otherwise use any toxic chemicals listed in 40 CFR 372.65;

(2) The facility does not have 10 or more full-time employees as specified in section 313(b)(1)(A) of EPCRA, 42 U.S.C. 11023(b)(1)(A);

(3) The facility does not meet the reporting thresholds of toxic chemicals established under of EPCRA, 42 U.S.C. 11023(f) (including the alternate thresholds at 40 CFR 372.27, provided an appropriate certification form has been filed with EPA);

(4) The facility does not fall within the following Standard Industrial Classification (SIC) codes or their corresponding North American Industry Classification System sectors:

(i) Major group code 10 (except 1011, 1081, and 1094.

(ii) Major group code 12 (except 1241).

(iii) Major group codes 20 through 39.

(iv) Industry code 4911, 4931, or 4939 (limited to facilities that combust coal and/or oil for the purpose of generating power for distribution in commerce).

(v) Industry code 4953 (limited to facilities regulated under the Resource Conservation and Recovery Act, Subtitle C (42 U.S.C. 6921, et seq.)), 5169, 5171, or 7389 (limited to facilities primarily engaged in solvent recovery services on a contract or fee basis); or

(5) The facility is not located in the United States or its outlying areas.

(c) If the Contractor has certified to an exemption in accordance with one or more of the criteria in paragraph (b) of this clause, and after award of the contract circumstances change so that any of its owned or operated facilities used in the performance of this contract is no longer exempt--

(1) The Contractor shall notify the Contracting Officer; and

(2) The Contractor, as owner or operator of a facility used in the performance of this contract that is no longer exempt, shall (i) submit a Toxic Chemical Release Inventory Form (Form R) on or before July 1 for the prior calendar year during which the facility becomes eligible; and (ii) continue to file the annual Form R for the life of the contract for such facility.

(d) The Contracting Officer may terminate this contract or take other action as appropriate, if the Contractor fails to comply accurately and fully with the EPCRA and PPA toxic chemical release filing and reporting requirements.

(e) Except for acquisitions of commercial items, as defined in FAR Part 2, the Contractor shall--

(1) For competitive subcontracts expected to exceed $100,000 (including all options), include a solicitation provision substantially the same as the provision at FAR 52.223-13, Certification of Toxic Chemical Release Reporting; and

(2) Include in any resultant subcontract exceeding $100,000 (including all options), the substance of this clause, except this paragraph (e).

(End of clause)

52.225-9 BUY AMERICAN ACT—CONSTRUCTION MATERIALS (JUN 2003)

(a) Definitions. As used in this clause--

Component means an article, material, or supply incorporated directly into a construction material.

Construction material means an article, material, or supply brought to the construction site by the Contractor or a subcontractor for incorporation into the building or work. The term also includes an item brought to the site preassembled from articles, materials, or supplies. However, emergency life safety systems, such as emergency lighting, fire alarm, and audio evacuation systems, that are discrete systems incorporated into a public building or work and that are produced as complete systems, are evaluated as a single and distinct construction material regardless of when or how the individual parts or components of those systems are delivered to the construction site. Materials purchased directly by the Government are supplies, not construction material.

Cost of components means--

(1) For components purchased by the Contractor, the acquisition cost, including transportation costs to the place of incorporation into the construction material (whether or not such costs are paid to a domestic firm), and any applicable duty (whether or not a duty-free entry certificate is issued); or

(2) For components manufactured by the Contractor, all costs associated with the manufacture of the component, including transportation costs as described in paragraph (1) of this definition, plus allocable overhead costs, but excluding profit. Cost of components does not include any costs associated with the manufacture of the end product.

Domestic construction material means--

(1) An unmanufactured construction material mined or produced in the United States; or

(2) A construction material manufactured in the United States, if the cost of its components mined, produced, or manufactured in the United States exceeds 50 percent of the cost of all its components. Components of foreign origin of the same class or kind for which nonavailability determinations have been made are treated as domestic.

Foreign construction material means a construction material other than a domestic construction material.

United States means the 50 States, the District of Columbia, and outlying areas.

(b) Domestic preference. (1) This clause implements the Buy American Act (41 U.S.C. 10a-10d) by providing a preference for domestic construction material. The Contractor shall use only domestic construction material in performing this contract, except as provided in paragraphs (b)(2) and (b)(3) of this clause.

(2) This requirement does not apply to the construction material or components listed by the Government as follows: [Contracting Officer to list applicable excepted materials or indicate “none”]

(3) The Contracting Officer may add other foreign construction material to the list in paragraph (b)(2) of this clause if the Government determines that

(i) The cost of domestic construction material would be unreasonable. The cost of a particular domestic construction material subject to the requirements of the Buy American Act is unreasonable when the cost of such material exceeds the cost of foreign material by more than 6 percent;

(ii) The application of the restriction of the Buy American Act to a particular construction material would be impracticable or inconsistent with the public interest; or

(iii) The construction material is not mined, produced, or manufactured in the United States in sufficient and reasonably available commercial quantities of a satisfactory quality.

(c) Request for determination of inapplicability of the Buy American Act. (1)(i) Any Contractor request to use foreign construction material in accordance with paragraph (b)(3) of this clause shall include adequate information for Government evaluation of the request, including--

(A) A description of the foreign and domestic construction materials;

(B) Unit of measure;

(C) Quantity;

(D) Price;

(E) Time of delivery or availability;

(F) Location of the construction project;

(G) Name and address of the proposed supplier; and

(H) A detailed justification of the reason for use of foreign construction materials cited in accordance with paragraph (b)(3) of this clause.

(ii) A request based on unreasonable cost shall include a reasonable survey of the market and a completed price comparison table in the format in paragraph (d) of this clause.

(iii) The price of construction material shall include all delivery costs to the construction site and any applicable duty (whether or not a duty-free certificate may be issued).

(iv) Any Contractor request for a determination submitted after contract award shall explain why the Contractor could not reasonably foresee the need for such determination and could not have requested the determination before contract award. If the Contractor does not submit a satisfactory explanation, the Contracting Officer need not make a determination.

(2) If the Government determines after contract award that an exception to the Buy American Act applies and the Contracting Officer and the Contractor negotiate adequate consideration, the Contracting Officer will modify the contract to allow use of the foreign construction material. However, when the basis for the exception is the unreasonable price of a domestic construction material, adequate consideration is not less than the differential established in paragraph (b)(3)(i) of this clause.

(3) Unless the Government determines that an exception to the Buy American Act applies, use of foreign construction material is noncompliant with the Buy American Act.

(d) Data. To permit evaluation of requests under paragraph (c) of this clause based on unreasonable cost, the Contractor shall include the following information and any applicable supporting data based on the survey of suppliers:

Foreign and Domestic Construction Materials Price Comparison

Construction material description	Unit of measure	Quantity	Price (dollars) \1\
Item 1			
Foreign construction material....	.....	.....	.....
Domestic construction material...	.....	.....	.....
Item 2			
Foreign construction material....	.....	.....	.....

Domestic construction material... ....

Include all delivery costs to the construction site and any applicable duty (whether or not a duty-free entry certificate is issued).
List name, address, telephone number, and contact for suppliers surveyed. Attach copy of response; if oral, attach summary.
Include other applicable supporting information.

(End of clause)

52.225-13 RESTRICTIONS ON CERTAIN FOREIGN PURCHASES (DEC 2003)

(a) Except as authorized by the Office of Foreign Assets Control (OFAC) in the Department of the Treasury, the Contractor shall not acquire, for use in the performance of this contract, any supplies or services if any proclamation, Executive order, or statute administered by OFAC, or if OFAC's implementing regulations at 31 CFR chapter V, would prohibit such a transaction by a person subject to the jurisdiction of the United States.

(b) Except as authorized by OFAC, most transactions involving Cuba, Iran, Libya, and Sudan are prohibited, as are most imports from North Korea, into the United States or its outlying areas. Lists of entities and individuals subject to economic sanctions are included in OFAC's List of Specially Designated Nationals and Blocked Persons at TerList1.html. More information about these restrictions, as well as updates, is available in the OFAC's regulations at 31 CFR chapter V and/or on OFAC's Web site at http://www.treas.gov/ofac.

(c) The Contractor shall insert this clause, including this paragraph (c), in all subcontracts.

(End of clause)

52.226-1 UTILIZATION OF INDIAN ORGANIZATIONS AND INDIAN-OWNED ECONOMIC ENTERPRISES (JUN 2000)

(a) Definitions. As used in this clause:

"Indian" means any person who is a member of any Indian tribe, band, group, pueblo or community that is recognized by the Federal Government as eligible for services from the Bureau of Indian Affairs (BIA) in accordance with 25 U.S.C. 1452(c) and any ``Native" as defined in the Alaska Native Claims Settlement Act (43 U.S.C. 1601).

"Indian organization" means the governing body of any Indian tribe or entity established or recognized by the governing body of an Indian tribe for the purposes of 25 U.S.C., chapter 17.

"Indian-owned economic enterprise" means any Indian-owned (as determined by the Secretary of the Interior) commercial, industrial, or business activity established or organized for the purpose of profit, provided that Indian ownership constitutea not less than 51 percent of the enterprise.

"Indian tribe" means any Indian tribe, band, group, pueblo or community, including native villages and native groups (including corporations organized by Kenai, Juneau, Sitka, and Kodiak) as defined in the Alaska Native Claims Settlement Act, that is recognized by the Federal Government as eligible for services from BIA in accordance with 25 U.S.C. 1542(c).

"Interested party" means a prime contractor or an actual or prospective offeror whose direct economic interest would be affected by the award of a subcontract or by the failure to award a subcontract.

(b) The Contractor shall use its best efforts to give Indian organizations and Indian-owned economic enterprises (25 U.S.C. 1544) the maximum practicable opportunity to participate in the subcontracts it awards to the fullest extent consistent with efficient performance of its contract.

(1) The Contracting Officer and the Contractor, acting in good faith, may rely on the representation of an Indian organization or Indian-owned economic enterprise as to its eligibility, unless an interested party challenges its status or the Contracting Officer has independent reason to question that status. In the event of a challenge to the representation of a subcontractor, the Contracting Officer will refer the matter to the U.S. Department of the Interior, Bureau of Indian Affairs (BIA), Attn: Chief, Division of Contracting and Grants Administration, 1849 C Street, NW., MS 2626-MIB, Washington, DC 20240-4000.

The BIA will determine the eligibility and notify the Contracting Officer. No incentive payment will be made within 50 working days of subcontract award or while a challenge is pending. If a subcontractor is determined to be an ineligible participant, no incentive payment will be made under the Indian Incentive Program.

(2) The Contractor may request an adjustment under the Indian Incentive Program to the following:

(i) The estimated cost of a cost-type contract.

(ii) The target cost of a cost-plus-incentive-fee prime contract.

(iii) The target cost and ceiling price of a fixed-price incentive prime contract.

(iv) The price of a firm-fixed-price prime contract.

(3) The amount of the adjustment to the prime contract is 5 percent of the estimated cost, target cost, or firm-fixed-price included in the subcontract initially awarded to the Indian organization or Indian-owned economic enterprise.

(4) The Contractor has the burden of proving the amount claimed and must assert its request for an adjustment prior to completion of contract performance.

(c) The Contracting Officer, subject to the terms and conditions of the contract and the availability of funds, will authorize an incentive payment of 5 percent of the amount paid to the subcontractor. The Contracting Officer will seek funding in accordance with agency procedures.

(End of clause)

52.227-1 AUTHORIZATION AND CONSENT (JUL 1995)

(a) The Government authorizes and consents to all use and manufacture, in performing this contract or any subcontract at any tier, of any invention described in and covered by a United States patent (1) embodied in the structure or composition of any article the delivery of which is accepted by the Government under this contract or (2) used in machinery, tools, or methods whose use necessarily results from compliance by the Contractor or a subcontractor with (i) specifications or written provisions forming a part of this contract or (ii) specific written instructions given by the Contracting Officer directing the manner of performance. The entire liability to the Government for infringement of a patent of the United States shall be determined solely by the provisions of the indemnity clause, if any, included in this contract or any subcontract hereunder (including any lower-tier

subcontract), and the Government assumes liability for all other infringement to the extent of the authorization and consent hereinabove granted.

(b) The Contractor agrees to include, and require inclusion of, this clause, suitably modified to identify the parties, in all subcontracts at any tier for supplies or services (including construction, architect-engineer services, and materials, supplies, models, samples, and design or testing services expected to exceed the simplified acquisition threshold (however, omission of this clause from any subcontract, including those at or below the simplified acquisition threshold, does not affect this authorization and consent.)

(End of clause)

52.227-2 NOTICE AND ASSISTANCE REGARDING PATENT AND COPYRIGHT INFRINGEMENT (AUG 1996)

(a) The Contractor shall report to the Contracting Officer, promptly and in reasonable written detail, each notice or claim of patent or copyright infringement based on the performance of this contract of which the Contractor has knowledge.

(b) In the event of any claim or suit against the Government on account of any alleged patent or copyright infringement arising out of the performance of this contract or out of the use of any supplies furnished or work or services performed under this contract, the Contractor shall furnish to the Government, when requested by the Contracting Officer, all evidence and information in possession of the Contractor pertaining to such suit or claim. Such evidence and information shall be furnished at the expense of the Government except where the Contractor has agreed to indemnify the Government.

(4) The Contractor agrees to include, and require inclusion of, this clause in all subcontracts at any tier for supplies or services (including construction and architect-engineer subcontracts and those for material, supplies, models, samples, or design or testing services) expected to exceed the simplified acquisition threshold at (FAR) 2.101.to exceed the dollar amount set forth in 13.000 of the Federal Acquisition Regulation (FAR).

(End of clause)

52.227-4 PATENT INDEMNITY--CONSTRUCTION CONTRACTS (APR 1984)

Except as otherwise provided, the Contractor agrees to indemnify the Government and its officers, agents, and employees against liability, including costs and expenses, for infringement upon any United States patent (except a patent issued upon an application that is now or may hereafter be withheld from issue pursuant to a Secrecy Order under 35 U.S.C. 181) arising out of performing this contract or out of the use or disposal by or for the account of the Government of supplies furnished or work performed under this contract.

(End of clause)

52.228-1 BID GUARANTEE (SEP 1996)

(a) Failure to furnish a bid guarantee in the proper form and amount, by the time set for opening of bids, may be cause for rejection of the bid.

(b) The bidder shall furnish a bid guarantee in the form of a firm commitment, e.g., bid bond supported by good and

sufficient surety or sureties acceptable to the Government, postal money order, certified check, cashier's check, irrevocable letter of credit, or, under Treasury Department regulations, certain bonds or notes of the United States. The Contracting Officer will return bid guarantees, other than bid bonds, (1) to unsuccessful bidders as soon as practicable after the opening of bids, and (2) to the successful bidder upon execution of contractual documents and bonds (including any necessary coinsurance or reinsurance agreements), as required by the bid as accepted.-

(c) The amount of the bid guarantee shall 20% percent of the bid price or $3,000,000.00, whichever is less.-

(d) If the successful bidder, upon acceptance of its bid by the Government within the period specified for acceptance, fails to execute all contractual documents or furnish executed bond(s) within 10 days after receipt of the forms by the bidder, the Contracting Officer may terminate the contract for default.-

(e) In the event the contract is terminated for default, the bidder is liable for any cost of acquiring the work that exceeds the amount of its bid, and the bid guarantee is available to offset the difference.

(End of clause)

52.228-2 ADDITIONAL BOND SECURITY (OCT 1997)

The Contractor shall promptly furnish additional security required to protect the Government and persons supplying labor or materials under this contract if--

(a) Any surety upon any bond, or issuing financial institution for other security, furnished with this contract becomes unacceptable to the Government.

(b) Any surety fails to furnish reports on its financial condition as required by the Government;

(c) The contract price is increased so that the penal sum of any bond becomes inadequate in the opinion of the Contracting Officer; or

(d) An irrevocable letter of credit (ILC) used as security will expire before the end of the period of required security. If the Contractor does not furnish an acceptable extension or replacement ILC, or other acceptable substitute, at least 30 days before an ILC's scheduled expiration, the Contracting officer has the right to immediately draw on the ILC.

(End of clause)

52.228-5 INSURANCE--WORK ON A GOVERNMENT INSTALLATION (JAN 1997)

(a) The Contractor shall, at its own expense, provide and maintain during the entire performance of this contract, at least the kinds and minimum amounts of insurance required in the Schedule or elsewhere in the contract.

(b) Before commencing work under this contract, the Contractor shall notify the Contracting Officer in writing that the required insurance has been obtained. The policies evidencing required insurance shall contain an endorsement to the effect that any cancellation or any material change adversely affecting the Government's interest shall not be effective (1) for such period as the laws of the State in which this contract is to be performed prescribe, or (2) until 30 days after the insurer or the Contractor gives written notice to the Contracting Officer, whichever period is longer.

(c) The Contractor shall insert the substance of this clause, including this paragraph (c), in subcontracts under this

contract that require work on a Government installation and shall require subcontractors to provide and maintain the insurance required in the Schedule or elsewhere in the contract. The Contractor shall maintain a copy of all subcontractors' proofs of required insurance, and shall make copies available to the Contracting Officer upon request.

(End of clause)

52.228-11 PLEDGES OF ASSETS (FEB 1992)

(a) Offerors shall obtain from each person acting as an individual surety on a bid guarantee, a performance bond, or a payment bond--

(1) Pledge of assets; and

(2) Standard Form 28, Affidavit of Individual Surety.

(b) Pledges of assets from each person acting as an individual surety shall be in the form of--

(1) Evidence of an escrow account containing cash, certificates of deposit, commercial or Government securities, or other assets described in FAR 28.203-2 (except see 28.203-2(b)(2) with respect to Government securities held in book entry form) and/or;

(2) A recorded lien on real estate. The offeror will be required to provide--

(i) Evidence of title in the form of a certificate of title prepared by a title insurance company approved by the United States Department of Justice. This title evidence must show fee simple title vested in the surety along with any concurrent owners; whether any real estate taxes are due and payable; and any recorded encumbrances against the property, including the lien filed in favor of the Government as required by FAR 28.203-3(d);

(ii) Evidence of the amount due under any encumbrance shown in the evidence of title;

(iii) A copy of the current real estate tax assessment of the property or a current appraisal dated no earlier than 6 months prior to the date of the bond, prepared by a professional appraiser who certifies that the appraisal has been conducted in accordance with the generally accepted appraisal standards as reflected in the Uniform Standards of Professional Appraisal Practice, as promulgated by the Appraisal Foundation.

(End of clause)

52.228-12 PROSPECTIVE SUBCONTRACTOR REQUESTS FOR BONDS. (OCT 1995)

In accordance with Section 806(a)(3) of Pub. L. 102-190, as amended by Sections 2091 and 8105 of Pub. L. 103-355, upon the request of a prospective subcontractor or supplier offering to furnish labor or material for the performance of this contract for which a payment bond has been furnished to the Government pursuant to the Miller Act, the Contractor shall promptly provide a copy of such payment bond to the requester.

(End of clause)

52.228-14 IRREVOCABLE LETTER OF CREDIT (DEC 1999)

(a) “Irrevocable letter of credit” (ILC), as used in this clause, means a written commitment by a federally insured

financial institution to pay all or part of a stated amount of money, until the expiration date of the letter, upon presentation by the Government (the beneficiary) of a written demand therefor. Neither the financial institution nor the offeror/Contractor can revoke or condition the letter of credit.

(b) If the offeror intends to use an ILC in lieu of a bid bond, or to secure other types of bonds such as performance and payment bonds, the letter of credit and letter of confirmation formats in paragraphs (e) and (f) of this clause shall be used.

(c) The letter of credit shall be irrevocable, shall require presentation of no document other than a written demand and the ILC (including confirming letter, if any), shall be issued/confirmed by an acceptable federally insured financial institution as provided in paragraph (d) of this clause, and--

(1) If used as a bid guarantee, the ILC shall expire no earlier than 60 days after the close of the bid acceptance period;

(2) If used as an alternative to corporate or individual sureties as security for a performance or payment bond, the offeror/Contractor may submit an ILC with an initial expiration date estimated to cover the entire period for which financial security is required or may submit an ILC with an initial expiration date that is a minimum period of one year from the date of issuance. The ILC shall provide that, unless the issuer provides the beneficiary written notice of non-renewal at least 60 days in advance of the current expiration date, the ILC is automatically extended without amendment for one year from the expiration date, or any future expiration date, until the period of required coverage is completed and the Contracting Officer provides the financial institution with a written statement waiving the right to payment. The period of required coverage shall be:

(i) For contracts subject to the Miller Act, the later of--

(A) One year following the expected date of final payment;

(B) For performance bonds only, until completion of any warranty period; or

(C) For payment bonds only, until resolution of all claims filed against the payment bond during the one-year period following final payment.

(ii) For contracts not subject to the Miller Act, the later of--

(A) 90 days following final payment; or

(B) For performance bonds only, until completion of any warranty period.

(d) Only federally insured financial institutions rated investment grade or higher shall issue or confirm the ILC. The offeror/Contractor shall provide the Contracting Officer a credit rating that indicates the financial institution has the required rating(s) as of the date of issuance of the ILC. Unless the financial institution issuing the ILC had letter of credit business of less than $25 million in the past year, ILCs over $5 million must be confirmed by another acceptable financial institution that had letter of credit business of less than $25 million in the past year.

(e) The following format shall be used by the issuing financial institution to create an ILC:

_____

[Issuing Financial Institution's Letterhead or Name and Address]

Issue Date _____

IRREVOCABLE LETTER OF CREDIT NO. _____

Account party's name _____

Account party's address _____

For Solicitation No. _____(for reference only)

TO: [U.S. Government agency]

[U.S. Government agency's address]

1. We hereby establish this irrevocable and transferable Letter of Credit in your favor for one or more drawings up to United States $_____. This Letter of Credit is payable at [issuing financial institution's and, if any, confirming financial institution's] office at [issuing financial institution's address and, if any, confirming financial institution's address] and expires with our close of business on _____, or any automatically extended expiration date.

2. We hereby undertake to honor your or the transferee's sight draft(s) drawn on the issuing or, if any, the confirming financial institution, for all or any part of this credit if presented with this Letter of Credit and confirmation, if any, at the office specified in paragraph 1 of this Letter of Credit on or before the expiration date or any automatically extended expiration date.

3. [This paragraph is omitted if used as a bid guarantee, and subsequent paragraphs are renumbered.] It is a condition of this Letter of Credit that it is deemed to be automatically extended without amendment for one year from the expiration date hereof, or any future expiration date, unless at least 60 days prior to any expiration date, we notify you or the transferee by registered mail, or other receipted means of delivery, that we elect not to consider this Letter of Credit renewed for any such additional period. At the time we notify you, we also agree to notify the account party (and confirming financial institution, if any) by the same means of delivery.

4. This Letter of Credit is transferable. Transfers and assignments of proceeds are to be effected without charge to either the beneficiary or the transferee/assignee of proceeds. Such transfer or assignment shall be only at the written direction of the Government (the beneficiary) in a form satisfactory to the issuing financial institution and the confirming financial institution, if any.

5. This Letter of Credit is subject to the Uniform Customs and Practice (UCP) for Documentary Credits, 1993 Revision, International Chamber of Commerce Publication No. 500, and to the extent not inconsistent therewith, to the laws of _____ [state of confirming financial institution, if any, otherwise state of issuing financial institution].

6. If this credit expires during an interruption of business of this financial institution as described in Article 17 of the UCP, the financial institution specifically agrees to effect payment if this credit is drawn against within 30 days after the resumption of our business.

Sincerely,

_____

[Issuing financial institution]

(f) The following format shall be used by the financial institution to confirm an ILC:

_____
[Confirming Financial Institution's Letterhead or Name and Address]

(Date) _____

Our Letter of Credit Advice Number _____

Beneficiary: _____ [U.S. Government agency]

Issuing Financial Institution: _____

Issuing Financial Institution's LC No.: _____

Gentlemen:

1. We hereby confirm the above indicated Letter of Credit, the original of which is attached, issued by _____ [name of issuing financial institution] for drawings of up to United States dollars _____/U.S. $_____ and expiring with our close of business on _____ [the expiration date], or any automatically extended expiration date.

2. Draft(s) drawn under the Letter of Credit and this Confirmation are payable at our office located at _____.

3. We hereby undertake to honor sight draft(s) drawn under and presented with the Letter of Credit and this Confirmation at our offices as specified herein.

4. [This paragraph is omitted if used as a bid guarantee, and subsequent paragraphs are renumbered.] It is a condition of this confirmation that it be deemed automatically extended without amendment for one year from the expiration date hereof, or any automatically extended expiration date, unless:

(a) At least 60 days prior to any such expiration date, we shall notify the Contracting Officer, or the transferee and the issuing financial institution, by registered mail or other receipted means of delivery, that we elect not to consider this confirmation extended for any such additional period; or

(b) The issuing financial institution shall have exercised its right to notify you or the transferee, the account party, and ourselves, of its election not to extend the expiration date of the Letter of Credit.

5. This confirmation is subject to the Uniform Customs and Practice (UCP) for Documentary Credits, 1993 Revision, International Chamber of Commerce Publication No. 500, and to the extent not inconsistent therewith, to the laws of _____ [state of confirming financial institution].

6. If this confirmation expires during an interruption of business of this financial institution as described in Article 17 of the UCP, we specifically agree to effect payment if this credit is drawn against within 30 days after the resumption of our business.

Sincerely,

_____

[Confirming financial institution]

(g) The following format shall be used by the Contracting Officer for a sight draft to draw on the Letter of Credit:

SIGHT DRAFT

_____

[City, State]

(Date) _____

[Name and address of financial institution]

Pay to the order of _____ [Beneficiary Agency] _____ the sum of United States $_____.
This draft is drawn under Irrevocable Letter of Credit No. _____.

_____

[Beneficiary Agency]

By: _____

(End of clause)

52.228-15 PERFORMANCE AND PAYMENT BONDS--CONSTRUCTION (JUL 2000)-

(a) Definitions. As used in this clause--

Original contract price means the award price of the contract; or, for requirements contracts, the price payable for the estimated total quantity; or, for indefinite-quantity contracts, the price payable for the specified minimum quantity. Original contract price does not include the price of any options, except those options exercised at the time of contract award.

(b) Amount of required bonds. Unless the resulting contract price is $100,000 or less, the successful offeror shall furnish performance and payment bonds to the Contracting Officer as follows:

(1) Performance bonds (Standard Form 25). The penal amount of performance bonds at the time of contract award shall be 100 percent of the original contract price.

(2) Payment Bonds (Standard Form 25-A). The penal amount of payment bonds at the time of contract award shall be 100 percent of the original contract price.

(3) Additional bond protection. (i) The Government may require additional performance and payment bond protection if the contract price is increased. The increase in protection generally will equal 100 percent of the increase in contract price.

(ii) The Government may secure the additional protection by directing the Contractor to increase the penal amount of the existing bond or to obtain an additional bond.

(c) Furnishing executed bonds. The Contractor shall furnish all executed bonds, including any necessary reinsurance agreements, to the Contracting Officer, within the time period specified in the Bid Guarantee provision of the solicitation, or otherwise specified by the Contracting Officer, but in any event, before starting work.

(d) Surety or other security for bonds. The bonds shall be in the form of firm commitment, supported by corporate sureties whose names appear on the list contained in Treasury Department Circular 570, individual sureties, or by other acceptable security such as postal money order, certified check, cashier's check, irrevocable letter of credit, or, in accordance with Treasury Department regulations, certain bonds or notes of the United States. Treasury Circular 570 is published in the Federal Register or may be obtained from the U.S. Department of Treasury, Financial Management Service, Surety Bond Branch, 401 14th Street, NW, 2nd Floor, West Wing, Washington, DC 20227.

(e) Notice of subcontractor waiver of protection (40 U.S.C. 270b(c). Any waiver of the right to sue on the payment bond is void unless it is in writing, signed by the person whose right is waived, and executed after such person has first furnished labor or material for use in the performance of the contract.

(End of clause)

52.229-3 FEDERAL, STATE, AND LOCAL TAXES (APR 2003)

(a) As used in this clause--

"Contract date" means the date set for bid opening or, if this is a negotiated contract or a modification, the effective date of this contract or modification.

"All applicable Federal, State, and local taxes and duties" means all taxes and duties, in effect on the contract date, that the taxing authority is imposing and collecting on the transactions or property covered by this contract.

"After-imposed Federal tax" means any new or increased Federal excise tax or duty, or tax that was exempted or excluded on the contract date but whose exemption was later revoked or reduced during the contract period, on the transactions or property covered by this contract that the Contractor is required to pay or bear as the result of legislative, judicial, or administrative action taking effect after the contract date. It does not include social security tax or other employment taxes.

"After-relieved Federal tax" means any amount of Federal excise tax or duty, except social security or other employment taxes, that would otherwise have been payable on the transactions or property covered by this contract, but which the Contractor is not required to pay or bear, or for which the Contractor obtains a refund or drawback, as the result of legislative, judicial, or administrative action taking effect after the contract date.

Local taxes includes taxes imposed by a possession or territory of the United States, Puerto Rico, or the Northern Mariana Islands, if the contract is performed wholly or partly in any of those areas.

(b) The contract price includes all applicable Federal, State, and local taxes and duties.

(c) The contract price shall be increased by the amount of any after-imposed Federal tax, provided the Contractor warrants in writing that no amount for such newly imposed Federal excise tax or duty or rate increase was included in the contract price, as a contingency reserve or otherwise.

(d) The contract price shall be decreased by the amount of any after-relieved Federal tax.

(e) The contract price shall be decreased by the amount of any Federal excise tax or duty, except social security or other employment taxes, that the Contractor is required to pay or bear, or does not obtain a refund of, through the Contractor's fault, negligence, or failure to follow instructions of the Contracting Officer.

(f) No adjustment shall be made in the contract price under this clause unless the amount of the adjustment exceeds $250.

(g) The Contractor shall promptly notify the Contracting Officer of all matters relating to any Federal excise tax or duty that reasonably may be expected to result in either an increase or decrease in the contract price and shall take appropriate action as the Contracting Officer directs.

(h) The Government shall, without liability, furnish evidence appropriate to establish exemption from any Federal, State, or local tax when the Contractor requests such evidence and a reasonable basis exists to sustain the exemption.

(End of clause)

52.231-5000 EQUIPMENT OWNERSHIP AND OPERATING EXPENSE SCHEDULE
MAR 1995)--EFARS

(a) This clause does not apply to terminations. See 52.249-5000, Basis for Settlement of Proposals and FAR Part 49.

(b) Allowable cost for construction and marine plant and equipment in sound workable condition owned or controlled and furnished by a contractor or subcontractor at any tier shall be based on actual cost data for each piece of equipment or groups of similar serial and series for which the Government can determine both ownership and operating costs from the contractor's accounting records. When both ownership and operating costs cannot be determined for any piece of equipment or groups of similar serial or series equipment from the contractor's accounting records, costs for that equipment shall be based upon the applicable provisions of EP 1110-1-8, Construction Equipment Ownership and Operating Expense Schedule, Region III. Working conditions shall be considered to be average for determining equipment rates using the schedule unless specified otherwise by the contracting officer. For equipment not included in the schedule, rates for comparable pieces of equipment may be used or a rate may be developed using the formula provided in the schedule. For forward pricing, the schedule in effect at the time of negotiations shall apply. For retroactive pricing, the schedule in effect at the time the work was performed shall apply.

(c) Equipment rental costs are allowable, subject to the provisions of FAR 31.105(d)(ii) and FAR 31.205-36. Rates for equipment rented from an organization under common control, lease-purchase arrangements, and sale-leaseback arrangements, will be determined using the schedule, except that actual rates will be used for equipment leased from an organization under common control that has an established practice of leasing the same or similar equipment to unaffiliated lessees.

(d) When actual equipment costs are proposed and the total amount of the pricing action exceeds the small purchase threshold, the contracting officer shall request the contractor to submit either certified cost or pricing data, or partial/limited data, as appropriate. The data shall be submitted on Standard Form 1411, Contract Pricing Proposal Cover Sheet.

(End of clause)

52.232-5 PAYMENTS UNDER FIXED-PRICE CONSTRUCTION CONTRACTS (SEP 2002)

(a) Payment of price. The Government shall pay the Contractor the contract price as provided in this contract.

(b) Progress payments. The Government shall make progress payments monthly as the work proceeds, or at more frequent intervals as determined by the Contracting Officer, on estimates of work accomplished which meets the standards of quality established under the contract, as approved by the Contracting Officer.

(1) The Contractor's request for progress payments shall include the following substantiation:

(i) An itemization of the amounts requested, related to the various elements of work required by the contract covered by the payment requested.

(ii) A listing of the amount included for work performed by each subcontractor under the contract.

(iii) A listing of the total amount of each subcontract under the contract.

(iv) A listing of the amounts previously paid to each such subcontractor under the contract.

(v) Additional supporting data in a form and detail required by the Contracting Officer.

(2) In the preparation of estimates, the Contracting Officer may authorize material delivered on the site and preparatory work done to be taken into consideration. Material delivered to the Contractor at locations other than the site also may be taken into consideration if--

(i) Consideration is specifically authorized by this contract; and

(ii) The Contractor furnishes satisfactory evidence that it has acquired title to such material and that the material will be used to perform this contract.

(c) Contractor certification. Along with each request for progress payments, the Contractor shall furnish the following certification, or payment shall not be made: (However, if the Contractor elects to delete paragraph (c)(4) from the certification, the certification is still acceptable.)

I hereby certify, to the best of my knowledge and belief, that--

(1) The amounts requested are only for performance in accordance with the specifications, terms, and conditions of the contract;

(2) All payments due to subcontractors and suppliers from previous payments received under the contract have been made, and timely payments will be made from the proceeds of the payment covered by this certification, in accordance with subcontract agreements and the requirements of chapter 39 of Title 31, United States Code;

(3) This request for progress payments does not include any amounts which the prime contractor intends to withhold or retain from a subcontractor or supplier in accordance with the terms and conditions of the subcontract; and

(4) This certification is not to be construed as final acceptance of a subcontractor's performance.

_____

(Name)

_____

(Title)

_____

(Date)

(d) Refund of unearned amounts. If the Contractor, after making a certified request for progress payments, discovers that a portion or all of such request constitutes a payment for performance by the Contractor that fails to conform to the specifications, terms, and conditions of this contract (hereinafter referred to as the "unearned amount"), the Contractor shall--

(1) Notify the Contracting Officer of such performance deficiency; and

(2) Be obligated to pay the Government an amount (computed by the Contracting Officer in the manner provided in paragraph (j) of this clause) equal to interest on the unearned amount from the 8th day after the date of receipt of the

unearned amount until--

(i) The date the Contractor notifies the Contracting Officer that the performance deficiency has been corrected; or

(ii) The date the Contractor reduces the amount of any subsequent certified request for progress payments by an amount equal to the unearned amount.

(e) Retainage. If the Contracting Officer finds that satisfactory progress was achieved during any period for which a progress payment is to be made, the Contracting Officer shall authorize payment to be made in full. However, if satisfactory progress has not been made, the Contracting Officer may retain a maximum of 10 percent of the amount of the payment until satisfactory progress is achieved. When the work is substantially complete, the Contracting Officer may retain from previously withheld funds and future progress payments that amount the Contracting Officer considers adequate for protection of the Government and shall release to the Contractor all the remaining withheld funds. Also, on completion and acceptance of each separate building, public work, or other division of the contract, for which the price is stated separately in the contract, payment shall be made for the completed work without retention of a percentage.

(f) Title, liability, and reservation of rights. All material and work covered by progress payments made shall, at the time of payment, become the sole property of the Government, but this shall not be construed as--

(1) Relieving the Contractor from the sole responsibility for all material and work upon which payments have been made or the restoration of any damaged work; or

(2) Waiving the right of the Government to require the fulfillment of all of the terms of the contract.

(g) Reimbursement for bond premiums. In making these progress payments, the Government shall, upon request, reimburse the Contractor for the amount of premiums paid for performance and payment bonds (including coinsurance and reinsurance agreements, when applicable) after the Contractor has furnished evidence of full payment to the surety. The retainage provisions in paragraph (e) of this clause shall not apply to that portion of progress payments attributable to bond premiums.

(h) Final payment. The Government shall pay the amount due the Contractor under this contract after--

(1) Completion and acceptance of all work;

(2) Presentation of a properly executed voucher; and

(3) Presentation of release of all claims against
the Government arising by virtue of this contract, other than claims, in stated amounts, that the Contractor has specifically excepted from the operation of the release. A release may also be required of the assignee if the Contractor's claim to amounts payable under this contract has been assigned under the Assignment of Claims Act of 1940 (31 U.S.C. 3727 and 41 U.S.C. 15).

(i) Limitation because of undefinitized work. Notwithstanding any provision of this contract, progress payments shall not exceed 80 percent on work accomplished on undefinitized contract actions. A "contract action" is any action resulting in a contract, as defined in FAR Subpart 2.1, including contract modifications for additional supplies or services, but not including contract modifications that are within the scope and under the terms of the contract, such as contract modifications issued pursuant to the Changes clause, or funding and other administrative changes.

(j) Interest computation on unearned amounts. In accordance with 31 U.S.C. 3903(c)(1), the amount payable under subparagraph (d)(2) of this clause shall be--

(1) Computed at the rate of average bond equivalent rates of 91-day Treasury bills auctioned at the most recent

auction of such bills prior to the date the Contractor receives the unearned amount; and

(2) Deducted from the next available payment to the Contractor.

(End of clause)

52.232-17 INTEREST (JUNE 1996)

(a) Except as otherwise provided in this contract under a Price Reduction for Defective Cost or Pricing Data clause or a Cost Accounting Standards clause, all amounts that become payable by the Contractor to the Government under this contract (net of any applicable tax credit under the Internal Revenue Code (26 U.S.C. 1481)) shall bear simple interest from the date due until paid unless paid within 30 days of becoming due. The interest rate shall be the interest rate established by the Secretary of the Treasury as provided in Section 12 of the Contract Disputes Act of 1978 (Public Law 95-563), which is applicable to the period in which the amount becomes due, as provided in paragraph (b) of this clause, and then at the rate applicable for each six-month period as fixed by the Secretary until the amount is paid. reproduce, prepare derivative works, distribute copies to the public, and (b) Amounts shall be due at the earliest of the following dates:

(1) The date fixed under this contract.

(2) The date of the first written demand for payment consistent with this contract, including any demand resulting from a default termination.

(3) The date the Government transmits to the Contractor a proposed supplemental agreement to confirm completed negotiations establishing the amount of debt.

(4) If this contract provides for revision of prices, the date of written notice to the Contractor stating the amount of refund payable in connection with a pricing proposal or a negotiated pricing agreement not confirmed by contract modification.

(c) The interest charge made under this clause may be reduced under the procedures prescribed in 32.614-2 of the Federal Acquisition Regulation in effect on the date of this contract.

(End of clause)

52.232-23 ASSIGNMENT OF CLAIMS (JAN 1986)

(a) The Contractor, under the Assignment of Claims Act, as amended, 31 U.S.C. 3727, 41 U.S.C. 15 (hereafter referred to as "the Act"), may assign its rights to be paid amounts due or to become due as a result of the performance of this contract to a bank, trust company, or other financing institution, including any Federal lending agency. The assignee under such an assignment may thereafter further assign or reassign its right under the original assignment to any type of financing institution described in the preceding sentence.

(b) Any assignment or reassignment authorized under the Act and this clause shall cover all unpaid amounts payable under this contract, and shall not be made to more than one party, except that an assignment or reassignment may be made to one party as agent or trustee for two or more parties participating in the financing of this contract.

(c) The Contractor shall not furnish or disclose to any assignee under this contract any classified document (including this contract) or information related to work under this contract until the Contracting Officer authorizes such action in writing.

(End of clause)

52.232-27 PROMPT PAYMENT FOR CONSTRUCTION CONTRACTS (OCT 2003)

Notwithstanding any other payment terms in this contract, the Government will make invoice payments under the terms and conditions specified in this clause. The Government considers payment as being made on the day a check is dated or the date of an electronic funds transfer. Definitions of pertinent terms are set forth in sections 2.101, 32.001, and 32.902 of the Federal Acquisition Regulation. All days referred to in this clause are calendar days, unless otherwise specified. (However, see paragraph (a)(3) concerning payments due on Saturdays, Sundays, and legal holidays.)

(a) Invoice payments--(1) Types of invoice payments. For purposes of this clause, there are several types of invoice payments that may occur under this contract, as follows:

(i) Progress payments, if provided for elsewhere in this contract, based on Contracting Officer approval of the estimated amount and value of work or services performed, including payments for reaching milestones in any project.

(A) The due date for making such payments is 14 days after the designated billing office receives a proper payment request. If the designated billing office fails to annotate the payment request with the actual date of receipt at the time of receipt, the payment due date is the 14th day after the date of the Contractor's payment request, provided the designated billing office receives a proper payment request and there is no disagreement over quantity, quality, or Contractor compliance with contract requirements.

(B) The due date for payment of any amounts retained by the Contracting Officer in accordance with the clause at 52.232-5, Payments Under Fixed-Price Construction Contracts, is as specified in the contract or, if not specified, 30 days after approval by the Contracting Officer for release to the Contractor.

(ii) Final payments based on completion and acceptance of all work and presentation of release of all claims against the Government arising by virtue of the contract, and payments for partial deliveries that have been accepted by the Government (e.g., each separate building, public work, or other division of the contract for which the price is stated separately in the contract).

(A) The due date for making such payments is the later of the following two events:

(1) The 30th day after the designated billing office receives a proper invoice from the Contractor.

(2) The 30th day after Government acceptance of the work or services completed by the Contractor. For a final invoice when the payment amount is subject to contract settlement actions (e.g., release of claims), acceptance is deemed to occur on the effective date of the contract settlement.

(B) If the designated billing office fails to annotate the invoice with the date of actual receipt at the time of receipt, the invoice payment due date is the 30th day after the date of the Contractor's invoice, provided the designated billing office receives a proper invoice and there is no disagreement over quantity, quality, or Contractor compliance with contract requirements.

(2) Contractor's invoice. The Contractor shall prepare and submit invoices to the designated billing office specified in the contract. A proper invoice must include the items listed in paragraphs (a)(2)(i) through (a)(2)(xi) of this clause. If the invoice does not comply with these requirements, the designated billing office must return it within 7 days after receipt, with the reasons why it is not a proper invoice. When computing any interest penalty owed the

Contractor, the Government will take into account if the Government notifies the Contractor of an improper invoice in an untimely manner.

(i) Name and address of the Contractor.

(ii) Invoice date and invoice number. (The Contractor should date invoices as close as possible to the date of mailing or transmission.)

(iii) Contract number or other authorization for work or services performed (including order number and contract line item number).

(iv) Description of work or services performed.

(v) Delivery and payment terms (e.g., discount for prompt payment terms).

(vi) Name and address of Contractor official to whom payment is to be sent (must be the same as that in the contract or in a proper notice of assignment).

(vii) Name (where practicable), title, phone number, and mailing address of person to notify in the event of a defective invoice.

(viii) For payments described in paragraph (a)(1)(i) of this clause, substantiation of the amounts requested and certification in accordance with the requirements of the clause at 52.232-5, Payments Under Fixed-Price Construction Contracts.

(ix) Taxpayer Identification Number (TIN). The Contractor shall include its TIN on the invoice only if required elsewhere in this contract.

(x) Electronic funds transfer (EFT) banking information.

(A) The Contractor shall include EFT banking information on the invoice only if required elsewhere in this contract.

(B) If EFT banking information is not required to be on the invoice, in order for the invoice to be a proper invoice, the Contractor shall have submitted correct EFT banking information in accordance with the applicable solicitation provision (e.g., 52.232-38, Submission of Electronic Funds Transfer Information with Offer), contract clause (e.g., 52.232-33, Payment by Electronic Funds Transfer--Central Contractor Registration, or 52.232-34, Payment by Electronic Funds Transfer--Other Than Central Contractor Registration), or applicable agency procedures.

(C) EFT banking information is not required if the Government waived the requirement to pay by EFT.

(xi) Any other information or documentation required by the contract.

(3) Interest penalty. The designated payment office will pay an interest penalty automatically, without request from the Contractor, if payment is not made by the due date and the conditions listed in paragraphs (a)(3)(i) through (a)(3)(iii) of this clause are met, if applicable. However, when the due date falls on a Saturday, Sunday, or legal holiday, the designated payment office may make payment on the following working day without incurring a late payment interest penalty.

(i) The designated billing office received a proper invoice.

(ii) The Government processed a receiving report or other Government documentation authorizing payment and there was no disagreement over quantity, quality, Contractor compliance with any contract term or condition, or requested progress payment amount.

(iii) In the case of a final invoice for any balance of funds due the Contractor for work or services performed, the amount was not subject to further contract settlement actions between the Government and the Contractor.

(4) Computing penalty amount. The Government will compute the interest penalty in accordance with the Office of Management and Budget prompt payment regulations at 5 CFR part 1315.

(i) For the sole purpose of computing an interest penalty that might be due the Contractor for payments described in paragraph (a)(1)(ii) of this clause, Government acceptance or approval is deemed to occur constructively on the 7th day after the Contractor has completed the work or services in accordance with the terms and conditions of the contract. If actual acceptance or approval occurs within the constructive acceptance or approval period, the Government will base the determination of an interest penalty on the actual date of acceptance or approval. Constructive acceptance or constructive approval requirements do not apply if there is a disagreement over quantity, quality, or Contractor compliance with a contract provision. These requirements also do not compel Government officials to accept work or services, approve Contractor estimates, perform contract administration functions, or make payment prior to fulfilling their responsibilities.

(ii) The prompt payment regulations at 5 CFR 1315.10(c) do not require the Government to pay interest penalties if payment delays are due to disagreement between the Government and the Contractor over the payment amount or other issues involving contract compliance, or on amounts temporarily withheld or retained in accordance with the terms of the contract. The Government and the Contractor shall resolve claims involving disputes, and any interest that may be payable in accordance with the clause at FAR 52.233-1, Disputes.

(5) Discounts for prompt payment. The designated payment office will pay an interest penalty automatically, without request from the Contractor, if the Government takes a discount for prompt payment improperly. The Government will calculate the interest penalty in accordance with the prompt payment regulations at 5 CFR part 1315.

(6) Additional interest penalty. (i) The designated payment office will pay a penalty amount, calculated in accordance with the prompt payment regulations at 5 CFR part 1315 in addition to the interest penalty amount only if--

(A) The Government owes an interest penalty of $1 or more;

(B) The designated payment office does not pay the interest penalty within 10 days after the date the invoice amount is paid; and

(C) The Contractor makes a written demand to the designated payment office for additional penalty payment, in accordance with paragraph (a)(6)(ii) of this clause, postmarked not later than 40 days after the date the invoice amount is paid.

(ii)(A) The Contractor shall support written demands for additional penalty payments with the following data. The Government will not request any additional data. The Contractor shall--

(1) Specifically assert that late payment interest is due under a specific invoice, and request payment of all overdue late payment interest penalty and such additional penalty as may be required;

(2) Attach a copy of the invoice on which the unpaid late payment interest was due; and

(3) State that payment of the principal has been received, including the date of receipt.

(B) If there is no postmark or the postmark is illegible--

(1) The designated payment office that receives the demand will annotate it with the date of receipt provided the demand is received on or before the 40th day after payment was made; or

(2) If the designated payment office fails to make the required annotation, the Government will determine the demand's validity based on the date the Contractor has placed on the demand, provided such date is no later than the 40th day after payment was made.

(b) Contract financing payments. If this contract provides for contract financing, the Government will make contract financing payments in accordance with the applicable contract financing clause.

(c) Subcontract clause requirements. The Contractor shall include in each subcontract for property or services (including a material supplier) for the purpose of performing this contract the following:

(1) Prompt payment for subcontractors. A payment clause that obligates the Contractor to pay the subcontractor for satisfactory performance under its subcontract not later than 7 days from receipt of payment out of such amounts as are paid to the Contractor under this contract.

(2) Interest for subcontractors. An interest penalty clause that obligates the Contractor to pay to the subcontractor an interest penalty for each payment not made in accordance with the payment clause--

(i) For the period beginning on the day after the required payment date and ending on the date on which payment of the amount due is made; and

(ii) Computed at the rate of interest established by the Secretary of the Treasury, and published in the Federal Register, for interest payments under section 12 of the Contract Disputes Act of 1978 (41 U.S.C. 611) in effect at the time the Contractor accrues the obligation to pay an interest penalty.

(3) Subcontractor clause flowdown. A clause requiring each subcontractor to use:

(i) Include a payment clause and an interest penalty clause conforming to the standards set forth in paragraphs (c)(1) and (c)(2) of this clause in each of its subcontracts; and

(ii) Require each of its subcontractors to include such clauses in their subcontracts with each lower-tier subcontractor or supplier.

(d) Subcontract clause interpretation. The clauses required by paragraph (c) of this clause shall not be construed to impair the right of the Contractor or a subcontractor at any tier to negotiate, and to include in their subcontract, provisions that--

(1) Retainage permitted. Permit the Contractor or a subcontractor to retain (without cause) a specified percentage of each progress payment otherwise due to a subcontractor for satisfactory performance under the subcontract without incurring any obligation to pay a late payment interest penalty, in accordance with terms and conditions agreed to by the parties to the subcontract, giving such recognition as the parties deem appropriate to the ability of a subcontractor to furnish a performance bond and a payment bond;

(2) Withholding permitted. Permit the Contractor or subcontractor to make a determination that part or all of the subcontractor's request for payment may be withheld in accordance with the subcontract agreement; and

(3) Withholding requirements. Permit such withholding without incurring any obligation to pay a late payment penalty if--

(i) A notice conforming to the standards of paragraph (g) of this clause previously has been furnished to the subcontractor; and

(ii) The Contractor furnishes to the Contracting Officer a copy of any notice issued by a Contractor pursuant to paragraph (d)(3)(i) of this clause.

(e) Subcontractor withholding procedures. If a Contractor, after making a request for payment to the Government but before making a payment to a subcontractor for the subcontractor's performance covered by the payment request, discovers that all or a portion of the payment otherwise due such subcontractor is subject to withholding from the subcontractor in accordance with the subcontract agreement, then the Contractor shall--

(1) Subcontractor notice. Furnish to the subcontractor a notice conforming to the standards of paragraph (g) of this clause as soon as practicable upon ascertaining the cause giving rise to a withholding, but prior to the due date for subcontractor payment;

(2) Contracting Officer notice. Furnish to the Contracting Officer, as soon as practicable, a copy of the notice furnished to the subcontractor pursuant to paragraph (e)(1) of this clause;

(3) Subcontractor progress payment reduction. Reduce the subcontractor's progress payment by an amount not to exceed the amount specified in the notice of withholding furnished under paragraph (e)(1) of this clause;

(4) Subsequent subcontractor payment. Pay the subcontractor as soon as practicable after the correction of the identified subcontract performance deficiency, and--

(i) Make such payment within--

(A) Seven days after correction of the identified subcontract performance deficiency (unless the funds therefor must be recovered from the Government because of a reduction under paragraph
(e)(5)(i)) of this clause; or

(B) Seven days after the Contractor recovers such funds from the Government; or

(ii) Incur an obligation to pay a late payment interest penalty computed at the rate of interest established by the Secretary of the Treasury, and published in the Federal Register, for interest payments under section 12 of the Contracts Disputes Act of 1978 (41 U.S.C. 611) in effect at the time the Contractor accrues the obligation to pay an interest penalty;

(5) Notice to Contracting Officer. Notify the Contracting Officer upon--

(i) Reduction of the amount of any subsequent certified application for payment; or

(ii) Payment to the subcontractor of any withheld amounts of a progress payment, specifying--

(A) The amounts withheld under paragraph (e)(1) of this clause; and

(B) The dates that such withholding began and ended; and

(6) Interest to Government. Be obligated to pay to the Government an amount equal to interest on the withheld payments (computed in the manner provided in 31 U.S.C. 3903(c)(1)), from the 8th day after receipt of the withheld amounts from the Government until--

(i) The day the identified subcontractor performance deficiency is corrected; or

(ii) The date that any subsequent payment is reduced under paragraph (e)(5)(i) of this clause.

(f) Third-party deficiency reports--(1) Withholding from subcontractor. If a Contractor, after making payment to a first-tier subcontractor, receives from a supplier or subcontractor of the first-tier subcontractor (hereafter referred to as a “second-tier subcontractor”) a written notice in accordance with section 2 of the Act of August 24, 1935 (40 U.S.C. 270b, Miller Act), asserting a deficiency in such first-tier subcontractor's performance under the contract for

which the Contractor may be ultimately liable, and the Contractor determines that all or a portion of future payments otherwise due such first-tier subcontractor is subject to withholding in accordance with the subcontract agreement, the Contractor may, without incurring an obligation to pay an interest penalty under paragraph (e)(6) of this clause--

(i) Furnish to the first-tier subcontractor a notice conforming to the standards of paragraph (g) of this clause as soon as practicable upon making such determination; and

(ii) Withhold from the first-tier subcontractor's next available progress payment or payments an amount not to exceed the amount specified in the notice of withholding furnished under paragraph (f)(1)(i) of this clause.

(2) Subsequent payment or interest charge. As soon as practicable, but not later than 7 days after receipt of satisfactory written notification that the identified subcontract performance deficiency has been corrected, the Contractor shall--

(i) Pay the amount withheld under paragraph (f)(1)(ii) of this clause to such first-tier subcontractor; or

(ii) Incur an obligation to pay a late payment interest penalty to such first-tier subcontractor computed at the rate of interest established by the Secretary of the Treasury, and published in the Federal Register, for interest payments under section 12 of the Contracts DisputesAct of 1978 (41 U.S.C. 611) in effect at the time the Contractor accrues the obligation to pay an interest penalty.

(g) Written notice of subcontractor withholding. The Contractor shall issue a written notice of any withholding to a subcontractor (with a copy furnished to the Contracting Officer), specifying--

(1) The amount to be withheld;

(2) The specific causes for the withholding under the terms of the subcontract; and

(3) The remedial actions to be taken by the subcontractor in order to receive payment of the amounts withheld.

(h) Subcontractor payment entitlement. The Contractor may not request payment from the Government of any amount withheld or retained in accordance with paragraph (d) of this clause until such time as the Contractor has determined and certified to the Contracting Officer that the subcontractor is entitled to the payment of such amount.

(i) Prime-subcontractor disputes. A dispute between the Contractor and subcontractor relating to the amount or entitlement of a subcontractor to a payment or a late payment interest penalty under a clause included in the subcontract pursuant to paragraph (c) of this clause does not constitute a dispute to which the Government is a party. The Government may not be interpleaded in any judicial or administrative proceeding involving such a dispute.

(j) Preservation of prime-subcontractor rights. Except as provided in paragraph (i) of this clause, this clause shall not limit or impair any contractual, administrative, or judicial remedies otherwise available to the Contractor or a subcontractor in the event of a dispute involving late payment or nonpayment by the Contractor or deficient subcontract performance or nonperformance by a subcontractor.

(k) Non-recourse for prime contractor interest penalty. The Contractor's obligation to pay an interest penalty to a subcontractor pursuant to the clauses included in a subcontract under paragraph (c) of this clause shall not be construed to be an obligation of the Government for such interest penalty. A cost-reimbursement claim may not include any amount for reimbursement of such interest penalty.

(l) Overpayments. If the Contractor becomes aware of a duplicate contract financing or invoice payment or that the Government has otherwise overpaid on a contract financing or invoice payment, the Contractor shall immediately notify the Contracting Officer and request instructions for disposition of the overpayment.

(End of clause)

52.232-33 PAYMENT BY ELECTRONIC FUNDS TRANSFER—CENTRAL CONTRACTOR REGISTRATION (OCT 2003)

(a) Method of payment. (1) All payments by the Government under this contract shall be made by electronic funds transfer (EFT), except as provided in paragraph (a)(2) of this clause. As used in this clause, the term “EFT” refers to the funds transfer and may also include the payment information transfer.

(2) In the event the Government is unable to release one or more payments by EFT, the Contractor agrees to either--

(i) Accept payment by check or some other mutually agreeable method of payment; or

(ii) Request the Government to extend the payment due date until such time as the Government can make payment by EFT (but see paragraph (d) of this clause).

(b) Contractor's EFT information. The Government shall make payment to the Contractor using the EFT information contained in the Central Contractor Registration (CCR) database. In the event that the EFT information changes, the Contractor shall be responsible for providing the updated information to the CCR database.

(c) Mechanisms for EFT payment. The Government may make payment by EFT through either the Automated Clearing House (ACH) network, subject to the rules of the National Automated Clearing House Association, or the Fedwire Transfer System. The rules governing Federal payments through the ACH are contained in 31 CFR part 210.

(d) Suspension of payment. If the Contractor's EFT information in the CCR database is incorrect, then the Government need not make payment to the Contractor under this contract until correct EFT information is entered into the CCR database; and any invoice or contract financing request shall be deemed not to be a proper invoice for the purpose of prompt payment under this contract. The prompt payment terms of the contract regarding notice of an improper invoice and delays in accrual of interest penalties apply.

(e) Liability for uncompleted or erroneous transfers. (1) If an uncompleted or erroneous transfer occurs because the Government used the Contractor's EFT information incorrectly, the Government remains responsible for--

(i) Making a correct payment;

(ii) Paying any prompt payment penalty due; and

(iii) Recovering any erroneously directed funds.

(2) If an uncompleted or erroneous transfer occurs because the Contractor's EFT information was incorrect, or was revised within 30 days of Government release of the EFT payment transaction instruction to the Federal Reserve System, and--

(i) If the funds are no longer under the control of the payment office, the Government is deemed to have made payment and the Contractor is responsible for recovery of any erroneously directed funds; or

(ii) If the funds remain under the control of the payment office, the Government shall not make payment, and the provisions of paragraph (d) of this clause shall apply.

(f) EFT and prompt payment. A payment shall be deemed to have been made in a timely manner in accordance with the prompt payment terms of this contract if, in the EFT payment transaction instruction released to the Federal Reserve System, the date specified for settlement of the payment is on or before the prompt payment due date, provided the specified payment date is a valid date under the rules of the Federal Reserve System.

(g) EFT and assignment of claims. If the Contractor assigns the proceeds of this contract as provided for in the assignment of claims terms of this contract, the Contractor shall require as a condition of any such assignment, that the assignee shall register separately in the CCR database and shall be paid by EFT in accordance with the terms of this clause. Notwithstanding any other requirement of this contract, payment to an ultimate recipient other than the Contractor, or a financial institution properly recognized under an assignment of claims pursuant to subpart 32.8, is not permitted. In all respects, the requirements of this clause shall apply to the assignee as if it were the Contractor. EFT information that shows the ultimate recipient of the transfer to be other than the Contractor, in the absence of a proper assignment of claims acceptable to the Government, is incorrect EFT information within the meaning of paragraph (d) of this clause.

(h) Liability for change of EFT information by financial agent. The Government is not liable for errors resulting from changes to EFT information made by the Contractor's financial agent.

(i) Payment information. The payment or disbursing office shall forward to the Contractor available payment information that is suitable for transmission as of the date of release of the EFT instruction to the Federal Reserve System. The Government may request the Contractor to designate a desired format and method(s) for delivery of payment information from a list of formats and methods the payment office is capable of executing. However, the Government does not guarantee that any particular format or method of delivery is available at any particular payment office and retains the latitude to use the format and delivery method most convenient to the Government. If the Government makes payment by check in accordance with paragraph (a) of this clause, the Government shall mail the payment information to the remittance address contained in the CCR database.

(End of Clause)

52.232-5001 CONTINUING CONTRACTS (MAR 1995)--EFARS

(a) This is a continuing contract, as authorized by Section 10 of the River and Harbor Act of September 22, 1922 (33 U.S. Code 621). The payment of some portion of the contract price is dependent upon reservations of funds from future appropriations, and from future contribution to the project having one or more non-federal project sponsors. The responsibilities of the Government are limited by this clause notwithstanding any contrary provision of the "Payments to Contractor" clause or any other clause of this contract.

(b) The sum of $50,000.00 has been reserved for this contract and is available for payments to the contractor during the current fiscal year. It is expected that Congress will make appropriations for future fiscal years from which additional funds together with funds provided by one or more non-federal project sponsors will be reserved for this contract.

(c) Failure to make payments in excess of the amount currently reserved, or that may be reserved from time to time, shall not entitle the contractor to a price adjustment under the terms of this contract except as specifically provided in paragraphs (f) and (i) below. No such failure shall constitute a breach of this contract, except that this provision shall not bar a breach-of-contract action if an amount finally determined to be due as a termination allowance remains unpaid for one year due solely to a failure to reserve sufficient additional funds therefore.

(d) The Government may at any time reserve additional funds for payments under the contract if there are funds available for such purpose. The contracting officer will promptly notify the contractor of any additional funds reserved for the contract by issuing an administrative modification

to the contract.

(e) If earnings will be such that funds reserved for the contract will be exhausted before the end of any fiscal year, the contractor shall give written notice to the contracting officer of the estimated date of exhaustion and the amount of additional funds which will be needed to meet payments due or to become due under the contract during that fiscal year. This notice shall be given not less than 45 nor more than 60 days prior to the estimated date of exhaustion.

(f) No payments will be made after exhaustion of funds except to the extent that additional funds are reserved for the contract. The contractor shall be entitled to simple interest on any payment that the contracting officer determines was actually earned under the terms of the contract and would have been made except for exhaustion of funds. Interest shall be computed from the time such payment would otherwise have been made until actually or constructively made, and shall be at the rate established by the Secretary of the Treasury pursuant to Public Law 92-41, 85 STAT 97, as in effect on the first day of the delay in such payment.

(g) Any suspension, delay, or interruption of work arising from exhaustion or anticipated exhaustion of funds shall not constitute a breach of this contract and shall not entitle the contractor to any price adjustment under the "Suspension of Work" clause or in any other manner under this contract.

(h) An equitable adjustment in performance time shall be made for any increase in the time required for performance of any part of the work arising from exhaustion of funds or the reasonable anticipation of exhaustion of funds.

(i) If, upon the expiration of sixty (60) days after the beginning of the fiscal year following an exhaustion of funds, the Government has failed to reserve sufficient additional funds to cover payments otherwise due, the contractor, by written notice delivered to the contracting officer at any time before such additional funds are reserved, may elect to treat his right to proceed with the work as having been terminated. Such a termination shall be considered a termination for the convenience of the Government.

(j) If at any time it becomes apparent that the funds reserved for any fiscal year are in excess of the funds required to meet all payments due or to become due the contractor because of work performed and to be performed under the contract during the fiscal year, the Government reserves the right, after notice to the contractor, to reduce said reservation by the amount of such excess.

(End of clause)

52.233-1 DISPUTES. (JUL 2002)

(a) This contract is subject to the Contract Disputes Act of 1978, as amended (41 U.S.C. 601-613).

(b) Except as provided in the Act, all disputes arising under or relating to this contract shall be resolved under this clause.

(c) Claim, as used in this clause, means a written demand or written assertion by one of the contracting parties seeking, as a matter of right, the payment of money in a sum certain, the adjustment or interpretation of contract terms, or other relief arising under or relating to this contract. However, a written demand or written assertion by the Contractor seeking the payment of money exceeding $100,000 is not a claim under the Act until certified. A voucher, invoice, or other routine request for payment that is not in dispute when submitted is not a claim under the Act. The submission may be converted to a claim under the Act, by complying with the submission and certification

requirements of this clause, if it is disputed either as to liability or amount or is not acted upon in a reasonable time.

(d)(1) A claim by the Contractor shall be made in writing and, unless otherwise stated in this contract, submitted within 6 years after accrual of the claim to the Contracting Officer for a written decision. A claim by the Government against the Contractor shall be subject to a written decision by the Contracting Officer.

(2)(i) The contractors shall provide the certification specified in subparagraph (d)(2)(iii) of this clause when submitting any claim -

(A) Exceeding $100,000; or

(B) Regardless of the amount claimed, when using -

(1) Arbitration conducted pursuant to 5 U.S.C. 575-580; or

(2) Any other alternative means of dispute resolution (ADR) technique that the agency elects to handle in accordance with the Administrative Dispute Resolution Act (ADRA).

(ii) The certification requirement does not apply to issues in controversy that have not been submitted as all or part of a claim.

(iii) The certification shall state as follows: "I certify that the claim is made in good faith; that the supporting data are accurate and complete to the best of my knowledge and belief; that the amount requested accurately reflects the contract adjustment for which the Contractor believes the Government is liable; and that I am duly authorized to certify the claim on behalf of the Contractor.

(3) The certification may be executed by any person duly authorized to bind the Contractor with respect to the claim.

(e) For Contractor claims of $100,000 or less, the Contracting Officer must, if requested in writing by the Contractor, render a decision within 60 days of the request. For Contractor-certified claims over $100,000, the Contracting Officer must, within 60 days, decide the claim or notify the Contractor of the date by which the decision will be made.

(f) The Contracting Officer's decision shall be final unless the Contractor appeals or files a suit as provided in the Act.

(g) If the claim by the Contractor is submitted to the Contracting Officer or a claim by the Government is presented to the Contractor, the parties, by mutual consent, may agree to use alternative disput resolution (ADR). If the Contractor refuses an offer for ADR, the Contractor shall inform the Contracting Officer, in writing, of the Contractor's specific reasons for rejecting the request.

(h) The Government shall pay interest on the amount found due and unpaid from (1) the date the Contracting Officer receives the claim (certified, if required); or (2) the date that payment otherwise would be due, if that date is later, until the date of payment. With regard to claims having defective certifications, as defined in (FAR) 48 CFR 33.201, interest shall be paid from the date that the Contracting Officer initially receives the claim. Simple interest on claims shall be paid at the rate, fixed by the Secretary of the Treasury as provided in the Act, which is applicable to the period during which the Contracting Officer receives the claim and then at the rate applicable for each 6-month period as fixed by the Treasury Secretary during the pendency of the claim.

(i) The Contractor shall proceed diligently with performance of this contract, pending final resolution of any request for relief, claim, appeal, or action arising under the contract, and comply with any decision of the Contracting Officer.

(End of clause)

52.233-3 PROTEST AFTER AWARD (AUG. 1996)

(a) Upon receipt of a notice of protest (as defined in FAR 33.101) or a determination that a protest is likely (see FAR 33.102(d)), the Contracting Officer may, by written order to the Contractor, direct the Contractor to stop performance of the work called for by this contract. The order shall be specifically identified as a stop-work order issued under this clause. Upon receipt of the order, the Contractor shall immediately comply with its terms and take all reasonable steps to minimize the incurrence of costs allocable to the work covered by the order during the period of work stoppage. Upon receipt of the final decision in the protest, the Contracting Officer shall either--

(1) Cancel the stop-work order; or

(2) Terminate the work covered by the order as provided in the Default, or the Termination for Convenience of the Government, clause of this contract.

(b) If a stop-work order issued under this clause is canceled either before or after a final decision in the protest, the Contractor shall resume work. The Contracting Officer shall make an equitable adjustment in the delivery schedule or contract price, or both, and the contract shall be modified, in writing, accordingly, if--

(1) The stop-work order results in an increase in the time required for, or in the Contractor's cost properly allocable to, the performance of any part of this contract; and

(2) The Contractor asserts its right to an adjustment within 30 days after the end of the period of work stoppage; provided, that if the Contracting Officer decides the facts justify the action, the Contracting Officer may receive and act upon a proposal at any time before final payment under this contract.

(c) If a stop-work order is not canceled and the work covered by the order is terminated for the convenience of the Government, the Contracting Officer shall allow reasonable costs resulting from the stop-work order in arriving at the termination settlement.

(d) If a stop-work order is not canceled and the work covered by the order is terminated for default, the Contracting Officer shall allow, by equitable adjustment or otherwise, reasonable costs resulting from the stop-work order.

(e) The Government's rights to terminate this contract at any time are not affected by action taken under this clause.

(f) If, as the result of the Contractor's intentional or negligent misstatement, misrepresentation, or miscertification, a protest related to this contract is sustained, and the Government pays costs, as provided in FAR 33.102(b)(2) or 33.104(h)(1), the Government may require the Contractor to reimburse the Government the amount of such costs. In addition to any other remedy available, and pursuant to the requirements of Subpart 32.6, the Government may collect this debt by offsetting the amount against any payment due the Contractor under any contract between the Contractor and the Government.

(End of clause)

52.236-1 PERFORMANCE OF WORK BY THE CONTRACTOR (APR 1984)

The Contractor shall perform on the site, and with its own organization, work equivalent to at least fifteen (15) percent of the total amount of work to be performed under the contract. This percentage may be reduced by a supplemental agreement to this contract if, during performing the work, the Contractor requests a reduction and the

Contracting Officer determines that the reduction would be to the advantage of the Government.

(End of clause)

52.236-2 DIFFERING SITE CONDITIONS (APR 1984)

As prescribed in 36.502, insert the following clause in solicitations and contracts when a fixed-price construction contract or a fixed-price dismantling, demolition, or removal of improvements contract is contemplated and the contract amount is expected to exceed the small purchase limitation. The Contracting Officer may insert the clause in solicitations and contracts when a fixed-price construction or a fixed-price contract for dismantling, demolition, or removal of improvements is contemplated and the contract amount is expected to be within the small purchase limitation.

(a) The Contractor shall promptly, and before the conditions are disturbed, give a written notice to the Contracting Officer of

(1) subsurface or latent physical conditions at the site which differ materially from those indicated in this contract, or

(2) unknown physical conditions at the site, of an unusual nature, which differ materially from those ordinarily encountered and generally recognized as inhering in work of the character provided for in the contract.

(b) The Contracting Officer shall investigate the site conditions promptly after receiving the notice. If the conditions do materially so differ and cause an increase or decrease in the Contractor's cost of, or the time required for, performing any part of the work under this contract, whether or not changed as a result of the conditions, an equitable adjustment shall be made under this clause and the contract modified in writing accordingly.

(c) No request by the Contractor for an equitable adjustment to the contract under this clause shall be allowed, unless the Contractor has given the written notice required; provided, that the time prescribed in (a) above for giving written notice may be extended by the Contracting Officer.

(d) No request by the Contractor for an equitable adjustment to the contract for differing site conditions shall be allowed if made after final payment under this contract.

(End of clause)

52.236-3 SITE INVESTIGATION AND CONDITIONS AFFECTING THE WORK (APR 1984)

(a) The Contractor acknowledges that it has taken steps reasonably necessary to ascertain the nature and location of the work, and that it has investigated and satisfied itself as to the general and local conditions which can affect the work or its cost, including but not limited to

(1) conditions bearing upon transportation, disposal, handling, and storage of materials;

(2) the availability of labor, water, electric power, and roads;

(3) uncertainties of weather, river stages, tides, or similar physical conditions at the site;

(4) the conformation and conditions of the ground; and (5) the character of equipment and facilities needed preliminary to and during work performance. The Contractor also acknowledges that it has satisfied itself as to the

character, quality, and quantity of surface and subsurface materials or obstacles to be encountered insofar as this information is reasonably ascertainable from an inspection of the site, including all exploratory work done by the Government, as well as from the drawings and specifications made a part of this contract. Any failure of the Contractor to take the actions described and acknowledged in this paragraph will not relieve the Contractor from responsibility for estimating properly the difficulty and cost of successfully performing the work, or for proceeding to successfully perform the work without additional expense to the Government.

(b) The Government assumes no responsibility for any conclusions or interpretations made by the Contractor based on the information made available by the Government. Nor does the Government assume responsibility for any understanding reached or representation made concerning conditions which can affect the work by any of its officers or agents before the execution of this contract, unless that understanding or representation is expressly stated in this contract.

(End of clause)

52.236-4 PHYSICAL DATA (APR 1984)

Data and information furnished or referred to below is for the Contractor's information. The Government shall not be responsible for any interpretation of or conclusion drawn from the data or information by the Contractor.

(5) The indications of physical conditions on the drawings and in the specifications are the result of site investigations to aerial photographs and topographic surveys.

(6) **Weather conditions**. Information with respect by temperatures and precipitation may be obtained from the National Weather Service. Also see section 00800 paragraph **SP 16** "Time Extensions for Unsually Severe Weather."

(7) **Additional Data**. Additional data consisting of cross sections, river stage records, and records of borings, may be available for inspection at the U.S.Army Engineer District Memphis, Tennessee.

(End of clause)

52.236-5 MATERIAL AND WORKMANSHIP (APR 1984)

(a) All equipment, material, and articles incorporated into the work covered by this contract shall be new and of the most suitable grade for the purpose intended, unless otherwise specifically provided in this contract. References in the specifications to equipment, material, articles, or patented processes by trade name, make, or catalog number, shall be regarded as establishing a standard of quality and shall not be construed as limiting competition. The Contractor may, at its option, use any equipment, material, article, or process that, in the judgment of the Contracting Officer, is equal to that named in the specifications, unless otherwise specifically provided in this contract.

(b) The Contractor shall obtain the Contracting Officer's approval of the machinery and mechanical and other equipment to be incorporated into the work. When requesting approval, the Contractor shall furnish to the Contracting Officer the name of the manufacturer, the model number, and other information concerning the performance, capacity, nature, and rating of the machinery and mechanical and other equipment. When required by this contract or by the Contracting Officer, the Contractor shall also obtain the Contracting Officer's approval of the material or articles which the Contractor contemplates incorporating into the work. When requesting approval, the

Contractor shall provide full information concerning the material or articles. When directed to do so, the Contractor shall submit samples for approval at the Contractor's expense, with all shipping charges prepaid. Machinery, equipment, material, and articles that do not have the required approval shall be installed or used at the risk of subsequent rejection.

(c) All work under this contract shall be performed in a skillful and workmanlike manner. The Contracting Officer may require, in writing, that the Contractor remove from the work any employee the Contracting Officer deems incompetent, careless, or otherwise objectionable.

(End of clause)

52.236-6 SUPERINTENDENCE BY THE CONTRACTOR (APR 1984)

At all times during performance of this contract and until the work is completed and accepted, the Contractor shall directly superintend the work or assign and have on the worksite a competent superintendent who is satisfactory to the Contracting Officer and has authority to act for the Contractor.

(End of clause)

52.236-7 PERMITS AND RESPONSIBILITIES (NOV 1991)

The Contractor shall, without additional expense to the Government, be responsible for obtaining any necessary licenses and permits, and for complying with any Federal, State, and municipal laws, codes, and regulations applicable to the performance of the work. The Contractor shall also be responsible for all damages to persons or property that occur as a result of the Contractor's fault or negligence. The Contractor shall also be responsible for all materials delivered and work performed until completion and acceptance of the entire work, except for any completed unit of work which may have been accepted under the contract.

(End of clause)

52.236-8 OTHER CONTRACTS (APR 1984)

The Government may undertake or award other contracts for additional work at or near the site of the work under this contract. The Contractor shall fully cooperate with the other contractors and with Government employees and shall carefully adapt scheduling and performing the work under this contract to accommodate the additional work, heeding any direction that may be provided by the Contracting Officer. The Contractor shall not commit or permit any act that will interfere with the performance of work by any other contractor or by Government employees.

(End of clause)

52.236-9 PROTECTION OF EXISTING VEGETATION, STRUCTURES, EQUIPMENT, UTILITIES, AND IMPROVEMENTS (APR 1984)

(a) The Contractor shall preserve and protect all structures, equipment, and vegetation (such as trees, shrubs, and grass) on or adjacent to the work site, which are not to be removed and which do not unreasonably interfere with the work required under this contract. The Contractor shall only remove trees when specifically authorized to do so, and

shall avoid damaging vegetation that will remain in place. If any limbs or branches of trees are broken during contract performance, or by the careless operation of equipment, or by workmen, the Contractor shall trim those limbs or branches with a clean cut and paint the cut with a tree-pruning compound as directed by the Contracting Officer.

(b) The Contractor shall protect from damage all existing improvements and utilities

(1) at or near the work site, and

(2) on adjacent property of a third party, the locations of which are made known to or should be known by the Contractor. The Contractor shall repair any damage to those facilities, including those that are the property of a third party, resulting from failure to comply with the requirements of this contract or failure to exercise reasonable care in performing the work. If the Contractor fails or refuses to repair the damage promptly, the Contracting Officer may have the necessary work performed and charge the cost to the Contractor.

(End of clause)

52.236-10 OPERATIONS AND STORAGE AREAS (APR 1984)

(a) The Contractor shall confine all operations (including storage of materials) on Government premises to areas authorized or approved by the Contracting Officer. The Contractor shall hold and save the Government, its officers and agents, free and harmless from liability of any nature occasioned by the Contractor's performance.

(b) Temporary buildings (e.g., storage sheds, shops, offices) and utilities may be erected by the Contractor only with the approval of the Contracting Officer and shall be built with labor and materials furnished by the Contractor without expense to the Government. The temporary buildings and utilities shall remain the property of the Contractor and shall be removed by the Contractor at its expense upon completion of the work. With the written consent of the Contracting Officer, the buildings and utilities may be abandoned and need not be removed.

(c) The Contractor shall, under regulations prescribed by the Contracting Officer, use only established roadways, or use temporary roadways constructed by the Contractor when and as authorized by the Contracting Officer. When materials are transported in prosecuting the work, vehicles shall not be loaded beyond the loading capacity recommended by the manufacturer of the vehicle or prescribed by any Federal, State, or local law or regulation. When it is necessary to cross curbs or sidewalks, the Contractor shall protect them from damage. The Contractor shall repair or pay for the repair of any damaged curbs, sidewalks, or roads.

(End of clause)

52.236-11 USE AND POSSESSION PRIOR TO COMPLETION (APR 1984)

(a) The Government shall have the right to take possession of or use any completed or partially completed part of the work. Before taking possession of or using any work, the Contracting Officer shall furnish the Contractor a list of items of work remaining to be performed or corrected on those portions of the work that the Government intends to take possession of or use. However, failure of the Contracting Officer to list any item of work shall not relieve the Contractor of responsibility for complying with the terms of the contract. The Government's possession or use shall not be deemed an acceptance of any work under the contract.

(b) While the Government has such possession or use, the Contractor shall be relieved of the responsibility for the loss of or damage to the work resulting from the Government's possession or use, notwithstanding the terms of the clause in this contract entitled "Permits and Responsibilities." If prior possession or use by the Government delays

the progress of the work or causes additional expense to the Contractor, an equitable adjustment shall be made in the contract price or the time of completion, and the contract shall be modified in writing accordingly.

(End of clause)

52.236-12 CLEANING UP (APR 1984)

The Contractor shall at all times keep the work area, including storage areas, free from accumulations of waste materials. Before completing the work, the Contractor shall remove from the work and premises any rubbish, tools, scaffolding, equipment, and materials that are not the property of the Government. Upon completing the work, the Contractor shall leave the work area in a clean, neat, and orderly condition satisfactory to the Contracting Officer.

(End of clause)

52.236-13 ACCIDENT PREVENTION (NOV 1991)

(a) The Contractor shall provide and maintain work environments and procedures which will

(1) safeguard the public and Government personnel, property, materials, supplies, and equipment exposed to Contractor operations and activities;

(2) avoid interruptions of Government operations and delays in project completion dates; and

(3) control costs in the performance of this contract.

(b) For these purposes on contracts for construction or dismantling, demolition, or removal of improvements, the Contractor shall-

(1) Provide appropriate safety barricades, signs, and signal lights;

(2) Comply with the standards issued by the Secretary of Labor at 29 CFR Part 1926 and 29 CFR Part 1910; and

(3) Ensure that any additional measures the Contracting Officer determines to be reasonably necessary for the purposes are taken.

(c) If this contract is for construction or dismantling, demolition or removal of improvements with any Department of Defense agency or component, the Contractor shall comply with all pertinent provisions of the latest version of U.S. Army Corps of Engineers Safety and Health Requirements Manual, EM 385-1-1, in effect on the date of the solicitation.

(d) Whenever the Contracting Officer becomes aware of any noncompliance with these requirements or any condition which poses a serious or imminent danger to the health or safety of the public or Government personnel, the Contracting Officer shall notify the Contractor orally, with written confirmation, and request immediate initiation of corrective action. This notice, when delivered to the Contractor or the Contractor's representative at the work site, shall be deemed sufficient notice of the noncompliance and that corrective action is required. After receiving the notice, the Contractor shall immediately take corrective action. If the Contractor fails or refuses to promptly take corrective action, the Contracting Officer may issue an order stopping all or part of the work until satisfactory corrective action has been taken. The Contractor shall not be entitled to any equitable adjustment of the contract price or extension of the performance schedule on any stop work order issued under this clause.

(8) The Contractor shall insert this clause, including this paragraph (e), with appropriate changes in the designation of the parties, in subcontracts.

(End of clause)

52.236-15 SCHEDULES FOR CONSTRUCTION CONTRACTS (APR 1984)

(a) The Contractor shall, within five days after the work commences on the contract or another period of time determined by the Contracting Officer, prepare and submit to the Contracting Officer for approval three copies of a practicable schedule showing the order in which the Contractor proposes to perform the work, and the dates on which the Contractor contemplates starting and completing the several salient features of the work (including acquiring materials, plant, and equipment). The schedule shall be in the form of a progress chart of suitable scale to indicate appropriately the percentage of work scheduled for completion by any given date during the period. If the Contractor fails to submit a schedule within the time prescribed, the Contracting Officer may withhold approval of progress payments until the Contractor submits the required schedule.

(b) The Contractor shall enter the actual progress on the chart as directed by the Contracting Officer, and upon doing so shall immediately deliver three copies of the annotated schedule to the Contracting Officer. If, in the opinion of the Contracting Officer, the Contractor falls behind the approved schedule, the Contractor shall take steps necessary to improve its progress, including those that may be required by the Contracting Officer, without additional cost to the Government. In this circumstance, the Contracting Officer may require the Contractor to increase the number of shifts, overtime operations, days of work, and/or the amount of construction plant, and to submit for approval any supplementary schedule or schedules in chart form as the Contracting Officer deems necessary to demonstrate how the approved rate of progress will be regained.

(c) Failure of the Contractor to comply with the requirements of the Contracting Officer under this clause shall be grounds for a determination by the Contracting Officer that the Contractor is not prosecuting the work with sufficient diligence to ensure completion within the time specified in the contract. Upon making this determination, the Contracting Officer may terminate the Contractor's right to proceed with the work, or any separable part of it, in accordance with the default terms of this contract.

(End of clause)

52.236-16 QUANTITY SURVEYS (APR 1984)

(a) Quantity surveys shall be conducted, and the data derived from these surveys shall be used in computing the quantities of work performed and the actual construction completed and in place.

(b) The Government shall conduct the original and final surveys and make the computations based on them. The Contractor shall conduct the surveys for any periods for which progress payments are requested and shall make the computations based on these surveys. All surveys conducted by the Contractor shall be conducted under the direction of a representative of the Contracting Officer, unless the Contracting Officer waives this requirement in a specific instance.

(c) Promptly upon completing a survey, the Contractor shall furnish the originals of all field notes and all other records relating to the survey or to the layout of the work to the Contracting Officer, who shall use them as necessary to determine the amount of progress payments. The Contractor shall retain copies of all such material furnished to the Contracting Officer.

(End of clause)

52.236-21 SPECIFICATIONS AND DRAWINGS FOR CONSTRUCTION (FEB 1997)

(a) The Contractor shall keep on the work site a copy of the drawings and specifications and shall at all times give the Contracting Officer access thereto. Anything mentioned in the specifications and not shown on the drawings, or shown on the drawings and not mentioned in the specifications, shall be of like effect as if shown or mentioned in both. In case of difference between drawings and specifications, the specifications shall govern. In case of discrepancy in the figures, in the drawings, or in the specifications, the matter shall be promptly submitted to the Contracting Officer, who shall promptly make a determination in writing. Any adjustment by the Contractor without such a determination shall be at its own risk and expense. The Contracting Officer shall furnish from time to time such detailed drawings and other information as considered necessary, unless otherwise provided.

(b) Wherever in the specifications or upon the drawings the words "directed", "required", "ordered", "designated", "prescribed", or words of like import are used, it shall be understood that the "direction", "requirement", "order", "designation", or "prescription", of the Contracting Officer is intended and similarly the words "approved", "acceptable", "satisfactory", or words of like import shall mean "approved by," or "acceptable to", or "satisfactory to" the Contracting Officer, unless otherwise expressly stated.

(c) Where "as shown," as indicated", "as detailed", or words of similar import are used, it shall be understood that the reference is made to the drawings accompanying this contract unless stated otherwise. The word "provided" as used herein shall be understood to mean "provide complete in place," that is "furnished and installed".

(d) Shop drawings means drawings, submitted to the Government by the Contractor, subcontractor, or any lower tier subcontractor pursuant to a construction contract, showing in detail (1) the proposed fabrication and assembly of structural elements, and (2) the installation (i.e., fit, and attachment details) of materials or equipment. It includes drawings, diagrams, layouts, schematics, descriptive literature, illustrations, schedules, performance and test data, and similar materials furnished by the contractor to explain in detail specific portions of the work required by the contract. The Government may duplicate, use, and disclose in any manner and for any purpose shop drawings delivered under this contract.

(e) If this contract requires shop drawings, the Contractor shall coordinate all such drawings, and review them for accuracy, completeness, and compliance with contract requirements and shall indicate its approval thereon as evidence of such coordination and review. Shop drawings submitted to the Contracting Officer without evidence of the Contractor's approval may be returned for resubmission. The Contracting Officer will indicate an approval or disapproval of the shop drawings and if not approved as submitted shall indicate the Government's reasons therefor. Any work done before such approval shall be at the Contractor's risk. Approval by the Contracting Officer shall not relieve the Contractor from responsibility for any errors or omissions in such drawings, nor from responsibility for complying with the requirements of this contract, except with respect to variations described and approved in accordance with (f) below.

(f) If shop drawings show variations from the contract requirements, the Contractor shall describe such variations in writing, separate from the drawings, at the time of submission. If the Contracting Officer approves any such variation, the Contracting Officer shall issue an appropriate contract modification, except that, if the variation is minor or does not involve a change in price or in time of performance, a modification need not be issued.

(g) The Contractor shall submit to the Contracting Officer for approval four copies (unless otherwise indicated) of all shop drawings as called for under the various headings of these specifications. Three sets (unless otherwise indicated) of all shop drawings, will be retained by the Contracting Officer and one set will be returned to the Contractor.

(End of clause)

52.236-26 PRECONSTRUCTION CONFERENCE (FEB 1995)

If the Contracting Officer decides to conduct a preconstruction conference, the successful offeror will be notified and will be required to attend. The Contracting Officer's notification will include specific details regarding the date, time, and location of the conference, any need for attendance by subcontractors, and information regarding the items to be discussed.

(End of clause)

52.236-5000 PLANT AND MATERIAL REMOVAL AFTER CONTRACT TERMINATION (MAR 1995)--EFARS

Should this contract be terminated as provided in clause 52.232-5001 because of the failure of Congress to provide additional funds for its completion, the contractor may be permitted to remove plant and material on which payments for preparatory work have been made, subject to an equitable deduction from the amounts due the contractor to reimburse the United States for the unabsorbed value of such plant and material.

(End of clause)

52.242-13 BANKRUPTCY (JUL 1995)

In the event the Contractor enters into proceedings relating to bankruptcy, whether voluntary or involuntary, the Contractor agrees to furnish, by certified mail or electronic commerce method authorized by the contract, written notification of the bankruptcy to the Contracting Officer responsible for administering the contract. This notification shall be furnished within five days of the initiation of the proceedings relating to bankruptcy filing. This notification shall include the date on which the bankruptcy petition was filed, the identity of the court in which the bankruptcy petition was filed, and a listing of Government contract numbers and contracting offices for all Government contracts against which final payment has not been made. This obligation remains in effect until final payment under this contract.

(End of clause)

52.242-14 SUSPENSION OF WORK (APR 1984)

(a) The Contracting Officer may order the Contractor, in writing, to suspend, delay, or interrupt all or any part of the work of this contract for the period of time that the Contracting Officer determines appropriate for the convenience of the Government.

(b) If the performance of all or any part of the work is, for an unreasonable period of time, suspended, delayed, or interrupted (1) by an act of the Contracting Officer in the administration of this contract, or (2) by the Contracting Officer's failure to act within the time specified in this contract (or within a reasonable time if not specified), an adjustment shall be made for any increase in the cost of performance of this contract (excluding profit) necessarily caused by the unreasonable suspension, delay, or interruption, and the contract modified in writing accordingly. However, no adjustment shall be made under this clause for any suspension, delay, or interruption to the extent that performance would have been so suspended, delayed, or interrupted by any other cause, including the fault or negligence of the Contractor, or for which an equitable adjustment is provided for or excluded under any other term or condition of this contract. (c) A claim under this clause shall not be allowed (1) for any costs incurred more than

20 days before the Contractor shall have notified the Contracting Officer in writing of the act or failure to act involved (but this requirement shall not apply as to a claim resulting from a suspension order), and (2) unless the claim, in an amount stated, is asserted in writing as soon as practicable after the termination of the suspension, delay, or interruption, but not later than the date of final payment under the contract.

(End of clause)

52.243-4 CHANGES (AUG 1987)

(a) The Contracting Officer may, at any time, without notice to the sureties, if any, by written order designated or indicated to be a change order, make changes in the work within the general scope of the contract, including changes--

(1) In the specifications (including drawings and designs);

(2) In the method or manner of performance of the work;

(3) In the Government-furnished facilities, equipment, materials, services, or site; or

(4) Directing acceleration in the performance of the work.

(b) Any other written or oral order (which, as used in this paragraph (b), includes direction, instruction, interpretation, or determination) from the Contracting Officer that causes a change shall be treated as a change order under this clause; provided, that the Contractor gives the Contracting Officer written notice stating

(1) the date, circumstances, and source of the order and

(2) that the Contractor regards the order as a change order.

(c) Except as provided in this clause, no order, statement, or conduct of the Contracting Officer shall be treated as a change under this clause or entitle the Contractor to an equitable adjustment.

(d) If any change under this clause causes an increase or decrease in the Contractor's cost of, or the time required for, the performance of any part of the work under this contract, whether or not changed by any such order, the Contracting Officer shall make an equitable adjustment and modify the contract in writing. However, except for an adjustment based on defective specifications, no adjustment for any change under paragraph (b) of this clause shall be made for any costs incurred more than 20 days before the Contractor gives written notice as required. In the case of defective specifications for which the Government is responsible, the equitable adjustment shall include any increased cost reasonably incurred by the Contractor in attempting to comply with the defective specifications.

(e) The Contractor must assert its right to an adjustment under this clause within 30 days after

(1) receipt of a written change order under paragraph (a) of this clause or (2) the furnishing of a written notice under paragraph (b) of this clause, by submitting to the Contracting Officer a written statement describing the general nature and amount of the proposal, unless this period is extended by the Government. The statement of proposal for adjustment may be included in the notice under paragraph (b) above.

(f) No proposal by the Contractor for an equitable adjustment shall be allowed if asserted after final payment under this contract.

(End of clause)

52.245-2 GOVERNMENT PROPERTY (FIXED-PRICE CONTRACTS) (MAY 2004)

(a) Government-furnished property.

(1) Overseas contracts. If this contract is to be performed outside of the United States and its outlying areas, the words ``Government'' and ``Government-furnished'' (wherever they appear in this clause) shall be construed as ``United States Government'' and ``United States Government-furnished,'' respectively.

(2) The delivery or performance dates for this contract are based upon the expectation that Government-furnished property suitable for use (except for property furnished "as is") will be delivered to the Contractor at the times stated in the Schedule or, if not so stated, in sufficient time to enable the Contractor to meet the contract's delivery or performance dates.

(3) If Government-furnished property is received by the Contractor in a condition not suitable for the intended use, the Contractor shall, upon receipt of it, notify the Contracting Officer, detailing the facts, and, as directed by the Contracting Officer and at Government expense, either repair, modify, return, or otherwise dispose of the property. After completing the directed action and upon written request of the Contractor, the Contracting Officer shall make an equitable adjustment as provided in paragraph (h) of this clause.

(4) If Government-furnished property is not delivered to the Contractor by the required time, the Contracting Officer shall, upon the Contractor's timely written request, make a determination of the delay, if any, caused the Contractor and shall make an equitable adjustment in accordance with paragraph (h) of this clause.

(b) Changes in Government-furnished property. (1) The Contracting Officer may, by written notice, (i) decrease the Government-furnished property provided or to be provided under this contract, or (ii) substitute other Government-furnished property for the property to be provided by the Government, or to be acquired by the Contractor for the Government, under this contract. The Contractor shall promptly take such action as the Contracting Officer may direct regarding the removal, shipment, or disposal of the property covered by such notice.

(2) Upon the Contractor's written request, the Contracting Officer shall make an equitable adjustment to the contract in accordance with paragraph (h) of this clause, if the Government has agreed in the Schedule to make the property available for performing this contract and there is any--

(i) Decrease or substitution in this property pursuant to subparagraph (b)(1) of this clause; or

(ii) Withdrawal of authority to use this property, if provided under any other contract or lease.

(c) Title in Government property. (1) The Government shall retain title to all Government-furnished property.

(2) All Government-furnished property and all property acquired by the Contractor, title to which vests in the Government under this paragraph (collectively referred to as "Government property"), are subject to the provisions of this clause. However, special tooling accountable to this contract is subject to the provisions of the Special Tooling clause and is not subject to the provisions of this clause. Title to Government property shall not be affected by its incorporation into or attachment to any property not owned by the Government, nor shall Government property become a fixture or lose its identity as personal property by being attached to any real property.

(3) Title to each item of facilities and special test equipment acquired by the Contractor for the Government under this contract shall pass to and vest in the Government when its use in performing this contract commences or when the Government has paid for it, whichever is earlier, whether or not title previously vested in the Government.

(4) If this contract contains a provision directing the Contractor to purchase material for which the Government will reimburse the Contractor as a direct item of cost under this contract--

(i) Title to material purchased from a vendor shall pass to and vest in the Government upon the vendor's delivery of such material; and

(ii) Title to all other material shall pass to and vest in the Government upon--

(A) Issuance of the material for use in contract performance;

(B) Commencement of processing of the material or its use in contract performance; or

(C) Reimbursement of the cost of the material by the Government, whichever occurs first.

(d) Use of Government property. The Government property shall be used only for performing this contract, unless otherwise provided in this contract or approved by the Contracting Officer.

(e) Property administration. (1) The Contractor shall be responsible and accountable for all Government property provided under this contract and shall comply with Federal Acquisition Regulation (FAR) Subpart 45.5, as in effect on the date of this contract.

(2) The Contractor shall establish and maintain a program for the use, maintenance, repair, protection, and preservation of Government property in accordance with sound industrial practice and the applicable provisions of Subpart 45.5 of the FAR.

(3) If damage occurs to Government property, the risk of which has been assumed by the Government under this contract, the Government shall replace the items or the Contractor shall make such repairs as the Government directs. However, if the Contractor cannot effect such repairs within the time required, the Contractor shall dispose of the property as directed by the Contracting Officer. When any property for which the Government is responsible is replaced or repaired, the Contracting Officer shall make an equitable adjustment in accordance with paragraph (h) of this clause.

(4) The Contractor represents that the contract price does not include any amount for repairs or replacement for which the Government is responsible. Repair or replacement of property for which the Contractor is responsible shall be accomplished by the Contractor at its own expense.

(f) Access. The Government and all its designees shall have access at all reasonable times to the premises in which any Government property is located for the purpose of inspecting the Government property.

(g) Risk of loss. Unless otherwise provided in this contract, the Contractor assumes the risk of, and shall be responsible for, any loss or destruction of, or damage to, Government property upon its delivery to the Contractor or upon passage of title to the Government under paragraph (c) of this clause. However, the Contractor is not responsible for reasonable wear and tear to Government property or for Government property properly consumed in performing this contract.

(h) Equitable adjustment. When this clause specifies an equitable adjustment, it shall be made to any affected contract provision in accordance with the procedures of the Changes clause. When appropriate, the Contracting Officer may initiate an equitable adjustment in favor of the Government. The right to an equitable adjustment shall be the Contractor's exclusive remedy. The Government shall not be liable to suit for breach of contract for--

(1) Any delay in delivery of Government-furnished property;

(2) Delivery of Government-furnished property in a condition not suitable for its intended use;

(3) A decrease in or substitution of Government-furnished property; or

(4) Failure to repair or replace Government property for which the Government is responsible.

(i) Government property disposal. Except as provided in paragraphs (i)(1)(i), (i)(2), and (i)(8)(i) of this clause, the Contractor shall not dispose of Government property until authorized to do so by the Plant Clearance Officer.

(1) Scrap (to which the Government has obtained title under paragraph (c) of this clause).--(i) Contractor with an approved scrap procedure.--(A) The Contractor may dispose of scrap resulting from production or testing under this contract without Government approval. However, if the scrap requires demilitarization or is sensitive property, the Contractor shall submit the scrap on an inventory disposal schedule.

(B) For scrap from other than production or testing the Contractor may prepare scrap lists in lieu of inventory disposal schedules (provided such lists are consistent with the approved scrap procedures), except that inventory disposal schedules shall be submitted for scrap aircraft or aircraft parts and scrap that--

(1) Requires demilitarization;

(2) Is a classified item;

(3) Is generated from classified items;

(4) Contains hazardous materials or hazardous wastes;

(5) Contains precious metals; or

(6) Is dangerous to the public health, safety, or welfare.

(ii) Contractor without an approved scrap procedure. The Contractor shall submit an inventory disposal schedule for all scrap.

(2) Pre-disposal requirements. When the Contractor determines that a property item acquired or produced by the Contractor, to which the Government has obtained title under paragraph (c) of this clause, is no longer needed for performance of this contract, the Contractor, in the following order of priority:

(i) May purchase the property at the **acquisition** cost.

(ii) Shall make reasonable efforts to return unused property to the appropriate supplier at fair market value (less, if applicable, a reasonable restocking fee that is consistent with the supplier's customary practices).

(iii) Shall list, on Standard Form 1428, Inventory Disposal Schedule, property that was not purchased under paragraph (i)(2)(i) of this clause, could not be returned to a supplier, or could not be used in the performance of other Government contracts.

(3) Inventory disposal schedules.--(i) The Contractor shall use Standard Form 1428, Inventory Disposal Schedule, to identify--

(A) Government-furnished property that is no longer required for performance of this contract, provided the terms of another Government contract do not require the Government to furnish that property for performance of that contract; and

(B) Property acquired or produced by the Contractor, to which the Government has obtained title under paragraph (c) of this clause, that is no longer required for performance of that contract.

(ii) The Contractor may annotate inventory disposal schedules to identify property the Contractor wishes to purchase from the Government.

(iii) Unless the Plant Clearance Officer has agreed otherwise, or the contract requires electronic submission of inventory disposal schedules, the Contractor shall prepare separate inventory disposal schedules for--

(A) Special test equipment with commercial components;

(B) Special test equipment without commercial components;

(C) Printing equipment;

(D) Computers, components thereof, peripheral equipment, and related equipment;

(E) Precious Metals;

(F) Nonnuclear hazardous materials or hazardous wastes; or

(G) Nuclear materials or nuclear wastes.

(iv) Property with the same description, condition code, and reporting location may be grouped in a single line item. The Contractor shall describe special test equipment in sufficient detail to permit an understanding of the special test equipment's intended use.

(4) Submission requirements. The Contractor shall submit inventory disposal schedules to the Plant Clearance Officer no later than--

(i) Thirty days following the Contractor's determination that a Government property item is no longer required for performance of the contract;

(ii) Sixty days, or such longer period as may be approved by the Plant Clearance Officer, following completion of contract deliveries or performance; or

(iii) One hundred twenty days, or such longer period as may be approved by the Plant Clearance Officer, following contract termination in whole or in part.

(5) Corrections. The Plant Clearance Officer may require the Contractor to correct an inventory disposal schedule or may reject a schedule if the property identified on the schedule is not accountable under this contract or is not in the quantity or condition indicated.

(6) Postsubmission adjustments. The Contractor shall provide the Plant Clearance Officer at least 10 working days advance written notice of its intent to remove a property item from an approved inventory disposal schedule. Unless the Plant Clearance Officer objects to the intended schedule adjustment within the notice period, the Contractor may make the adjustment upon expiration of the notice period.

(7) Storage.--

(i) The Contractor shall store the property identified on an inventory disposal schedule pending receipt of disposal instructions. The Government's failure to provide disposal instructions within 120 days following acceptance of an inventory disposal schedule might entitle the Contractor to an equitable adjustment for costs incurred to store such property on or after the 121st day.

(ii) The Contractor shall obtain the Plant Clearance Officer's approval to remove Government property from the premises at which the property is currently located prior to receipt of final disposition instructions. If approval is granted, any costs incurred by the Contractor to transport or store the property shall not increase the price or fee of

any Government contract. The storage facility shall be appropriate for assuring the property's physical safety and suitability for use. Approval does not relieve the Contractor of any liability under this contract for such property.

(8) Disposition instructions.

(i) If the Government does not provide disposition instructions to the Contractor within 45 days following acceptance of a scrap list, the Contractor may dispose of the listed scrap in accordance with the Contractor's approved scrap procedures.

(ii) The Contractor shall prepare for shipment, deliver f.o.b. origin, or dispose of Government property as directed by the Plant Clearance Officer. The Contractor shall remove and destroy any markings identifying the property as Government property prior to disposing of the property.

(iii) The Contracting Officer may require the Contractor to demilitarize the property prior to shipment or disposal. Any equitable adjustment incident to the Contracting Officer's direction to demilitarize Government property shall be made in accordance with paragraph (h) of this clause.

(9) Disposal proceeds. The Contractor shall credit the net proceeds from the disposal of Government property to the price or cost of work covered by this contract or to the Government as the Contracting Officer directs.

(10) Subcontractor inventory disposal schedules. The Contractor shall require a subcontractor that is using property accountable under this contract at a subcontractor-managed site to submit inventory disposal schedules to the Contractor in sufficient time for the Contractor to comply with the requirements of paragraph (i)(4) of this clause.

(j) Abandonment of Government property.

(1) The Government will not abandon sensitive Government property without the Contractor's written consent.

(2) The Government, upon notice to the Contractor, may abandon any nonsensitive Government property in place at which time all obligations of the Government regarding such abandoned property shall cease.

(3) The Government has no obligation to restore or rehabilitate the Contractor's premises under any circumstances; however, if Government-furnished property is withdrawn or is unsuitable for the intended use, or if other Government property is substituted, then the equitable adjustment under paragraph (h) of this clause may properly include restoration or rehabilitation costs.

(k) Communications. All communications under this clause shall be in writing.

(l) Overseas contracts. If this contract is to be performed outside of the United States of America, its territories, or possessions, the words "Government" and "Government-furnished" (wherever they appear in this clause) shall be construed as "United States Government" and "United States Government-furnished," respectively.

(End of clause)

52.246-12 INSPECTION OF CONSTRUCTION (AUG 1996)

(a) Definition. "Work" includes, but is not limited to, materials, workmanship, and manufacture and fabrication of components.

(b) The Contractor shall maintain an adequate inspection system and perform such inspections as will ensure that the work performed under the contract conforms to contract requirements. The Contractor shall maintain complete

inspection records and make them available to the Government. All work shall be conducted under the general direction of the Contracting Officer and is subject to Government inspection and test at all places and at all reasonable times before acceptance to ensure strict compliance with the terms of the contract.

(c) Government inspections and tests are for the sole benefit of the Government and do not--

(1) Relieve the Contractor of responsibility for providing adequate quality control measures;

(2) Relieve the Contractor of responsibility for damage to or loss of the material before acceptance;

(3) Constitute or imply acceptance; or

(4) Affect the continuing rights of the Government after acceptance of the completed work under paragraph (i) of this section.

(d) The presence or absence of a Government inspector does not relieve the Contractor from any contract requirement, nor is the inspector authorized to change any term or condition of the specification without the Contracting Officer's written authorization.

(e) The Contractor shall promptly furnish, at no increase in contract price, all facilities, labor, and material reasonably needed for performing such safe and convenient inspections and tests as may be required by the Contracting Officer. The Government may charge to the Contractor any additional cost of inspection or test when work is not ready at the time specified by the Contractor for inspection or test, or when prior rejection makes reinspection or retest necessary. The Government shall perform all inspections and tests in a manner that will not unnecessarily delay the work. Special, full size, and performance tests shall be performed as described in the contract.

(f) The Contractor shall, without charge, replace or correct work found by the Government not to conform to contract requirements, unless in the public interest the Government consents to accept the work with an appropriate adjustment in contract price. The Contractor shall promptly segregate and remove rejected material from the premises.

(g) If the Contractor does not promptly replace or correct rejected work, the Government may (1) by contract or otherwise, replace or correct the work and charge the cost to the Contractor or (2) terminate for default the Contractor's right to proceed.

(h) If, before acceptance of the entire work, the Government decides to examine already completed work by removing it or tearing it out, the Contractor, on request, shall promptly furnish all necessary facilities, labor, and material. If the work is found to be defective or nonconforming in any material respect due to the fault of the Contractor or its subcontractors, the Contractor shall defray the expenses of the examination and of satisfactory reconstruction. However, if the work is found to meet contract requirements, the Contracting Officer shall make an equitable adjustment for the additional services involved in the examination and reconstruction, including, if completion of the work was thereby delayed, an extension of time.

(i) Unless otherwise specified in the contract, the Government shall accept, as promptly as practicable after completion and inspection, all work required by the contract or that portion of the work the Contracting Officer determines can be accepted separately. Acceptance shall be final and conclusive except for latent defects, fraud, gross mistakes amounting to fraud, or the Government's rights under any warranty or guarantee.

(End of clause)

52.246-21 WARRANTY OF CONSTRUCTION (MAR 1994)

(a) In addition to any other warranties in this contract, the Contractor warrants, except as provided in paragraph (i) of this clause, that work performed under this contract conforms to the contract requirements and is free of any defect in equipment, material, or design furnished, or workmanship performed by the Contractor or any subcontractor or supplier at any tier.

(b) This warranty shall continue for a period of 1 year from the date of final acceptance of the work. If the Government takes possession of any part of the work before final acceptance, this warranty shall continue for a period of 1 year from the date the Government takes possession.

(c) The Contractor shall remedy at the Contractor's expense any failure to conform, or any defect. In addition, the Contractor shall remedy at the Contractor's expense any damage to Government-owned or controlled real or personal property, when that damage is the result of--

(1) The Contractor's failure to conform to contract requirements; or

(2) Any defect of equipment, material, workmanship, or design furnished.

(d) The Contractor shall restore any work damaged in fulfilling the terms and conditions of this clause. The Contractor's warranty with respect to work repaired or replaced will run for 1 year from the date of repair or replacement.

(e) The Contracting Officer shall notify the Contractor, in writing, within a reasonable time after the discovery of any failure, defect, or damage.

(f) If the Contractor fails to remedy any failure, defect, or damage within a reasonable time after receipt of notice, the Government shall have the right to replace, repair, or otherwise remedy the failure, defect, or damage at the Contractor's expense.
(g) With respect to all warranties, express or implied, from subcontractors, manufacturers, or suppliers for work performed and materials furnished under this contract, the Contractor shall--

(1) Obtain all warranties that would be given in normal commercial practice;

(2) Require all warranties to be executed, in writing, for the benefit of the Government, if directed by the Contracting Officer; and

(3) Enforce all warranties for the benefit of the Government, if directed by the Contracting Officer.

(h) In the event the Contractor's warranty under paragraph (b) of this clause has expired, the Government may bring suit at its expense to enforce a subcontractor's, manufacturer's, or supplier's warranty.

(i) Unless a defect is caused by the negligence of the Contractor or subcontractor or supplier at any tier, the Contractor shall not be liable for the repair of any defects of material or design furnished by the Government nor for the repair of any damage that results from any defect in Government-furnished material or design.

(j) This warranty shall not limit the Government's rights under the Inspection and Acceptance clause of this contract with respect to latent defects, gross mistakes, or fraud.

(End of clause)

52.248-3 VALUE ENGINEERING--CONSTRUCTION (FEB 2000)

(a) General. The Contractor is encouraged to develop, prepare, and submit value engineering change proposals (VECP's) voluntarily. The Contractor shall share in any instant contract savings realized from accepted VECP's, in accordance with paragraph (f) below.

(b) Definitions. "Collateral costs," as used in this clause, means agency costs of operation, maintenance, logistic support, or Government-furnished property.

"Collateral savings," as used in this clause, means those measurable net reductions resulting from a VECP in the agency's overall projected collateral costs, exclusive of acquisition savings, whether or not the acquisition cost changes.

"Contractor's development and implementation costs," as used in this clause, means those costs the Contractor incurs on a VECP specifically in developing, testing, preparing, and submitting the VECP, as well as those costs the Contractor incurs to make the contractual changes required by Government acceptance of a VECP.

"Government costs," as used in this clause, means those agency costs that result directly from developing and implementing the VECP, such as any net increases in the cost of testing, operations, maintenance, and logistic support. The term does not include the normal administrative costs of processing the VECP.

"Instant contract savings," as used in this clause, means the estimated reduction in Contractor cost of performance resulting from acceptance of the VECP, minus allowable Contractor's development and implementation costs, including subcontractors' development and implementation costs (see paragraph (h) below).

"Value engineering change proposal (VECP)" means a proposal that--

(1) Requires a change to this, the instant contract, to implement; and

(2) Results in reducing the contract price or estimated cost without impairing essential functions or characteristics; provided, that it does not involve a change--

(i) In deliverable end item quantities only; or

(ii) To the contract type only.

(c) VECP preparation. As a minimum, the Contractor shall include in each VECP the information described in subparagraphs (1) through (7) below. If the proposed change is affected by contractually required configuration management or similar procedures, the instructions in those procedures relating to format, identification, and priority assignment shall govern VECP preparation. The VECP shall include the following:

(1) A description of the difference between the existing contract requirement and that proposed, the comparative advantages and disadvantages of each, a justification when an item's function or characteristics are being altered, and the effect of the change on the end item's performance.

(2) A list and analysis of the contract requirements that must be changed if the VECP is accepted, including any suggested specification revisions.

(3) A separate, detailed cost estimate for

(i) the affected portions of the existing contract requirement and

(ii) the VECP. The cost reduction associated with the VECP shall take into account the Contractor's allowable development and implementation costs, including any amount attributable to subcontracts under paragraph (h) below.

(4) A description and estimate of costs the Government may incur in implementing the VECP, such as test and evaluation and operating and support costs.

(5) A prediction of any effects the proposed change would have on collateral costs to the agency.

(6) A statement of the time by which a contract modification accepting the VECP must be issued in order to achieve the maximum cost reduction, noting any effect on the contract completion time or delivery schedule.

(7) Identification of any previous submissions of the VECP, including the dates submitted, the agencies and contract numbers involved, and previous Government actions, if known.

(d) Submission. The Contractor shall submit VECP's to the Resident Engineer at the worksite, with a copy to the Contracting Officer.

(e) Government action.

(1) The Contracting Officer will notify the Contractor of the status of the VECP within 45 calendar days after the contracting office receives it. If additional time is required, the Contracting Officer will notify the Contractor within the 45-day period and provide the reason for the delay and the expected date of the decision. The Government will process VECP's expeditiously; however, it shall not be liable for any delay in acting upon a VECP.

If the VECP is not accepted, the Contracting Officer will notify the Contractor in writing, explaining the reasons for rejection. The Contractor may withdraw any VECP, in whole or in part, at any time before it is accepted by the Government. The Contracting Officer may require that the Contractor provide written notification before undertaking significant expenditures for VECP effort.

Any VECP may be accepted, in whole or in part, by the Contracting Officer's award of a modification to this contract citing this clause. The Contracting Officer may accept the VECP, even though an agreement on price reduction has not been reached, by issuing the Contractor a notice to proceed with the change. Until a notice to proceed is issued or a contract modification applies a VECP to this contract, the Contractor shall perform in accordance with the existing contract. The decision to accept or reject all or part of any VECP is a unilateral decision made solely at the discretion of the Contracting Officer.

(f) Sharing.

(1) Rates. The Government's share of savings is determined by subtracting Government costs from instant contract savings and multiplying the result by

(i) 45 percent for fixed-price contracts or

(ii) 75 percent for cost-reimbursement contracts.

(2) Payment. Payment of any share due the Contractor for use of a VECP on this contract shall be authorized by a modification to this contract to--

(i) Accept the VECP;

(ii) Reduce the contract price or estimated cost by the amount of instant contract savings; and

(iii) Provide the Contractor's share of savings by adding the amount calculated to the contract price or fee.

(g) Collateral savings. If a VECP is accepted, the Contracting Officer will increase the instant contract amount by 20 percent of any projected collateral savings determined to be realized in a typical year of use after subtracting any

Government costs not previously offset. However, the Contractor's share of collateral savings will not exceed the contract's firm-fixed-price or estimated cost, at the time the VECP is accepted, or $100,000, whichever is greater. The Contracting Officer is the sole determiner of the amount of collateral savings.

(h) Subcontracts. The Contractor shall include an appropriate value engineering clause in any subcontract of $50,000 or more and may include one in subcontracts of lesser value. In computing any adjustment in this contract's price under paragraph (f) above, the Contractor's allowable development and implementation costs shall include any subcontractor's allowable development and implementation costs clearly resulting from a VECP accepted by the Government under this contract, but shall exclude any value engineering incentive payments to a subcontractor. The Contractor may choose any arrangement for subcontractor value engineering incentive payments; provided, that these payments shall not reduce the Government's share of the savings resulting from the VECP.

(i) Data. The Contractor may restrict the Government's right to use any part of a VECP or the supporting data by marking the following legend on the affected parts:

"These data, furnished under the Value Engineering-- Construction clause of contract . . . . . , shall not be disclosed outside the Government or duplicated, used, or disclosed, in whole or in part, for any purpose other than to evaluate a value engineering change proposal submitted under the clause. This restriction does not limit the Government's right to use information contained in these data if it has been obtained or is otherwise available from the Contractor or from another source without limitations." If a VECP is accepted, the Contractor hereby grants the Government unlimited rights in the VECP and supporting data, except that, with respect to data qualifying and submitted as limited rights technical data, the Government shall have the rights specified in the contract modification implementing the VECP and shall appropriately mark the data. (The terms "unlimited rights" and "limited rights" are defined in Part 27 of the Federal Acquisition Regulation.)

(End of clause)

52.249-2 TERMINATION FOR CONVENIENCE OF THE GOVERNMENT (FIXED-PRICE) (MAY 2004)

(a) The Government may terminate performance of work under this contract in whole or, from time to time, in part if the Contracting Officer determines that a termination is in the Government's interest. The Contracting Officer shall terminate by delivering to the Contractor a Notice of Termination specifying the extent of termination and the effective date.

(b) After receipt of a Notice of Termination, and except as directed by the Contracting Officer, the Contractor shall immediately proceed with the following obligations, regardless of any delay in determining or adjusting any amounts due under this clause:

(1) Stop work as specified in the notice.

(2) Place no further subcontracts or orders (referred to as subcontracts in this clause) for materials, services, or facilities, except as necessary to complete the continued portion of the contract.

(3) Terminate all subcontracts to the extent they relate to the work terminated.

(4) Assign to the Government, as directed by the Contracting Officer, all right, title, and interest of the Contractor under the subcontracts terminated, in which case the Government shall have the right to settle or to pay any termination settlement proposal arising out of those terminations.

(5) With approval or ratification to the extent required by the Contracting Officer, settle all outstanding liabilities and termination settlement proposals arising from the termination of subcontracts; the approval or ratification will be final for purposes of this clause.

(6) As directed by the Contracting Officer, transfer title and deliver to the Government (i) the fabricated or unfabricated parts, work in process, completed work, supplies, and other material produced or acquired for the work terminated, and (ii) the completed or partially completed plans, drawings, information, and other property that, if the contract had been completed, would be required to be furnished to the Government.

(7) Complete performance of the work not terminated.

(8) Take any action that may be necessary, or that the Contracting Officer may direct, for the protection and preservation of the property related to this contract that is in the possession of the Contractor and in which the Government has or may acquire an interest.

(9) Use its best efforts to sell, as directed or authorized by the Contracting Officer, any property of the types referred to in subparagraph (b)(6) of this clause; provided, however, that the Contractor (i) is not required to extend credit to any purchaser and (ii) may acquire the property under the conditions prescribed by, and at prices approved by, the Contracting Officer. The proceeds of any transfer or disposition will be applied to reduce any payments to be made by the Government under this contract, credited to the price or cost of the work, or paid in any other manner directed by the Contracting Officer.

(c) The Contractor shall submit complete termination inventory schedules no later than 120 days from the effective date of termination, unless extended in writing by the Contracting Officer upon written request of the Contractor within this 120-day period.

(d) After expiration of the plant clearance period as defined in Subpart 49.001 of the Federal Acquisition Regulation, the Contractor may submit to the Contracting Officer a list, certified as to quantity and quality, of termination inventory not previously disposed of, excluding items authorized for disposition by the Contracting Officer. The Contractor may request the Government to remove those items or enter into an agreement for their storage. Within 15 days, the Government will accept title to those items and remove them or enter into a storage agreement. The Contracting Officer may verify the list upon removal of the items, or if stored, within 45 days from submission of the list, and shall correct the list, as necessary, before final settlement.

(e) After termination, the Contractor shall submit a final termination settlement proposal to the Contracting Officer in the form and with the certification prescribed by the Contracting Officer. The Contractor shall submit the proposal promptly, but no later than 1 year from the effective date of termination, unless extended in writing by the Contracting Officer upon written request of the Contractor within this 1-year period. However, if the Contracting Officer determines that the facts justify it, a termination settlement proposal may be received and acted on after 1 year or any extension. If the Contractor fails to submit the proposal within the time allowed, the Contracting Officer may determine, on the basis of information available, the amount, if any, due the Contractor because of the termination and shall pay the amount determined.

(f) Subject to paragraph (e) of this clause, the Contractor and the Contracting Officer may agree upon the whole or any part of the amount to be paid or remaining to be paid because of the termination. The amount may include a reasonable allowance for profit on work done. However, the agreed amount, whether under this paragraph (g) or paragraph (g) of this clause, exclusive of costs shown in subparagraph (g)(3) of this clause, may not exceed the total contract price as reduced by (1) the amount of payments previously made and (2) the contract price of work not terminated. The contract shall be modified, and the Contractor paid the agreed amount. Paragraph (g) of this clause shall not limit, restrict, or affect the amount that may be agreed upon to be paid under this paragraph.

(g) If the Contractor and the Contracting Officer fail to agree on the whole amount to be paid because of the termination of work, the Contracting Officer shall pay the Contractor the amounts determined by the Contracting Officer as follows, but without duplication of any amounts agreed on under paragraph (f) of this clause:

(1) The contract price for completed supplies or services accepted by the Government (or sold or acquired under subparagraph (b)(9) of this clause) not previously paid for, adjusted for any saving of freight and other charges.

(2) The total of--

(i) The costs incurred in the performance of the work terminated, including initial costs and preparatory expense allocable thereto, but excluding any costs attributable to supplies or services paid or to be paid under subparagraph (f)(1) of this clause;

(ii) The cost of settling and paying termination settlement proposals under terminated subcontracts that are properly chargeable to the terminated portion of the contract if not included in subdivision (g)(2)(i) of this clause; and

(iii) A sum, as profit on subdivision (g)(2)(i) of this clause, determined by the Contracting Officer under 49.202 of the Federal Acquisition Regulation, in effect on the date of this contract, to be fair and reasonable; however, if it appears that the Contractor would have sustained a loss on the entire contract had it been completed, the Contracting Officer shall allow no profit under this subdivision (iii) and shall reduce the settlement to reflect the indicated rate of loss.

(3) The reasonable costs of settlement of the work terminated, including--

(i) Accounting, legal, clerical, and other expenses reasonably necessary for the preparation of termination settlement proposals and supporting data;

(ii) The termination and settlement of subcontracts (excluding the amounts of such settlements); and

(iii) Storage, transportation, and other costs incurred, reasonably necessary for the preservation, protection, or disposition of the termination inventory.

(h) Except for normal spoilage, and except to the extent that the Government expressly assumed the risk of loss, the Contracting Officer shall exclude from the amounts payable to the Contractor under paragraph (g) of this clause, the fair value, as determined by the Contracting Officer, of property that is destroyed, lost, stolen, or damaged so as to become undeliverable to the Government or to a buyer.

(i) The cost principles and procedures of Part 31 of the Federal Acquisition Regulation, in effect on the date of this contract, shall govern all costs claimed, agreed to, or determined under this clause.

(j) The Contractor shall have the right of appeal, under the Disputes clause, from any determination made by the Contracting Officer under paragraph (e), (g), or (l) of this clause, except that if the Contractor failed to submit the termination settlement proposal or request for equitable adjustment within the time provided in paragraph (e) or (l), respectively, and failed to request a time extension, there is no right of appeal.

(k) In arriving at the amount due the Contractor under this clause, there shall be deducted--

(1) All unliquidated advance or other payments to the Contractor under the terminated portion of this contract;

(2) Any claim which the Government has against the Contractor under this contract; and

(3) The agreed price for, or the proceeds of sale of, materials, supplies, or other things acquired by the Contractor or sold under the provisions of this clause and not recovered by or credited to the Government.

(l) If the termination is partial, the Contractor may file a proposal with the Contracting Officer for an equitable adjustment of the price(s) of the continued portion of the contract. The Contracting Officer shall make any equitable adjustment agreed upon. Any proposal by the Contractor for an equitable adjustment under this clause shall be requested within 90 days from the effective date of termination unless extended in writing by the Contracting Officer.

(m)(1) The Government may, under the terms and conditions it prescribes, make partial payments and payments against costs incurred by the Contractor for the terminated portion of the contract, if the Contracting Officer believes the total of these payments will not exceed the amount to which the Contractor will be entitled.

(2) If the total payments exceed the amount finally determined to be due, the Contractor shall repay the excess to the Government upon demand, together with interest computed at the rate established by the Secretary of the Treasury under 50 U.S.C. App. 1215(b)(2). Interest shall be computed for the period from the date the excess payment is received by the Contractor to the date the excess is repaid. Interest shall not be charged on any excess payment due to a reduction in the Contractor's termination settlement proposal because of retention or other disposition of termination inventory until 10 days after the date of the retention or disposition, or a later date determined by the Contracting Officer because of the circumstances.

(n) Unless otherwise provided in this contract or by statute, the Contractor shall maintain all records and documents relating to the terminated portion of this contract for 3 years after final settlement. This includes all books and other evidence bearing on the Contractor's costs and expenses under this contract. The Contractor shall make these records and documents available to the Government, at the Contractor's office, at all reasonable times, without any direct charge. If approved by the Contracting Officer, photographs, microphotographs, or other authentic reproductions may be maintained instead of original records and documents.

(End of clause)

52.249-10 DEFAULT (FIXED-PRICE CONSTRUCTION) (APR 1984)

(a) If the Contractor refuses or fails to prosecute the work or any separable part, with the diligence that will insure its completion within the time specified in this contract including any extension, or fails to complete the work within this time, the Government may, by written notice to the Contractor, terminate the right to proceed with the work (or the separable part of the work) that has been delayed. In this event, the Government may take over the work and complete it by contract or otherwise, and may take possession of and use any materials, appliances, and plant on the work site necessary for completing the work. The Contractor and its sureties shall be liable for any damage to the Government resulting from the Contractor's refusal or failure to complete the work within the specified time, whether or not the Contractor's right to proceed with the work is terminated. This liability includes any increased costs incurred by the Government in completing the work.

(b) The Contractor's right to proceed shall not be terminated nor the Contractor charged with damages under this clause, if--

(1) The delay in completing the work arises from unforeseeable causes beyond the control and without the fault or negligence of the Contractor. Examples of such causes include

(i) acts of God or of the public enemy,

(ii) acts of the Government in either its sovereign or contractual capacity,

(iii) acts of another Contractor in the performance of a contract with the Government,

(iv) fires,

(v) floods,

(vi) epidemics,

(vii) quarantine restrictions,

(viii) strikes,

(ix) freight embargoes,

(x) unusually severe weather, or delays of subcontractors or suppliers at any tier arising from unforeseeable causes beyond the control and without the fault or negligence of both the Contractor and the subcontractors or suppliers; and

(2) The Contractor, within 10 days from the beginning of any delay (unless extended by the Contracting Officer), notifies the Contracting Officer in writing of the causes of delay. The Contracting Officer shall ascertain the facts and the extent of delay. If, in the judgment of the Contracting Officer, the findings of fact warrant such action, the time for completing the work shall be extended. The findings of the Contracting Officer shall be final and conclusive on the parties, but subject to appeal under the Disputes clause.

(c) If, after termination of the Contractor's right to proceed, it is determined that the Contractor was not in default, or that the delay was excusable, the rights and obligations of the parties will be the same as if the termination had been issued for the convenience of the Government.

The rights and remedies of the Government in this clause are in addition to any other rights and remedies provided by law or under this contract.

(End of clause)

52.249-5000 BASIS FOR SETTLEMENT OF PROPOSALS

Actual costs will be used to determine equipment costs for a settlement proposal submitted on the total cost basis under FAR 49.206-2(b). In evaluating a terminations settlement proposal using the total cost basis, the following principles will be applied to determine allowable equipment costs:

(9) Actual costs for each piece of equipment, or groups of similar serial or series equipment, need not be available in the contractor's accounting records to determine total actual equipment costs.

(10) If equipment costs have been allocated to a contract using predetermined rates , those charges will be adjusted to actual costs.

(3) Recorded job costs adjusted for unallowable expenses will be used to determine equipment operating expenses.

(4) Ownership costs (depreciation) will be determined using the contractor's depreciation schedule (subject to the provisions of FAR 31.205-11).

(5) License, taxes, storage and insurance costs are normally recovered as an indirect expense and unless the contractor charges these costs directly to contracts, they will be recovered through the indirect expense rate. (EFARS 52.249-5000)

(End of Clause)

52.253-1 COMPUTER GENERATED FORMS (JAN 1991)

(a) Any data required to be submitted on a Standard or Optional Form prescribed by the Federal Acquisition Regulation (FAR) may be submitted on a computer generated version of the form, provided there is no change to

the name, content, or sequence of the data elements on the form, and provided the form carries the Standard or Optional Form number and edition date.

(b) Unless prohibited by agency regulations, any data required to be submitted on an agency unique form prescribed by an agency supplement to the FAR may be submitted on a computer generated version of the form provided there is no change to the name, content, or sequence of the data elements on the form and provided the form carries the agency form number and edition date.

(11) If the Contractor submits a computer generated version of a form that is different than the required form, then the rights and obligations of the parties will be determined based on the content of the required form.

(End of clause)

252.201-7000 CONTRACTING OFFICER'S REPRESENTATIVE (DEC 1991)

(a) "Definition. Contracting officer's representative" means an individual designated in accordance with subsection 201.602-2 of the Defense Federal Acquisition Regulation Supplement and authorized in writing by the contracting officer to perform specific technical or administrative functions.

(b) If the Contracting Officer designates a contracting officer's representative (COR), the Contractor will receive a copy of the written designation. It will specify the extent of the COR's authority to act on behalf of the contracting officer. The COR is not authorized to make any commitments or changes that will affect price, quality, quantity, delivery, or any other term or condition of the contract.

(End of clause)

252.203-7001 PROHIBITION ON PERSONS CONVICTED OF FRAUD OR OTHER DEFENSE-CONTRACT-RELATED FELONIES (MAR 1999)

(a) Definitions. As used in this clause—

(1) “Arising out of a contract with the DoD” means any act in connection with—

(i) Attempting to obtain;

(ii) Obtaining, or

(iii) Performing a contract or first-tier subcontract of any agency, department, or component of the Department of Defense (DoD).

(2) “Conviction of fraud or any other felony” means any conviction for fraud or a felony in violation of state or Federal criminal statutes, whether entered on a verdict or plea, including a plea of *nolo contendere*, for which sentence has been imposed.

(3) “Date of conviction” means the date judgment was entered against the individual.

(b) Any individual who is convicted after September 29, 1988, of fraud or any other felony arising out of a contract with the DoD is prohibited from serving--

(1) In a management or supervisory capacity on any DoD contract or first-tier subcontract;

(2) On the board of directors of any DoD contractor or first-tier subcontractor;

(3) As a consultant, agent, or representative for any DoD contractor or first-tier subcontractor; or

(4) In any other capacity with the authority to influence, advise, or control the decisions of any DoD contractor or subcontractor with regard to any DoD contract or first-tier subcontract.

(c) Unless waived, the prohibition in paragraph (b) of this clause applies for not less than 5 years from the date of conviction.

(d) 10 U.S.C. 2408 provides that a defense contractor or first-tier subcontractor shall be subject to a criminal penalty of not more than $500,000 if convicted of knowingly—

(1) Employing a person under a prohibition specified in paragraph (b) of this clause; or

(2) Allowing such a person to serve on the board of directors of the contractor or first-tier subcontractor.

(e) In addition to the criminal penalties contained in 10 U.S.C. 2408, the Government may consider other available remedies, such as—

(1) Suspension or debarment;

(2) Cancellation of the contract at no cost to the Government; or

(3) Termination of the contract for default.

(f) The Contractor may submit written requests for waiver of the prohibition in paragraph (b) of this clause to the Contracting Officer. Requests shall clearly identify—

(1) The person involved;

(2) The nature of the conviction and resultant sentence or punishment imposed;

(3) The reasons for the requested waiver; and

(4) An explanation of why a waiver is in the interest of national security.

(g) The Contractor agrees to include the substance of this clause, appropriately modified to reflect the identity and relationship of the parties, in all first-tier subcontracts exceeding the simplified acquisition threshold in Part 2 of the Federal Acquisition Regulation, except those for commercial items or components.

(h) Pursuant to 10 U.S.C. 2408(c), defense contractors and subcontractors may obtain information as to whether a particular person has been convicted of fraud or any other felony arising out of a contract with the DoD by contacting The Office of Justice Programs, The Denial of Federal Benefits Office, U.S. Department of Justice, telephone (202) 616-3507.

(End of clause)

252.204-7003 CONTROL OF GOVERNMENT PERSONNEL WORK PRODUCT (APR 1992)

The Contractor's procedures for protecting against unauthorized disclosure of information shall not require Department of Defense employees or members of the Armed Forces to relinquish control of their work products, whether classified or not, to the contractor.

(End of clause)

252.204-7004 REQUIRED CENTRAL CONTRACTOR REGISTRATION ALTERNATE A (NOV 2003)

(a) Definitions. As used in this clause--

“Central Contractor Registration (CCR) database” means the primary Government repository for contractor information required for the conduct of business with the Government.

“Commercial and Government Entity (CAGE) code” means--

(1) A code assigned by the Defense Logistics Information Service (DLIS) to identify a commercial or Government entity; or

(2) A code assigned by a member of the North Atlantic Treaty Organization that DLIS records and maintains in the CAGE master file. This type of code is known as an “NCAGE code.”

“Data Universal Numbering System (DUNS) number” means the 9-digit number assigned by Dun and Bradstreet, Inc. (D&B) to identify unique business entities.

“Data Universal Numbering System +4 (DUNS+4) number” means the DUNS number assigned by D&B plus a 4-character suffix that may be assigned by a business concern. (D&B has no affiliation with this 4-character suffix.) This 4-character suffix may be assigned at the discretion of the business concern to establish additional CCR records for identifying alternative Electronic Funds Transfer (EFT) accounts (see Subpart 32.11 of the Federal Acquisition Regulation) for the same parent concern.

“Registered in the CCR database” means that--

(1) The Contractor has entered all mandatory information, including the DUNS number or the DUNS+4 number, into the CCR database;

(2) The Contractor's CAGE code is in the CCR database; and

(3) The Government has validated all mandatory data fields and has marked the records “Active.”

(End of clause)

252.205-7000 PROVISION OF INFORMATION TO COOPERATIVE AGREEMENT HOLDERS (DEC 1991)

(a) Definition.

"Cooperative agreement holder" means a State or local government; a private, nonprofit organization; a tribal organization (as defined in section 4(c) of the Indian Self-Determination and Education Assistance Act (Pub. L. 93-268; 25 U.S.C. 450 (c))); or an economic enterprise (as defined in section 3(e) of the Indian Financing Act of 1974 (Pub. L. 93-362; 25 U.S.C. 1452(e))) whether such economic enterprise is organized for profit or nonprofit

purposes; which has an agreement with the Defense Logistics Agency to furnish procurement technical assistance to business entities.

(b) The Contractor shall provide cooperative agreement holders, upon their request, with a list of those appropriate employees or offices responsible for entering into subcontracts under defense contracts. The list shall include the business address, telephone number, and area of responsibility of each employee or office.

(c) The Contractor need not provide the listing to a particular cooperative agreement holder more frequently than once a year.

(End of clause)

252.209-7000 ACQUISITION FROM SUBCONTRACTORS SUBJECT TO ONSITE INSPECTION UNDER THE INTERMEDIATE-RANGE NUCLEAR FORCES (INF) TREATY (NOV 1995)

(a) The Contractor shall not deny consideration for a subcontract award under this contract to a potential subcontractor subject to on-site inspection under the INF Treaty, or a similar treaty, solely or in part because of the actual or potential presence of Soviet inspectors at the subcontractor's facility, unless the decision is approved by the Contracting Officer.

(b) The Contractor shall incorporate this clause, including this paragraph (b), in all solicitations and contracts exceeding the simplified acquisition threshold in part 13 of the Federal Acquisition Regulation, except those for commercial items.

(End of clause)

252.209-7001 DISCLOSURE OF OWNERSHIP OR CONTROL BY THE GOVERNMENT OF A TERRORIST COUNTRY (SEP 2004)

(a) "Definitions."

As used in this provision --

(a) "Government of a terrorist country" includes the state and the government of a terrorist country, as well as any political subdivision, agency, or instrumentality thereof.

(2) "Terrorist country" means a country determined by the Secretary of State, under section 6(j)(1)(A) of the Export Administration Act of 1979 (50 U.S.C. App. 2405(j)(i)(A)), to be a country the government of which has repeatedly provided support for such acts of international terrorism. As of the date of this provision, terrorist countries subject to this provision include: Cuba, Iran, Libya, North Korea, Sudan, and Syria.

(3) "Significant interest" means --

(i) Ownership of or beneficial interest in 5 percent or more of the firm's or subsidiary's securities. Beneficial interest includes holding 5 percent or more of any class of the firm's securities in "nominee shares," "street names," or some other method of holding securities that does not disclose the beneficial owner;

(ii) Holding a management position in the firm, such as a director or officer;

(iii) Ability to control or influence the election, appointment, or tenure of directors or officers in the firm;

(iv) Ownership of 10 percent or more of the assets of a firm such as equipment, buildings, real estate, or other tangible assets of the firm; or

(v) Holding 50 percent or more of the indebtness of a firm.

(b) "Prohibition on award."

In accordance with 10 U.S.C. 2327, no contract may be awarded to a firm or a subsidiary of a firm if the government of a terrorist country has a significant interest in the firm or subsidiary or, in the case of a subsidiary, the firm that owns the subsidiary, unless a waiver is granted by the Secretary of Defense.

(c) "Disclosure."

If the government of a terrorist country has a significant interest in the Offeror or a subsidiary of the Offeror, the Offeror shall disclosure such interest in an attachment to its offer. If the Offeror is a subsidiary, it shall also disclose any significant interest the government of a terrorist country has in any firm that owns or controls the subsidiary. The disclosure shall include --

(1) Identification of each government holding a significant interest; and

(2) A description of the significant interest held by each government.

(End of provision)

252.209-7004 SUBCONTRACTING WITH FIRMS THAT ARE OWNED OR CONTROLLED BY THE GOVERNMENT OF A TERRORIST COUNTRY (MAR 1998)

(a) Unless the Government determines that there is a compelling reason to do so, the Contractor shall not enter into any subcontract in excess of $25,000 with a firm, or subsidiary of a firm, that is identified, on the List of Parties Excluded from Federal Procurement and Nonprocurement Programs, as being ineligible for the award of Defense contracts or subcontracts because it is owned or controlled by the government of a terrorist country.

(b) A corporate officer or a designee of the Contractor shall notify the Contracting Officer, in writing, before entering into a subcontract with a party that is identified, on the List of Parties Excluded from Federal Procurement and Nonprocurement Programs, as being ineligible for the award of Defense contracts or subcontracts because it is owned or controlled by the government of a terrorist country. The notice must include the name of the proposed subcontractor notwithstanding its inclusion on the List of Parties Excluded From Federal Procurement and Nonprocurement Programs.

(End of clause)

252.219-7009 SECTION 8(A) DIRECT AWARD (MAR 2002)

(a) This contract is issued as a direct award between the contracting office and the 8(a) Contractor pursuant to the Partnership Agreement dated February 1, 2002, between the Small Business Administration (SBA) and the Department of Defense. Accordingly, the SBA, even if not identified in Section A of this contract, is the prime contractor and retains responsibility for 8(a) certification, for 8(a) eligibility determinations and related issues, and for providing counseling and assistance to the 8(a) Contractor under the 8(a) Program. The cognizant SBA district office is:

(To be completed by the Contracting Officer at the time of award)

(b) The contracting office is responsible for administering the contract and for taking any action on behalf of the Government under the terms and conditions of the contract; provided that the contracting office shall give advance notice to the SBA before it issues a final notice terminating performance, either in whole or in part, under the contract. The contracting office also shall coordinate with the SBA prior to processing any novation agreement. The contracting office may assign contract administration functions to a contract administration office.

(c) The Contractor agrees that--

(1) It will notify the Contracting Officer, simultaneous with its notification to the SBA (as required by SBA's 8(a) regulations at 13 CFR 124.308), when the owner or owners upon whom 8(a) eligibility is based plan to relinquish ownership or control of the concern. Consistent with Section 407 of Pub. L. 100-656, transfer of ownership or control shall result in termination of the contract for convenience, unless the SBA waives the requirement for termination prior to the actual relinquishing of ownership and control; and

(2) It will not subcontract the performance of any of the requirements of this contract without the prior written approval of the SBA and the Contracting Officer.

(End of Clause)

252.223-7001 HAZARD WARNING LABELS (DEC 1991)

(a) "Hazardous material," as used in this clause, is defined in the Hazardous Material Identification and Material Safety Data clause of this contract.

(b) The Contractor shall label the item package (unit container) of any hazardous material to be delivered under this contract in accordance with the Hazard Communication Standard (29 CFR 1910.1200 et seq). The Standard requires that the hazard warning label conform to the requirements of the standard unless the material is otherwise subject to the labeling requirements of one of the following statutes:

(1) Federal Insecticide, Fungicide and Rodenticide Act;

(2) Federal Food, Drug and Cosmetics Act;

(3) Consumer Product Safety Act;

(4) Federal Hazardous Substances Act; or

(5) Federal Alcohol Administration Act.

(c) The Offeror shall list which hazardous material listed in the Hazardous Material Identification and Material Safety Data clause of this contract will be labeled in accordance with one of the Acts in paragraphs (b)(1) through (5) of this clause instead of the Hazard Communication Standard. Any hazardous material not listed will be interpreted to mean that a label is required in accordance with the Hazard Communication Standard.

MATERIAL (If None, Insert "None.")	ACT
_____	_____
_____	_____

(d) The apparently successful Offeror agrees to submit, before award, a copy of the hazard warning label for all hazardous materials not listed in paragraph (c) of this clause. The Offeror shall submit the label with the Material Safety Data Sheet being furnished under the Hazardous Material Identification and Material Safety Data clause of this contract.

(e) The Contractor shall also comply with MIL-STD-129, Marking for Shipment and Storage (including revisions adopted during the term of this contract).

(End of clause)

252.223-7004 DRUG-FREE WORK FORCE (SEP 1988)

(a) Definitions.

(1) "Employee in a sensitive position," as used in this clause, means an employee who has been granted access to classified information; or employees in other positions that the Contractor determines involve national security; health or safety, or functions other than the foregoing requiring a high degree of trust and confidence.

(2) "Illegal drugs," as used in this clause, means controlled substances included in Schedules I and II, as defined by section 802(6) of title 21 of the United States Code, the possession of which is unlawful under chapter 13 of that Title. The term "illegal drugs" does not mean the use of a controlled substance pursuant to a valid prescription or other uses authorized by law.

(b) The Contractor agrees to institute and maintain a program for achieving the objective of a drug-free work force. While this clause defines criteria for such a program, contractors are encouraged to implement alternative approaches comparable to the criteria in paragraph (c) that are designed to achieve the objectives of this clause.

(c) Contractor programs shall include the following, or appropriate alternatives:

(1) Employee assistance programs emphasizing high level direction, education, counseling, rehabilitation, and coordination with available community resources;

(2) Supervisory training to assist in identifying and addressing illegal drug use by Contractor employees;

(3) Provision for self-referrals as well as supervisory referrals to treatment with maximum respect for individual confidentiality consistent with safety and security issues;

(4) Provision for identifying illegal drug users, including testing on a controlled and carefully monitored basis. Employee drug testing programs shall be established taking account of the following:

(i) The Contractor shall establish a program that provides for testing for the use of illegal drugs by employees in sensitive positions. The extent of and criteria for such testing shall be determined by the Contractor based on considerations that include the nature of the work being performed under the contract, the employee's duties, and efficient use of Contractor resources, and the risks to health, safety, or national security that could result from the failure of an employee adequately to discharge his or her position.

(ii) In addition, the Contractor may establish a program for employee drug testing--

(A) When there is a reasonable suspicion that an employee uses illegal drugs; or

(B) When an employees has been involved in an accident or unsafe practice;

(C) As part of or as a follow-up to counseling or rehabilitation for illegal drug use;

(D) As part of a voluntary employee drug testing program.

(iii) The Contractor may establish a program to test applicants for employment for illegal drug use.

(iv) For the purpose of administering this clause, testing for illegal drugs may be limited to those substances for which testing is prescribed by section 2..1 of subpart B of the "Mandatory Guidelines for Federal Workplace Drug Testing Programs" (53 FR 11980 (April 11, 1988), issued by the Department of Health and Human Services.

(d) Contractors shall adopt appropriate personnel procedures to deal with employees who are found to be using drugs illegally. Contractors shall not allow any employee to remain on duty or perform in a sensitive position who is found to use illegal drugs until such times as the Contractor, in accordance with procedures established by the Contractor, determines that the employee may perform in such a position.

(e) The provisions of this clause pertaining to drug testing program shall not apply to the extent that are inconsistent with state or local law, or with an existing collective bargaining agreement; provided that with respect to the latter, the Contractor agrees those issues that are in conflict will be a subject of negotiation at the next collective bargaining session.

(End of clause)

252.223-7006 PROHIBITION ON STORAGE AND DISPOSAL OF TOXIC AND HAZARDOUS MATERIALS (APR 1993)

(a) "Definitions".

As used in this clause --

(1) "Storage" means a non-transitory, semi-permanent or permanent holding, placement, or leaving of material. It does not include a temporary accumulation of a limited quantity of a material used in or a waste generated or resulting from authorized activities, such as servicing, maintenance, or repair of Department of Defense (DoD) items, equipment, or facilities.

(2) "Toxic or hazardous materials" means:

(i) Materials referred to in section 101(14) of the Comprehensive Environmental Response, Compensation, and Liability Act (CERCLA) of 1980 (42 U.S.C. 9601(14)) and materials designated under section 102 of CERCLA (42 U.S.C. 9602) (40 CFR part 302);

(ii) Materials that are of an explosive, flammable, or pyrotechnic nature; or

(iii) Materials otherwise identified by the Secretary of Defense as specified in DoD regulations.

(b) In accordance with 10 U.S.C. 2692, the Contractor is prohibited from storing or disposing of non-DoD-owned toxic or hazardous materials on a DoD installation, except to the extent authorized by a statutory exception to 10 U.S.C. 2692 or as authorized by the Secretary of Defense or his designee.

(End of clause)

252.225-7012 PREFERENCE FOR CERTAIN DOMESTIC COMMODITIES (JUN 2004)

(a) Definitions. As used in this clause--

(1) Component means any item supplied to the Government as part of an end product or of another component.

(2) End product means supplies delivered under a line item of this contract.

(3) United States means the 50 States, the District of Columbia, and outlying areas.

(4) U.S.-flag vessel means a vessel of the United States or belonging to the United States, including any vessel registered or having national status under the laws of the United States.

(b) The Contractor shall deliver under this contract only such of the following items, either as end products or components, that have been grown, reprocessed, reused, or produced in the United States:

(1) Food.

(2) Clothing.

(3) Tents, tarpaulins, or covers.

(4) Cotton and other natural fiber products.

(5) Woven silk or woven silk blends.

(6) Spun silk yarn for cartridge cloth.

(7) Synthetic fabric, and coated synthetic fabric, including all textile fibers and yarns that are for use in such fabrics.

(8) Canvas products.

(9) Wool (whether in the form of fiber or yarn or contained in fabrics, materials, or manufactured articles).

(10) Any item of individual equipment (Federal Supply Class 8465) manufactured from or containing fibers, yarns, fabrics, or materials listed in this paragraph (b).

(c) This clause does not apply--

(1) To items listed in section 25.104(a) of the Federal Acquisition Regulation (FAR), or other items for which the Government has determined that a satisfactory quality and sufficient quantity cannot be acquired as and when needed at U.S. market prices;

(2) To end products incidentally incorporating cotton, other natural fibers, or wool, for which the estimated value of the cotton, other natural fibers, or wool--

(i) Is not more than 10 percent of the total price of the end product; and (ii) Does not exceed the simplified acquisition threshold in FAR part 2;

(3) To waste and byproducts of cotton or wool fiber for use in the production of propellants and explosives;

(4) To foods, other than fish, shellfish, or seafood, that have been manufactured or processed in the United States, regardless of where the foods (and any component if applicable) were grown or produced. Fish, shellfish, or seafood manufactured or processed in the United States and fish, shellfish, or seafood contained in foods manufactured or processed in the United States shall be provided in accordance with paragraph (d) of this clause;

(5) To chemical warfare protective clothing produced in the countries listed in subsection 225.872-1 of the Defense FAR Supplement; or

(6) To fibers and yarns that are for use in synthetic fabric or coated synthetic fabric (but does apply to the synthetic or coated synthetic fabric itself), if--

(i) The fabric is to be used as a component of an end product that is not a textile product. Examples of textile products, made in whole or in part of fabric, include--

(A) Draperies, floor coverings, furnishings, and bedding (Federal Supply Group 72, Household and Commercial Furnishings and Appliances);

(B) Items made in whole or in part of fabric in Federal Supply Group 83, Textile/leather/furs/apparel/findings/ tents/flags, or Federal Supply Group 84, Clothing, Individual Equipment and Insignia;

(C) Upholstered seats (whether for household, office, or other use); and

(D) Parachutes (Federal Supply Class 1670); or

(ii) The fibers and yarns are para-aramid fibers and yarns manufactured in the Netherlands.

(d)(1) Fish, shellfish, and seafood delivered under this contract, or contained in foods delivered under this contract--

(i) Shall be taken from the sea by U.S.-flag vessels; or

(ii) If not taken from the sea, shall be obtained from fishing within the United States; and

(2) Any processing or manufacturing of the fish, shellfish, or seafood shall be performed on a U.S.-flag vessel or in the United States.

(End of clause)

252.225-7031 SECONDARY ARAB BOYCOTT OF ISRAEL (APR 2003)

(a) Definitions. As used in this provision--

(1) Foreign person means any person (including any individual, partnership, corporation, or other form of association) other than a United States person.

(2) United States person is defined in 50 U.S.C. App. 2415(2) and means--

(i) Any United States resident or national (other than an individual resident outside the United States who is employed by other than a United States person);

(ii) Any domestic concern (including any permanent domestic establishment of any foreign concern); and

(iii) Any foreign subsidiary or affiliate (including any permanent foreign establishment) of any domestic concern that is controlled in fact by such domestic concern.

(b) Certification. If the offeror is a foreign person, the offeror certifies, by submission of an offer, that it--

(1) Does not comply with the Secondary Arab Boycott of Israel; and

(2) Is not taking or knowingly agreeing to take any action, with respect to the Secondary Boycott of Israel by Arab countries, which 50 U.S.C. App. 2407(a) prohibits a United States person from taking.

(End of provision)

252.227-7033 RIGHTS IN SHOP DRAWINGS (APR 1966)

(a) Shop drawings for construction means drawings, submitted to the Government by the Construction Contractor, subcontractor or any lower-tier subcontractor pursuant to a construction contract, showing in detail (i) the proposed fabrication and assembly of structural elements and (ii) the installation (i.e., form, fit, and attachment details) of materials or equipment. The Government may duplicate, use, and disclose in any manner and for any purpose shop drawings delivered under this contract.

(b) This clause, including this paragraph (b), shall be included in all subcontracts hereunder at any tier.

252.231-7000 SUPPLEMENTAL COST PRINCIPLES (DEC 1991)

When the allowability of costs under this contract is determined in accordance with part 31 of the Federal Acquisition Regulation (FAR), allowability shall also be determined in accordance with part 231 of the Defense FAR Supplement, in effect on the date of this contract.

(End of clause)

252.236-7000 MODIFICATION PROPOSALS - PRICE BREAKDOWN. (DEC 1991)

(a) The Contractor shall furnish a price breakdown, itemized as required and within the time specified by the Contracting Officer, with any proposal for a contract modification.

(b) The price breakdown --

(1) Must include sufficient detail to permit an analysis of profit, and of all costs for --

(i) Material;

(ii) Labor;

(iii) Equipment;

(iv) Subcontracts; and

(v) Overhead; and

(2) Must cover all work involved in the modification, whether the work was deleted, added, or changed.

(c) The Contractor shall provide similar price breakdowns to support any amounts claimed for subcontracts.

(d) The Contractor's proposal shall include a justification for any time extension proposed.

252.236-7001 CONTRACT DRAWINGS, MAPS, AND SPECIFICATIONS (AUG 2000)

(a) The Government will provide to the Contractor, without charge, one set of contract drawings and specifications, except publications incorporated into the technical provisions by reference, in electronic or paper media as chosen by the Contracting Officer.

(b) The Contractor shall--

(1) Check all drawings furnished immediately upon receipt;

(2) Compare all drawings and verify the figures before laying out the work;

(3) Promptly notify the Contracting Officer of any discrepancies;

(4) Be responsible for any errors that might have been avoided by complying with this paragraph (b); and

(5) Reproduce and print contract drawings and specifications as needed.

(c) In general--

(1) Large-scale drawings shall govern small-scale drawings; and

(2) The Contractor shall follow figures marked on drawings in preference to scale measurements.

(d) Omissions from the drawings or specifications or the misdescription of details of work that are manifestly necessary to carry out the intent of the drawings and specifications, or that are customarily performed, shall not relieve the Contractor from performing such omitted or misdescribed details of the work. The Contractor shall perform such details as if fully and correctly set forth and described in the drawings and specifications.

(e) The work shall conform to the specifications and the contract drawings identified on the following index of drawings:

ITEM NO. R-48.88 A.C. (PARCEL NO. 2)

RELIEF WELLS, NASH, MISSOURI

LITTLE RIVER DRAINAGE DISTRICT

MISSISSIPPI RIVER LEVEES - CONSTRUCTION

FILE NOS. 001a0680 – 017a0680

INDEX TO DRAWINGS

TITLE	DRAWING NUMBER
MAPS AND INDEX	1
RIGHT OF WAY PLAN	2
PLAN VIEW	3
PROFILE – DITCHES “A”, “B”, “C”, “D”, & DITCH 8	4
CROSS SECTIONS – DITCH “A”	5
CROSS SECTIONS – DITCH “B”	6
CROSS SECTIONS – DITCH “C”	7
CROSS SECTIONS – DITCH “D”	8
CROSS SECTIONS – DITCH 8	9

CROSS SECTIONS – DITCH 8	10
RELIEF WELL AND PIEZOMETER DETAILS	11
CULVERT DETAILS	12
LATERAL DITCH RIPRAP PROTECTION DETAILS	13
STAGE HYDROGRAPHS – CAPE GIRARDEAU GAGE	14
BORING LOGS	15
STANDARD BORING LEGEND	16
TEMPORARY EROSION CONTROL DEVICE	17

(End of clause)

252.236-7002 OBSTRUCTION OF NAVIGABLE WATERWAYS. (DEC 1991)

(a) The Contractor shall --

(1) Promptly recover and remove any material, plant, machinery, or appliance which the contractor loses, dumps, throws overboard, sinks, or misplaces, and which, in the opinion of the Contracting Officer, may be dangerous to or obstruct navigation;

(2) Give immediate notice, with description and locations of any such obstructions, to the Contracting Officer; and

(3) When required by the Contracting Officer, mark or buoy such obstructions until the same are removed.

(b) The Contracting Officer may --

(1) Remove the obstructions by contract or otherwise should the Contractor refuse, neglect, or delay compliance with paragraph (a) of this clause; and

(2) Deduct the cost of removal from any monies due or to become due to the Contractor; or

(3) Recover the cost of removal under the Contractor's bond.

(c) The Contractor's liability for the removal of a vessel wrecked or sunk without fault or negligence is limited to that provided in sections 15, 19, and 20 of the River and Harbor Act of March 3, 1899 (33 U.S.C. 410 et. seq.).

252.236-7004 PAYMENT FOR MOBILIZATION AND DEMOBILIZATION (DEC 1991)

(a) The Government will pay all costs for the mobilization and demobilization of all of the Contractor's plant and equipment at the contract lump sum price for this item.

(1) 60% percent of the lump sum price upon completion of the contractor's mobilization at the work site.

(2) The remaining 40% percent upon completion of demobilization.

(b) The Contracting Officer may require the Contractor to furnish cost data to justify this portion of the bid if the Contracting Officer believes that the percentages in paragraphs (a) (1) and (2) of this clause do not bear a reasonable relation to the cost of the work in this contract.

(1) Failure to justify such price to the satisfaction of the Contracting Officer will result in payment, as determined by the Contracting Officer, of --

(i) Actual mobilization costs at completion of mobilization;

(ii) Actual demobilization costs at completion of demobilization; and

(iii) The remainder of this item in the final payment under this contract.

(2) The Contracting Officer's determination of the actual costs in paragraph (b)(1) of this clause is not subject to appeal.

252.242-7000 POSTAWARD CONFERENCE (DEC 1991)

The Contractor agrees to attend any postaward conference convened by the contracting activity or contract administration office in accordance with Federal Acquisition Regulation subpart 42.5.

(End of clause)

252.243-7001 PRICING OF CONTRACT MODIFICATIONS (DEC 1991)

When costs are a factor in any price adjustment under this contract, the contract cost principles and procedures in FAR part 31 and DFARS part 231, in effect on the date of this contract, apply.

252.243-7002 REQUESTS FOR EQUITABLE ADJUSTMENT (MAR 1998)

(a) The amount of any request for equitable adjustment to contract terms shall accurately reflect the contract adjustment for which the Contractor believes the Government is liable. The request shall include only costs for performing the change, and shall not include any costs that already have been reimbursed or that have been separately claimed. All indirect costs included in the request shall be properly allocable to the change in accordance with applicable acquisition regulations.

(b) In accordance with 10 U.S.C. 2410(a), any request for equitable adjustment to contract terms that exceeds the simplified acquisition threshold shall bear, at the time of submission, the following certificate executed by an individual authorized to certify the request on behalf of the Contractor:

I certify that the request is made in good faith, and that the supporting data are accurate and complete to the best of my knowledge and belief.

(Official's Name)

(Title)

(c) The certification in paragraph (b) of this clause requires full disclosure of all relevant facts, including--

(1) Cost or pricing data if required in accordance with subsection 15.403-4 of the Federal Acquisition Regulation (FAR); and

(2) Information other than cost or pricing data, in accordance with subsection 15.403-3 of the FAR, including actual cost data and data to support any estimated costs, even if cost or pricing data are not required.

(d) The certification requirement in paragraph (b) of this clause does not apply to----

(1) Requests for routine contract payments; for example, requests for payment for accepted supplies and services, routine vouchers under a cost-reimbursement type contract, or progress payment invoices; or

(2) Final adjustment under an incentive provision of the contract.

SECTION 00800 - SPECIAL CONTRACT REQUIREMENT

SP1. **EXCLUSION PERIODS IN COMPUTING COMPLETION SCHEDULES**. No work will be required during the period between 15 December and 31 May, inclusive. This period has not been considered in computing the time allowed for completion in accordance with FAR 52.211-10. The Contractor may, however, perform work during all or any part of the non-work period provided that he/she has received prior approval therefore, in writing, from the Contracting Officer. In the event that the Contractor's operations are suspended at the beginning of or during this period, the Contracting Officer reserves the right to direct the Contractor to restore the work area to at least the level of flood protection existing prior to the Contractor's operations in the area, in accordance with the procedures of paragraph SP30 as applicable, all at no additional cost to the Government.

SP2 **LIQUIDATED DAMAGES-CONSTRUCTION**. The Contractor's obligation specified in paragraph 3.9 of SECTION 02936, ESTABLISHMENT OF TURF, is exempt from liquidated damages.

SP3. **RIGHT-OF-WAY**

a. The rights-of-way and easements for the work to be constructed under this contract within the limits indicated on the drawings will be provided by the Government without cost to the Contractor. However, the Contractor shall make his own arrangements with the appropriate owners or organizations for transporting his equipment across, over or under railroad tracks, highways, bridges, private property, and utility lines and shall provide at his own expense any additional right-of-way or easements required to effect such crossings, including insurance requirements of owners. Limits of right-of-way which will be provided by the Government are as indicated on the drawings.

b. The Contractor shall, upon reasonable notice, without expense to the Government and at any time during the progress of the work when not being actively used for contract operations, promptly vacate and clean up any part of the Government grounds that have been allotted to or have been in use by him when directed to do so by the Contracting Officer.

c. The Contractor shall not obstruct any existing roads on the lands controlled by the United States except with the permission of the Contracting Officer, and shall maintain such roads in as good condition as exists at the time of commencement of the work.

d. Any additional right-of-way required for access must be obtained by and at the expense of the Contractor. The Contractor shall submit written evidence to the Contracting Officer that he has obtained the rights-of-way from the property owners. The written evidence shall consist of an authenticated copy of the conveyance under which the Contractor acquired the rights-of-way, prepared and executed in accordance with the laws of the State of Missouri. If temporary rights are obtained by the Contractor, the period of time shall coincide with (FAR 52.211-10) , "Commencement, Prosecution, and Completion of Work" of the Section 00700 Contract Clauses, plus a reasonable time for any extension granted for completion of the work. The Contractor shall be solely responsible for any and all damages, claims for damages, and liability of any nature whatsoever arising from or growing out of the use of rights-of-way other than those rights-of-way furnished by the Government.

e. The Contractor shall repair, at his own expense, any and all damage to the existing roads when such damage is a result of his operations on this contract. The Contractor shall also replace, at his own expense, any and all surfacing displaced or damaged by his operations on this contract. The repairs and/or replacement shall be done to the satisfaction of the Contracting Officer.

f. All Right of Way and well locations shall be staked prior to commencement of construction. All Right of Way markers shall remain in place throughout the life of the project and shall be removed prior to final acceptance, as directed by the Contracting Officer.

g. All surveying including but not limited to pilot hole locations, relief well locations and the rights-of-way shall be accomplished by a registered land surveyor licensed in the state of Missouri.

SP4. **LAYOUT OF WORK**.

A. The Government will establish the following baselines and bench marks at the site of the work:

(1) Baselines as shown on the drawings.

(2) Bench marks as shown on the drawings.

b. From the baselines and bench marks established, the Contractor shall complete the layout of the work and shall be responsible for all measurements that may be required for the execution of the work to the location and limit marks prescribed in the specifications or on the contract drawings, subject to such modifications as the Contracting Officer may require to meet changed conditions or as a result of necessary modifications to the contract work.

c. The Contractor shall furnish, at his own expense, such stakes, templates, platforms, equipment, tools and materials, and all labor as may be required in laying out any part of the work from the baselines and bench marks. It shall be the responsibility of the Contractor to maintain and preserve all stakes and marks established by the Contracting Officer until authorized to remove them, and if such marks are destroyed, by the Contractor or through his negligence, prior to their authorized removal, they may be replaced by the Contracting Officer, at his discretion, and the expense of replacement will be deducted from any amounts due or to become due the Contractor. The Contracting Officer may require that work be suspended at any time when location and limit marks established by the Contractor are not reasonably adequate to permit checking of the work.

SP5. **PROGRESS CHART**. The schedule of work will be in accordance with the progress chart. The progress chart required by provisions of paragraph (a) of the CONTRACT CLAUSE entitled "Schedules for Construction Contracts" shall be prepared on ENG Form 2454, copies of which will be furnished to the Contractor by the Government. THREE COPIES OF THE SCHEDULE WILL BE REQUIRED.

SP6. SAFETY-RELATED SPECIAL REQUIREMENT. **ALL WORK UNDER THIS CONTRACT SHALL COMPLY WITH THE LATEST VERSION OF U.S. ARMY CORPS OF ENGINEERS SAFETY AND HEALTH REQUIREMENTS MANUAL, EM 385-1-1, AND OCCUPATIONAL SAFETY AND HEALTH ACT (OSHA) STANDARDS IN EFFECT ON THE DATE OF THE SOLICITATION. NO SEPARATE PAYMENT WILL BE MADE FOR COMPLIANCE WITH EM 385-1-1, NOR FOR COMPLIANCE WITH ANY OF THE OTHER SAFETY-RELATED SPECIAL REQUIREMENTS**.

A. Accident Investigations and Reporting. Refer to EM 385-1-1, Section 1. Accidents shall be investigated and reports completed by the immediate supervisor of the employee(s) involved and reported to the Contracting Officer or his representative immediately after the accident occurs. A report of all mishaps occurring on the project shall be submitted to the Contracting Officer on ENG Form 3394 within two working days following the incident. All data reported must be complete, timely and accurate. A follow-up report shall be submitted when the estimated lost time days differ from actual lost time days. When a job related injury occurs which requires medical treatment, a supervisor of the injured employee shall accompany the injured employee to the treatment facility and explain the employee's regular duties and the availability of "Light Duty" so the injured employee can return to work as soon as possible.

b. Accident Prevention Program. Refer to the CONTRACT CLAUSE entitled, "Accident Prevention (Alternate I)". Within 15 calendar days after receipt of Notice of Award of the contract, four copies of the Accident Prevention Program shall be submitted to the Contracting Officer for review and approval. The program shall be prepared in the following format:

(1) An executed LMV Form 358R, Administrative Plan (available upon request).
(2) An executed LMV Form 359R, Activity Hazard Analysis (available upon request).
(3) A copy of company policy statement regarding accident prevention.
(4) When marine plant and equipment are in use under a contract, the method of fuel oil transfer shall be submitted on LMV Form 414R, Fuel Oil Transfer, (available upon request). (Refer to 33 CFR 156.)

The Contractor shall not commence physical work at the site until the program has been approved by the Contracting Officer, or his authorized representative. At the Contracting Officer's discretion, the Contractor may submit his Activity Hazard Analysis for only the first phase of construction provided that it is accompanied by an outline of the remaining phases of construction. All remaining phases shall be submitted and accepted prior to the beginning of work in each phase. Also refer to Section 1 of EM 385-1-1.

c. Daily Inspections. The Contractor shall perform daily safety inspections and record them on the forms approved by the Contracting Officer. Reports of daily inspections shall be maintained at the jobsite. The reports shall be records of the daily inspections and resulting actions. Each report will include, as a minimum, the following:

(1) Phase(s) of construction underway during the inspection.

(2) Locations or areas inspections were made.

(3) Results of inspection, including nature of deficiencies observed and corrective actions taken, or to be taken, date, and signature of the person responsible for its contents.

d. Machinery and Mechanized Equipment. Machinery and mechanized equipment used under this contract shall comply with the following:

(1) When mechanized equipment is operated on floating plant, the Contractor shall provide positive and acceptable means of preventing this equipment from moving or falling into the water. The type of equipment addressed by this clause includes front-end loaders, bulldozers, trucks (both on- and off-road), backhoes, track hoes, and similar equipment. If the Contractor plans to use such equipment on floating plant, an activity hazard analysis must be developed for this feature of work. The plan must include a detailed explanation of the type or types of physical barriers, curbs, structures, etc., which will be incorporated to protect the operator and prevent the equipment from entering the water. Nonstructural warning devices may be considered for situations where the use if structural barriers is determined to be impracticable. The activity hazard analysis must thoroughly address the procedure and be submitted to the Corps for review and acceptance prior to start of this feature of work.

(2) The stability of crawler, truck, and wheel-mounted cranes shall be assured.

(a) The manufacturer's load-rating chart may be used to determine the maximum allowable working load for each particular crane's boom angle provided a test load, with a boom angle of 20 degrees, confirms the manufacturer's load-rating table.

(b) Stability tests are required if:

(i) There is no manufacturer's load-rating chart securely fixed to the operator's cab;

(ii) There has been a change in the boom or other structural members; or

(iii) There has been a change in the counterweight.

The test shall consist of lifting a load with the boom in the least stable undercarriage position and at an angle of 20 degrees above the horizontal. The test shall be conducted under close supervision on a firm, level surface. The load that tilts the machine shall be identified as the test load. The test load moment (in ft-lbs.) shall then be

calculated by multiplying the horizontal distance (in ft) from the center of rotation of the machine to the test load, times the test load (in lbs.). Three-fourths of this test-load moment shall then be used to compute the maximum allowable operating loads for the boom at 20, 40, 60, and 80 degrees above horizontal. From these maximum allowable operating loads, a curve shall be plotted and posted in the cab of the machine in sight of the operator. These values shall not be exceeded except in the performance test described below. The test load shall never exceed 110 percent of the manufacturer's maximum rated capacity.

(c) In lieu of the test and computations above, the crane may be load tested for stability at each of the four boom positions listed above.

(3) Performance tests shall be performed in accordance with Section 16 of EM 385-1-1. Performance tests shall be conducted after each stability test, when the crane is placed in service on a project, and at least every 12 months.

(4) Inspections shall be made which will ensure a safe and economical operation of both cranes and draglines. Specific inspections and their frequencies are listed on the appropriate checklists noted below. Results of inspections and tests for cranes shall be recorded on the Safety Inspection Check List, LMV Form 326R (available upon request), and inspection results for draglines shall be recorded on LMV Form 373R (available upon request). Copies of the inspections and tests shall be available at the jobsite for review. All stability and performance tests on cranes and all complete dragline inspections shall be witnessed by the Contracting Officer or his authorized representative.

(5) A complete dragline inspection shall be made:

(a) At least annually;

(b) Prior to the dragline being placed in operation; and

(c) After the dragline has been out of service for more than six months.

e. Safety Sign. The Contractor shall furnish, erect, and maintain a safety sign at the site, as located by the Contracting Officer. The sign shall conform to the requirements of this paragraph and the drawing entitled "Safety Sign", included at the end of these Special Contract Requirements. The lettering shall be black and the background white. When placed on floating plant, the sign may be half size. Upon request, the Government will furnish a decal of the Engineer Castle. The sign shall be erected as soon as practicable, but not later than 15 calendar days after the date established for commencement of work. The data required shall be current.

SP7. CERTIFICATES OF COMPLIANCE . Any certificates required for demonstrating proof of compliance of material with specification requirements shall be executed in four (4) copies. Each certificate shall be signed by an official authorized to certify on behalf of the manufacturing company and shall contain the name and address of the Contractor, the project name and location, and the quantity and date or dates of shipment or delivery to which the certificates apply. Copies of laboratory test reports submitted with certificates shall contain the name and address of the testing laboratory and the date or dates of the test to which the report applies. Certification shall not be construed as relieving the Contractor from furnishing satisfactory material, if, after tests are performed on selected samples, the material is found not to meet the specific requirements.

SP8. CONTRACTOR'S CERTIFICATE . Each submittal of shop drawings and materials data shall be accompanied by a certificate, signed by the head of the Quality Control Organization of the prime Contractor, that the prime Contractor has reviewed in detail all shop drawings and materials contained in the submittal and that they are correct and in strict conformance with the contract drawings and specifications except as may be otherwise explicitly stated. The Government will first check for the Contractor's certificate and then review and render approval action or indicate disapproval in those cases where contract requirements are not fulfilled.

SP 9. AS-BUILT . The Contractor shall maintain three (3) full-size sets of the Contract drawings depicting a current record of the work as actually constructed. One set is for the Contractor's use and two for the Government's use. These working as-built drawing red-line mark-ups may be manually or electronically generated using the construction plans. These working as-built drawings shall be reviewed at least monthly with the Contracting Officer, prior to the Contractor submitting a request for progress payment. Both the Contracting Officer and the Contractor shall certify that the as-built drawings are accurate and up-to-date before progress payment is made. Upon completion of the work and not later than 60 days from acceptance, the Contractor shall deliver two (2) complete final sets of the as-built red-line marked-up plans depicting the construction as actually accomplished. The final as-built drawings shall be identified as such by marking or stamping them with the words "AS-BUILT DRAWINGS" in letters at least 3/16" high. Those drawings where no change is involved shall be marked or stamped "AS-BUILT, NO CHANGE". Compliance and delivery of the final as-built drawings will be enforced through the approval of final payment. Also, the quality of the final as-built drawings will be reflected in the Contractor's performance evaluation.

SP10. DAMAGE TO WORK. The responsibility for damage to any part of the permanent work shall be as set forth in the CONTRACT CLAUSE entitled "Permits and Responsibilities". However, if, in the judgement of the Contracting Officer, any part of the permanent work performed by the Contractor is damaged by flood, tornado, or earthquake, which damage is not due to the failure of the Contractor to take reasonable precautions or to exercise sound engineering and construction practices in the conduct of the work, the Contractor shall make the repairs as ordered by the Contracting Officer and full compensation for such repairs will be made at the applicable contract unit or lump sum prices as fixed and established in the contract. If, in the opinion of the Contracting Officer, there are no contract unit or lump sum prices applicable to any part of such work, an equitable adjustment pursuant to the CONTRACT CLAUSE entitled "Changes" will be made as full compensation for the repairs of that part of the permanent work for which there are no applicable contract unit or lump sum prices. Except as herein provided, damage to all work (including temporary construction), utilities, materials, equipment and plant shall be repaired to the satisfaction of the Contracting Officer at the Contractor's expense regardless of the cause of such damage.

SP11. **NOTIFICATION OF AREA ENGINEER BEFORE BEGINNING WORK** . At least seven days before beginning work, the Contractor shall notify Mr. Stephen P. Shankle, Area Engineer, Caruthersville Area Office, 706 Truman, Caruthersville, Missouri 63830, Telephone No. 901-544-3075 or 573-333-1043).

COLLECT CALLS WILL NOT BE ACCEPTED.

SP12. **RETESTING OF CONSTRUCTION MATERIALS**. Unless otherwise specified, where the Technical Specifications state that tests will be performed at the expense of the Government, the cost of only the initial test will be borne by the Government. Any retesting due to failure of the materials to meet the requirements in the initial test or any retesting requested by the Contractor shall be performed at the Contractor's expense. The retests shall be at laboratories approved by the Contracting Officer. The costs of retests made at Government laboratories will be deducted from the total amount due the Contractor.

SP13. **VEHICLE WEIGHT LIMITATIONS** . Vehicle weight limitations for operation on roads, streets, and bridges may affect the prosecution of work under this contract. The Contractor will be responsible for obtaining all necessary licenses and permits in accordance with the CONTRACT CLAUSE entitled "Permits and Responsibilities".

SP14. **OBSTRUCTION**

a. Utilities. All utilities located at the site are to remain in place and operative during the construction. At least 10 days before beginning work in the vicinity of a utility, the Contractor shall call the appropriate "Call Before You Dig" number listed below. The Contractor shall exercise special care when working in the vicinity of utilities to prevent damage thereto or injury to the Contractor's employees or others. Any damage to the utilities or interruptions of service occasioned by the Contractor's operations shall be repaired and the service restored promptly at his expense.

In the event the Contractor elects to have utilities relocated for his own convenience, he shall make his own arrangement with utility owners for the rerouting and replacement to their permanent location after completion of the work adjacent thereto. All costs associated with utility relocation for the Contractor's convenience shall be at his expense.

CALL BEFORE YOU DIG NUMBER

MISSOURI - 1-800-344-7483 or (1-800-DIG-RITE)

b. Existing Fences and Cattle Guards. Existing fences and cattle guards within the work limits will be removed, if necessary, by others as the construction progresses. The Contractor shall notify Mr. Larry Dowdy, Little River Drainage District of Missouri, 1440 Kurre Lane, Cape Girardeau, Missouri, 63701, Telephone No. (573) 335-3439 at least 10 days prior to the date the removal of fences and cattle guards at each separate location will be required. The Contractor shall cooperate fully with the local officials with respect to the removal of fences and cattle guards. Any unwarrantable damage to the fences and cattle guards occasioned by the Contractor's operations shall be repaired at his expense.

c. Mile Posts and Staff Gages. The Contractor shall, when necessary to perform the work under this contract, remove all levee mileposts and staff gages encountered within the work limits. After completion of the work, the Contractor shall reinstall the levee mileposts and staff gages at their proper location and elevation. Survey notes and records attesting to the locations of the mileposts and staff gages shall be furnished to the Contracting Officer. The Contractor shall be responsible for any damage to mileposts and staff gages caused through his fault or negligence. No separate payment will be made for the removal and restoration of mileposts and staff gages, and all cost incurred by this clause shall be considered an incidental expense of the Contractor.

SP15. **NATIONAL POLLUTANT DISCHARGE ELIMINATION SYSTEM**. In compliance with the General Permit of the NPDES, the Contracting Officer will file a Notice of Intent (NOI) with the State of Mississippi. In addition, the Storm Water Pollution Prevention Plan (SWPPP) required by the General Permit has been prepared and is included at the end of these Special Contract Requirements. The Contractor shall adhere strictly to the erosion control provisions of SWPPP and Section 01130 - ENVIRONMENTAL PROTECTION to minimize sediment discharge into nearby water courses to the maximum extent practicable. Furthermore, the Contractor and all subcontractors shall sign the certification contained in the SWPPP. The Contractor shall maintain the SWPPP on the construction site at all times. The SWPPP shall take precedence over the technical specifications.

SP16. **TIME EXTENSIONS FOR UNUSUALLY SEVERE WEATHER (31 OCT 1989).**

a. This provision specifies the procedure for determination of time extensions for unusually severe weather in accordance with the CONTRACT CLAUSE entitled "Default (Fixed-Price Construction)". In order for the Contracting Officer to award a time extension under this clause, the following conditions must be satisfied:

(1). The weather experienced at the project site during the contract period must be found to be unusually severe, that is, more severe than the adverse weather anticipated for the project location during any given month.

(2). The unusually severe weather must actually cause a delay to the completion of the project. The delay must be beyond the control and without the fault or negligence of the Contractor.

B. The following schedule of monthly anticipated adverse weather delays is based on National Oceanic and Atmospheric Administration (NOAA) or similar data for the project location and will constitute the base line for monthly weather time evaluations. The Contractor's progress schedule must reflect these anticipated adverse weather delays in all weather dependent activities.

MONTHLY ANTICIPATED ADVERSE WEATHER DELAY
WORK DAYS BASED ON (6) DAY WORK WEEK

JAN	FEB	MAR	APR	MAY	JUN	JUL	AUG	SEP	OCT	NOV	DEC
(12)	(9)	(8)	(7)	(7)	(6)	(4)	(2)	(4)	(4)	(6)	(11)

c. Upon acknowledgment of the Notice to Proceed (NTP) and continuing throughout the contract, the Contractor will record on the daily CQC report, the occurrence of adverse weather and resultant impact to normally scheduled work. Actual adverse weather delay days must prevent work on critical activities for 50 percent or more of the Contractor's scheduled workday. The number of actual adverse weather delay days shall include days impacted by actual adverse weather (even if adverse weather occurred in previous month), be calculated chronologically from the first to the last day of each month, and be recorded as full days. If the number of actual adverse weather delay days exceeds the number of days anticipated in paragraph b, above, the Contracting Officer will convert any qualifying delays to calendar days, giving full consideration for equivalent fair weather work days, and issue a modification in accordance with the CONTRACT CLAUSE entitled "Default (Fixed-Price Construction)". (ER 415-1-15, Appendix A)

SP17. **STONE SOURCES**. For a list of quarries that have produced stone that meet the requirements of these specifications, view the website listed below. If a stone source is designated as "New Source," then that source has been tested and the results of those tests have indicated that the stone will meet the material quality requirements. However, the "New Sources" may not have been used; therefore, the stone gradation and quarry production capability may not have been verified. http://155.76.117.11/conops/MVDStoneLST020601.htm

b. Stone may be furnished either from any of the sources posted at the above website, or from any other sources designated by the Contractor and accepted by the Contracting Officer, subject to the conditions hereinafter stated.

c. After the award of the contract, the Contractor shall designate in writing only one source or one combination of sources from which he/she proposes to furnish stone. If the Contractor proposes to furnish stone from a source or sources not posted at the above website, he/she may designate only a single source for stone. Samples for acceptance testing shall be provided as required in the Technical Specifications. If the Contracting Officer does not accept a source for stone, so designated by the Contractor, the Contractor may not propose other sources but shall furnish the stone from a posted source at no additional cost to the Government.

d. In the event that the Contractor proposes to furnish stone from a posted source, and that posted source fails to meet the material quality requirements as set forth in the technical specifications, the Contractor shall identify the reason for the deficiency and shall either rectify the situation or procure stone at another posted quarry. At no time shall stone be accepted that does not fulfill the requirements as described in the technical specifications.

d. Acceptance of a source of stone shall not be construed as acceptance of all material from that source. The right is reserved to reject materials from certain localized areas, zones, strata, or channels, when such materials are unsuitable for stone as determined by the Contracting Officer. Materials produced from a posted source shall meet all the requirements of the Technical Specifications.

SP18. **FIELD OFFICE BUILDING**.

a. The Contractor shall furnish and maintain a temporary building for the exclusive use of the Government inspectors during the life of the contract. The building shall conform to the following requirements:

Floor Space	Not less than 150 sq. ft.
Height of Ceiling	Not less than seven feet
Windows	Not less than four
Doors	At least one
Type of Floor	Wood or Concrete
Telephone	At least one
Active Telephone Lines	At least two

The building shall be of light but weatherproof construction. Windows shall be arranged to open and to be fastened from the inside. All door and window openings shall be provided with suitable screens. The door shall be equipped with a durable hasp and padlock. Interior surfaces of exterior walls and ceilings shall be covered with insulating board. An inside storage room of adequate size shall be provided. The Contractor shall furnish an adequate supply of approved drinking water, sufficient electrical outlets for office calculators and equipment, adequate toilet facilities, all electricity required and sufficient fixtures for adequate lighting, and during cold weather shall furnish adequate heat. The Contractor shall furnish local and long distance service for two phone lines. The building shall also be equipped with air conditioning during hot weather. The office shall be equipped with at least two chairs, one desk, a drawing table, and one two-drawer filing cabinet. The Contractor shall thoroughly clean the office at least weekly. The field office, its location and all facilities shall be subject to the approval of the Contracting Officer.

b. No separate payment will be made for furnishing and maintaining the field office. Such building will remain the property of the Contractor and shall be removed upon completion of the work as provided in the CONTRACT CLAUSE entitled "Operations and Storage Areas".

SP 19. **SUBMITTALS**. Within 15 calendar days after receipt of notice to proceed, the Contractor shall complete and submit to the Contracting Officer, in duplicate, submittal register ENG Form 4288-R listing all submittals and dates. In addition to those items listed on ENG Form 4288-R, the Contractor shall furnish submittals for any deviation from the plans or specifications. The scheduled need dates must be recorded on the document for each item for control purposes. In preparing the document, adequate time (minimum of 30 days) will be allowed for review and approval and possible resubmittal. Scheduling shall be coordinated with the approved progress schedule. The Contractor's Quality Control representative shall review the listing at least every 30 days and take appropriate action to maintain an effective system. Two (2) copies of updated or corrected listing shall be submitted to the Contracting Officer at least every 60 days. Payment will not be made for any material or equipment which does not comply with contract requirements. An original and four (4) copies of all submittals shall be furnished the Contracting Officer. A completed submittal form, ENG Form 4025-R, shall accompany all submittals. Copies of ENG Form 4025-R and ENG Form 4288-R are included at the end of these Special Contract Requirements. (ER 415-1-10, Appendices A and B)

SP 20. **HAUL ROADS**. Whenever practical, one-way haul roads shall be used on this contract. Haul roads built and maintained for this work shall comply with the following:

a. One-way haul roads for off-the-road equipment; e.g., belly dumps, scrapers, and off-the-road trucks shall have a minimum usable width of 25 feet. One-way haul roads for over-the-road haulage equipment only (e.g., dump trucks, etc.) may be reduced to a usable width of 15 feet. When the Contracting Officer determines that it is impractical to obtain the required width for one-way haul roads (e.g., a road on top of a levee), a usable width of not less than 10 feet may be approved by the Contracting Officer, provided a positive means of traffic control is implemented. Such positive means shall be signs, signals, and/or signalman, and an effective means of speed control.

b. Two-way haul roads for off-the-road haulage equipment shall have a usable width of 60 feet. Two-way haul roads for over-the-road haulage equipment only may be reduced to a usable width of 30 feet.

c. Haul roads shall be graded and otherwise maintained to keep the surface free from potholes, ruts, and similar conditions that could result in unsafe operation.

d. Grades and curves shall allow a minimum sight distance of 200 feet for one-way roads and 300 feet for two-way roads. Sight distance is defined as the centerline distance an equipment operator (4.5 feet above the road surface) can see an object 4.5 feet above the road surface. When conditions make it impractical to obtain the required sight distance (e.g., ramps over levees), a positive means of traffic control shall be implemented.

e. Dust abatement shall permit observation of objects on the roadway at a minimum distance of 300 feet.

f. Haul roads shall have the edges of the usable portion marked with posts at intervals of 50 feet on curves and 200 feet maximum elsewhere. Such markers shall extend six-feet above the road surface and for nighttime haulage be provided with reflectors in both directions.

SP21. TEMPORARY PROJECT FENCING. Temporary project fencing shall be installed, if necessary, in accordance as required by Paragraph 04.A04 of EM 385-1-1.

SP22. MAINTENANCE OF TRAFFIC. The road along the levee crown shall be kept open to traffic during the life of the contract. The Contractor shall erect and maintain such signs and barricades as the Contracting Officer deems appropriate for protection of the traveling public. No separate payment will be made for these provisions and all costs incurred by this clause shall be considered an incidental expense of the Contract.

SP23. SUNDAY, HOLIDAY AND NIGHT . Sunday and Holiday work will be at the option of the Contractor, but night work will not be permitted unless otherwise authorized by the Contracting Officer.

SP24. STORAGE OF EQUIPMENT AND MATERIALS. Storage of the Contractor's equipment and materials shall be at those areas within the rights-of-way designated by the Contracting Officer.

SP 25. UTILITY SERVICE.

a. The Contractor shall provide at the site for all work under this contract, the necessary utility services needed for completion of work under this contract.

b. Electricity. All electric current required by the Contractor shall be furnished at his own expense. All temporary connections for electricity shall be subject to the approval of the Contracting Officer. All temporary lines shall be furnished, installed, connected and maintained by the Contractor in a workman-like manner satisfactory to the Contracting Officer, and shall be removed by the Contractor in like manner at his expense prior to completion of the construction.

SP 26. WORK ON OR ADJACENT TO RAILROAD PROPERTY. Inasmuch as this contract involves work on or about the premises of railroad track based by the Burlington Northern Santa Fe Railroad Company, hereinafter referred to as "the Railroad", the Contractor shall coordinate and cooperate with the Railroad as follows:

a. Notify the Contracting Officer, in writing, at least 10 days in advance of commencing work adjacent to or on or under the Railroad property and obtain approval from the Contracting Officer as to the Contractor's methods of construction and operation.

b. Prior to any work being performed on the railroad or railroad property, the Contractor shall give notice, written and/or oral to the Roadmaster of the Burlington Northern Santa Fe Railroad Company, Mr. Joseph Norris, 1 Goodhope St., Cape Girardeau, Missouri, 63703, Telephone (417) 829-4791, at least twenty-four (24) hours in advance of the time the work is to be performed.

c. The Contractor shall so arrange and conduct his work so that there will be no interference with railroad operations, including train, signal, telephone, and telegraphic services, or damage to the property of the Railroad, or to poles, wires, and other facilities of tenants on the right of way of the Railroad. The Contractor shall store materials so as to prevent trespassers from causing damage to trains, or railroad property.

d. Should conditions arising from or in connection with the work require that immediate and unusual provision be made to protect train operation and property of the Railroad, it shall be a part of the required service by the Contractor to make such provision and if, in the judgement of the Contracting Officer such provision is insufficient, the Contracting Officer may at the expense of the Contractor require or provide such provision as may be deemed necessary. The Contractor will be required to take special precaution and care in connection with excavating, shoring, and pile driving adjacent to track to provide adequate lateral support for the tracks and the loads which they carry, without disturbance of track alignment and surface, and avoid obstructing track clearances with working equipment, tools or other material.

e. If the Contractor desires access across the Railroad right of way and tracks at other than an existing and open public road crossing in or incident to construction of the project, the Railroad will permit such Contractor access across said right of way and track provided the Contractor first executes a license agreement

satisfactory to the Railroad, and agrees to install, maintain, provide insurance, and remove at his expense any temporary grade crossing, and bear flagging expense, or other costs which the Railroad deems necessary for protection of its property and operations. The Contractor shall at no time cross the Railroad's right of way and tracks with vehicles or equipment of any kind or character, except at such crossing or crossings as may be established.

f. Worktrain service may be available from the railroad upon request from the Contractor. Rates may be obtained from the General Manager specified in paragraph (b) above.

g. The Contractor shall obtain the anticipated train schedule from the proper railroad authorities and shall coordinate his work in accordance therewith. The Contractor shall be allowed free use of the track area during the periods when trains are not otherwise scheduled to run. Penalties caused by delays, obstruction, etc., shall be borne by the Contractor.

h. No charge or claims of the Contractor against the Railroad will be allowed for hindrance or delay on account of railroad traffic, any work done by the Railroad or other delay incident to or necessary for safe maintenance of railroad traffic or for any delays due to compliance with these special clauses.

i. The Contractor shall assume all liability for any and all damages to his work, employees, servants, equipment and materials caused by Railroad traffic.

j. The Contractor shall, at all times during the period of construction, keep the Railroad's track and roadbed free of earth, mud, rocks, materials, or debris that might be caused to accumulate thereon during progress of the work. Material and equipment shall not be stored where they will interfere with railroad operations, nor on the right of way of the Railroad without first having obtained permission from the Railroad and such permission will be with the understanding that the Railroad will not be liable for damage to such materials and equipment from any cause and that the Railroad may move, or require the Contractor to move, at the Contractor's expense, such material and equipment. In order to minimize the possibility of damage to the railroad tracks resulting from the unauthorized use of equipment, all grading or other construction equipment that is left parked near the tracks unattended by watchmen shall be immobilized to the extent feasible so that it cannot be moved by unauthorized persons.

k. The Contractor shall provide railroad certified flagmen and other protective services as necessary for the protection of railway traffic and property and for those engaged on the work. In general, the requirement of such services will be whenever the Contractor's men or equipment are, or are liable to be, working within specified track clearances.

l. The Contractor will reimburse the Railroad directly for all cost of flagging which is required for this work.

m. The Contractor shall give a minimum of 72 hours advance notice to the Railroad's Engineer for flagging service. No work shall be undertaken until the flagman, or flagmen, are at the job site.

n. The Contractor will be required upon completion of the work to remove from within the limits of the Railroad's right of way, any temporary grade crossings, any temporary erosion control measures used to control drainage, all machinery, equipment, surplus materials, false work, rubbish or temporary buildings of the Contractor, and to leave the right of way in a neat condition.

o. The Contractor shall take care not to foul the tracks thereby causing a hazard during the approach or passing of a train.

(1) An operating track shall be considered fouled and subject to hazard when any object is brought closer than eight (8) feet to the center line of the track.

(2) A signal line or communication line shall be considered fouled and subject to hazard when any object is brought closer than four (4) feet to any wire or cable.

(3) An electrical supply line shall be considered fouled and subject to hazard when any object is brought closer than ten (10) feet to any wire of the line.

(4) Cranes, trucks, power shovels or any other equipment shall be considered as fouling a track, signal line communication or electric supply line when working in such position that failure of equipment with or without lead could foul the track, signal line, communication or electric supply line.

(5) Railroad operations will be considered subject to hazard when explosives are used in the vicinity of Railroad premises, or during the driving or pulling of sheeting adjacent to a track, or when erecting structural steel across or adjacent to a track, or when operations involve swinging booms or chutes that could in any way come nearer than fifteen (15) feet to the center line of a track or when erection or removal of staging, false work, or forms fouls a track or wire line.

p. In the construction of staging, false work or forms, the Contractor shall at all times maintain a minimum side clearance of twelve (12) feet from the center line of the track. This clearance shall be maintained during the passage of trains.

q. The Contractor shall comply with all applicable Federal, State, and local safety and health laws regarding work performed on railroads and railroad property.

SP27. INSURANCE REQUIREMENTS FOR WORK ON OR ADJACENT TO RAILROAD PROPERTY. The Contractor shall furnish evidence of Workmen's Compensation coverage and maintain at all times during work on any Railroad property: (A) Contractor's Public Liability and Property Damage Liability Insurance, including automobile coverage, with limits of $2,000,000/$6,000,000 as to public liability and $2,000,000/$6,000,000 as to property damage liability; (B) If subcontractors are involved, Contractor's Protective Public Liability and Property Damage Liability Insurance, including automobile coverage, with the same limits prescribed in (A) above; and (C) Railroad Protective Public Liability and Property Damage Liability Insurance with the limits of $2,000,000/$6,000,000 as to public liability and $2,000,000/$6,000,000 as to property damage liability. The Railroad Protective policy shall name the applicable Railroad as the insured and contain an endorsement in the form prescribed for State or Federal highway projects for railroad protective liability. The Contractor shall furnish to the applicable railroad, and to the Contracting Officer, the Railroad Protective policy and certificates evidencing the other insurance coverage required above. The Railroad Protective Policies and all insurance certificates shall be subject to the applicable railroad's approval before any work may be started on the railroad's property by the Contractor or his subcontractors. In addition, the Contractor shall furnish evidence of his commitment by the insurance company to notify the railway and the Contracting Officer in writing of any material change, expiration, or cancellation of the policy not less than 30 days before such change, expiration, or cancellation is effective.

SP28. FLOOD EMERGENCY -

a. In the event that a threat of flood is considered to exist or to be impending during work under this contract, the Contractor, if ordered, shall perform emergency operations as directed and an equitable adjustment in the contract price will be made in accordance with the CONTRCT CLAUSE entitled “Changes” on account of the additional work required.

b. Should the Contactor, after specific notification by the Contracting Officer that a flood emergency is considered to exist, or to be impending, fail to complete, without delay, the emergency operations as specified in 1.50a above, or should the flood emergency be of such nature that, in the opinion of the Contracting Officer, the Contractor is unable to complete the required emergency operations by the time it is needed, the Contracting Officer shall have the right to prescribe the location and the order of work by the Contractor for the duration of the flood emergency and to employ the necessary equipment and perform all or any part of such work or to cause all or any part of such work to be performed by others. No payment will be made to the Contractor for any work by the Contracting Officer or by others under the terms of this subparagraph or for added expense to the

Contractor occasioned by construction difficulties arising from operations of the Contracting Officer or others under the terms of this subparagraph.

The right is reserved by the Contracting Officer to suspend the Contractor's operations for such period or periods of time during threat of impending flood or flood emergency as may be necessary. Intervals during which work is suspended by order of the Contracting Officer under the provisions of this subparagraph will not be counted as part of the contract period.

SP29. PROTECTION OF MATERIALS AND WORK. The Contractor shall at all times protect and preserve all materials, supplies, and equipment of every description (including property which may be Government-furnished or owned) and all work performed. All reasonable requests of the Contracting Officer to enclose or specially protect such property shall be complied with without delay. If, as determined by the Contracting Officer, material, equipment, supplies, and work performed are not adequately protected by the Contractor, such property may be protected by the Government and the cost thereof may be charged to the Contractor or deducted from any payments due to him.

SP30. EXISTING FLOOD PROTECTION . The Contractor shall conduct the construction of all work under this contract in such manner that existing flood protection within the limits of the existing embankments is maintained at all times The embankments shall not be disturbed except as necessary to perform the work. When the work under this contract is completed, flood protection within such areas shall be at least equal to that existing before start of construction.

SP31. INSPECTION. All work to be performed under this contract shall conform to the requirements of these specifications and shall be approved by the Contracting Officer. The presence or absence of Government personnel shall not relieve the Contractor of responsibility for the proper execution of the work in accordance with these specifications.

SP32. DESIGNATED BILLING OFFICESC The designated billing office for this contract shall be Caruthersville Area Office, 706 Truman, Caruthersville, Missouri 63830

SP33. YEAR 2000 COMPLIANCE – NOT USED.

--End of Section--

General Decision Number: MO030001 11/19/2004 MO1

Superseded General Decision Number: MO020001

State: Missouri

Construction Types: Heavy and Highway

Counties: Missouri Statewide.

HEAVY AND HIGHWAY CONSTRUCTION PROJECTS

Modification Number	Publication Date
9	11/19/2004

CARP0007-008 04/01/2001
CASS (Richards-Gebauer AFB ONLY), CLAY, JACKSON, PLATTE AND RAY COUNTIES

	Rate	Fringes
Carpenters:		
CARPENTERS & PILEDRIVERS	$ 25.50	6.88

CARP0008-003 05/05/2004
ST. LOUIS COUNTY AND CITY

	Rates	Fringes
Carpenter	$ 29.28	8.22

CARP0011-001 04/01/2003

	Rates	Fringes
Carpenter and Piledriver		
BOLLINGER, BUTLER, CAPE GIRARDEAU, DUNKLIN, MISSISSIPPI, NEW MADRID, PEMISCOT, PERRY, STE. GENEVIEVE, SCOTT, STODDARD AND WAYNE COUNTIES	$ 24.56	7.18

ELEC0001-002 07/01/2004

BOLLINGER, BUTLER, CAPE GIRARDEAU, CARTER, DUNKLIN, FRANKLIN, IRON, JEFFERSON, LINCOLN, MADISON, MISSISSIPPI, NEW MADRID, PEMISCOT, PERRY,REYNOLDS, RIPLEY, ST. CHARLES, ST. FRANCOIS, ST. LOUIS (City and County), STE. GENEVIEVE, SCOTT, STODDARD, WARREN, WASHINGTON AND WAYNE COUNTIES

	Rates	Fringes
Electrician	$ 31.10	17.30

ELEC0002-001 09/01/2004

ADAIR, AUDRAIN, BOONE, CALLAWAY, CAMDEN, CARTER, CHARITON, CLARK, COLE, COOPER, CRAWFORD, DENT, FRANKLIN, GASCONADE,

HOWARD, HOWELL, IRON, JEFFERSON, KNOX, LEWIS, LINCON, LINN,
MACON, MARIES, MARION, MILLER, MONITEAU, MONROE, MONTGOMERY,
MORGAN, OREGON, OSAGE, PERRY, PHELPS, PIKE, PULASKI, PUTNAM,
RALLS, RANDOLPH, REYNOLDS, RIPLEY, ST. CHARLES, ST. FRANCOIS,
ST. LOUIS (City and County), STE. GENEVIEVE, SCHUYLER,
SCOTLAND, SHANNON, SHELBY, SULLIVAN, TEXAS, WARREN AND
WASHINGTON COUNTIES

	Rates	Fringes
Line Construction:		
Groundman Equipment Operator	$ 26.58	4.25+41.30%
Groundman, Groundman Driver.	$ 21.03	4.25+41.30%
Groundman-Winch Driver	$ 21.84	4.25+41.30%
Lineman and Cable Splicer	$ 29.68	4.25+41.30%

ELEC0053-004 08/27/2000

	Rates	Fringes
Line Construction:		
ANDREW, ATCHINSON, BARRY, BARTON, BUCHANAN, CALDWELL, CEDAR, CHRISTIAN, CLINTON, DADE, DALLAS, DAVIESS, DE KALB, DOUGLAS, GENTRY, GREENE, GRUNDY, HARRISON, HICKORY, HOLT, JASPER, LACLEDE, LAWRENCE, LIVINGSTON, McDONALD, MERCER, NEWTON, NODAWAY, OZARK, POLK, ST. CLAIR, STONE, TANEY, VERNON, WEBSTER, WORTH, AND WRIGHT COUNTIES.		
Groundman Powderman	$ 18.69	7.37
Groundman	$ 17.30	6.98
Lineman Operator	$ 25.41	9.30
Lineman	$ 26.75	9.69
BATES, BENTON, CARROLL, CASS, CLAY, HENRY, JACKSON, JOHNSON, LAFAYETTE, PETTIS, PLATTE, RAY, AND SALINE COUNTIES.		
Groundman Powderman	$ 19.45	7.59
Groundman	$ 18.49	7.31
Lineman Operator	$ 25.97	9.46
Lineman	$ 27.80	9.99

ELEC0095-001 06/01/2001

BARRY, BARTON, CEDAR, CRAWFORD, DADE, JASPER, LAWRENCE,
MCDONALD, NEWTON, ST CLAIR, AND VERNON COUNTIES

	Rates	Fringes
Electricians:		
Cable Splicers	$ 20.86	5.68
Electricians	$ 20.51	5.68

ELEC0124-007 08/30/2004

BATES, BENTON, CARROLL, CASS, CLAY, COOPER, HENRY, JACKSON,
JOHNSON, LAFAYETTE, MORGAN, PETTIS, PLATTE, RAY AND SALINE
COUNTIES:

	Rates	Fringes
Electricians:	$ 32.23	13.98

ELEC0257-003 03/01/2003

AUDRAIN (Except Cuivre Township), BOONE, CALLAWAY, CAMDEN, CHARITON, COLE, CRAWFORD, DENT, GASCONADE, HOWARD, MARIES, MILLER, MONITEAU, OSAGE, PHELPS AND RANDOLPH COUNTIES

	Rates	Fringes
Electricians:		
Cable Splicers	$ 24.73	12.165
Electricians	$ 23.73	12.165

ELEC0350-002 12/01/2003

ADAIR, AUDRAIN (East of Highway 19), CLARK, KNOX, LEWIS, LINN, MACON, MARION, MONROE, MONTGOMERY, PIKE, PUTNAM, RALLS, SCHUYLER, SCOTLAND, SHELBY AND SULLIVAN COUNTIES

	Rates	Fringes
Electrician	$ 25.05	10.715

ELEC0453-001 09/01/2001

	Rates	Fringes
Electricians:		
CHRISTIAN, DALLAS, DOUGLAS, GREENE,HICKORY,HOWELL, LACLEDE, OREGON, OZARK,POLK,SHANNON, WEBSTER AND WRIGHT COUNTIES	$ 20.85	5.37+10%
PULASKI AND TEXAS COUNTIES	$ 25.50	5.37+10%
STONE AND TANEY COUNTIES	$ 14.45	4.97+10%

ELEC0545-003 06/01/2004

ANDREW, BUCHANAN, CLINTON, DEKALB, ATCHISON, HOLT, MERCER, GENTRY, HARRISON, DAVIESS, GRUNDY, WORTH, LIVINGSTON, NODAWAY, AND CALDWELL COUNTIES

	Rates	Fringes
Electricians:	$ 29.02	10.33

ELEC0702-004 01/01/2002

BOLLINGER, BUTLER, CAPE GIRARDEAU, DUNKLIN, MADISON, MISSISSIPPI, NEW MADRID, PEMISCOT, SCOTT, STODDARD AND WAYNE COUNTIES

	Rates	Fringes

Line Construction:			
Groundman - Class A		$ 17.07	2.45+25.5%
Groundman Equipment Operator (all crawler type equipment D-4 and larger)...	$ 24.48	2.45+25.5%	
Lineman.		$ 28.68	2.45+25.5%

ENGI0101-001 05/01/2004

ANDREW, ATCHISON, BATES, BENTON, BUCHANAN, CALDWELL, CARROLL, CHARITON, CLINTON, COOPER, DAVIESS, DEKALB, GENTRY, GRUNDY, HARRISON, HENRY, HOLT, HOWARD, JOHNSON, LAFAYETTE, LINN, LIVINGSTON, MERCER, NODAWAY, PETTIS, SALINE, SULLIVAN AND WORTH COUNITES

	Rates	Fringes
Power equipment operators:		
GROUP 1	$ 23.85	9.90
GROUP 2	$ 23.45	9.90
GROUP 3	$ 21.45	9.90

POWER EQUIPMENT OPERATORS CLASSIFICATIONS

GROUP 1: Asphalt roller operator, finish; asphalt paver and spreader; asphalt plant operator; auto grader or trimmer or sub-grader; backhoe; blade operator (all types); boilers - 2; booster pump on dredge; bulldozer operator; boring machine (truck or crane mounted); clamshell operator; concrete mixer paver; concrete plant operator; concrete pump operator; crane operator; derrick or derrick trucks; ditching machine; dragline operator; dredge engineman; dredge operator; drill cat with compressor mounted (self-contained) or similar type self- propelled rotary vdrill (not air tract); drilling or boring machine (rotary-self-propelled); finishing machine operator;greaser; high loader-fork lift-skid loader (all types); hoisting engineer (2 active drums); locomotive operator (standard guage); mechanics and welders (field and plants); mucking machine operator; pile drive operator; pitman crane or boom truck (all types); push cat; quad track; scraper operators (all types); shovel operator; sideboom cats; side discharge spreader; skimmer scoop operators; slip form paver operator (CMI, Rex, Gomeco or equal); la tourneau rooter (all tiller types); tow boat operator; truck crane; wood and log chippers (all types).

GROUP 2: A-frame truck operator; articulated dump truck; back filler operator; boilers (1); chip spreader; churn drill operator; compressor; concrete mixer operator, skip loader; concrete saws (self-propelled); conveyor operator; crusher operator; distributor operator; elevating grader operator; farm tractor (all attachments); fireman rig; float operator; form grade operator; hoisting engine (one drum); maintenance operator; multiple compactor; pavement breaker, self-propelled hydra-hammer (or similar type); paymill operator; power shield; pumps; roller operator (with or without blades); screening and washing plant; self-propelled street broom or sweeper; siphons and jets; straw blower; stump cutting machine; siphons and jets; tank car heater operator (combination boiler and booster); welding machine; vibrating machine operator (not hand held); welding machine.

GROUP 3: Oiler; oiler driver; mechanic.

HOURLY PREMIUMS:

THE FOLLOWING CLASSIFICATIONS SHALL RECEIVE ($ .25) ABOVE

GROUP 1 RATE: Dragline operator - 3 yds. & over; shovel 3 yds. & over; clamshell 3 yds. & over; Crane, rigs or piledrivers, 100' of boom or over (incl. jib.), hoist - each additional active drum over 2 drums

THE FOLLOWING CLASSIFICATIONS SHALL RECEIVE ($ .50) ABOVE

GROUP 1 RATE: Tandem scoop operator; crane, rigs or piledrivers 150' to 200' of boom (incl. jib.)

THE FOLLOWING CLASSIFICATIONS SHALL RECEIVE ($ .75) ABOVE
GROUP 1 RATE: Crane rigs, or piledrivers 200 ft. of boom or over (including jib.)

ENGI0101-005 04/01/2004

CASS, CLAY, JACKSON,PLATTE AND RAY COUNTIES

	Rates	Fringes
Power equipment operators:		
GROUP 1	$ 25.59	10.17
GROUP 2	$ 24.55	10.17
GROUP 3	$ 20.08	10.17
GROUP 4	$ 23.43	10.17

POWER EQUIPMENT OPERATORS CLASSIFICATIONS

GROUP 1: Asphalt roller operator, finish; asphalt paver and spreader; asphalt plant operator; auto grader or trimmer or sub-grader; backhoe; blade operator (all types); boilers-2; booster pump on dredge; boring machine (truck or crane mounted); bulldozer operator; clamshell operator; concrete cleaning decontamination machine operator; concrete mixer paver; concrete plant operator; concrete pump operator; crane operator; derrick or derrick trucks; ditching
machine; dragline operator; dredge engineman; dredge operator; drillcat with compressor mounted (self-contained) or similar type self propelled rotary drill (not air tract); drilling or boring machine (rotary - self-propelled); finishing machine operator; greaser; heavy equipment robotics operator/mechanic; horizontal directional drill operator; horizontal directional drill locator; loader-forklift - skid loader (all types); hoisting engineer (2 active drums); locomotive operator (standard guage); master environmental maintenance mechanic; mechanics and welders (field and plants); mucking machine operator; piledrive operator; pitman crane or boom truck (all types); push cat; quad-track; scraper operators (all types); shovel operator; side discharge
spreader; sideboom cats; skimmer scoop operator; slip-form paver (CMI, REX, Gomaco or equal); la tourneau rooter (all tiller types); tow boat operator; truck crane; ultra high
perssure waterjet cutting tool system operator/mechanic; vacuum blasting machine operator/mechanic; wood and log chippers (all types)

GROUP 2: "A" Frame truck operator; articulated dump truck; back filler operator; boilers (1); chip spreader;churn drill operator; concrete mixer operator, skip loader; concrete saws (self-propelled); conveyor operator; crusher operator; distributor operator; elevating grader operator; farm tractor (all attachments); fireman rig; float operator; form grader operator; hoisting engine (1 drum); maintenance operator; multiple compactor; pavement breaker, self-propelled hydra- hammer (or similar type); power shield; paymill operator; pumps; siphons and jets; stump
cutting machine; tank car heater operator (combination boiler and booster); compressor; roller operator (with or without blades); screening and washing plant; self-propelled street broom or sweeper; straw blower; tank car heater operator (combination boiler and booster);
vibrating machine operator (not hand held)

GROUP 3: Oilers

GROUP 4: Oiler Driver (All Types)

FOOTNOTE:
HOURLY PREMIUMS FOLLOWING CLASSIFICATIONS SHALL RECEIVE
($.25) ABOVE GROUP 1 RATE:
Clamshells - 3 yd. capacity or over; Cranes or rigs, 80 ft. of boom or over (including jib); Draglines, 3 yd. Capacity or over; Piledrivers 80 ft. of boom or over (including jib);

Shovels & backhoes, 3 yd. capacity or over.

ENGI0101-022 05/01/2004

BARRY, BARTON, CAMDEN, CEDAR, CHRISTIAN, DADE, DALLAS, DOUGLAS, GREENE, HICKORY, JASPER, LACLEDE, LAWRENCE, MCDONALD, NEWTON, OZARK, POLK, ST. CLAIR, STONE, TANEY, VERNON, WEBSTER AND WRIGHT COUNTIES and CITY OF SPRINGFIELD

	Rates	Fringes
Power equipment operators:		
GROUP 1	$ 20.82	8.70
GROUP 2	$ 20.47	8.70
GROUP 3	$ 20.27	8.70
GROUP 4	$ 18.22	8.70

POWER EQUIPMENT OPERATORS CLASSIFICATIONS

GROUP 1: Asphalt finishing machine & trench widening spreader; asphalt plant console operator; autograder; automatic slipform paver; backhoe; blade operator – all types; boat operator - tow; boilers-2; central mix concrete plant operator; clamshell operator; concrete mixer paver; crane operator; derrick or derrick trucks; ditching machine; dozer operator; dragline operator; dredge booster pump; dredge engineman; dredge operator; drill cat with compressor mounted on cat; drilling or boring machine rotary self-propelled; highloader; hoisting engine – 2 active drums; launch hammer wheel; locomotive operator; - standard guage; mechanic and welders; mucking machine; off-road trucks; piledriver operator; pitman crane operator; push cat operator; quad trac; scoop operator - all types; shovel operator; sideboom cats; skimmer scoop operators; trenching machine operator; truck crane.

GROUP 2: A-frame; asphalt hot-mix silo; asphalt plant fireman (drum or boiler); asphalt plant man; asphalt plant man; asphalt plant mixer operator; asphalt roller operator; backfiller operator; barber-greene loader; boat operator (bridges and dams); chip spreader; concrete mixer operator - skip loader; concrete plant operator; concrete pump operator; crusher operator; dredge oiler; elevating grader operator; fork lift; greaser-fleet; hoisting engine - 1;locomotive operator - narrow gauge; multiple compactor; pavement breaker; powerbroom - self-propelled; power shield; rooter; side discharge concrete spreader; slip form finishing machine; stumpcutter machine; throttle man; tractor operator (over 50 h.p.); winch truck.

GROUP 3: Boilers - 1; chip spreader (front man); churn drill operator; clef plane operator; concrete saw operator (self-propelled); curb finishing machine; distributor operator; finishing machine operator; flex plane operator; float operator; form grader operator; pugmill operator; roller operator, other than high type asphalt; screening & washing plant operator; siphons & jets; sub-grading machine operator; spreader box operator, self-propelled (not asphalt); tank car heater operator (combination boiler & booster); tractor operator (50 h.p. or less); Ulmac, Ulric or similar spreader; vibrating machine operator, not hand;

GROUP 4: Grade checker; Oiler; Oiler-Driver

HOURLY PREMIUMS:

The following classifications shall receive $ .25 above GROUP 1 rate:
Clamshells - 3 yds. or over; Cranes - Rigs or Piledrivers, 100 ft. of boom or over (including jib); Draglines - 3 yds. or over; Hoists - each additional active drum over 2 drums; Shovels - 3 yds. or over;

The following classifications shall receive $ .50 above GROUP 1 rate:

Tandem scoop operator; Cranes - Rigs or Piledrivers, 150 ft. to 200 ft. of boom (including jib); Tandem scoop.

The following classifications shall receive $ .75 above GROUP 1 rate:
Cranes - Rigs or Piledrivers, 200 ft. of boom or over (including jib.).

ENGI0513-004 05/01/2004

FRANKLIN, JEFFERSON, LINCOLN, ST CHARLES, AND WARREN COUNTIES

	Rates	Fringes
Power equipment operators:		
GROUP 1	$ 26.02	13.77
GROUP 2	$ 24.12	13.77
GROUP 3	$ 21.12	13.77
GROUP 4	20.66	13.77

POWER EQUIPMENT OPERATORS CLASSIFICATIONS

GROUP 1: Backhoe, Cable; Backhoe, Hydraulic (2 cu yds bucket and under regardless of attachment, one oiler for 2 or 3, two oilers for 4 through 6); Backhoe, Hydraulic over 2 cu yds; Cableway; Crane, Crawler or Truck; Crane, Hydraulic - Truck or Cruiser mounted, 16 tons and over; Crane, Locomotive; crane with boom including jib over 100 ft from pin to pin; Crane using rock socket tool; Derrick, Steam; Derrick Car and Derrick Boat; Dragline, 7 cu yds and over; Dredge; Gradall, Crawler or tire mounted; Locomotive, Gas, Steam & other powers; Pile Driver, Land or Floating; Scoop, Skimmer; Shovel, Power (Electric, Gas, Steam or other powers); Shovel, Power (7 cu yds and over); Switch Boat; Whirley; Air Tugger with air compressor; Anchor Placing Barge; Asphalt Spreaker; Athey Force Feeder Loader, self-propelled; Backfilling Machine; Boat Operator – Push Boat or Tow Boat (job site); Boiler, High Pressure Breaking in Period; Boom Truck, Placing or Erecting; Boring Machine, Footing Foundation; Bullfloat; Cherry Picker; Combination Concrete Hoist and Mixer (such as Mixermobile); Compressor, Two 125 CFM and under; Compressor, Two through Four over 125 CFM; Compressor when operator runs throttle; Concrete Breaker (Truck or Tractor mounted); Concrete Pump (such as Pumpcrete machine); Concrete Saw (self-propelled); Concrete Spreader; Conveyor, Large (not selfpropelled) hoisting or moving brick and concrete into, or into and on floor level, one or both; Crane, Cimbing (such as Linden); Crane, Hydraulic - Rough Terrain, self-propelled; Crane, Hydraulic - Truck or Cruiser mounted - under 16 tons; Drilling machine - Self-powered, used for earth or rock drilling or boring (wagon drills and any hand drills obtaining power from other souces including concrete breakers, jackhammers and Barco equipmnet no engineer required); Elevating Grader; Engine Man, Dredge; Excavator or Powerbelt Machine; Finishing Machine, self- propelled oscillating screed; Forklift; Generators, Two through Six 30 KW or over; Grader, Road with power blade; Greaser; Highlift; Hoist, Concrete and Brick (Brick cages or concrete skips operating or on tower, Towermobile, or similar equipment); Hoist, Three or more drums in use; Hoist, Stack; Hydro-Hammer; Lad-A-Vator, hoisting brick or concrete; Loading Machine such as Barber-Greene; Mechanic on job site

GROUP 2: Air Tugger with plant air; Boiler (for power or heating shell of building or temporary enclosures in connection with construction work); Boiler, Temporary; Compressor, One over 125 CFM; Compressor, truck mounted; Conveyor, Large (not self- propelled); Conveyor, Large (not self- propelled) moving brick and concrete (distributing) on floor level; Curb Finishing Machine; Ditch Paving Machine; Elevator (outside); Endless Chain Hoist; Fireman (as required); Form Grader; Hoist, One Drum regardless of size (except brick or concrete); Lad-A-Vator, other hoisting; Manlift; Mixer, Asphalt, over 8 cu ft capacity; Mixer, one bag capacity or less; Mixer, without side loader, two bag capacity or more; Mixer, with side loader, regardless of size, not Paver; Mud Jack (where mud jack is used in conjenction with an air compressor, operator shall be paid $ .55 per hour in addition to his basic hourly rate for covering both

operations); Pug Mill operator; Pump, Sump - self powered, automatic controlled over 2"; Scissor Lift (used for hoisting); Skid Steer Loader; Sweeper, street; Tractor, small wheel type 50 HP and under with grader blade and similar equipment; Welding Machine, One over 400 amp; Winch, operating from truck

GROUP 3: Boat operator - outboard motor, job site; Conveyors (such as Con-Vay-It) regardless of how used; Elevator (inside); Heater operator, 2 through 6; Sweeper, Floor

GROUP 4: Crane type

HOURLY PREMIUMS:

Backhoe, Hydraulic 2 cu yds or less without oiler - $2.00; certified Crane Operator - $1.50;
Certified Hazardous Material Operator $1.50; Crane, climbing (such as Linden) - $.50;
Crane, Pile Driving and Extracting - $ .50 Crane with boom (including job) over 100 ft from pin to pin - add $.01 per foot to maximum of $4.00); Crane, using rock socket tool - $ .50;
Derrick, diesel, gas or electric hoisting material and erecting steel (150 ft or more above ground) - $ .50; Dragline, 7 cu yds and over - $ .50; Hoist, Three or more drums in use - $ .50;
Scoop, Tandem - $.50; Shovel, Power - 7 cu yds and over - $ .50; Tractor, Tandem Crawler - $ .50; Tunnel, man assigned to work in tunnel or tunnel shaft - $ .50; Wrecking, when machines are working on second floor or higher - $ .50

ENGI0513-006 05/01/2004

ADAIR, AUDRAIN, BOLLINGER, BOONE, BUTLER, CALLAWAY, CAPE GIRARDEAU, CARTER, CLARK, COLE, CRAWFORD, DENT, DUNKLIN, GASCONADE, HOWELL, IRON, KNOX, LEWIS, MACON, MADISON, MARIES, MARION, MILLER, MISSISSIPPI, MONITEAU, MONROE, MONTGOMERY, MORGAN, NEW MADRID, OREGON, OSAGE, PEMISCOT, PERRY, PHELPS, PIKE, PULASKI, PUTNAM, RALLS, RANDOLPH, REYNOLDS, RIPLEY, ST. FRANCOIS, STE. GENEVIEVE, SCHUYLER, SCOTLAND, SCOTT, SHANNON, SHELBY, STODDARD, TEXAS, WASHINGTON, AND WAYNE COUNTIES

	Rates	Fringes
Power equipment operators:		
GROUP 1	$ 22.45	13.77
GROUP 2	$ 22.10	13.77
GROUP 3	$ 21.90	13.77
GROUP 4	$ 18.25	13.77

POWER EQUIPMENT OPERATORS CLASSIFICATIONS

GROUP 1: Asphalt finishing machine & trench widening spreader, asphalt plant console operator; autograder; automatic slipform paver; back hoe; blade operator – all types; boat operator tow; boiler two; central mix concrete plant operator; clam shell operator; concrete mixer paver; crane operator; derrick or derrick trucks; ditching machine; dozer operator; dragline operator; dredge booster pump; dredge engineman; dredge operator; drill cat with compressor mounted on cat; drilling or boring machine rotary self-propelled; highloader; hoisting engine 2 active drums; launchhammer wheel; locomotive operator standard guage; mechanics and welders; mucking machine; piledriver operator; pitman crane operator; push cat operator; guad-trac; scoop operator; sideboom cats; skimmer scoop operator; trenching machine operator; truck crane, shovel operator.

GROUP 2: A-Frame; asphalt hot-mix silo; asphalt roller operator asphalt plant fireman (drum or boiler); asphalt plant man; asphalt plant mixer operator; backfiller operator; barber-greene loader; boat operator (bridge & dams); chip spreader; concrete mixer operator skip loader; concrete plant operator; concrete pump operator; dredge oiler; elevating graded operator; fork lift; grease fleet;

hoisting engine one; locomotive operator narrow guage; multiple compactor; pavement breaker; powerbroom self-propelled; power shield; rooter; slip-form finishing machine; stumpcutter machine; side discharge concrete spreader; throttleman; tractor operator (over 50 hp); winch truck; asphalt roller operator; crusher operator.

GROUP 3: Spreader box operator, self-propelled not asphalt; tractor operator (50 h.p. or less); boilers one; chip spreader (front man); churn drill operator; compressor over 105 CFM 2-3 pumps 4" & over; 2-3 light plant 7.5 KWA or any combination thereof; clef plane operator; compressor maintenance operator 2 or 3; concrete saw operator (self-propelled); curb finishing mancine; distributor operator; finishing machine operator; flex plane operator; float operator; form grader operator; pugmill operator; riller operator other than high type asphalt; screening & washing plant operator; siphons & jets; subgrading machine operator; tank car heater (combination boiler & booster); ulmac, ulric or similar spreader; vibrating machine operator; hydrobroom.

GROUP 4: Oiler; grout machine; oiler driver; compressor over 105 CFM one; conveyor operator one; maintenance operator; pump 4" & over one.

FOOTNOTE: HOURLY PREMIUMS

Backhoe hydraulic, 2 cu. yds. or under Without oiler - $2.00 Certified Crane Operator - $1.50; Certified Hazardous Material Operator $1.50; Crane, climbing (such as Linden) - $0.50; Crane, pile driving and extracting - $0.50; Crane, with boom (including jib) over 100' from pin to pin add $0.01 per foot to maximum of $4.00; Crane, using rock socket tool - $0.50; Derrick, diesel, gas or electric, hoisting material and erecting steel (150' or more above the ground) - $0.50; Dragline, 7 cu. yds, and over - $0.50; Hoist, three or more drums in use - $0.50; Scoop, Tandem - $0.50; Shovel, power - 7 cu. yds. or more - $0.50; Tractor, tandem crawler - $0.50; Tunnel, man assigned to work in tunnel or tunnel shaft - $0.50; Wrecking, when machine is working on second floor or higher - $0.50;

ENGI0513-007 05/01/2004

ST. LOUIS CITY AND COUNTY

	Rates	Fringes
Power equipment operators:		
GROUP 1	$ 26.02	13.77
GROUP 2	$ 26.02	13.77
GROUP 3	$ 24.12	13.77
GROUP 4	$ 21.12	13.77
GROUP 5	$ 20.66	13.77

POWER EQUIPMENT OPERATORS CLASSIFICATIONS

GROUP 1: Backhoe, cable or hydraulic; cableway; crane crawler or truck; crane, hydraulic-truck or cruiser mounted 16 tons & over; crane locomotive; derrick, steam; derrick car & derrick boat; dragline; dredge; gradall, crawler or tire mounted; locomotive, gas, steam & other powers; pile driver, land or floating; scoop, skimmer; shovel, power (steam, gas, electric or other powers); switch boat; whirley.

GROUP 2: Air tugger w/air compressor; anchor-placing barge; asphalt spreader; athey force feeder loader (self- propelled); backfilling machine; backhoe-loader; boat operator-push boat or tow boat (job site); boiler, high pressure breaking in period; boom truck, placing or erecting; boring machine, footing foundation; bull- float; cherry picker; combination concrete hoist & mixer (such as mixer mobile); compressor (when operator runs throttle); concrete breaker (truck or tractor mounted); concrete pump, such as pump-crete machine; concrete saw (self-propelled), concrete spreader; conveyor, large (not self-propelled), hoisting or moving brick and concrete into, or into and on floor level, one or both; crane,

hydraulic-rough terrain, self-propelled; crane hydraulic-truck or cruiser mounted-under 16 tons; drilling machines, self-powered use for earth or rock drilling or boring (wagon drills nd any hand drills obtaining power from other sources including concrete breakers, jackhammers and barco equipment-no engineer required); elevating grader; engineman, dredge; excavator or powerbelt machine; finishing machine, self-propelled oscillating screed; forklift; grader, road with power blade; highlift. greaser; hoist, stack, hydro-hammer; loading machine (such as barber-greene); machanic, on job site; mixer, pipe wrapping machines; plant asphalt; plant, concrete producing or ready-mix job site; plant heating-job site; plant mixing-job site; plant power, generating-job site; pumps, two through six self-powered over 2"; pumps, electric submersible, two through six, over 4"; quad-track; roller, asphalt, top or sub-grade; scoop, tractor drawn; spreader box; sub-grader; tie tamper; tractor-crawler, or wheel type with or without power unit, power take-offs and attachments regardless of size; trenching machine; tunnel boring machine; vibrating machine automatic, automatic propelled; welding machines (gasoline or diesel) two through six; well drilling machine

GROUP 3: Conveyor, large (not self-propelled); conveyor, large (not self-propelled) moving brick and concrete distributing) on floor level; mixer two or more mixers of one bag capacity or less; air tugger w/plant air; boiler, for power or heating on construction projects; boiler, temporary; compressor (mounted on truck; curb finishing machine; ditch paving machine; elevator; endless chain hoist; form grader; hoist, one drum regardless of size; lad-a-vator; manlift; mixer, asphalt, over 8 cu. ft. capacity, without side loader, 2 bag capacity or more; mixer, with side loader, regardless of size; pug mill operator; pump, sump-self-powered, automatic controlled over 2" during use in connection with construction work; sweeper, street; welding machine, one over 400 amp.; winch operating from truck; scissor lift (used for hoisting); tractor, small wheel type 50 h.p. & under with grader blade & similar equipment

GROUP 4: Boat operator-outboard motor (job site); conveyor (such as con-vay-it) regardless of how used; sweeper, floor

GROUP 5: Oiler on dredge and on truck crane.

HOURLY PREMIUMS:
Backhoe, hydraulic 2 cu. yds. or under without oiler $2.00; Certified Crane Operator $1.5
Certified Hazardous Material Operator $1.50; Crane, climbing (such as Linden) $ .50
Crane, pile driving and extracting $ .50; Crane, with boom (including jib) over 100' (from pin to pin) add $.01 per foot to maximum of $4.00; Crane, using rock socket tool $ .50; Derrick, diesel, gas or electric, hoisting material and erecting steel (150' or more above ground) .50; Dragline, 7 cu. yds. and over .50; Hoist, three (3) or more drums in use .50; Scoop, Tandem .50; Shovel, power - 7 cu. yds. or more .50; Tractor, tandem crawler .50; Tunnel, man assigned to work in tunnel or tunnel shaft .50; Wrecking, when machine is working on second floor or higher .50;

IRON0010-012 04/01/2003

	Rates	Fringes
Ironworkers		
ANDREW, ATCHISON, BARTON, BATES, BENTON, CALDWELL, CAMDEN, CARROLL, CEDER CHARITON, CHRISTIAN, CLINTON, COOPER, DADE, DALLAS, DAVIESS, DE KALB, GENTRY, GREENE, GRUNDY, HARRISON, HENRY, HICKORY, HOLT, HOWARD, LACLEDE, LINN, LIVINGSTON, MERCER, MONITEAU, MORGAN, NODAWAY, PETTIS, POLK, PUTNAM, RANDOLPH, ST. CLAIR, SALINE, SULLIVAN, TANEY, VERNON, WEBSTER, WRIGHT and WORTH Counties; and portions of ADAIR, BOONE, MACON, MILLER, and		
RANDOLPH Counties	$ 21.10	13.73
BUCHANAN, CASS, CLAY, JACKSON, JOHNSON, LAFAYETTE, PLATTE AND RAY Counties	$ 24.10	13.73

IRON0321-002 12/31/2002

DOUGLAS, HOWELL and OZARK COUNTIES

	Rates	Fringes
Ironworker	$ 18.00	8.06

IRON0396-004 07/31/2002

ST. LOUIS (City and County), ST. CHARLES, JEFFERSON, IRON, FRANKLIN, LINCOLN, WARREN, WASHINGTON, ST. FRANCOIS, STE. GENEVIEVE, and REYNOLDS Counties; and portions of MADISON, PERRY, BOLLINGER, WAYNE, and CARTER Counties

	Rates	Fringes
Ironworker	$ 26.54	11.73

IRON0396-009 08/01/2003

AUDRAIN, CALLAWAY, COLE, CRAWFORD, DENT, GASCONADE, MARIES, MONTGOMERY, OSAGE, PHELPS, PIKE, PULASKI, TEXAS, and WRIGHT Counties; and portions of CAMDEN, DOUGLAS, HOWELL, MILLER, OREGON, BOONE, SHANNON, LACLEDE, MONROE, and RALLS Counties

	Rates	Fringes
Ironworker	$ 21.87	13.00

IRON0577-005 06/01/2002

ADAIR, CLARK, KNOX, LEWIS, MACON, MARION, MONROE, RALLS, SCHUYLER, SCOTLAND, AND SHELBY COUNTIES

	Rates	Fringes
Ironworker	$ 20.85	9.16

IRON0584-004 06/01/2004

BARRY, JASPER, LAWRENCE, MCDONALD, NEWTON AND STONE Counties

	Rates	Fringes
Ironworkers:	$ 19.50	8.47

IRON0782-003 09/01/2003

CAPE GIRARDEAU, MISSISSIPPI, NEW MADRID, SCOTT, & STODDARD Counties; and portions of BOLLINGER, BUTLER, CARTER, DUNKLIN, MADISON, PEMISCOT, PERRY, RIPLEY, and WAYNE Counties

	Rates	Fringes
Ironworkers:		
All Other Work	$ 21.95	9.73

---

* LABO0042-003 03/01/2004

ST. LOUIS (City and County)

	Rates	Fringes
Laborers:		
Plumber Laborers	$ 24.62	7.83

---

* LABO0042-005 03/03/2004

ST. LOUIS (City and County)

	Rates	Fringes
Laborers:		
Dynamiter, Powderman	$ 24.98	7.83
Laborers, Flagperson	$ 24.48	7.83

---

* LABO0424-002 05/01/2004

	Rates	Fringes
Laborers:		
ADAIR, AUDRAIN, BOLLINGER, BOONE, BUTLER, CALLAWAY, CAPE GIRARDEAU, CARTER, CHARITON, CLARK, COLE, COOPER, CRAWFORD, DENT, DUNKLIN, ASCONADE, HOWARD, HOWELL, IRON, KNOX, LEWIS, LINN, MACON, MADISON, MARIES, MARION, MILLER, MISSISSIPPI, MONITEAU, MONROE, NEW MADRID, OREGON, OSAGE, PEMISCOT, PERRY, PHELPS, PIKE, PULASKI, PUTNAM, RALLS, RANDOLPH, REYNOLDS, RIPLEY, ST. FRANCOIS, STE. GENEVIEVE, SCHUYLER, SCOTLAND, SCOTT, SHANNON, SHELBY, STODDARD, SULLIVAN, TEXAS, WASHINGTON, AND WAYNE COUNTIES		
GROUP 1	$ 21.17	7.28
GROUP 2	$ 21.77	7.28
FRANKLIN COUNTY		
GROUP 1	$ 22.62	7.28
GROUP 2	$ 23.22	7.28
JEFFERSON COUNTY		
GROUP 1	$ 22.67	7.28
GROUP 2	$ 23.27	7.28
LINCOLN, MONTGOMERY AND WARREN COUNTIES		
GROUP 1	$ 21.42	7.28
GROUP 2	$ 22.02	7.28

LABORERS CLASSIFICATIONS

GROUP 1 - General laborer-flagman, carpenter tenders; salamander Tenders; Dump Man; Ticket Takers; loading trucks under bins, hoppers, and conveyors; track man; cement handler; dump man on earth fill; georgie buggie man; material batch hopper man; spreader on asphalt machine; material mixer man (except on manholes); coffer dams; riprap pavers rock, block or brick; scaffolds over ten feet not self-supported from ground up; skip man on concrete paving; wire mesh setters on concrete paving; all work in connection with sewer, water, gas, gasoling, oil, drainage pipe, conduit pipe, tile and duct lines and all other pipe lines; power tool operator; all work in connection with hydraulic or general dredging operations; form setters, puddlers (paving only); straw blower nozzleman; asphalt plant platform man; chuck tender; crusher feeder; men handling creosote ties or creosote materials; men working

with and handling epoxy material; topper of standing trees; feeder man on wood pulverizers, board and willow mat weavers and cabelee tiers on river work; deck hands; pile dike and revetment work; all laborers working on underground tunnels less than 25 ft. where compressed air is not used; abutement and pier hole men working six (6) ft. or more below ground; men working in coffer dams for bridge piers and footing in the river; barco tamper; jackson or any other similar tamp; cutting torch man; liners, curb, gutters, ditch lines; hot mastic kettlemen; hot tar applicator; hand blade operator; mortar men or brick or block manholes; rubbing concrete, air tool operator under 65 lbs.; caulker and lead man; chain or concrete saw under 15 h.p.; signal Gan; Guard rail and sign erectors.

GROUP 2 - Skilled laborers - Vibrator man; asphalt raker; head pipe layer on sewer work; batterboard man on pipe and ditch work; cliff scalers working from bosun's chairs; scaffolds or platforms on dams or power plants over 10 ft. high; air tool operator over 65 lbs.; stringline man on concrete paving; sandblast man; laser beam man; wagon drill; churn drill; air track drill and all other similar type drills, gunite nozzle man; pressure grout man; screed man on asphalt; concrete saw 15 h.p. and over; grade checker; strigline man on electronic grade control; manhole builder; dynamite man; powder man; welder; tunnel man; waterblaster - 1000 psi or over; asbestos and/or hazardous waste removal and/or disposal

---

LABO0579-005 05/01/2004

	Rates	Fringes
Laborers: (ANDREW, ATCHISON, BARRY, BARTON, BATES, BENTON, CALDWELL, CAMDEN, CARROLL, CEDAR, CHRISTIAN, CLINTON, DADE, DALLAS, DAVIESS, DEKALB, DOUGLAS, GREENE, GENTRY, GRUNDY, HARRISON, HENRY, HICKORY, HOLT, JASPER, JOHNSON, LACLEDE, LAWRENCE, LIVINGSTON, MCDONALD, MERCER, MORGAN, NEWTON, NODAWAY, OZARK, PETTIS, POLK, ST. CLAIR, SALINE, STONE, TANEY, VERNON, WEBSTER, WORTH AND WRIGHT COUNTIES.)		
GROUP 1	$ 17.69	7.74
GROUP 2	$ 18.24	7.74
Laborers: (BUCHANAN AND LAFAYETTE COUNTIES)		
GROUP 1	$ 19.19	7.99
GROUP 2	$ 19.54	7.99

LABORERS CLASSIFICATIONS

GROUP 1: General Laborers - Carpenter tenders; salamander tenders; loading trucks under bins; hoppers & conveyors; track men & all other general laborers; air tool operator; cement handler-bulk or sack; dump man on earth fill; georgie buggie man; material batch hopper man; material mixer man (except on manholes); coffer dams; riprap pavers - rock, block or brick; signal man; scaffolds over ten feet not self-supported from ground up; skipman on concrete paving; wire mesh setters on concrete paving; all work in connection with sewer, water, gas, gasoline, oil drainage pipe, conduit pipe, tile and duct lines and all other pipe lines; power tool operator, all work in connection with hydraulic or general dredging operations; puddlers (paving only); straw blower nozzleman; asphalt plant platform man; chuck tender; crusher feeder; men handling creosote ties or creosote materials; men working with and handling epoxy material or materials (where special protection is required); rubbing concrete; topper of standing trees; batter board man on pipe and ditch work; feeder man on wood

pulverizers; board and willow mat weavers and cable tiers on river work; deck hands; pile dike and revetment work; all laborers working on underground tunnels less than 25 feet where compressed air is not used; abutment and pier hole men working six (6) feet or more below ground; men working in coffer dams for bridge piers and footings in the river; ditchliners; pressure groutmen; caulker; chain or concrete saw; cliffscalers working from scaffolds, bosuns' chairs or platforms on dams or power plants over (10) feet above ground; mortarmen on brick or block manholes; toxic and hazardous waste work.

GROUP 2: Skilled Laborers - Head pipe layer on sewer work; laser beam man; Jackson or any other similar tamp; cutting torch man; form setters; liners and stringline men on concrete paving, curb, gutters; hot mastic kettleman; hot tar applicator; sandblasting and gunite nozzlemen; air tool operator in tunnels; screed man on asphalt machine; asphalt raker; barco tamper; churn drills; air track drills and all similar drills; vibrator man; stringline man for electronic grade control; manhole builders-brick or block; dynamite and powder men; grade checker.

---

* LABO0660-006 03/01/2004

ST. CHARLES COUNTY

	Rates	Fringes
Laborers:		
GROUP 1	$ 23.59	7.37
GROUP 2	$ 23.59	7.37

LABORERS CLASSIFICATIONS

GROUP 1: General laborer; carpenter tender; salamander tender; dump man; ticket takers; flagman; loading trucks under bins, hoppers, and conveyors; track men; cement handler; dump man on earth fill; Georgie buggie man; material batch hopper man; spreader on asphalt machine; material mixer man (except on manholes); coffer dams; riprap paver - rock, block, or brick; signal man; scaffolds over 10 ft not self-supported from ground up; skipman on concrete paving; wire mech setters on concrete paving; all work in connection with sewer, water, gas, gasoline, oil, drainage pipe, conduit pipe, tile and duct lines and all other pipe lines; power tool operator; all work in connection with hydraulic or general dredging operations; form setters; puddlers (paving only); straw blower nozzleman; asphalt plant platform man; chuck tender; crusher feeder; men handling creosote ties or creosote materials; men working with and handling epoxy material; topper of standing trees; feeder man on wood pulverizer; board and willow mat weavers and cable tiers on river work; deck hands; pile dike and revetment work; all laborers working on underground tunnels less than 25 ft where

compressed air is not used; abutment and pier hole men working 6 ft or more below ground; men working in coffer dams for bridge piers and footings in the river; Barco tamper, Jackson or any other similar tamp; cutting torch man; liners, curb, gutters, ditchliners; hot mastic kettleman; hot tar applicator; hand blade operators; mortar men on brick or block manholes; rubbing concrete; air tool operator under 65 pounds; caulker and lead man; chain saw under 15 hp; guard rail and sign erectors

GROUP 2: Vibrator man; asphalt raker; hand pipe layer on sewer work; batterboard man on pipe and ditch work; cliff scalers working from Bosun's chairs, scaffolds or platforms on dams or power plants over 10 ft high; air tool operator over 65 pounds;stringline man on concrete paving etc.; sand blast man; laser beam man; wagon drill; churn drill; air track drill and all other similar type drills; gunnite nozzle man; pressure grout man; screed man on asphalt; concrete saw 15 hp and over; grade checker; stringline man on electronic grade control; manhole builder; dynamite man; powder man; welder; tunnel man; waterblaster - 1000 psi and over; asbestos and/or hazardous waste removal and or disposal;

LABO0663-002 04/01/2004

CASS, CLAY, JACKSON, PLATTE AND RAY COUNTIES

	Rates	Fringes
Laborers:		
GROUP 1	$ 22.12	8.09
GROUP 2	$ 23.29	8.09

LABORERS CLASSIFICATIONS

GROUP 1: General laborers, Carpenter tenders, salamander tenders, loading trucks under bins, hoppers and conveyors, track men and all other general laborers, air tool operator, cement handler (bulk or sack), chain or concrete saw, deck hands, dump man on earth fill, Georgie Buggies man, material batch hopper man, scale man, material mixer man (except on manholes), coffer dams, abutments and pier hole men working below ground, riprap pavers rock, black or brick, signal man, scaffolds over ten feet not self-supported from ground up, skipman on concrete paving, wire mesh setters on concrete paving, all work in connection with sewer,water, gas, gasoling, oil, drainage pipe, conduit pipe, tile and duct lines and all other pipelines, power tool operator, all work in connection with hydraulic or general dredging operations, straw blower nozzleman,asphalt plant platform man, chuck tender, crusher feeder, men handling creosote ties on creosote materials, men working with and handling epoxy material or materials (where special protection is required), topper of standing trees, batter board man on pipe and ditch work, feeder man

on wood pulverizers, board and willow mat weavers and cable tiers on river work, deck hands, pile dike and revetment work, all laborers working on underground tunnels less than 25 feet where compressed air is not used, abutment and pier hole men working six (6) feet or more below ground, men working in coffer dams for bridge piers and footings in the river, ditchliners, pressure groutmen, caulker and chain or concrete saw, cliffscalers working from scaffolds, bosuns' chairs or platforms on dams or power plants over (10) feet above ground, mortarmen on brick or block manholes, signal man.

GROUP 2: Skilled Laborer - spreader or screed man on asphalt machine, asphalt raker, grade checker, vibrator man, concrete saw over 5 hp., laser beam man, barco tamper, jackson or any other similar tamp, wagon driller, churn drills, air track drills and other similar drills, cutting torch man, form setters, liners and stringline men on concrete paving, curb, gutters and etc., hot mastic kettleman, hot tar applicator, hand blade operators, mortar men on brick or block manholes, sand blasting and gunnite nozzle men, rubbing concrete, air tool operator in tunnels, head pipe layer on sewer work, manhole builder (brick or block), dynamite and powder men.

PAIN0002-002 09/01/2004

CLARK, FRANKLIN, JEFFERSON, LEWIS, LINCOLN, MARION, PIKE, RALLS, ST. CHARLES, ST. LOUIS (CITY & COUNTY), AND WARREN COUNTIES

	Rates	Fringes
Painters:		
Brush	$ 25.94	8.79
Spray	$ 27.94	8.79

PAIN0002-006 02/01/2003

ADAIR, AUDRAIN, BOONE, CALLAWAY, CHARITON, COLE, GASCONADE, HOWARD, KNOX, LINN, MACON, MONROE, MONTGOMERY, OSAGE, PUTNAM, RANDOLPH, SCHUYLER, SCOTLAND, SHELBY AND SULLIVAN COUNTIES and the City of Booneville.

	Rates	Fringes
Painters:		
Bridges, Dams, Locks or Powerhouses	$ 20.44	5.33
Brush, Roller, Paperhanger, Tapers	$ 18.44	5.33
Sandblasting; Epoxy or Any Two Part Coating; Stage or Other Aerial Work Platforms Over 50 ft. high; Lead Abatement	$ 19.44	5.33

Spray; Water Base Epoxy;
Stage Under 50 ft.;
Structural Steel (except
for stairs and railings)....$ 18.94 5.33
Tapers using Ames or
comparable tools (bazooks,
etc.).....$ 18.69 5.33

PAIN0003-004 04/01/2000

BATES, BENTON, CALDWELL, CARROLL, CASS, CLAY, CLINTON, COOPER, DAVIESS, GRUNDY, HARRISON, HENRY, JACKSON, JOHNSON, LAFAYETTE, LIVINGSTON, MERCER, MONITEAU, MORGAN, PETTIS, PLATTE, RAY AND SALINE COUNTIES

Rates Fringes

Painters:
Bazooka; Paperhanger.....$ 22.60 6.01
Brush & Roller; Taper.....$ 22.10 6.01
Lead Abatement; Sprayman....$ 23.10 6.01
Sandblast (Bridge, Stage,
Erected Steel and Storage
Bin and Tanks).....$ 23.60 6.01
Sprayman (Storage Bin &
Tanks, Elevated Tanks);
Stageman (Spray);
Bridgeman (Spray); Steelman
(Spray).....$ 23.85 6.01
Steeplejack - Spray or
Sandblast (other than
Elevated Tanks).....$ 27.79 6.01
Steeplejack (other than
Elevated Tanks).....$ 26.79 6.01
Storage Bin & Tanks
(Roller or Brush); Elevated
Tanks (Roller or Brush);
Stageman; Beltman;
Bridgeman; Steelman; Sand
Blast (Base); Elevator Shaft$ 22.85 6.01

PAIN0098-002 05/01/2000

ANDREW, ATCHISON, BUCHANAN, DE KALB, GENTRY, HOLT, NODAWAY & WORTH COUNTIES

Rates Fringes

Painters:
Brush & Roller.....$ 20.50 4.40
Sandblasters.....$ 21.50 4.40
Steeple Jack.....$ 23.50 4.40

PAIN0203-001 04/01/2004

BARRY, BARTON, CEDAR, CHRISTIAN, DADE, DALLAS, DOUGLAS, GREENE,

HICKORY, HOWELL, JASPER, LAWRENCE, MCDONALD, NEWTON, OZARK, POLK, ST. CLAIR, STONE, TANEY, VERNON, WEBSTER and WRIGHT COUNTIES

	Rates	Fringes
Painters:		
Painters	$ 16.88	7.14
Sandblasters and Highman (over 40')	$ 18.63	7.14
Tapers	$ 17.65	6.35

PAIN1265-003 07/01/2004

CAMDEN, CRAWFORD, DENT, LACLEDE, MARIES, MILLER, PHELPS, PULASKI AND TEXAS COUNTIES

	Rates	Fringes
Painters:		
Brush and Roller	$ 19.54	8.37
Lead Abatement	$ 21.79	8.37
Spray	$ 21.04	8.37
Structural Steel, Sandblasting and All Tank Work	$ 20.79	8.37

PAIN1292-002 07/01/2001

BOLLINGER, BUTLER, CAPE GIRARDEAU, CARTER, DUNKLIN, MISSISSIPPI, NEW MADRID, OREGON, PEMISCOT, PERRY, REYNOLDS, RIPLEY, SCOTT, SHANNON, STODDARD and WAYNE COUNTIES

	Rates	Fringes
Painters:		
Bridges, Stacks & Tanks	$ 22.89	5.97
Commercial	$ 15.44	5.97
Industrial	$ 17.94	5.97
Spray & Abrasive Blasting	$ 17.44	5.97
Taper (Tools)	$ 15.69	5.97
Waterblasting	$ 17.44	5.97

Height Rates (All Areas):
Over 60 ft. $0.50 per hour.
Under 60 ft. $0.25 per hour.

PAIN1292-003 07/01/2001

IRON, MADISON, ST. FRANCOIS, STE. GENEVIEVE and WASHINGTON COUNTIES

	Rates	Fringes
Painters:		
Bridges, Stacks & Tanks	$ 22.89	5.97

Commercial.....$ 17.54 5.97
Industrial.....$ 18.54 5.97
Lead Abatement.....$ 18.29 5.97
Spray & Abrasive Blasting...$ 19.54 5.97
Tapers (Tools).....$ 17.79 5.97
Waterblasting.....$ 19.54 5.97

Height Rates (All Areas):
0ver 60 ft. $0.50 per hour
Under 60 ft. $0.25 per hour.

PLAS0518-006 04/01/2002

BARRY, BARTON, CEDAR, CHRISTIAN, DADE, DALLAS, DOUGLAS, GREENE, HOWELL, JASPER, LACLEDE, LAWRENCE, MCDONALD, NEWTON, OZARK, POLK, STONE, TANEY, VERNON, WEBSTER, AND WRIGHT COUNTIES

Rates Fringes

Cement Masons:.....$ 17.31 3.84

PLAS0518-007 03/22/2004

CASS (Richards-Gebaur AFB only), CLAY, JACKSON, PLATTE AND RAY COUNTIES

Rates Fringes

Cement Masons:.....$ 21.25 11.45

PLAS0518-011 05/01/2001

ANDREW, ATCHISON, BUCHANAN, BATES, CALDWELL, CARROLL, CASS (Except Richards-Gebaur AFB) CLINTON, DAVIESS, DEKALB, GENTRY, GRUNDY, HARRISON, HOLT, JACKSON, LAFAYETTE, LIVINGSTON, MACON, MERCER, NODAWAY AND WORTH COUNTIES

Rates Fringes

Cement Masons:.....$ 23.13 7.15

PLAS0527-001 05/01/2003

Rates Fringes

Cement Masons:
FRANKLIN, LINCOLN, AND
WARREN COUNTIES.....$ 25.01 9.36
JEFFERSON, ST. CHARLES
COUNTIES AND ST. LOUIS
(City and County).....$ 26.18 9.36

PLAS0527-004 05/01/2003

CRAWFORD, DENT, IRON, MADISON, MARION, PHELPS, PIKE, PULASKI, RALLS, REYNOLDS, ST. FRANCOIS, STE. GENEVIEVE, SHANNON, TEXAS,

WASHINGTON COUNTIES

	Rates	Fringes
Cement Mason.....	$ 23.70	9.28

PLAS0908-001 05/01/2002

BOLLINGER, BUTLER, CAPE GIRARDEAU, CARTER, DUNKLIN, MISSISSIPPI, NEW MADRID, OREGON, PEMISCOT, PERRY, RIPLEY, SCOTT, STODDARD, AND WAYNE COUNTIES

	Rates	Fringes
Cement Mason.....	$ 17.40	8.95

PLAS0908-005 03/01/2002

BENTON, CALLAWAY, CAMDEN, COLE, GASCONADE, HENRY, HICKORY, JOHNSON, MARIES, MILLER, MONTGOMERY, MORGAN, OSAGE, PETTIS, SALINE & ST. CLAIR COUNTIES

	Rates	Fringes
Cement Mason.....	$ 17.81	7.65

PLUM0008-003 06/01/2003

	Rates	Fringes
Plumber		
BATES, BENTON, CARROLL, HENRY, LAFAYETTE, MORGAN, PETTIS, RAY, ST.CLAIR, SALINE and VERNON COUNTIES..	$ 26.00	11.61
CASS, CLAY, JACKSON, JOHNSON and PLATTE COUNTIES.	$ 28.83	13.22

PLUM0035-002 01/01/2000

CAMDEN, COLE, CRAWFORD, FRANKLIN, JEFFERSON, MARIES, MILLER, MONITEAU, OSAGE, PHELPS, PULASKI, ST. CHARLES, ST. LOUIS (City and County), WARREN and WASHINGTON COUNTIES

	Rates	Fringes
Plumber.....	$ 26.105	9.74

PLUM0045-003 09/01/2003

ANDREW, ATCHISON, BUCHANAN, CALDWELL, CLINTON, DAVIESS, DEKALB, GENTRY, HARRISON, HOLT, NODAWAY AND WORTH COUNTIES

	Rates	Fringes
Plumbers and Pipefitters.....	$ 28.20	11.70

PLUM0178-003 11/01/2001

BARRY, CEDAR, CHRISTIAN, DADE, DALLAS, DOUGLAS, GREENE, HICKORY, LACLEDE, LAWRENCE, POLK, STONE, TANEY, WEBSTER, AND WRIGHT COUNTIES

	Rates	Fringes
Plumbers and Pipefitters.....	$ 22.10	7.37

PLUM0317-002 07/01/1995

BOONE, CALLAWAY, COOPER, HOWARD, AND RANDOLPH COUNTY (Southern half)

	Rates	Fringes
Plumbers and Pipefitters.....	$ 19.18	3.17

PLUM0533-004 06/01/2004

BATES, BENTON, CARROLL, CASS, CLAY, HENRY, HICKORY, JACKSON, JOHNSON, LAFAYETTE, MORGAN, PETTIS, PLATTE, RAY, SALINE, ST. CLAIR AND VERNON COUNTIES

	Rates	Fringes
Pipefitter.....	$ 31.73	13.73

PLUM0562-004 07/01/2002

ADAIR, AUDRAIN, BOLLINGER, BOONE, BUTLER, CALLAWAY,CAMDEN, CAPE GIRARDEAU,CARTER, CHARITON, CLARK, COLE, COOPER, CRAWFORD, DENT, DUNKLIN, FRANKLIN, GASCONADE, GRUNDY, HOWARD, HOWELL, IRON, JEFFERSON, KNOX, LEWIS, LINCOLN, LINN, LIVINGSTON, MACON, MADISON, MARIES, MARION, MERCER, MILLER, MISSISSIPPI, MONITEAU, MONROE, MONTGOMERY, NEW MADRID, OREGON, OSAGE, PEMISCOTT, PERRY, PHELPS, PIKE, PULASKI, PUTNAM, RALLS, RANDOLPH, REYNOLDS, RIPLEY, ST. CHARLES, ST.FRANCOIS, STE. GENEVIEVE, ST. LOUIS, SCHUYLER, SCOTLAND, SCOTT, SHANNON, SHELBY, STODDARD, SULLIVAN, TEXAS, WARREN, WASHINGTON,AND WAYNE COUNTIES.

	Rates	Fringes
Pipefitter.....	$ 28.75	12.08

PLUM0658-002 07/01/1998

BARTON, JASPER, MCDONALD, AND NEWTON COUNTIES

	Rates	Fringes
Plumbers and Pipefitters.....	$ 16.73	5.33

TEAM0013-001 05/01/2002

	Rates	Fringes
Truck drivers:		
ADAIR, BUTLER, CLARK, DUNKIN, HOWELL, KNOX, LEWIS, OREGON, PUTNAM, RIPLEY, SCHUYLER, AND SCOTLAND COUNTIES		
GROUP 1	$ 21.79	5.50
GROUP 2	$ 21.95	5.50
GROUP 3	$ 21.94	5.50
GROUP 4	$ 22.06	5.50
AUDRAIN, BOLLINGER, BOONE, CALLAWAY, CAPE GIRARDEAU, CARTER, COLE, CRAWFORD, DENT, GASCONADE, IRON, MACON, MADISON, MARIES, MARION, MILLER, MISSISSIPPI, MONROE, MONTGOMERY, NEW MADRID, OSAGE, PEMISCOT, PERRY, PHELPS, PIKE, PULASKI, RALLS, REYNOLDS, ST. FRANCOIS, STE. GENEVIEVE, SCOTT, SHANNON, SHELBY, STODDARD, TEXAS, WASHINGTON, AND WAYNE COUNTIES		
GROUP 1	$ 22.52	5.50
GROUP 2	$ 22.68	5.50
GROUP 3	$ 22.67	5.50
GROUP 4	$ 22.79	5.50

TRUCK DRIVERS CLASSIFICATIONS:

GROUP 1: Flat Bed Trucks, Single Axle; Station Wagons; Pickup Trucks; Material Trucks, Single Axle; Tank Wagon, Single Axle

GROUP 2: Agitator and Transit Mix Trucks

GROUP 3: Flat Bed Trucks, Tandem Axle; Articulated Dump Trucks; Material Trucks, Tandem Axle; Tank Wagon, Tandem Axle

GROUP 4: Semi and/or Pole Trailers; Winch, Fork & Steel Trucks; Distributor Drivers and Operators; Tank Wagon, Semi-Trailer; Insley Wagons, Dumpsters, Half-Tracks, Speedace, Euclids and other similar equipment; A-Frame and Derrick Trucks; Float or Low Boy

---

TEAM0056-001 05/01/2002

	Rates	Fringes

Truck drivers:

ANDREW, BARTON, BATES, BENTON, CALDWELL, CAMDEN, CARROLL, CEDAR, CHARITON, CHRISTIAN, CLINTON, COOPER, DADE, DALLAS, DAVIESS, DEKALB, DOUGLAS, GREENE, HENRY, HICKORY, HOWARD, JASPER, LACLEDE, LAWRENCE, LINN, LIVINGSTON, MONITEAU, MORGAN, NEWTON, PETTIS, POLK, RANDOLPH, ST CLAIR, SALINE, VERNON, WEBSTER, AND WRIGHT COUNTIES

GROUP 1	$ 22.22	5.50
GROUP 2	$ 22.38	5.50
GROUP 3	$ 22.37	5.50
GROUP 4	$ 22.49	5.50
GROUP 5	$ 22.12	5.50

ATCHISON, BARRY, GENTRY, GRUNDY, HARRISON, HOLT, MCDONALD, MERCER, NODADWAY, OZARK, STONE, SULLIVAN, TANEY AND WORTH COUNTIES

GROUP 1	$ 21.49	5.50
GROUP 2	$ 21.65	5.50
GROUP 3	$ 21.64	5.50
GROUP 4	$ 21.76	5.50
GROUP 5	$ 21.39	5.50

BUCHANAN, JOHNSON AND LAFAYETTE COUNTIES

GROUP 1	$ 23.43	5.50
GROUP 2	$ 23.54	5.50
GROUP 3	$ 23.58	5.50
GROUP 4	$ 23.65	5.50
GROUP 5	$ 23.33	5.50

TRUCK DRIVER CLASSIFICATIONS

GROUP 1: Flat bed trucks single axle; station wagons; pickup trucks; material trucks single axle; tank wagons single axle.

GROUP 2: Agitator and transit mix-trucks.

GROUP 3: Flat bed trucks tandem axle; articulated dump trucks; material trucks tandem axle; tank wagons tandem axle.

GROUP 4: Semi and/or pole trailers; winch, fork & steel trucks; distributor drivers & operators; tank wagons semi-trailer; insley wagons, dumpsters, half-tracks, speedace, euclids & other similar equipment; A-frames and derrick trucks; float or low boy.

GROUP 5: Warehousemen.

TEAM0245-001 03/25/1998

BARRY, BARTON, CAMDEN, CEDAR, CHRISTIAN, DALLAS, DENT, DOUGLAS, GREENE, HICKORY, HOWELL, JASPER, LACLEDE, LAWRENCE, MCDONALD, MILLER, NEWTON, OZARK, PHELPS, POLK, PULASKI, SHANNON, STONE, TANEY, TEXAS, VERNON, WEBSTER AND WRIGHT COUNTIES

	Rates	Fringes
Truck drivers:		
Traffic Control Service Driver	$ 12.90	3.56+a

PAID HOLIDAYS: New Year's Day, Decoration Day, July 4th, Labor Day, Thanksgiving Day, Christmas Day, employee's birthday and 2 personal days.

TEAM0541-001 03/22/2004

CASS, CLAY, JACKSON, PLATTE AND RAY COUNTIES

	Rates	Fringes
Truck drivers:		
GROUP 1	$ 24.40	8.00
GROUP 2	$ 23.85	8.00
GROUP 3	$ 23.34	8.00

TRUCK DRIVERS CLASSIFICATIONS

GROUP 1: Mechanics and Welders, Field; A-Frame Low Boy-Boom ruck Driver.

GROUP 2: Articulated Dump Truck; Insley Wagons: Dump Trucks, Excavating, 5 cu yds and over; Dumpsters; Half-Tracks: Speedace: Euclids & similar excavating equipment Material trucks, Tandem Two teams; Semi-Trailers; Winch trucks-Fork trucks; Distributor Drivers and Operators; Agitator and Transit Mix; Tank Wagon Drivers, Tandem or Semi; One Team; Station Wagons; Pickup Trucks; Material Trucks, Single Axle; Tank Wagon Drivers, Single Axle

GROUP 3: Oilers and Greasers - Field

TEAM0541-002 03/25/2000

BATES, CASS, CLAY, HENRY, JACKSON, JOHNSON, LAFAYETTE, PLATTE, AND RAY COUNTIES

	Rates	Fringes
Truck drivers:		
Traffic Control Service		

Driver.....$ 14.15 2.44+a

a. PAID HOLIDAYS: New Year's Day, Decoration Day, July 4th,Labor Day, Thanksgiving Day, Christmas Day, Employee's birthday and 2 personal days.

TEAM0682-002 05/01/2003

ST LOUIS CITY AND COUNTY

	Rates	Fringes
Truck drivers:		
GROUP 1	$ 22.635	3.91+a+b
GROUP 2	$ 22.835	3.91+a+b
GROUP 3	$ 22.935	3.91+a+b
GROUP 4	$ 22.125	3.91+a+b

a. PENSION: $25.60 per day, $128.00 maximum per week.

b. HAZMAT PREMIUM: If Hazmat certification on a job site is required by a state or federal agency or requested by project owner or by the employer, employees on that job site shall receive $1.50 premium pay.

TRUCK DRIVERS CLASSIFICATIONS

GROUP 1 - Pick-up trucks; forklift, single axle; flatbed trucks; job site ambulance, and trucks or trailers of a water level capacity of 11.99 cu. yds. or less

GROUP 2 - Trucks or trailers of a water level capacity of 12.0 cu yds. up to 22.0 cu yds. including euclids, speedace and similar equipment of same capacity and compressors

GROUP 3 - Trucks or trailers of a water level capacity of 22.0 cu. yds & over including euclids, speedace & all floats, flatbed trailers, boom trucks, winch trucks, including small trailers, farm wagons tilt-top trailers, field offices, tool trailers, concrete pumps, concrete conveyors & gasoline tank trailers and truck mounted mobile concrete mixers

GROUP 4 - Warehousemen.

FOOTNOTE FOR TRUCK DRIVERS:

a. PAID HOLIDAYS: Christmas Day, Independence Day, Labor Day, Memorial Day, Veterans Day, New Years Day, Thanksgiving Day

PAID VACATION: 3 days paid vacation for 600 hours of service in any one contract year; 4 days paid vacation for 800 hours of service in any one contract year; 5 days paid vacation for 1,000 hours of service in any one contract year. When such an employee has completed 3 years of

continuous employment with the same employer and then works the above required number of hours, he shall receive double the number of days of vacation specified above. When such an employee has completed 10 years of continuous employment with the same employer and then works the above required number of hours, he shall receive triple the number of days of vacation specified above. When such an employee has completed 15 years of continuous employment with the same employer and then works the above required number of hours, he shall receive 4 times the number of days of vacation specified above.

TEAM0682-003 05/01/2002

ST.CHARLES, FRANKLIN, JEFFERSON, LINCOLN AND WARREN COUNTIES

	Rates	Fringes
Truck drivers:		
GROUP 1	$ 22.435	3.46+a+b+c
GROUP 2	$ 22.635	3.46+a+b+c
GROUP 3	$ 22.735	3.46+a+b+c
GROUP 4	$ 21.925	3.46+a+b+c

a.PAID HOLIDAYS: Christmas, Fourth of July, Labor Day, Memorial Day, Veterans Day, to be celebrated on either its National Holiday or on the day after Thanksgiving, whichever is agreed upon by the Association and the Union, New Year's Day and Thanksgiving Day.

PAID VACATION: 3 days paid vacation for 600 hours of service in any one contract year; 4 days paid vacation for 800 hours of service in any one contract year; 5 days paid vacation for 1,000 hours of service in any one contract year. When such an employee has completed 3 years of continuous employment with the same employer and then works the above required number of hours, he shall receive double the number of days of vacation specified above. When such an employee has completed 10 years of continuous employment with the same employer and then works the above required number of hours, he shall receive triple the number of days of vacation specified above.
When such an employee has completed 15 years of continuous employmen with the same employer and then works the above required number of hours, he shall receive 4 times the number of days of vacation specified above. b.Pension: $22.80 per day either worked or compensated to a maximum of $114.00 per week.

c.Hazmat Pay: If Hazmat Certification on a job site is required by a state or federal agency or requested by project owner or by the employer, employees on that job site shall receive $1.50 per hour premium pay.

TRUCK DRIVER CLASSIFICATIONS:

GROUP 1: Trucks or Trailers of a Water Level Capacity of 11.99 cu. yds. or less, Forklift Trucks, Job Site Ambulances, Pickup Trucks, Flatbed Trucks.

GROUP 2: Trucks or Trailers of a Water Level Capacity of 12.0 cu. yds. up to 22 cu. yds., Euclids, Speedace and Similar Equipment of Same Capacity and Compressors.

GROUP 3: Trucks or Trailers of a Water Level Capacity of 22.0 cu. yds. and over, Euclids and all Floats, Flatbed Trailers, Boom Trucks, Winch Trucks, Including Small Trailers, Farm Wagons, Tilt Top Trailers, Tool Trailers, Concrete Pumps, Concrete Conveyors, Gasoline TankTrailers, Truck Mounted Mobile Concrete Mixers, End Dump, Side Dump and Articulated Dump Trucks

GROUP 4: Warehousemen.

WELDERS - Receive rate prescribed for craft performing operation to which welding is incidental.

==========

Unlisted classifications needed for work not included within the scope of the classifications listed may be added after award only as provided in the labor standards contract clauses (29CFR 5.5 (a) (1) (ii)).

In the listing above, the "SU" designation means that rates listed under the identifier do not reflect collectively bargained wage and fringe benefit rates. Other designations indicate unions whose rates have been determined to be prevailing.

WAGE DETERMINATION APPEALS PROCESS

1.) Has there been an initial decision in the matter? This can be:

* an existing published wage determination
* a survey underlying a wage determination
* a Wage and Hour Division letter setting forth a position on a wage determination matter
* a conformance (additional classification and rate) ruling

On survey related matters, initial contact, including requests for summaries of surveys, should be with the Wage and Hour Regional Office for the area in which the survey was conducted because those Regional Offices have responsibility for the Davis-Bacon survey program. If the response from this initial contact is not satisfactory, then the process described in 2.) and 3.) should be followed.

With regard to any other matter not yet ripe for the formal process described here, initial contact should be with the Branch of Construction Wage Determinations. Write to:

Branch of Construction Wage Determinations

Wage and Hour Division

U.S. Department of Labor

200 Constitution Avenue, N.W.

Washington, DC 20210

2.) If the answer to the question in 1.) is yes, then an interested party (those affected by the action) can request review and reconsideration from the Wage and Hour Administrator (See 29 CFR Part 1.8 and 29 CFR Part 7). Write to:

Wage and Hour Administrator

U.S. Department of Labor

200 Constitution Avenue, N.W.

Washington, DC 20210

The request should be accompanied by a full statement of the interested party's position and by any information (wage payment data, project description, area practice material, etc.) that the requestor considers relevant to the issue.

3.) If the decision of the Administrator is not favorable, an interested party may appeal directly to the Administrative Review Board (formerly the Wage Appeals Board). Write to:

Administrative Review Board

U.S. Department of Labor

200 Constitution Avenue, N.W.

Washington, DC 20210

4.) All decisions by the Administrative Review Board are final.

==========

END OF GENERAL DECISION

ITEM NO. R-48.88 A.C. (PARCEL NO. 2)
RELIEF WELLS, NASH, MISSOURI
LITTLE RIVER DRAINAGE DISTRICT
MISSISSIPPI RIVER LEVEES - CONSTRUCTION
STORM WATER POLLUTION PREVENTION PLAN
FOR STORM WATER GENERAL PERMIT
U.S. ARMY CORPS OF ENGINEERS, MEMPHIS DISTRICT

1.0 LOCATION AND NATURE OF ACTIVITY

This project is located near Scott City, Missouri in Cape Girardeau County, Missouri landside of the Little River Headwater Diversion Channel Main Line levee. The project will begin at levee mile 8/25+36 and extend to levee mile 9/45+25. The work consists of relief well installations, collector ditch excavation, outlet channel enlargement for Ditch 8, riprap placement, culvert installation and the gravel surfacing of inline culvert crossings.

A set of construction drawings showing the project location and the details of installation of the wells collector ditches and outlet ditches will be located on the site at all times.

2.0 AREA AFFECTED

The total area of the site, within the right-of-way limits, which will be impacted by construction, is approximately 70 acres.

3.0 CONTROL OF POLLUTANTS DURING CONSTRUCTION

3.1 NON-STRUCTURAL MEASURES

3.1.1 General

Prior to the beginning of any construction, the Contracting Officer will identify all land resources to be preserved within the Contractor's work area. The Contractor shall not remove, cut, deface, injure, or destroy land resources including trees, shrubs, vines, grasses, topsoil, and land forms outside the construction limits without special permission. The Contractor shall provide effective protection for land, water and vegetation resources at all times. The Contractor shall construct or install temporary and/or permanent erosion and sedimentation control features as indicated herein to minimize pollutants entering into natural streams eventually flowing into the Mississippi River, other water bodies or wetlands.

3.1.2 Protection of Landscape

Trees, shrubs, vines, grasses, landforms and other landscape features indicated and defined on the contract drawings or as directed by the Contracting Officer to

be preserved shall be clearly identified by marking, fencing, wrapping with boards, or other approved techniques.

3.1.3 Reduction of Exposure of Unprotected Erodible Soils

All earthwork shall be planned and conducted to minimize the duration of exposure of unprotected soils. Vegetative ground cover shall not be destroyed, removed or disturbed more than 20 calendar days prior to grading or earth moving. Clearing shall progress in reasonably sized increments as needed to use the areas developed. To the extent feasible, material embankments, side slopes, back slopes, berms and any other exposed surfaces shall be stabilized by temporary seeding, mulching, fabric mats or other approved stabilization methods, as soon as possible after material placement, or within 14 days on areas that will remain unfinished more than 21 calendar days. Should construction be halted, for any reason, temporarily or permanently, for more than 21 days, in any portion of the site, temporary or permanent turfing measures, or other approved temporary stabilization of exposed areas, such as mulching, shall be accomplished within 14 days after construction is halted.

3.2 STRUCTURAL MEASURES

3.2.1 General

Temporary erosion and sediment control measures such as silt fences, check dams, and sedimentation basins shall be constructed and maintained until permanent drainage and erosion control facilities are complete and operative. Placement of perimeter controls shall commence with initiation of construction and shall remain in effect during the remainder of construction until final stabilization of those portions of the site upward of the perimeter control. Temporary erosion controls shall be maintained until final stabilization of exposed areas, after which they shall be removed. All structural devices shall be constructed in accordance with Temporary Erosion Control Devices Standard Drawing.

3.2.2 Silt Fences

If used, silt fences shall be constructed in those locations where storm water may flow from the construction site; all necessary efforts shall be employed to minimize the entry of excavated material entering into natural streams eventually flowing into the Mississippi River, other water bodies or wetlands.

3.2.3 Check Dams

Check dams shall be constructed across inlet ditches, drains and swales using baled straw or equivalent devices to minimize sediment entry into the Mississippi River, other water bodies, or wetlands. Check dams shall be inspected for sediment accumulation after each significant rainfall and sediment removed when it reaches one-half the height of the barrier. Sediment removal shall include removal and disposition in a location where it will not erode into construction areas, watercourses or wetlands.

3.2.4 Sediment Basins

Sediment from construction areas with 10 or more disturbed acres at one time shall be trapped in temporary or permanent sediment basins. After each storm, the basins shall be allowed to settle for 24 to 48 hours after which the basins shall be pumped dry. In order to maintain basin effectiveness, accumulated sediment shall be removed when the depth of sediment reaches one-third of the depth of structure in any part of the pool. Overflow shall be controlled by paved weir, by vertical overflow pipe draining from the surface, or by a spillway protected by baled straw filter barriers in the spillway and at the outlet toe of the spillway. The collected topsoil sediment shall be reused for fill on the construction site, and/or conserved for use at another site(s). If used, the basins shall provide at least 3,600 cubic feet of storage for each acre drained. Where such basins are not used, other equivalent sediment control measures are required.

3.2.5 Other Measures

Other temporary erosion and sediment control measures such as berms, dikes, swales, and drains may be used with, or in lieu of, the above-mentioned measures provided they are consistent with Best Management Practices (BMPs). They shall be maintained until permanent drainage and erosion control facilities are complete and operative. Earthen erosion control features shall be compacted and stabilized immediately with vegetation as specified in paragraphs 4.1.3 and 4.1.4.

3.2.6 Velocity Dissipation Devices

Should drains or swales be used, they shall be constructed with velocity dissipation devices (check dams) to reduce the need for more stringent erosion control practices in the swale or drain. These devices shall be removed after the erosive areas have been stabilized.

4.0 CONTROL OF POLLUTANTS AFTER CONSTRUCTION

4.1 ESTABLISHMENT OF TURF

4.1.1 General

Turf shall be established as a permanent erosion control measure on any area which is disturbed during construction. All material embankments, all berm areas, and any other disturbed areas shall be turfed. Turf shall be established in accordance with the Contract Specifications.

4.1.2 Fertilizer

Fertilizer shall be distributed uniformly over the areas to be seeded at a rate which will supply not less than 40 pounds of available nitrogen, 40 pounds of available phosphorous, and 40 pounds of potash per acre.

4.1.3 Seeding

Seed sown for permanent turfing shall be sown as specified in the technical specifications. Temporary seeding shall consist of grasses appropriate for the season when they are sown. A satisfactory method of sowing shall be employed, using approved mechanical power-drawn seeders, mechanical hand-seeders, broadcast-seeders, or other approved methods. When conditions are such by reason of drought, high winds, excessive moisture, or other factors that satisfactory results are not likely to be obtained, work shall be halted as directed by the Contracting Officer. Such work may resume only when conditions are favorable or when approved alternative or corrective measures and procedures have been identified and approved by the Contracting Officer. If inspection either during seeding operations or after there is a show of green indicates that areas have been left unplanted, additional seed shall be sown.

4.1.4 Mulching

If used, mulch shall be materials that do not contain noxious grass or weed seed that might be detrimental to the turfing being established or to adjacent farmland. Mulch shall be spread uniformly in a continuous blanket, using two tons per acre of straw mulch or 1,200 pounds per acre of wood cellulose fiber mulch.

4.2 STATE AND LOCAL CONTROLS

There are no known State or local erosion and sediment control requirements applicable to this work other than those met by the requirements of this permit. In the event that there

are State or local erosion and sediment control requirements, it shall be the responsibility of the Contractor to identify and comply with all applicable requirements.

5.0 RUNOFF COEFFICIENT, IMPERVIOUS AREAS, SOILS

The runoff coefficient immediately after construction is estimated to range between 0.10 and 0.30. Once the material embankment and other disturbed areas have been re-vegetated, the runoff coefficient should remain in approximately the same range with no increase in impervious areas. Soils in the area consist of silt and silty sands with seams of fat and lean clays underlain by sand. For further information regarding soil borings contact the Memphis District Office of the U.S. Army Corps of Engineers or refer to the contract drawings.

6.0 RECEIVING WATER

The receiving stream for the well water is Ditch 8. Ditch 8 drains into Upper Ditch 1, which is part of the Little River Drainage System, that flows through Big Lake, and enters into the St. Francis Floodway System. The St. Francis Floodway System enters the Mississippi River above Helena, Arkansas.

7.0 INSPECTIONS

7.1 GENERAL

Quality assurance representatives shall inspect disturbed areas of the construction site and areas used for storage of materials that are exposed to precipitation that have not been finally stabilized, structural control measures and locations where vehicles enter or exit the site every seven calendar days and within 24 hours of the end of a storm that is 0.5 inches or greater. Where sites have been stabilized, inspections shall be conducted at least once every month.

7.2 DISTURBED AREAS AND AREAS USED FOR MATERIAL STORAGE

Disturbed areas and areas used for material storage that are exposed to precipitation shall be inspected for evidence of, or the potential for, pollutants entering the drainage system. Erosion and sediment control measures identified in the plan shall be observed to ensure correct operation. Where discharge locations or points are accessible, they shall be inspected to ascertain whether erosion control measures are effective in preventing significant impact to receiving waters. Locations where vehicles enter or exit the site shall be inspected for evidence of off-site sediment tracking.

7.3 MODIFICATION OF POLLUTION PLAN

Based on the results of the inspection in paragraph 7.2, the site description identified in paragraphs 1 and 2 of this plan shall be revised as appropriate, but in no case more than

seven calendar days following the inspection. Such modification shall provide for timely implementation of any changes to the plan within seven calendar days following the inspection.

7.4 REPORTS

A report summarizing the scope of the inspection, name(s) and qualifications of personnel making the inspection, the date(s) of the inspection, major observations relating to the implementation of the Storm Water Pollution Prevention Plan (SWPPP), and actions taken shall be recorded and retained by the Contracting Officer as part of the SWPPP for at least three years from the date the site is finally stabilized.

8.0 OTHER CONSIDERATIONS

8.1 LOCATION OF CONSTRUCTION IN REGARD TO WATERS CLASSIFIED IN 10 CSR 20-7.013

Construction is not within 1,000 feet of waters classified in 10 CSR 20-7.013, Water Quality Standards, as:

a. Public drinking water supply lakes
b. Outstanding National Resource Waters
c. Outstanding State Resource Waters
d. Streams designated for cold water sport fishery
e. A lake in EPA's Clean Lakes Program

8.2 PROXIMITY OF SITE TO MAJOR RESERVOIRS

Construction is not within 100 feet of waters classified as major reservoirs.

9.0 DEFINITIONS

9.1 BEST MANAGEMENT PRACTICES (BMPs)

Schedules of activities, prohibitions of practices, maintenance procedures, and other management practices to prevent or reduce the pollution of waters of the State. BMPs also include treatment requirements, operation procedures and practices to control plant site runoff, spillage or leaks, sludge or waste disposal, or drainage from raw material storage.

9.2 COMMENCEMENT OF CONSTRUCTION

The initial disturbance of soils associated with borrow material excavation, or other construction activities.

9.3 DRAINAGE SWALE

A drainage way with a lining of grass, riprap, asphalt, concrete, or other material installed to convey runoff without causing erosion.

9.4 CHECK DAM

Small temporary dams constructed across a swale or drainage ditch to reduce the velocity of runoff flows.

9.5 FINAL STABILIZATION

All soil-disturbing activities at the site have been completed, and a uniform perennial vegetative cover with a density of 85 percent of the cover for the area has been established or equivalent stabilization measures (such as the use of mulches or geo-textiles) have been employed.

10.0 CERTIFICATION

"I certify under penalty of law that this document and all attachments were prepared under my direction or supervision in accordance with a system designed to assure that qualified personnel properly gather and evaluate the information submitted. Based on my inquiry of the person or persons who manage the system, or those persons directly responsible for gathering the information, the information submitted is, to the best of my knowledge and belief, true, accurate, and complete. I am aware that there are significant penalties for submitting false information, including the possibility of fine and imprisonment for knowing violations."

Dennis J. Kamper, P.E., Chief, Eng. Division, COE (901) 544-3227

Name & Official Title Phone No.

_____ _____

Signature Date Signed

_____

Name & Official Title of Contractor Phone No.

_____ _____

Signature Date Signed

_____

Name & Official Title of Contractor Phone No.

_____ _____

Signature Date Signed

TECHNICAL SPECIFICATIONS

TABLE OF CONTENTS

Section No.	Description
	DIVISION 1 - GENERAL REQUIREMENT
01025	Measurement and Payment
01130	Environmental Protection
01330	Submittal Procedures
01451	Contractor Quality Control
01452	Project Signs, Barricades, and Traffic Control Signs
	DIVISION 2 - SITE WORK
02100	Construction Procedures
02114	Clearing
02215	Geotextile (Filter Fabric)
02225	Earthwork
02542	Stone Protection
02546	Aggregate Surfacing
02700	Culvert Installation
02708	Relief Wells
02710	Piezometers
02936	Establishment of Turf
	DIVISIONS 3 THRU 16 - NOT USED

DIVISION 1 - GENERAL REQUIREMENTS

SECTION 01025

MEASUREMENT AND PAYMENT

TABLE OF CONTENTS

PART 1 GENERAL
1.1 LUMP SUM PAYMENT ITEMS
1.1.1 General
1.1.2 Lump Sum Items
1.2 UNIT PRICE PAYMENT ITEMS
1.2.1 Unit Price Items
PART 2 PRODUCTS (Not Used)
PART 3 EXECUTION (Not Used)

SECTION 01025

MEASUREMENT AND PAYMENT

PART 1 GENERAL

1.1 LUMP SUM PAYMENT ITEMS

1.1.1 General

Payment items for the work of this contract for which contract lump sum payments will be made are listed in the BIDDING SCHEDULE and described below. All costs for items of work, which are not specifically mentioned to be included in a particular lump sum or unit price payment item, shall be included in the listed lump sum item most closely associated with the work involved. The lump sum price and payment made for each item listed shall constitute full compensation for furnishing all plant, labor, materials, and equipment, and performing any associated Contractor quality control, meeting safety requirements, tests and reports, and for performing all work required for which separate payment is not otherwise provided.

1.1.2 Lump Sum Items

(1) "Mobilization and Demobilization"

a. Payment

Payment will be made for all costs associated with operations necessary for mobilization and demobilization as specified in Section 00700 DFARS 252.236-7004.

b. Unit of measure, lump sum: LS.

(2) "Clearing"

a. Payment

Payment will be made for costs associated with operations necessary for clearing as specified in SECTION

02114.

b. Unit of measure, lump sum: LS.

(3) "Aggregate Surfacing"

a. Payment

Payment for aggregate surfacing will be made at the contract lump sum price for "Aggregate Surfacing", which price and payment shall constitute full compensation for furnishing all material and equipment and performing all labor for placing aggregate surfacing and all other operations incidental thereto; all as specified in SECTION 02546 – AGGREGATE SURFACING.

b. Unit of measure; lump sum: LS.

(4) "Establishment of Turf"

a. Payment

Payment for fertilizing and seeding will be made at the contract lump sum for "Establishment of Turf", which price and payment shall constitute full compensation for preparation of ground surfaces, furnishing and distributing fertilizer; and performing all operations incidental thereto, all as specified in SECTION 02936. No payment for fertilizing, spot sodding and/or sprigging will be made until acceptance by the Contracting Officer or his/her representative.

b. Unit of measure, lump sum: LS.

(5) "Environmental Protection"

a. Payment

Payment will be made for costs associated with operations necessary for environmental protection as specified in SECTION 01130 and the SWPPP.

b. Unit of measure, lump sum: LS.

1.2 UNIT PRICE PAYMENT ITEMS

1.2.1 Unit Price Items

(1) "Excavation"

a. Measurement

A survey of the site for excavation of the ditches in the vicinity of the relief wells and in Ditch 8 will be made in accordance with the SPECIAL CONTRACT REQUIREMENTS entitled "Quantity Surveys-Alternate I," and all measurement of excavation will be based on this survey. The quantity of ditch excavation and excavation for riprap placement to be paid for will be computed between the ground surface, as determined by the above noted surveys, and the theoretical slope lines and grade lines for such excavation as indicated on the drawings and/or specified herein. No allowance will be made for over-depth excavation, and for the removal of any material outside the required side slope lines.

b. Payment

Payment for excavation, measures as prescribed hereinabove, will be made at the applicable contract unit price per cubic yard for "Excavation", which price and payment shall constitute full compensation for furnishing all materials and equipment and performing all labor for excavation for ditches in the vicinity of the relief wells, excavation for riprap placement and the widening of Ditch 8 as shown on the drawings; placement and disposal of excavated material; and all other operations incidental thereto as specified in SECTION 02225.

c. Unit of Measure, cubic yard: CY

(2) "Relief Wells (8 inch and 10 inch)"

a. Measurement

Relief wells will be measured for payment by the linear foot of completed well between the ground surface and the elevation at the bottom of the well screen.

b. Payment

Payment for relief wells will be made at the applicable contract unit price, per linear foot, for "Relief Wells (8 inch and 10 inch)", which price shall constitute full compensation for construction of relief wells all as specified in SECTION 02708. Wells ordered abandoned by the Contracting Officer before installation of well screen and riser, due to no fault of the Contractor, will be paid for at 50 percent of the applicable contract unit price per linear foot, for "Relief Wells (8 inch and 10 inch)". Wells ordered abandoned by the

Contracting Officer after installation of well screen and casing, due to no fault of the Contractor, will be paid for at the full applicable contract unit price for "Relief Wells (8 inch and 10 inch)". No payment will be made for placement or replacement of temporary drilling casings or repair of damage resulting from Contractor operations. No separate payment will be made for relief well screen, risers, gravel pack, grout, development, sand and concrete backfill, discharge or outlet discharge assembly. No payment will be made for any wells or drilled holes that, in the opinion of the Contracting Officer, are abandoned due to Contractor fault or neglect.

c. Unit of measure, linear foot: LF.

(3) "Pumping Test"

a. Measurement

Pumping tests will be measured for payment for each hour, measured to the nearest 15 minutes, of pumping test successfully performed as specified in SECTION 02708, and as otherwise directed by the Contracting Officer. Testing time will not include time required to place and remove testing and pumping equipment.

b. Payment

Payment for pumping test will be made at the applicable contract unit price per hour for "Pumping Test: 0006AA First 150 Hours" or "Pumping Test: 0006AB All over 150 Hours", which price and payment shall constitute full compensation for performing satisfactory pumping tests as specified in SECTION 02708. No payment will be made for pumping tests not successfully completed.

c. Unit of measure, hour: HR

(4) "Pilot Hole Boring"

a. Measurement

Pilot hole borings will be measured for payment by the linear foot of completed pilot hole between the ground surface and the specified bottom of the pilot hole boring as specified in SECTION 02708.

b. Payment

Payment will be made at the contract unit price per linear foot for "Pilot Hole Boring", which price and payment shall constitute full compensation for drilling of the pilot hole borings, taking of samples, sieve analysis tests, and the maintaining of a field boring log as specified in SECTION 02708.

c. Unit of Measure, linear foot: LF.

(5) "Guard Posts"

a. Measurement

Measurement shall be per each guard post.

b. Payment

Payment for well guard posts will be made at the contract unit price per each for "Guard Posts" which price and payment shall constitute full compensation for furnishing all plant, labor, material including concrete, and equipment for performing all operations necessary to constitute and install the guard posts as shown on the drawings and/or specified in paragraph 3.3 in SECTION 02708.

c. Unit of measure, each: EA

(6) "Corrugated Metal Pipe, 24 and 48-inch diameter CMP; 28 x 20 – inch and 42 x 29 – inch arch CMP"

a. Measurement

The culverts will be measured for payment by the linear foot. Each culvert shall be measured individually by the linear feet of culvert when two culverts are placed side by side for bidding purposes. Such measurement will be made in the field and will be based on the length installed as determined and approved by the Contracting Officer. Excavation for culverts will not be measured for payment and will be considered as an incidental cost to be included in culvert installation.

b. Payment

Payment for the culverts will be made at the unit price per linear foot for "Corrugated Metal Pipe, 24 and 48-inch diameter; 28 x 20 - inch and 42 x 29 - inch arch pipe, which price and payment shall constitute full compensation for furnishing and installing the culvert; removal of the existing culverts or wooden bridge, incidental excavation required for the installation of the new culverts; backfilling around and over the culvert; and all other operations incidental thereto; all as specified in Section 02700.

c. Unit of measure, linear feet: LF.

(7) “Riprap R 90”

a. Measurement

If the riprap material is delivered by railroad, weights as acceptable to the railroad for freight charge purposes will be accepted as measurement of the riprap material. Copies of freight bills or certifications of weights acceptable to the railroad for freight charge purposes shall be furnished. If not delivered by railroad, but delivered by truck, the riprap material will be measured for payment, in the presence of a Government Inspector unless waived by the Contracting Officer, by being weighed on approved, accurately calibrated scales furnished by and at the expense of the Contractor. Weight certificates furnished by a public weighmaster where available will be acceptable in lieu of such procedure when authorized by the Contracting Officer. Individual weight tickets shall be furnished the Government Inspector at the time of delivery.

b. Payment

Payment for riprap will be made at the applicable contract unit price per ton for "Riprap R 90”, which price and payment shall include all costs of furnishing, hauling, handling, placement, and maintaining the riprap; all as specified in SECTION 02542- STONE PROTECTION.

a. Unit of measure, ton: TN

(8) "Geotextile"

a. Measurement

Measurement shall be by the square yard.

b. Payment

Payment shall be made at the contract unit price per square yard for "Geotextile" which price and payment shall constitute full compensation to the Contractor for providing all plant, labor, material, and equipment and performing all operations necessary for the complete and satisfactory installation of the geotextile. Payment for the items listed below is included in the contract unit price for "Geotextile" and shall not be counted a second time in the process of determining the extent of geotextile placed:

(1) Material and associated equipment and operation used in laps, seams, or extra length;

(2) Securing pins and associated material, equipment, and operations;

No payment shall be made for geotextiles replaced because of contamination or damage due to Contractor fault or negligence.

c. Unit of measure, square feet: SY.

(9) "Piezometers"

c. Payment

Payment will be made at the contract unit price per linear foot for "Piezometers", which price and payement shall constitute full compensation for furnishing all material and equipment and performing all labor for installing and testing piezometers and all other operations incidental thereto, all as specified in SECTION 02710 - PIEZOMETERS. The guard posts shall be paid for under 1.2.1 (5) above.

d. Unit of measure, linear foot: LF.

PART 2 PRODUCTS (Not Used)

PART 3 EXECUTION (Not Used)

-- End of Section --

DIVISION 1 - GENERAL REQUIREMENTS

SECTION 01130

ENVIRONMENTAL PROTECTION

TABLE OF CONTENTS

PART 1 GENERAL
- 1.1 DEFINITIONS
- 1.2 ENVIRONMENTAL PROTECTION REQUIREMENTS
  - 1.2.1 Environmental Protection Plan
    - 1.2.1.1 Protection of Features
    - 1.2.1.2 Procedures
    - 1.2.1.3 Permit or License
    - 1.2.1.4 Drawings
    - 1.2.1.5 Environmental Monitoring Plans
    - 1.2.1.6 Traffic Control Plan
    - 1.2.1.7 Surface and Ground Water
    - 1.2.1.8 Work Area Plan
- 1.3 SUBCONTRACTORS
- 1.4 REGULATORY REQUIREMENTS
  - 1.4.1 Permits

PART 2 PRODUCTS (Not Applicable)

PART 3 EXECUTION
- 3.1 PROTECTION OF ENVIRONMENTAL RESOURCES
  - 3.1.1 Protection of Land Resources
    - 3.1.1.1 Work Area Limits
    - 3.1.1.2 Protection of Landscape
    - 3.1.1.3 Reduction of Exposure of Unprotected Erodible Soils
    - 3.1.1.4 Temporary Protection of Disturbed Areas
    - 3.1.1.5 Erosion and Sedimentation Control Devices
    - 3.1.1.6 Location of Contractor Facilities
    - 3.1.1.7 Borrow Areas Provided by the Government
    - 3.1.1.8 Disposal Areas
    - 3.1.1.9 Temporary Excavation and Embankments

3.1.1.10 Disposal of Solid Wastes
3.1.1.11 Disposal of Chemical Wastes
3.1.1.12 Disposal of Discarded Materials
3.2 HISTORICAL, ARCHAEOLOGICAL AND CULTURAL RESOURCES
3.3 PROTECTION OF WATER RESOURCES
3.3.1 Cofferdam and Diversion Operations
3.3.2 Stream Crossings
3.3.3 Monitoring of Water Areas Affected by Construction Activities
3.4 PROTECTION OF FISH AND WILDLIFE RESOURCES
3.5 PROTECTION OF AIR RESOURCES
3.5.1 Particulates
3.5.2 Hydrocarbons and Carbon Monoxide
3.5.3 Odors
3.5.4 Monitoring Air Quality
3.6 INSPECTION
3.7 POST CONSTRUCTION CLEANUP
3.8 RESTORATION OF LANDSCAPE DAMAGE
3.9 MAINTENANCE OF POLLUTION FACILITIES
3.10 TRAINING OF CONTRACTOR PERSONNEL IN POLLUTION CONTROL
3.11 REPORTING OF POLLUTION SPILLS

SECTION 01130

ENVIRONMENTAL PROTECTION

PART 1 GENERAL

1.1 DEFINITIONS

For the purpose of this specification, environmental pollution and damage is defined as the presence of chemical, physical, or biological elements or agents which adversely affect human health or welfare; unfavorably alter ecological balances of importance to human life; affect other species of importance to man; or degrade the utility of the environment for aesthetic, cultural and/or historical purposes. The control of environmental pollution and damage requires consideration of air, water, and land, and includes management of visual aesthetics, noise, solid waste, radiant energy and radioactive materials, as well as other pollutants.

1.2 ENVIRONMENTAL PROTECTION REQUIREMENTS

Provide and maintain, during the life of the contract, environmental protection. Plan for and provide environmental protective measures to control pollution that develops during normal construction practice. Plan for and provide environmental protective measures required to correct conditions that develop during the construction of permanent or temporary environmental features associated with the project. Comply with Federal, State, and Local regulations pertaining to the environment, including but not limited to water, air, and noise pollution.

1.2.1 Environmental Protection Plan

Within 15 days after receipt of Notice of Award of the contract, the Contractor shall submit, in writing, an Environmental Protection Plan. Prior to starting work, the Contractor shall meet with representatives of the Contracting Officer to develop mutual understanding relative to compliance with this provision and administration of the environmental protection program. Approval of the Contractor's plan will not relieve the Contractor of his/her responsibility for adequate and continuing control of pollutants and other environmental protection measures. The Government reserves the right to make changes in his/her environmental protection plan and operations as necessary to maintain satisfactory environmental protection performance. The Environmental Protection Plan shall include but not be limited to the following:

1.2.1.1 Protection of Features

The Contractor shall determine methods for the protection of features to be preserved within authorized work areas. The Contractor shall prepare a listing of methods to protect resources needing protection, i.e., trees, shrubs, vines, grasses and ground cover, landscape features, air and water quality, fish and wildlife, soil, historical, archaeological and cultural resources.

1.2.1.2 Procedures

The Contractor shall implement procedures to provide the required environmental protection and to comply with the applicable laws and regulations. The Contractor shall set out the procedures to be followed to correct pollution of the environment due to accident, natural causes or failure to follow the procedures setout in accordance with the Environmental Protection Plan.

1.2.1.3 Permit or License

The Contractor shall obtain all needed permits or licenses.

1.2.1.4 Drawings

The Contractor shall include drawings showing locations of any proposed temporary excavations or embankments for haul roads, stream crossings, material storage areas, structures, sanitary facilities, stockpiles of earth materials, and disposal areas for excess earth material and unsatisfactory earth materials.

1.2.1.5 Environmental Monitoring Plans

The Contractor shall include environmental monitoring plans for the jobsite which incorporate land, water, air and noise monitoring.

1.2.1.6 Traffic Control Plan

The Contractor shall include a traffic control plan for the jobsite.

1.2.1.7 Surface and Ground Water

The Contractor shall establish and install methods of protecting surface and ground water during construction activities.

1.2.1.8 Work Area Plan

The Contractor shall include a work area plan showing the proposed activity in each portion of the area and identifying the areas of limited use or nonuse. The plan shall include measures for marking the limits of use areas.

1.3 SUBCONTRACTORS

Assurance of compliance with this section by subcontractors will be the responsibility of the Contractor.

1.4 REGULATORY REQUIREMENTS

The Contractor shall comply with all State regulatory and statutory requirements.

1.4.1 Permits

This section supplements the Contractor's responsibility under the contract clause PERMITS AND RESPONSIBILITIES to the extent that the Government has already obtained some environmental permits. The Government has obtained permits for erosion control (SWPPP) and water quality certification for deposition into wetlands (Section 404). The Contractor shall comply with the terms and conditions of these permits. These conditions have been incorporated into these specifications. The Contractor shall obtain all other needed permits or licenses.

PART 2 PRODUCTS (Not Applicable)

PART 3 EXECUTION

3.1 PROTECTION OF ENVIRONMENTAL RESOURCES

The environmental resources within the project boundaries and those affected outside the limits of permanent work under this contract shall be protected during the entire period of this contract. The Contractor shall confine his/her activities to areas defined by the contract drawings or specifications. Environmental protection shall be as stated in the following subparagraphs.

3.1.1 Protection of Land Resources

Prior to the beginning of any construction, the Contracting Officer will identify all land resources to be preserved within the Contractor's work area. The Contractor shall not remove, cut, deface, injure, or destroy land resources including trees, shrubs, vines, grasses, topsoil, and land forms without special permission from the Contracting Officer. No ropes, cables, or guys shall be fastened to or attached to any trees for anchorage unless specifically authorized. Where such special emergency use is permitted, the Contractor shall provide effective protection for land and vegetation resources at all times as defined in the following subparagraphs.

3.1.1.1 Work Area Limits

Prior to any construction, the Contractor shall mark the areas where no work is to be performed under this contract. Isolated areas within the general work area which are to be saved and protected shall also be marked or fenced. Monuments and markers shall be protected before construction operations commence and during all construction operations. Where construction operations are to be conducted during darkness, the markers shall be visible during darkness. This contract, however, does not allow nighttime work. The Contractor shall convey to his/her personnel the purpose of marking and/or protection of all necessary objects.

3.1.1.2 Protection of Landscape

Trees, shrubs, vines, grasses, land forms and other landscape features to be preserved, indicated and defined on the drawings submitted by the Contractor as a part of the Environmental Protection Plan, shall be clearly identified by marking, fencing, or wrapping with boards, or any other approved techniques.

3.1.1.3 Reduction of Exposure of Unprotected Erodible Soils

Earthwork brought to final grade shall be finished as indicated and specified. Side slopes and back slopes shall be protected as soon as practicable upon completion of rough grading. All earthwork shall be planned and conducted to minimize the duration of exposure of unprotected soils. Except in instances where the constructed feature obscures borrow areas, quarries and waste material areas; these areas shall not initially be cleared in total. Clearing of such areas shall progress in reasonably sized increments as needed to use the areas as approved by the Contracting Officer.

3.1.1.4 Temporary Protection of Disturbed Areas

Such methods as necessary shall be utilized to effectively prevent erosion and control sedimentation, including but not limited to the following:

Retardation and Control of Runoff

Runoff from the construction site shall be controlled by construction of diversion ditches, benches, and berms to retard and divert runoff to protected drainage courses, and the Contractor shall also utilize any measures required by area-wide plans approved under Paragraph 208 of the Clean Water Act.

3.1.1.5 Erosion and Sedimentation Control Devices

The Contractor shall construct or install all temporary and permanent erosion

sedimentation control features. Temporary erosion and sediment control measures such as berms, dikes, drains, sedimentation basin, grassing and mulching shall be maintained until permanent drainage and erosion control facilities are completed and operable.

3.1.1.6 Location of Contractor Facilities

The Contractor's field offices, staging areas, stockpiles, storage, and temporary buildings shall be placed in areas approved by the Contracting Officer. Temporary movement or relocation of Contractor facilities shall be made only on approval by the Contracting Officer.

3.1.1.7 Borrow Areas Provided by the Government

Borrow areas provided by the Government shall be managed to minimize erosion and to prevent sediment from entering nearby water courses or lakes.

3.1.1.8 Disposal Areas

There are no disposal areas designated for this contract. All debris shall either be removed from the site of the work, or shall be disposed of by burning. See SECTION 02114 with regard to the disposal of cleared debris. Compliance with all Federal, State, and Local laws and ordinances is compulsory.

3.1.1.9 Temporary Excavation and Embankments

Temporary excavation and embankments shall be controlled to protect adjacent areas from contamination.

3.1.1.10 Disposal of Solid Wastes

Solid wastes (excluding clearing debris) shall be placed in containers, which are emptied on a regular schedule. All handling and disposal shall be conducted to prevent contamination. The Contractor shall transport all solid waste off Government property and dispose of it in compliance with Federal, State, and local requirements for solid waste disposal.

3.1.1.11 Disposal of Chemical Wastes

Chemical wastes shall be stored in corrosion resistant containers, removed from the work area and disposed of in accordance with Federal, State, and Local regulations.

3.1.1.12 Disposal of Discarded Materials

Discarded materials, other than those that can be included in the solid waste category, shall be handled as directed by the Contracting Officer.

3.2 HISTORICAL, ARCHAEOLOGICAL AND CULTURAL RESOURCES

Existing historical, archaeological and cultural resources within the Contractor's work area will be so designated by the Contracting Officer and precautions shall be taken by the Contractor to preserve all such resources, as they existed at the time they were pointed-out to the Contractor. The Contractor shall install all protection for these resources so designated on the contract drawings and shall be responsible for their preservation during this contract. If during construction items of apparent archaeological or historical interest are discovered, they shall be left undisturbed and the Contractor shall report the find immediately to the Contracting Officer.

3.3 PROTECTION OF WATER RESOURCES

The Contractor shall keep construction activities under surveillance, management and control to avoid pollution of surface and ground waters. Special management techniques as set out below shall be implemented to control water pollution by the listed construction activities, which are included in this contract.

3.3.1 Cofferdam and Diversion Operations

The Contractor shall plan his/her operations and perform all work necessary to minimize adverse impact or violation of the water quality standard. Construction operations for dewatering, removal of cofferdams, tailrace excavation, and tunnel closure shall be controlled at all times to limit impact of water turbidity on the habitat for wildlife and impacts on water quality for downstream use.

3.3.2 Stream Crossings

Stream crossings shall be controlled during construction. Crossings shall not violate water pollution control standards of the Federal, State or Local government.

3.3.3 Monitoring of Water Areas Affected by Construction Activities

Monitoring of water areas affected by construction activities shall be the responsibility of the Contractor. The Contractor shall monitor all water areas affected by construction activities.

3.4 PROTECTION OF FISH AND WILDLIFE RESOURCES

The Contractor shall keep construction activities under surveillance, management and control to

minimize interference with, disturbance to and damage of fish and wildlife. The Contractor, prior to beginning of construction operations, shall list species that require specific attention on his/her Environmental Protection Plan, along with measures for their protection.

3.5 PROTECTION OF AIR RESOURCES

The Contractor shall keep construction activities under surveillance, management and control to minimize pollution of air resources. All activities, equipment, processes, and work operated or performed by the Contractor in accomplishing the specified construction shall be in strict accordance with the laws of the State or States in which the work is being performed and all Federal emission and performance laws and standards. Special management techniques as set out below shall be implemented to control air pollution by the construction activities, which are included in the contract. In the event that air pollution occurs due to the Contractors actions, the Contractor shall take all necessary steps to rectify the situation to the satisfaction of the Contracting Officer.

3.5.1 Particulates

Dust particles, aerosols, gaseous by-products from all construction activities, processing and preparation of materials, such as from asphaltic batch plants, shall be controlled at all times, including weekends, holidays and hours when work is not in progress. The Contractor shall maintain all excavations, stockpiles, haul roads, permanent and temporary access roads, plant sites, areas of excess excavated material disposal areas, borrow areas, and all other work areas within or outside the project boundaries free from particulates which would cause the air pollution standards mentioned in the paragraph "PROTECTION OF AIR RESOURCES" to be exceeded or which would cause a hazard or a nuisance. Sprinkling, chemical treatment of an approved type, light bituminous treatment, baghouse, scrubbers, electrostatic precipitators or other methods will be permitted to control particulates in the work area. Sprinkling, to be efficient, must be repeated at such intervals as to keep the disturbed area damp at all times. The Contractor must have sufficient equipment available to accomplish this task. Particulate control shall be performed as the work proceeds and whenever a particulate nuisance or hazard occurs.

3.5.2 Hydrocarbons and Carbon Monoxide

Hydrocarbons and carbon monoxide emissions from equipment shall be controlled to Federal, State, and/or Local allowable limits at all times.

3.5.3 Odors

Odors shall be controlled at all times for all construction activities, processing and preparation of materials.

3.5.4 Monitoring Air Quality

Monitoring of air quality shall be the responsibility of the Contractor. The Contractor shall monitor all air areas affected by the construction activities.

3.6 INSPECTION

The Contracting Officer will notify the Contractor in writing of any observed noncompliance with the Contractor's Environmental Protection Plan. The Contractor shall, after receipt of such notice, inform the Contracting Officer of proposed corrective actions and take such actions as may be approved. If the Contractor fails to comply promptly, the Contracting Officer may issue an order stopping all or part of the work until satisfactory corrective actions have been taken. No time extensions will be granted or costs or damages allowed to the Contractor for any such suspension.

3.7 POST CONSTRUCTION CLEANUP

The Contractor shall clean up all area(s) used for construction.

3.8 RESTORATION OF LANDSCAPE DAMAGE

The Contractor shall restore all landscape features damaged or destroyed during construction operations both inside and outside of the limits of the approved work areas. Such restoration shall be in accordance with the plans submitted for approval by the Contracting Officer.

3.9 MAINTENANCE OF POLLUTION FACILITIES

The Contractor shall maintain all constructed facilities and temporary pollution control devices for the duration of the contract or for that length of time construction activities create the particular pollutant.

3.10 TRAINING OF CONTRACTOR PERSONNEL IN POLLUTION CONTROL

The Contractor shall train his/her personnel in all phases of environmental protection. The training shall include methods of detecting and avoiding pollution, familiarization with pollution standards, both statutory and contractual, and installation and care of facilities (vegetative covers and instruments required for monitoring purposes) to insure adequate and continuous environmental pollution control.

3.11 REPORTING OF POLLUTION SPILLS

In the event that an oil spill or chemical release occurs during the performance of this contract, the Contractor is required to contact the National Response Center, telephone number 1-800-424-8802 as soon as possible, or if telephone communication is not possible, the nearest Missouri Dept of Environmental Quality office may be contacted by radio to report the spill, (33 CFR 153.203). The Contractor shall comply with any instructions from the responding agency concerning containment and/or cleanup of spills.

-- End of Section --

DIVISION 1 - GENERAL REQUIREMENTS

SECTION 01330

SUBMITTAL PROCEDURES

TABLE OF CONTENTS

PART 1 GENERAL

1.1 SUBMITTAL CLASSIFICATION
1.1.1 Government Approved
1.1.2 For Information Only
1.2 APPROVED SUBMITTALS
1.3 DISAPPROVED SUBMITTALS
1.4 WITHHOLDING OF PAYMENT

PART 2 PRODUCTS (NOT APPLICABLE)

PART 3 EXECUTION
3.1 GENERAL
3.2 SUBMITTAL REGISTER (ENG FORM 4288R)
3.3 SCHEDULING
3.4 TRANSMITTAL FORM (ENG FORM 4025R)
3.5 SUBMITTAL PROCEDURE
3.5.1 Procedures
3.5.2 Deviations
3.6 CONTROL OF SUBMITTALS
3.7 GOVERNMENT APPROVED SUBMITTALS
3.8 INFORMATION ONLY SUBMITTALS
3.9 STAMPS

SECTION 01330

SUBMITTAL PROCEDURES

PART 1 GENERAL

1.1 SUBMITTAL CLASSIFICATION

Submittals are identified with submittal description (SD) numbers and are classified as follows:

1.1.1 Government Approved

Governmental approval is required for extensions of design, critical materials, deviations, equipment whose compatibility with the entire system must be checked, and other items as designated by the Contracting Officer. Within the terms of the Contract Clause entitled "Specifications and Drawings for Construction," they are considered to be "shop drawings."

These items are tagged GA/AE or GA/RE in the submittal register.

The designer of record approves GA/AE review materials. This is usually an architectural-engineering design firm hired by the construction contractor. The Corps of Engineers construction resident engineer approves GA/RE review materials. This is usually a group of engineers who work for the installation’s resident engineer.

1.1.2 For Information Only (FIO)

All submittals not requiring Government approval will be for information only. These items are tagged FIO in the submittal register. They are not considered to be "shop drawings" within the terms of the Contract Clause referred to above.

1.2 APPROVED SUBMITTALS

The Contracting Officer's approval of submittals shall not be construed as a complete check, but will indicate only that the general method of construction, materials, detailing and other information are satisfactory.

Approval will not relieve the Contractor of the responsibility for any error, which may exist, as the Contractor under the CQC requirements of this contract is responsible for dimensions, the design of adequate connections and details, and the satisfactory construction of all work.

After submittals have been approved by the Contracting Officer, no re-submittal for the purpose of substituting materials or equipment will be considered unless accompanied by an explanation of why a substitution is necessary.

1.3 DISAPPROVED SUBMITTALS

The Contractor shall make all corrections required by the Contracting Officer and promptly furnish a corrected submittal in the form and number of copies specified for the initial submittal.

If the Contractor considers any correction indicated on the submittals to constitute a change to the contract, a notice in accordance with the Contract Clause "Changes" shall be given promptly to the Contracting Officer.

1.4 WITHHOLDING OF PAYMENT

Payment for materials incorporated in the work will not be made if required approvals have not been obtained.

PART 2 PRODUCTS (NOT APPLICABLE)

PART 3 EXECUTION

3.1 GENERAL

The Contractor shall make submittals as required by the specifications. The Contracting Officer may request submittals in addition to those specified when deemed necessary to adequately describe the work covered in the respective sections. Units of weights and measures used on all submittals shall be the same as those used in the contract drawings. Each submittal shall be complete and in sufficient detail to allow ready determination of compliance with contract requirements.

Prior to submittal, all items {GA and FIO} shall be checked and approved by the Contractor's Quality Control (CQC) representative and each item shall be stamped, signed, and dated by the CQC representative indicating action taken.

Proposed deviations from the contract requirements shall be clearly identified.

Submittals shall include items such as: Contractor's, manufacturer's, or fabricator's drawings; descriptive literature including (but not limited to) catalog cuts, diagrams, operating charts or curves; test reports; test cylinders; samples; O&M manuals (including parts list); certifications; warranties; and other such required submittals.

Submittals requiring Government approval shall be scheduled and made prior to the acquisition of the material or equipment covered thereby.

Samples remaining upon completion of the work shall be picked up and disposed of in accordance with manufacturer's Material Safety Data Sheets (MSDS) and in compliance with existing laws and regulations.

3.2 SUBMITTAL REGISTER (ENG FORM 4288)

At the end of this section is one set of ENG Form 4288 listing items of equipment and materials for which submittals are required by the specifications; this list may not be all-inclusive and additional submittals may be required.

The Contractor will also be given the submittal register as a diskette containing the computerized ENG Form 4288 and instructions on the use of the diskette. Columns "d" through "r" have been completed by the Government; the Contractor shall complete columns "a" and "s" through "u" and submit the forms (hard copy plus associated electronic file) to the Contracting Officer for approval within 30 calendar days after Notice to Proceed.

The Contractor shall keep this diskette up-to-date and shall submit it to the Government together with the monthly payment request. The approved submittal register will become the scheduling document and will be used to control submittals throughout the life of the contract.
The submittal register and the progress schedules shall be coordinated.

3.3 SCHEDULING

Submittals covering component items forming a system or items that are interrelated shall be scheduled to be coordinated and submitted concurrently.

All submittals for all interior finishes (wall, floor, ceiling), all base, casework, toilet partitions, window treatments and all other similar items requiring coordinated color selection shall be submitted concurrently. Certifications to be submitted with the pertinent drawings shall be so scheduled.

The contractor shall allow 30 calendar days, exclusive of mailing time, and this period shown on the submittal register and NAS schedule for submittals requiring Government review and approval.

No delay damages or time extensions will be allowed for time lost in late submittals or resubmittals.

An additional 10 calendar days shall be allowed and shown on the register and NAS schedule for the review and approval of submittals for food service equipment and refrigeration and HVAC control systems.

3.4 TRANSMITTAL FORM (ENG FORM 4025)

The sample transmittal form (ENG Form 4025) attached to this section shall be used for submitting both Government approved and for information only submittals in accordance with the instructions on the reverse side of the form. These forms will be furnished to the Contractor. This form shall be properly completed by filling out all the heading blank spaces and identifying each item submitted.

Special care shall be exercised to ensure proper listing of the specification paragraph and/or sheet number of the contract drawings pertinent to the data submitted for each item.

3.5 SUBMITTAL PROCEDURE

Submittals shall be made as follows:

3.5.1 Procedures

The Contractor shall be responsible for the scheduling and control of all submittals.

The Contractor is responsible for confirming that the submittal register includes all submittals required by the contract documents.

In addition to those items listed on ENG Form 4288, the Contractor will furnish submittals for any deviation from the plans or specifications. The scheduled need dates must be recorded on the document for each item for control purposes and critical items must be tied to the contractor's approved schedule where applicable.

The Contractor will submit to the Contracting Officer for approval five (5) copies of all G/AE or G/RE level and for all FIO level submittals. This number of copies of submittals specified in this portion of the contract shall be as specified in lieu of the number as specified by FAR 52.236-21.

For those contracts requiring project schedule--Network Analysis System (NAS), the Contractor will schedule on the NAS, critical or key items of material or equipment which the procurement activities will, or have the potential to, significantly impact project critical path and completion. The list of key or critical items of material or equipment shall be submittal approved by the Contracting Officer. See attachment to Section 0800 for NAS scheduling requirements.

Where ENG Form 4025 must be submitted prior to approval of the Construction Progress Schedule, the Contractor shall submit an initial annotated ENG Form 4288 upon which dates for submittal, approval and delivery of procurement items shall be included for the first 60 days of the work.

Upon approval of the Construction Progress Schedule, or no later than 60 days after Notice to Proceed, the Contractor shall submit final annotated copies of ENG Form 4288-Submittal Register. Dates shall be coordinated with the approved Construction Progress Schedule to logically interface with the sequence of construction. Critical item numbers will be shown on the listing if NAS is required.

Furnishing the schedule shall not be interpreted as relieving the Contractor of his obligation to comply with all the specification requirements for the items on the schedule.

Contractor's Quality Control representative shall review the listing at least every 30 days and take appropriate action to maintain an effective system.

The Contractor shall furnish a list each 30 days of all submittals on which either Government's or Contractor's action is past due. This monthly list of delayed items shall also be annotated by the Contractor to show what corrective action he is taking with regard to slippages in submittal schedule that are attributable to actions by him, his subcontractors, or suppliers.

The Contractor shall provide updated submittal register data, electronically or on floppy disk, to the contracting Officer, monthly, indicating the current status and codes of all submittals in order update the master submittal register maintained by the Contracting Officer and to assure that the contractor’s schedule is being maintained.

He shall also furnish revised due dates in those cases when the original submittal schedule is no longer realistic.

The Contractor shall certify that each submittal is correct and in strict conformance with the contract drawings and specifications. All submittals not subject to the approval of the Contracting Officer will be submitted for Information purposes only, (FIO).

No Corps of Engineers action will be required for FIO submittals prior to incorporating these items into the work, but the submittal shall be furnished to the Area/Resident Engineer not less than 2 weeks prior to procurement of Contractor certified material, equipment, etc.

These Contractor approved submittals (FIO), will be used to verify that material received and used in the job is the same as that described and approved and will be used as record copies.

All samples of materials submitted as required by these specifications shall be properly identified and labeled for ready identification, and upon being certified by the Contractor and reviewed by the Contracting Officer, shall be stored at the site of the work for job site use until all work has been completed and accepted by the Contracting Officer.

Delegation of this approval authority to Contractor Quality Control does not relieve the Contractor from the obligation to conform to any contract requirement and will not prevent the Contracting Officer from requiring removal and replacement of construction not in contract conformance; nor does it relieve the Contractor from the requirement to furnish "samples" for testing by the Government Laboratory or check testing by the Government in those instances where the technical specifications so prescribe.

Contractor certified drawings will be subject to quality assurance review by the Government at any time during the duration of the contract.

No adjustment for time or money will be allowed for corrections required as a result of noncompliance with plans and specifications.

Submittals Requiring Government Approval (G/AE Level or G/RE Level). Where the review authority is designated to the Government, the Contractor is required to sign the certification on

ENG Form 4025 in the box beside the remarks block in Section I. The Government will code the items in block h and sign the approval action block in Section II as the approving authority.

Operating and Maintenance Instructions. Six (6) complete sets of instructions containing the manufacturer's operating and maintenance instructions for each piece of equipment shall be furnished. Each set shall be permanently bound and shall have a hard cover.

One (1) complete set shall be furnished at the time test procedures are submitted.

Remaining sets shall be furnished to the Contracting Officer on the date of final/acceptance inspection of the project. The following identification shall be inscribed on the covers: The words "OPERATING AND MAINTENANCE INSTRUCTIONS," name and location of the facility, name of the Contractor, and contract number. Flysheets shall be placed before instructions covering each subject. Instruction sheets shall be approximately 8-1/2 by 11 inches, with large sheets of drawings folded in. Instructions shall include but are not limited to:

(1) System layout showing piping, valves and controls;

(2) Approved wiring and control diagrams;

(3) A control sequence describing startup, operation and shutdown;

(4) Operating and maintenance instructions for each piece of equipment, including lubrication instructions and troubleshooting guide; and

(5) Manufacturer’s bulletins, cuts and descriptive data; parts lists and recommended parts.

3.5.2 Deviations

For submittals, which include proposed deviations requested by the Contractor, the column "variation" of ENG Form 4025 shall be checked. The Contractor shall set forth in writing the reason for any deviations and annotate such deviations on the submittal.

The Government reserves the right to rescind inadvertent approval of submittals containing unnoted deviations.

The contractor is not authorized to take action on an approved deviation until the deviation is included in a final contract modification.

3.6 CONTROL OF SUBMITTALS

The Contractor shall carefully control his procurement operations to ensure that each individual submittal is made on or before the Contractor scheduled submittal date shown on the approved "Submittal Register."

3.7 GOVERNMENT APPROVED SUBMITTALS

Upon completion of review of submittals requiring Government approval, the submittals will be identified as having received approval by being so stamped and dated.

Three (3) copies of the GA submittals will be retained by the Contracting Officer and two (2) copies of the submittal will be returned to the Contractor-within the time specified-with action code.

Submittals requiring re-submittal to the Government are due immediately upon receipt by the contractor to avoid contractor delay to the project.

3.8 INFORMATION ONLY SUBMITTALS

Three (3) copies of the submittal will be retained by the Contracting Officer and two (2) copies returned to the contractor.

Not all FIO submittals will be reviewed by the Government. This Government review will be a quality assurance review only of a sample of the entire number of submittals. Approval of the Contracting Officer is not required on information only submittals. The Government reserves the right to require the Contractor to resubmit any item found not to comply with the contract. This does not relieve the Contractor from the obligation to furnish material conforming to the plans and specifications; will not prevent the Contracting Officer from requiring removal and replacement of nonconforming material incorporated in the work; and does not relieve the Contractor of the requirement to furnish samples for testing by the Government laboratory or for check testing by the Government in those instances where the technical specifications so prescribe.

FIO submittals noted for re-submittal to the Government for clarification or additional data are due immediately upon receipt by the contractor.

3.9 STAMPS

Stamps used by the Contractor on the submittal data to certify that the submittal meets contract requirements shall be similar to the following:

CONTRACTOR

(Firm Name)

_____ Approved

_____ Approved with corrections as noted on submittal data and/or attached sheets(s).

SIGNATURE:_____

TITLE:_____

DATE:_____

--End of Section--

TRANSMITTAL OF SHOP DRAWINGS, EQUIPMENT DATA, MATERIAL SAMPLES OR MANUFACTURE'S CERTIFICATES OF COMPLIANCE (Read instructions on the reverse side prior to initiating this form)	DATE	TRANSMITTAL NO.

SECTION I - REQUEST FOR APPROVAL OF THE FOLLOWING ITEMS (This section will be initiated by the contractor)

TO:	FROM	CONTRACT NO.	CHECK ONE: [ ] THIS IS A NEW TRANSMITTAL [ ] THIS IS A RESUBMITTAL OF TRANSMITTAL _____

SPECIFICATION SECT. NO. (Cover only one section with each transmittal)	PROJECT TITLE AND LOCATION	CHECK ONE: THIS TRANSMITTAL IS FOR [ ] FIO [ ] GOV"T APPROVAL

ITEM NO.	DESCRIPTION OF ITEM SUBMITTED (Type size, model number/etc.)	MFG OR CONTR. CAT., CURVE DRAWING OR BROCHURE NO. (See instruction no. 8)	NO. OF COPIES	CONTRACT REFERENCE DOCUMENT		FOR CONTRACTOR USE CODE	VARIATION (See Instruction No. 6)	FOR CE USE CODE
				SPEC. PARA NO.	DRAWING SHEET NO.			
a.	b.	c.	d.	e.	f.	g.	h.	i.

REMARKS	I certify that the above submitted items have been reviewed in detail and are correct and in strict conformance with the contract drawings and specifications except as otherwise stated. _____ NAME AND SIGNATURE OF CONTRACTOR

SECTION II - APPROVAL ACTION

ENCLOSURE RETURNED (Listed by Item No.)	NAME, TITLE AND SIGNATURE OF APPROVING AUTHORITY	DATE

1. Section 1 will be initiated by the Contractor in the required number of copies.

2. Each transmittal shall be numbered consecutively in the space provided for "Transmittal No.". This number, in addition to the contract number, will form a serial number for identifying each submittal. For new submittals or resubmittals, mark the appropriate box; on resubmittals, insert transmittal number of last submission as well as the new submittal number.

3. The "Item No." will be the same "Item No." as indicated on ENG FORM 4288 for each entry on this form.

4. Submittals requiring expeditious handling will be submitted on a separate form.

5. Separate transmittal form will be used for submittals under separate sections of the specifications.

6. A check shall be placed in the "Variation" column when a submittal is not in accordance with the plans and specifications – also, a written statement to that effect shall be included in the space provided for "Remarks".

7. Form is self-transmittal, letter of transmittal is not required.

8. When a sample of material or Manufacturer's Certificate of Compliance is transmitted, indicate "Sample" or "Certificate" in column c, Section I.

9. U.S. Army Corps of Engineers approving authority will assign action codes as indicated below in space provided in Section I, column i to each item submitted. In addition they will ensure enclosures are indicated and attached to the form prior to return to the contractor. The Contractor will assign action codes as indicated below in Section I, column g, to each item submitted.

THE FOLLOWING ACTION CODES ARE GIVEN TO ITEMS SUBMITTED

A -- Approved as submitted.

B -- Approved, except as noted on drawings.

C -- Approved, except as noted on drawings. Refer to attached sheet resubmission required.

D -- Will be returned by separate correspondence.

E -- Disapproved (See attached).

F -- Receipt acknowledge.

FX -- Receipt acknowledged, does not comply as noted with contract requirements.

G -- Other *(Specify)*

10. Approval of items does not relieve the contractor from complying with all the requirements of the contract plans and specifications.

SUBMITTAL REGISTER
(ER 415-1-10)

CONTRACT NO.

TITLE AND LOCATION: Nash Relief Wells - Parcel No. 2, Collector and Outlet Ditches
Cape Girardeau County, Missouri

CONTRACTOR

SPECIFICATION SECTION: 02710 (Piezometers)

ACTIVITY NO. a	TRANS-MITTAL NO. b	ITEM NO. c	SPECIFICATION PARAGRAPH NUMBER d	DESCRIPTION OF ITEM SUBMITTED e	TYPE OF SUBMITTAL: DATA f	DRAWINGS g	INSTRUCTIONS h	SCHEDULES i	STATEMENTS j	REPORTS k	CERTIFICATES l	SAMPLES m	RECORDS n	CLASSI-FICATION: INFORMATION ONLY o	GOVERNMENT APPROVED p	REVIEWER q	CONTRACTOR SCHEDULE DATES: SUBMIT r	APPROVAL NEEDED BY s	MATERIAL NEEDED BY t	CONTRACTOR ACTION: CODE u	DATE v	SUBMIT TO GOVERN-MENT w	GOVERNMENT ACTION: CODE x	DATE y	REMARKS z
			1.2	Quality Contorl	X					X				X		C									

SUBMITTAL REGISTER
(ER 415-1-10)

CONTRACT NO.

TITLE AND LOCATION: Nash Relief Wells - Parcel No. 2, Collector and Outlet Ditches
Cape Girardeau County, Missouri

CONTRACTOR

SPECIFICATION SECTION: 02708 (Relief Wells)

ACTIVITY NO. a	TRANS-MITTAL NO. b	ITEM NO. c	SPECIFICATION PARAGRAPH NUMBER d	DESCRIPTION OF ITEM SUBMITTED e	TYPE OF SUBMITTAL: DATA f	DRAWINGS g	INSTRUCTIONS h	SCHEDULES i	STATEMENTS j	REPORTS k	CERTIFICATES l	SAMPLES m	RECORDS n	CLASSI-FICATION: INFORMATION ONLY o	GOVERNMENT APPROVED p	REVIEWER q	CONTRACTOR SCHEDULE DATES: SUBMIT r	APPROVAL NEEDED BY s	MATERIAL NEEDED BY t	CONTRACTOR ACTION: CODE u	DATE v	SUBMIT TO GOVERN-MENT w	GOVERNMENT ACTION: CODE x	DATE y	REMARKS z
			1.2 (5)	Reports (each well)						X				X		C									
			1.2 (6)	Licenses & Permits							X			X		C									
			3.1.1	Shop Drawings		X									X	C									
			3.1.2	Well Survey Information	X										X	C									
			3.3.2	Drillinf Fluid					X						X	C									
			3.2.6	Boring Logs (WES 650)									X	X		C									
			3.2.6	Lab-Data - Gradation Curves	X										X	C									
			3.8.3	Shop Drawings - Surge Block		X									X	C									
			3.10.2.4	Sand Infiltration Test Report									X	X		C									
			3.10.3	Pumping Test Report (WES 796)									X	X		C									
			3.10.5	Relief Well Installation Report									X	X		C									

SUBMITTAL REGISTER
(ER 415-1-10)

CONTRACT NO.

TITLE AND LOCATION: Nash Relief Wells - Parcel No. 2, Collector and Outlet Ditches
Cape Girardeau County, Missouri

CONTRACTOR

SPECIFICATION SECTION: 02700 (Culvert Installations)

ACTIVITY NO. a	TRANS-MITTAL NO. b	ITEM NO. c	SPECIFICATION PARAGRAPH NUMBER d	DESCRIPTION OF ITEM SUBMITTED e	TYPE OF SUBMITTAL: DATA f	DRAWINGS g	INSTRUCTIONS h	SCHEDULES i	STATEMENTS j	REPORTS k	CERTIFICATES l	SAMPLES m	RECORDS n	CLASSIFICATION: INFORMATION ONLY o	GOVERNMENT APPROVED p	REVIEWER q	CONTRACTOR SCHEDULE DATES: SUBMIT r	APPROVAL NEEDED BY s	MATERIAL NEEDED BY t	CONTRACTOR ACTION: CODE u	DATE v	SUBMIT TO GOVERN-MENT w	GOVERNMENT ACTION: CODE x	DATE y	REMARKS z
			2.1	Certified Statement					X		X			X		C									
			2.1.1	Certified Statement					X		X			X		C									
			2.1.1	Certificate					X		X			X		C									

SUBMITTAL REGISTER
(ER 415-1-10)

CONTRACT NO.

TITLE AND LOCATION: Nash Relief Wells - Parcel No. 2, Collector and Outlet Ditches
Cape Girardeau County, Missouri

CONTRACTOR

SPECIFICATION SECTION: 02546 (Aggregate Surfacing)

ACTIVITY NO. a	TRANS-MITTAL NO. b	ITEM NO. c	SPECIFICATION PARAGRAPH NUMBER d	DESCRIPTION OF ITEM SUBMITTED e	TYPE OF SUBMITTAL: DATA f	DRAWINGS g	INSTRUCTIONS h	SCHEDULES i	STATEMENTS j	REPORTS k	CERTIFICATES l	SAMPLES m	RECORDS n	CLASSIFICATION: INFORMATION ONLY o	GOVERNMENT APPROVED p	REVIEWER q	CONTRACTOR SCHEDULE DATES: SUBMIT r	APPROVAL NEEDED BY s	MATERIAL NEEDED BY t	CONTRACTOR ACTION: CODE u	DATE v	SUBMIT TO GOVERN-MENT w	GOVERNMENT ACTION: CODE x	DATE y	REMARKS z
			2.2.1	Samples								X		X		C									
			2.2.2	Certified Results of Test							X			X		C									

SUBMITTAL REGISTER
(ER 415-1-10)

CONTRACT NO.

TITLE AND LOCATION: Nash Relief Wells - Parcel No. 2, Collector and Outlet Ditches
Cape Girardeau County, Missouri

CONTRACTOR

SPECIFICATION SECTION: 02542 (Stone Protection)

ACTIVITY NO. a	TRANS-MITTAL NO. b	ITEM NO. c	SPECIFICATION PARAGRAPH NUMBER d	DESCRIPTION OF ITEM SUBMITTED e	TYPE OF SUBMITTAL: DATA f	DRAWINGS g	INSTRUCTIONS h	SCHEDULES i	STATEMENTS j	REPORTS k	CERTIFICATES l	SAMPLES m	RECORDS n	CLASSI-FICATION: INFORMATION ONLY o	GOVERNMENT APPROVED p	REVIEWER q	CONTRACTOR SCHEDULE DATES: SUBMIT r	APPROVAL NEEDED BY s	MATERIAL NEEDED BY t	CONTRACTOR ACTION: CODE u	DATE v	SUBMIT TO GOVERN-MENT w	GOVERNMENT ACTION: CODE x	DATE y	REMARKS z
			2.1.2	Test Reports & Service Reports						X			X	X		C									
			2.2.2	Certified Test Report							X			X		C									
			2.2.2	Sample								X			X	C									
			2.2.3	Plot on Gradation or Riprap	X									X		C									

SUBMITTAL REGISTER
(ER 415-1-10)

CONTRACT NO.

TITLE AND LOCATION: Nash Relief Wells - Parcel No. 2, Collector and Outlet Ditches
Cape Girardeau County, Missouri

CONTRACTOR

SPECIFICATION SECTION: 02215 (Geotextile)

ACTIVITY NO. a	TRANS-MITTAL NO. b	ITEM NO. c	SPECIFICATION PARAGRAPH NUMBER d	DESCRIPTION OF ITEM SUBMITTED e	TYPE OF SUBMITTAL: DATA f	DRAWINGS g	INSTRUCTIONS h	SCHEDULES i	STATEMENTS j	REPORTS k	CERTIFICATES l	SAMPLES m	RECORDS n	CLASSIFICATION: INFORMATION ONLY o	GOVERNMENT APPROVED p	REVIEWER q	CONTRACTOR SCHEDULE DATES: SUBMIT r	APPROVAL NEEDED BY s	MATERIAL NEEDED BY t	CONTRACTOR ACTION: CODE u	DATE v	SUBMIT TO GOVERN-MENT w	GOVERNMENT ACTION: CODE x	DATE y	REMARKS z
			2.1.3	Samples								X		X		C									

ENG FORM 4288-R, OCT 99 EDITION OF SEP 93 IS OBSOLETE

(Proponent CEMP-CE)

SUBMITTAL REGISTER
(ER 415-1-10)

CONTRACT NO.

TITLE AND LOCATION: NASH, MISSOURI RELIEF WELLS - PARCEL NO. 2
MRL - CONSTRUCTION: CAPE GIRARDEAU COUNTY, MISSOURI

CONTRACTOR

SPECIFICATION SECTION: 02936 - Establishment of Turf

ACTIVITY NO. a	TRANS-MITTAL NO. b	ITEM NO. c	SPECIFICATION PARAGRAPH NUMBER d	DESCRIPTION OF ITEM SUBMITTED e	TYPE OF SUBMITTAL: DATA f	DRAWINGS g	INSTRUCTIONS h	SCHEDULES i	STATEMENTS j	REPORTS k	CERTIFICATES l	SAMPLES m	RECORDS n	CLASSIFICATION: INFORMATION ONLY o	GOVERNMENT APPROVED p	REVIEWER q	CONTRACTOR SCHEDULE DATES: SUBMIT r	APPROVAL NEEDED BY s	MATERIAL NEEDED BY t	CONTRACTOR ACTION: CODE u	DATE v	SUBMIT TO GOVERN-MENT w	GOVERNMENT ACTION: CODE x	DATE y	REMARKS z
			1.2	RECORDS AND TESTS									X	X		C									
			2.1.1	CERTIFIED WEIGHT TICKETS							X			X		C									
			2.1.1	CERTIFIED QUANTITATIVE ANALYSIS REPORT							X			X		C									
			2.1.2.2	WOOD CELLULOSE FIBER MULCH										X		C									
			2.2.2	SOIL TESTING RESULTS									X	X		C									
			2.2.3.1	FERTILIZER AND LIMESTONE INVOICES					X					X		C									
			2.2.4	REPRESENTATIVE SAMPLE OF MULCH								X		X		C									

DIVISION 1 - GENERAL REQUIREMENTS

SECTION 01451

CONTRACTOR QUALITY CONTROL

TABLE OF CONTENTS

PART 1 GENERAL
- 1.1 REFERENCES
- 1.2 PAYMENT

PART 2 PRODUCTS (Not Applicable)

PART 3 EXECUTION
- 3.1 GENERAL
- 3.2 QUALITY CONTROL PLAN
  - 3.2.1 General
  - 3.2.2 Content of the CQC Plan
  - 3.2.3 Acceptance of Plan
  - 3.2.4 Notification of Changes
- 3.3 COORDINATION MEETING
- 3.4 QUALITY CONTROL ORGANIZATION
  - 3.4.1 CQC System Manager
  - 3.4.2 CQC Staff
  - 3.4.3 Additional Requirement
- 3.5 SUBMITTALS
- 3.6 CONTROL
  - 3.6.1 Preparatory Phase
  - 3.6.2 Initial Phase
  - 3.6.3 Follow-up Phase
  - 3.6.4 Additional Preparatory and Initial Phases
- 3.7 TESTS
  - 3.7.1 Testing Procedure

3.7.2 Testing Laboratories
3.7.2.1 Laboratory Validation
3.7.2.2 Capability Check
3.7.2.3 Capability Recheck
3.7.3 On-Site Laboratory
3.7.4 Furnishing or Transportation of Samples for Testing
3.8 COMPLETION INSPECTION
3.9 DOCUMENTATION
3.10 NOTIFICATION OF NONCOMPLIANCE

SECTION 01451

CONTRACTOR QUALITY CONTROL

PART 1 GENERAL

1.1 REFERENCES

The publications listed below form a part of this specification to the extent referenced. The publications are referred to in the text by basic designation only.

AMERICAN SOCIETY FOR TESTING AND MATERIALS (ASTM)

ASTM D 3740	Minimum Requirements for Agencies Engaged in the Testing and/or Inspection of Soil and Rock as Used in Engineering Design and Construction
ASTM E 329	Agencies Engaged in the Testing and/or Inspection of Materials Used in Construction

1.2 PAYMENT

Separate payment will not be made for providing and maintaining an effective Quality Control program, and all costs associated therewith shall be included in the applicable unit prices or lump-sum prices contained in the Bidding Schedule.

PART 2 PRODUCTS (Not Applicable)

PART 3 EXECUTION

3.1 GENERAL

The Contractor is responsible for quality control and shall establish and maintain an effective quality control system in compliance with the Contract Clause entitled "Inspection of Construction." The quality control system shall consist of plans, procedures, and organization necessary to produce an end product that complies with the contract requirements. The system shall cover all construction operations, both on-site and off-site, and shall be keyed to the proposed construction sequence.

3.2 QUALITY CONTROL PLAN

3.2.1 General

The Contractor shall furnish for review by the Government, not later than 15 calendar days after receipt of Notice of Award of the contract, the Contractor Quality Control (CQC) Plan proposed to implement the requirements of the Contract Clause entitled "Inspection of Construction." The plan shall identify personnel, procedures, control, instructions, test, records, and forms to be used. The Government will consider an interim plan for the first 15 days of operation. Construction will be permitted to begin only after acceptance of the CQC Plan or acceptance of an interim plan applicable to the particular feature of work to be started. Work outside of the features of work included in an accepted interim plan will not be permitted to begin until acceptance of a CQC Plan or another interim plan containing the additional features of work to be started.

3.2.2 Content of the CQC Plan

The CQC plan shall include, as a minimum, the following to cover all construction operations, both on-site and off-site, including work by subcontractors, fabricators, suppliers, and purchasing agents:

a. A description of the quality control organization, including a chart showing lines of authority and acknowledgement that the CQC staff shall implement the three phase control system for all aspects of the work specified. The staff shall include a CQC system manager and an alternate CQC system manager. Each shall report to the project manager or higher in the Contractor's organization. Project manager in this context shall mean the individual with responsibility for the overall management of the project, including quality and production. Both the CQC system manager and the alternate CQC system manager shall have completed, within the last five years, the Corps sponsored course on Construction Quality Management for Contractors and shall submit copies of certificates as part of the CQC Plan. No work shall be performed on this contract without the presence of the CQC system manager or the alternate CQC system manager at the job site.

b. The name, qualifications (in resume format), duties, responsibilities, and authorities of each person assigned a CQC function.

c. A copy of the letter to the CQC system manager and the alternate CQC system manager signed by an authorized official of the firm which describes the responsibilities and delegates sufficient authorities to adequately perform the functions of the CQC system manager and the alternate CQC system manager, including authority to stop work which is not in compliance with the contract. The CQC system manager and the alternate CQC system manager shall issue letters of direction to all other various quality control representatives outlining duties, authorities, and responsibilities. Copies of these letters will also be furnished to the Government.

d. Procedures for scheduling, reviewing, certifying, and managing submittals, including those of subcontractors, off-site fabricators, suppliers, and purchasing agents. These procedures shall be in accordance with Section 01330.

e. Control, verification, and acceptance testing procedures for each specific test to include the test name, specification paragraph requiring test, feature of work to be tested, test frequency, testing laboratory, and person responsible for each test.

f. Procedures for tracking preparatory, initial, and follow-up control phases and control, verification, and acceptance tests including documentation.

g. Procedures for tracking construction deficiencies from identification through acceptable corrective action. These procedures will establish verification that identified deficiencies have been corrected.

h. Reporting procedures, including proposed reporting formats.

i. A list of the definable features of work. A definable feature of work is a task that is separate and distinct from other tasks and has separate control requirements. Different trades or disciplines could identify it, or it could be work by the same trade in a different environment. Although each section of the specifications may generally be considered as a definable feature of work, there is frequently more than one definable feature under a particular section. This list will be agreed upon during the coordination meeting.

3.2.3 Acceptance of Plan

Acceptance of the Contractor's plan is required prior to the start of construction. Acceptance is conditional and will be predicated on satisfactory performance during the construction. The Government reserves the right to require the Contractor to make changes in his CQC plan and operations including removal of personnel, as necessary, to obtain the quality specified.

3.2.4 Notification of Changes

After acceptance of the QC plan, the Contractor shall notify the Contracting Officer in writing a minimum of seven calendar days prior to any proposed change. Proposed changes are subject to acceptance by the Contracting Officer.

3.3 COORDINATION MEETING

After the Preconstruction Conference but before start of construction, the Contractor shall meet with the Contracting Officer or Authorized Representative and discuss the Contractor's quality control system. During the meeting, a mutual understanding of the system details shall be developed, including the forms for recording the CQC operations, control activities, testing, administration of the system for both on-site and off-site work, and the interrelationship of Contractor's Management and control with the Government's Quality Assurance.

Minutes of the meeting shall be prepared by the Government and signed by both the Contractor and the Contracting Officer. The minutes shall become a part of the contract file. There may be occasions when subsequent conferences will be called by either party to reconfirm mutual understandings and/or address deficiencies in the CQC system or procedures which may require corrective action by the Contractor.

3.4 QUALITY CONTROL ORGANIZATION

3.4.1 CQC System Manager

The Contractor shall identify an individual within his organization at the worksite who shall be responsible for overall management of CQC and have the authority to act in all CQC matters for the Contractor. This CQC System Manager shall be subject to acceptance by the Contracting Officer. The CQC System Manager shall be assigned as System Manager but may have other duties in addition to quality control.

3.4.2 CQC Staff

A staff shall be maintained under the direction of the CQC System Manager to perform all CQC activities. An alternate will be identified to serve in the absence of the CQC System Manager. The staff must be of sufficient size to ensure adequate CQC coverage of all work phases, work shifts, and work crews involved in the construction. These personnel may perform other duties, but must be fully qualified by experience and technical training to perform their assigned CQC responsibilities and must be allowed sufficient time to carry out these responsibilities. The CQC plan will clearly state the duties and responsibilities of each staff member. All CQC Staff members or replacements shall be subject to acceptance by the Contracting Officer.

3.4.3 Additional Requirement

In addition to the above requirements, the CQC System Manager and his/her alternate shall completed within the last 5 years the course entitled "Construction Quality Management for Contractors". This course is generally offered every quarter starting with the month of February. For further details and for the actual class schedule see the following website http://155.76.117.11/conops/const_quality.htm. This course is periodically offered by the Memphis District as well as other Corps Districts.

3.5 SUBMITTALS

Submittals shall be in accordance with Section 01330. The CQC organization shall be responsible for certifying that all submittals are in compliance with the contract requirements.

3.6 CONTROL

The controls shall include at least three phases of control to be conducted by the CQC System Manager for all definable features of work, as follows:

3.6.1 Preparatory Phase

This phase shall be performed prior to beginning work on each definable feature of work and shall include:

a. A review of each paragraph of applicable specifications.

b. A review of the contract drawings.

c. A check to assure that all materials and/or equipment have been tested, submitted, and approved.

d. A check to assure that provisions have been made to provide required control inspection and testing.

e. Examination of the work area to assure that all required preliminary work has been completed and is in compliance with the contract.

f. A physical examination of required materials, equipment, and sample work to assure that they are on hand, conform to approved shop drawings or submitted data, and are properly stored.

g. A review of the appropriate activity hazard analysis to assure safety requirements are met.

h. Discussion of procedures for constructing the work including repetitive deficiencies. Document construction tolerances and workmanship standards for that phase of work.

i. A check to ensure that the portion of the plan for the work to be performed has been accepted by the Contracting Officer.

j. The Government shall be notified at least 24 hours in advance of beginning any of the required action of the preparatory phase. This phase shall include a meeting conducted by the CQC System Manager and attended by the superintendent, other CQC personnel (as applicable), and the foreman responsible for the definable feature. The results of the preparatory phase actions shall be documented by separate minutes prepared by the CQC System Manager and attached to the daily CQC report. The Contractor shall instruct applicable workers as to the acceptable level of workmanship required in order to meet contract specifications.

3.6.2 Initial Phase

This phase shall be accomplished at the beginning of a definable feature of work. The following shall be accomplished:

a. A check of preliminary work to ensure that it is in compliance with contract requirements. Review minutes of the preparatory meeting.

b. Verification of full contract compliance. Verify required control inspection and testing.

c. Establish level of workmanship and verify that it meets minimum acceptable workmanship standards. Compare with sample panels as appropriate.

d. Resolve all differences.

e. Check safety to include compliance with and upgrading of the safety plan and activity hazard analysis. Review the activity analysis with each worker.

f. The Government shall be notified at least 24 hours in advance of beginning the initial phase. Separate minutes of this phase shall be prepared by the CQC System Manager and attached to the daily CQC report. Exact location of initial phase shall be indicated for future reference and comparison with follow-up phases.

g. The initial phase should be repeated for each new crew to work on-site, or any time acceptable specified quality standards are not being met.

3.6.3 Follow-up Phase

Daily checks shall be performed to assure continuing compliance with contract requirements, including control testing, until completion of the particular feature of work. The checks shall be made a matter of record in the CQC documentation. Final follow-up checks shall be conducted and all deficiencies corrected prior to the start of additional features of work which may be affected by the deficient work. The Contractor shall not build upon or conceal non-conforming work.

3.6.4 Additional Preparatory and Initial Phases

As determined by the Government, additional preparatory and initial phases may be conducted on the same definable features of work if the quality of on-going work is unacceptable, if there are changes in the applicable CQC staff, on-site production supervision or work crew, if work on a definable feature is resumed after a substantial period of inactivity, or if other problems develop.

3.7 TESTS

3.7.1 Testing Procedure

The Contractor shall perform specified or required tests to verify that control measures are adequate to provide a product which conforms to contract requirements. Testing includes operation and/or acceptance tests when specified. The Contractor shall procure the services of a Corps of Engineers approved testing laboratory or establish an approved testing laboratory at the project site in accordance with paragraph 3.7.2

below. The Contractor shall perform the following activities and record and provide the following data:

a. Verify that testing procedures comply with contract requirements.

b. Verify that facilities and testing equipment are available and comply with testing standards.

c. Check test instrument calibration data against certified standards.

d. Verify that recording forms and test identification control number system, including all of the test documentation requirements, have been prepared.

e. Results of all tests taken, both passing and failing tests, will be recorded on the CQC report for the date taken. Specification paragraph reference, location where tests were taken, and the sequential control number identifying the test will be given. If approved by the Contracting Officer, actual test reports may be submitted later with a reference to the test number and date taken. An information copy of tests performed by an off-site or commercial test facility will be provided directly to the Contracting Officer. Failure to submit timely test reports as stated may result in nonpayment for related work performed and disapproval of the test facility for this contract.

3.7.2 Testing Laboratories

3.7.2.1 Laboratory Validation

A testing laboratory validated by the Material Testing Center (MTC) of the Corps of Engineers shall perform all testing of soil, gravel, aggregate, stone, concrete, and asphalt. Refer to http://www.wes.army.mil/SL/MTC/ValStatesTbl.htm for a complete and current list of validated commercial laboratories. This website is maintained by the MTC. If the Contractor proposes to use a commercial laboratory that is not validated or set up an on-site laboratory, he/she shall make arrangements for validation by contacting the Material Testing Center at Waterways Experiment Station, Vicksburg, Mississippi, telephone numbers: 601-634-2496 or 601-634-3610 www.wes.army.mil/SL/MTC/inspection.htm. The Government will not be responsible for any cost associated with the validation of laboratories that are not currently validated. The validation process could take 60 to 90 days or more. The Contractor shall be responsible for determining the amount of time required for the validation of the proposed laboratory and accounting for this event in his/her progress schedule. If the Contractor elects to use a non-validated laboratory, the work that requires testing shall not commence until the laboratory has been validated by MTC.

3.7.2.2 Capability Check

The Contracting Officer reserves the right to check laboratory equipment in the proposed laboratory for compliance with the standards set forth in the contract specifications and to check the laboratory technician's testing procedures and techniques. Laboratories utilized for testing soils, concrete, asphalt, and steel shall meet criteria detailed in ASTM D 3740 and ASTM E 329.

3.7.2.3 Capability Recheck

If the selected laboratory fails the capability check, the Contractor will be assessed a charge to reimburse the Government for each succeeding recheck of the laboratory or the checking of a subsequently selected laboratory. Such costs will be deducted from the contract amount due the Contractor. There will be no extension of time allowed due to necessity to perform capability rechecks.

3.7.3 On-Site Laboratory

The Contracting Officer reserves the right to utilize the Contractor's control testing laboratory and equipment to make assurance tests and to check the Contractor's testing procedures, techniques, and test results at no additional cost to the Government.

3.7.4 Furnishing or Transportation of Samples for Testing

Costs incidental to the transportation of samples or materials will be borne by the Contractor. Samples of materials for test verification and acceptance testing by the Government shall be delivered by the Contractor to a location specified by the Contracting Officer.

3.8 COMPLETION INSPECTION

At the completion of all work or any increment thereof established by a completion time as stated in Contract Clause 52.211-10 entitled "Commencement, Prosecution, and Completion of Work," or stated elsewhere in the specifications, the CQC System Manager shall conduct an inspection of the work and develop a "punch list" of items which do not conform to the approved drawings and specifications. Such a list of deficiencies shall be included in the CQC documentation, as required by paragraph “DOCUMENTATION” below, and shall include the estimated date by which the deficiencies will be corrected. The CQC System Manager or staff shall make a second inspection to ascertain that all deficiencies have been corrected and so notify the Government. These inspections and any deficiency corrections required by this paragraph will be accomplished within the time stated for completion of the entire work or any particular increment thereof if the project is divided into increments by separate completion dates.

3.9 DOCUMENTATION

The Contractor shall maintain current records providing factual evidence that required quality control activities and/or tests have been performed. These records shall include the work of subcontractors and suppliers and shall be on an acceptable form that includes, as a minimum, the following information:

a. Contractor/subcontractor and their area of responsibility.

b. Operating plant/equipment with hours worked, idle, or down for repair.

c. Work performed each day, giving location, description, and by whom. When Network Analysis (NAS) is used, identify each phase of work performed each day by NAS activity number.

d. Test and/or control activities performed with results and references to specifications/drawings requirements. The control phase should be identified (Preparatory, Initial, and Follow-up). List deficiencies noted along with corrective action.

e. Quantity of materials received at the site with statement as to acceptability, storage, and reference to specifications/drawings requirements.

f. Submittals reviewed, with contract reference, by whom, and action taken.

g. Off-site surveillance activities, including actions taken.

h. Job safety evaluations stating what was checked, results, and instructions or corrective actions.

i. Instructions given/received and conflicts in plans and/or specifications.

j. Contractor's verification statement.

These records shall indicate a description of trades working on the project; the number of personnel working; weather conditions encountered; and any delays encountered. These records shall cover both conforming and deficient features and shall include a statement that equipment and materials incorporated in the work and workmanship comply with the contract. The original and one copy of these records in report form shall be furnished to the Government daily within 24 hours after the date(s) covered by the report, except that reports need not be submitted for days on which no work is performed. As a minimum, one report shall be prepared and submitted for every seven days of no work and on the last day of a no work period. All calendar days shall be accounted for throughout the life of the contract. The first report following a day of no work shall be for that day only. Reports shall signed and dated by the CQC System Manager. The report from the CQC System Manager shall include copies of test reports and copies of reports prepared by all subordinate quality control personnel.

3.10 NOTIFICATION OF NONCOMPLIANCE

The Contracting Officer will notify the Contractor of any detected noncompliance with the foregoing requirements. The Contractor shall take immediate corrective action after receipt of such notice. Such notice, when delivered to the Contractor at the worksite, shall be deemed sufficient for the purpose of notification. If the Contractor fails or refuses to comply promptly, the Contracting Officer may issue an order stopping all or part of the work until satisfactory corrective action has been taken. No part of the time lost due to such stop orders shall be made the subject of claim for extension of time or for excess costs or damages by the Contractor.

-- End of Section --

DIVISION 1 - GENERAL REQUIREMENTS

SECTION 01452

PROJECT SIGNS

TABLE OF CONTENTS

PART 1 GENERAL
1.1 SCOPE
1.2 PROJECT SIGNS
1.3 PAYMENT

PART 2 PRODUCTS (Not Applicable)

PART 3 EXECUTION (Not Applicable)

SECTION 01452

PROJECT SIGNS

PART 1 GENERAL

1.1 SCOPE

The work covered by this section consists of furnishing, erecting, maintaining, and removing project signs.

1.2 PROJECT SIGNS

The Contractor shall furnish, erect, and maintain two double-faced project signs at each site as designated by the Contracting Officer. The signs shall be constructed of 3/4-inch marine-grade plywood or 22 gage metal, mounted on a substantial framework of 2-inch material. Size, lettering, color and paint shall conform to the details shown on the drawing "Temporary Project Sign" included at the end of this section. Upon request, the Government will furnish without cost to the Contractor four decals of the Engineer Castle. The signs shall be erected as soon as practicable, but not later than 15 calendar days after the date established for commencement of work. The signs shall be removed upon completion of all other construction work under the contract and will become the property of the Contractor.

1.3 PAYMENT

No separate payment will be made for erecting, maintaining and removing project signs and all costs in connection therewith will be considered an incidental obligation of the Contractor.

PART 2 PRODUCTS (Not Applicable)

PART 3 EXECUTION (Not Applicable)

--End of Section--

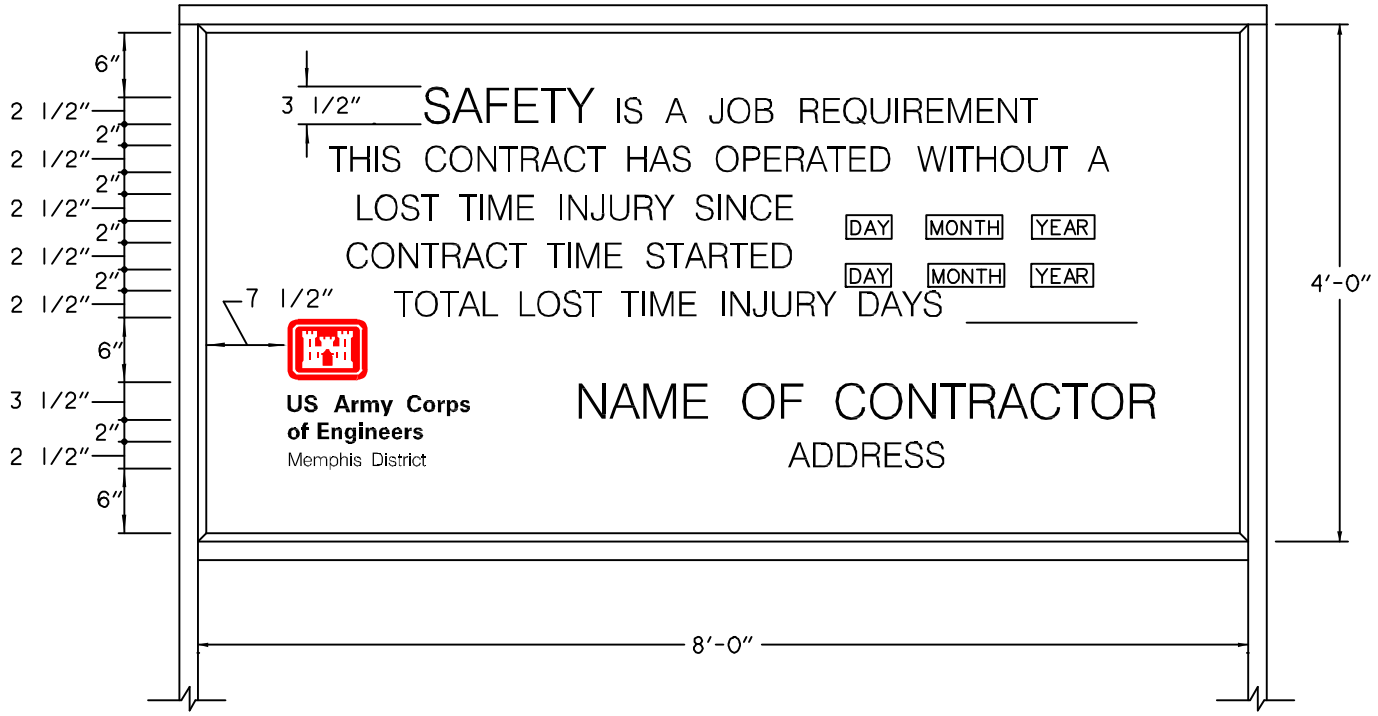

ELEVATION

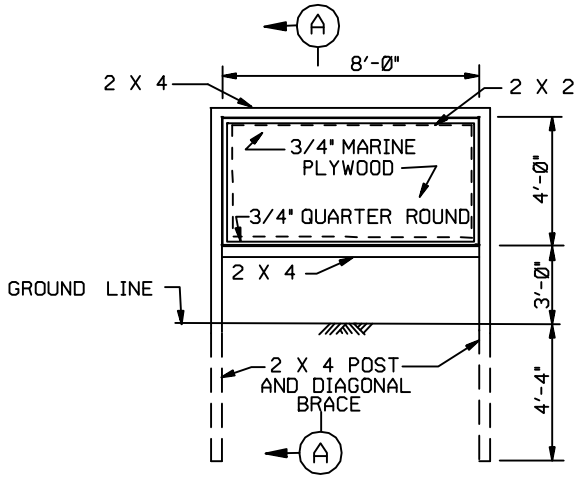

ELEVATION

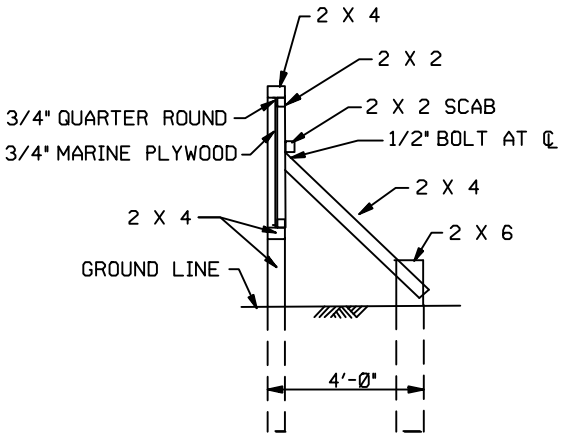

SECTION A-A

NOTES:

1. CONTRACTOR SHALL CONSTRUCT AND MAINTAIN A DURABLE SIGN AS SHOWN.
2. WOOD IN CONTACT WITH GROUND SHALL BE TREATED LUMBER.
3. ALL EXPOSED SURFACES SHALL BE WHITE HOUSE PAINT.
4. LETTERING SHALL BE BLACK.
5. ENGINEER CASTLE DECAL FURNISHED BY GOVERNMENT.
6. 22 GA. SHEET METAL MAY BE USED IN LIEU OF PLYWOOD.

US Army Corps of Engineers
Memphis District

ENGINEER CASTLE DETAIL

SCALE: NONE MARCH 1995

U.S. ARMY ENGINEER DISTRICT, MEMPHIS
CORPS OF ENGINEERS
MEMPHIS, TENNESSEE

SAFETY SIGN

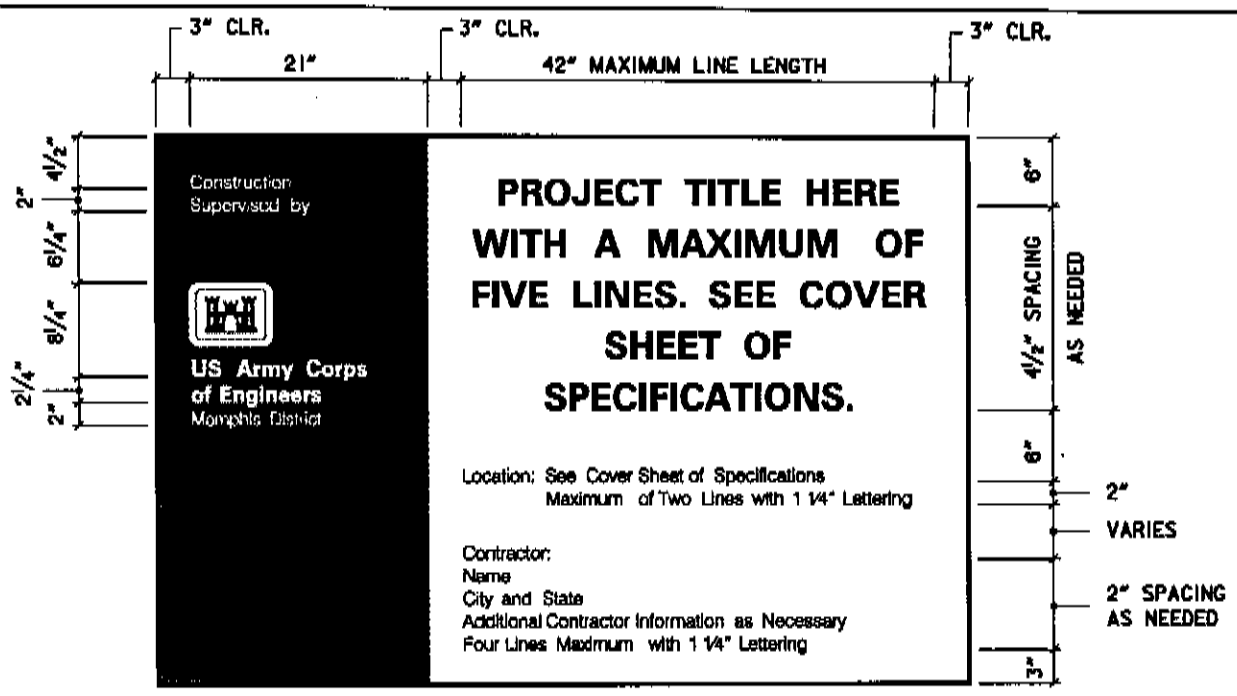

ELEVATION

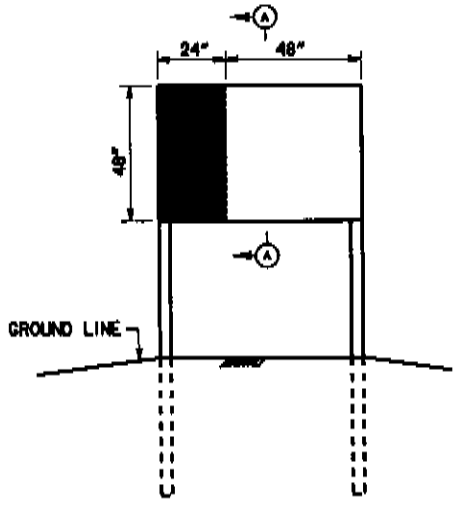

ELEVATION

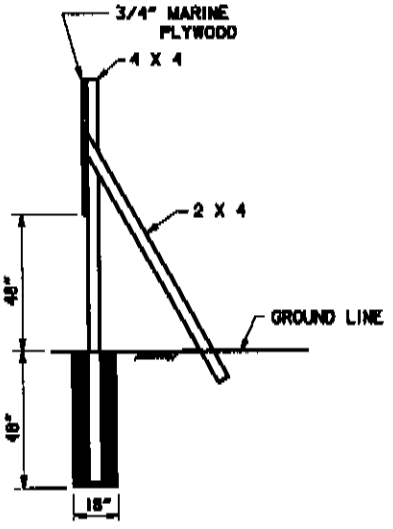

SECTION A-A

SPECIFICATIONS

1. SIGN PANEL SHALL BE 4' x 6' x 3/4" MARINE PLYWOOD OR 22 GAGE SHEET METAL.
2. POSTS AND BRACING SHALL BE TREATED, NO.1 GRADE YELLOW PINE.
3. ALL EXPOSED SURFACES SHALL BE GIVEN ONE COAT OF LINSEED OIL AND WIPED PRIOR TO PRIMING.
4. ALL EXPOSED SURFACES SHALL BE GIVEN ONE COAT OF WHITE AS PRIMER. SECOND COAT SHALL BE COMMUNICATIONS RED ON LEFT AND WHITE ELSEWHERE.
5. THE LEFT SECTION SHALL BE RED WITH WHITE LEGEND. THE RIGHT SECTION SHALL BE WHITE WITH BLACK LEGEND.
6. PAINT SHALL BE BENJAMIN MOORE NO. 120-60 POLY-SILICONE ENAMEL OR APPROVED
7. ALL LETTERING SHALL BE 1 1/4" EXCEPT FOR THE WORDS "US Army Corps of Engineers" AND THE PROJECT TITLE. THE WORDS "US Army Corps of Engineers" SHALL BE 1 1/2" TALL. THE PROJECT TITLE LETTERING SHALL BE A MINIMUM OF 1 1/2" TALL AND A MAXIMUM OF 3 1/2" TALL. THE LETTERING SIZE SHALL BE CHOSEN SUCH THAT LARGEST POSSIBLE LETTERS ARE USED WITHOUT EXCEEDING A MAXIMUM LINE LENGTH OF 42". THE NUMBER OF LINES IN THE PROJECT TITLE SHALL MATCH THAT SHOWN ON THE COVER SHEET OF THE SPECIFICATIONS.

SCALE: NONE JUNE 1998

U.S. ARMY ENGINEER DISTRICT, MEMPHIS
CORPS OF ENGINEERS
MEMPHIS, TENNESSEE

TEMPORARY PROJECT SIGN

DIVISION 02 - SITE WORK

SECTION 02100

CONSTRUCTION PROCEDURES

TABLE OF CONTENTS

PART 1 GENERAL
1.1 SCOPE
1.2 SUBAQUEOUS PLACEMENT LIMITATIONS
1.3 ORDER OF WORK

PART 2 PRODUCTS (Not Applicable)

PART 3 EXECUTION (Not Used)

DIVISION 02 - SITE WORK

SECTION 02100

CONSTRUCTION PROCEDURES

PART 1 GENERAL

1.1 SCOPE

The work provided for herein consists of furnishing all plant, labor, material, and equipment and performing all work in strict accordance with the specifications, schedules, and drawings, for the construction of the relief wells and associated drainage along the wells and the enlargement of Ditch 8. The work shall be completed as expeditiously as possible.

1.2 SUBAQUEOUS PLACEMENT LIMITATIONS

The intent is to place the riprap and filter fabric in the dry; however, the Contracting Officer will consider placement in depths of water not greater than two feet above the design grade of the riprap.

1.3 ORDER OF WORK

The order of work for this project shall be as follows. However, the sequence of construction between the earth work (collector ditches and enlargement of Ditch 8) and the installation of the relief wells shall be left to the Contractor's discretion as long as the following guidelines are met and the Contractor has approval from the COR.

(1) Locate the relief wells, acquire COR approval on the location, drill pilot holes and install piezometers.

(2) Piezometers shall be operational and the readings shall be provided to the COR.

(3) The Contractor can either install the relief wells or excavate and/or place excavated material or a combination of both as long as the following criteria is met.

a. The excavation for the channel enlargement of Ditch 8 shall begin at the downstream end or at the confluence of Ditch 8 and Ditch 1 and proceed in an upstream direction.

b. If the relief wells are installed before the final ditch configuration is completed, then there shall be sufficient drainage to conduct the complete installation and testing of the relief wells without flooding outside the ROW limits and the water produced during testing shall be conveyed to Ditch 8 without using existing drainage outside the ROW limits. The Contractor shall also be required to meet the requirements of Section 02708, 3.13 Emergency Well Closure During Construction.

c. The requirements of Section 01130 and the SWPPP plan shall be met at all times during construction.
d. Excavated materials shall be first utilized in the construction of the culverts including field access road embankments, filling ditches along the levee toe and for filling the left bank field road before being placed in the pond/disposal area as indicated in Section 02225.

PART 2 PRODUCTS (Not Applicable)

PART 3 EXECUTION (Not Used)

--End of Section--

DIVISION 2 - SITE WORK

SECTION 02114

CLEARING

TABLE OF CONTENTS

PART 1 GENERAL
1.1 SCOPE
1.2 QUALITY CONTROL

PART 2 PRODUCTS (Not Applicable)

PART 3 EXECUTION
3.1 CLEARING
3.1.1 General
3.1.2 Uprooting
3.1.3 Holes from Uprooting
3.1.4 Miscellaneous
3.2 DISPOSAL OF CLEARED MATERIALS
3.2.1 General
3.2.2 Burning
3.2.3 Removal from Site

SECTION 02114

CLEARING

PART 1 GENERAL

1.1 SCOPE

The work provided for herein consists of furnishing all plant, labor, material and equipment, and performing all operations required for proper execution of the clearing work as specified herein. Such work includes clearing and disposal of debris therefrom, and performing all work incidental thereto.

1.2 QUALITY CONTROL

The Contractor shall establish and maintain quality control for the work specified in this section to assure compliance with the contract requirements and maintain records of his quality control for all construction operations including but not limited to the following:

(1) Clearing. Location, heights, limits.

(2) Disposal of Cleared Materials. Damage to timber or improvements that are not to be cleared, disposition off-site. A copy of these records and tests, as well as the records of corrective action taken, shall be furnished the Government.

PART 2 PRODUCTS (Not Applicable)

PART 3 EXECUTION

3.1 CLEARING

3.1.1 General

Clearing shall consist of the removal of all timber, standing or felled in previous cuttings, snags, abandoned piling, vines, stumps from previous cuttings, rootwads, bushes, partially buried logs, debris from clearing operations, driftwood, and other debris in areas and to the extent specified herein below. Clearing shall be performed to the limits as shown on the drawings to install the relief wells, the corrugated metal culvert pipe, the collector ditches, and all areas necessary for operation of the Contractors equipment. No trees shall be removed from baseline station 8/25+36 to 8/38+50

(Relief Well No.'s 1 through 11) greater than 8-inches in diameter without approval from the COR. All trees shall be removed from Baseline Station 8/38+50 to Station 9/6+00.

3.1.2 Uprooting

Within all areas where work is required, all growth, stumps, partially buried logs, snags, abandoned piling, and other projections, shall be removed by uprooting or shall be cut off flush with the existing earth surfaces.

3.1.3 Holes from Uprooting

All holes resulting from uprooting as permitted in 3.1.2 above shall be filled. Holes shall be filled to the elevation of the adjacent existing or excavated surfaces. Holes shall be filled with suitable earth material in 12-inch layers prior to compaction and each layer shall be compacted to a density at least equal to that of the adjacent undisturbed material.

3.1.4 Miscellaneous

Clearing shall be only that necessary for construction purposes and operation of equipment, and shall be subject to the approval of the Contracting Officer. Optimum effort shall be exercised by the Contractor to preserve as many trees as practicable outside the required clearing areas.

3.2 DISPOSAL OF CLEARED MATERIALS

3.2.1 General

All debris resulting from clearing operations on this contract shall be disposed of by burning or removal from the site

3.2.2 Burning.

The Contractor shall comply with the applicable pollution restrictions of the State of Missouri. Subject to such restrictions and obtaining any permit which may be required by said State, the Contractor may burn material within the contract area, and at any time within the contract period. If the Contractor elects to burn, any remaining root wads or unburned wood shall be removed from the site. Burning operations shall be conducted so as to prevent damage to standing timber or other flammable growth. The Contractor will be responsible for any damage to life and/or property resulting from fires that are started by his employees or as a result of his operations. The Contractor shall furnish, at the site of burning operations, adequate fire fighting equipment to properly equip his personnel for fighting fires. Fires shall be guarded at all times and shall be under constant surveillance until they have been extinguished.

3.2.3 Removal from Site

The Contractor may elect to remove debris resulting from clearing operations from the work site. Such disposal shall comply with all applicable Federal, State and local laws. The Contractor may, at his option, retain for his own use or disposal by sale or otherwise any such materials of value. The Government assumes no responsibility for the protection or safekeeping of any materials retained by the Contractor. Such materials shall be removed from the site of the work before the date of completion of the work under this contract. The locations and manner of placement of clearing debris on the right-of-way by the Contractor for his convenience prior to removal of the debris from the site of the work shall be subject to the approval of the Contracting Officer.

--End of Section--

DIVISION 2 - SITE WORK

SECTION 02215

GEOTEXTILE (FILTER FABRIC)

TABLE OF CONTENTS

PART 1 GENERAL
- 1.1 SCOPE
- 1.2 QUALITY CONTROL
- 1.3 APPLICABLE PUBLICATION

PART 2 PRODUCTS
- 2.1 GEOTEXTILE
  - 2.1.1 General
  - 2.1.2 Seams
  - 2.1.3 Acceptance Requirements
- 2.2 SHIPMENT AND STORAGE

PART 3 EXECUTION
- 3.1 BASE PREPARATION
- 3.2 SECURING PINS
- 3.3 INSTALLATION

SECTION 02215

GEOTEXTILE (FILTER FABRIC)

PART 1 GENERAL

1.1 SCOPE

The work provided for herein consists of furnishing all plant, labor, material, and equipment and performing all operations required for furnishing, hauling, and placing the geotextile complete, as specified herein, and maintaining the geotextile until applicable cover is completed and accepted.

1.2 QUALITY CONTROL

The Contractor shall establish and maintain quality control for the work specified in this section to assure compliance with contract requirements and maintain records of his quality control for all construction operations including but not limited to the following:

(1) Material

Conforms to specifications.

(2) Placement

Location, foundation, limits, anchoring, laps, finished surfaces.

A copy of these records and tests, as well as the records of corrective action taken, shall be furnished the Government.

1.3 APPLICABLE PUBLICATION

The following publication of the issues listed below, but referred to thereafter by basic designation only, forms a part of this specification to the extent indicated by the references thereto:

AMERICAN SOCIETY FOR TESTING AND MATERIALS (ASTM) PUBLICATIONS.

D 1683	Failure in Sewn Seams of Woven Fabrics
D 4439	Terminology for Geosynthetics
D 4491	Water Permeability of Geotextiles by Permittivity
D 4533	Trapezoid Tearing Strength of Geotextiles
D 4632	Grab Breaking Load and Elongation of Geotextiles
D 4751	Apparent Opening Size of a Geotextile
D 4833	Index Puncture Resistance of Geotextiles, Geomembranes, and Related Products
D 4886	Abrasion Resistance of Geotextiles (Sand Paper/Sliding Block Method)

PART 2 PRODUCTS

2.1 GEOTEXTILE

2.1.1 General

The geotextile shall be a non-woven pervious sheet of plastic yarn as defined by ASTM D 4439. The geotextile shall meet the physical requirements listed in Table No. 1, inserted at the end of this section. The geotextile shall provide an Equivalent Opening Size (EOS) no finer than the U.S. Standard Sieve No. 100 and no coarser than the U.S. Standard Sieve No. 50. The geotextile shall consist of a long-chain synthetic polymer composed of at least 85 percent by weight of ester, propylene, ethylene, amide or vinylidene-chloride, and shall contain stabilizers and/or inhibitors added to the base plastic if necessary to make the filaments resistant to deterioration due to ultra-violet and heat exposure. The edges of the geotextile shall be finished to prevent the outer yarn from pulling away from the geotextile.

2.1.2 Seams

The seams of the geotextile shall be sewn with thread of a material meeting the chemical requirements given above for geotextile yarn or shall be bonded by cementing or by heat. The sheets of geotextile shall be attached at the factory or another approved location, if necessary, to form sections using the manufacturer's standard width or a width of 12-feet, whichever is greater. Seams shall be tested in accordance with method ASTM D 1683, using 1-inch square jaws and 12 inches per minute constant rate of traverse. The

strengths shall be not less than 90 percent of the required tensile strength (Table No. 1) of the unaged geotextile in any principal direction. "Table No. 1 - Physical Requirements" is at the end of this section.

2.1.3 Acceptance Requirements

All brands of geotextile and all seams to be used will be accepted on the following basis. The Contractor shall furnish the Contracting Officer, in duplicate, a mill certificate or affidavit signed by a legally authorized official from the company manufacturing the geotextile. The mill certificate or affidavit shall attest that the geotextile meets the chemical, physical and manufacturing requirements stated in this specification. If requested by the Contracting Officer, the Contractor shall provide to the Government geotextile samples for testing to determine compliance with any or all of the requirements in this specification. When samples are to be provided, they shall be submitted a minimum of 60 days prior to the beginning of installation of the same geotextile. All samples provided shall be from the same production lot as will be supplied for the contract, and shall be the full manufactured width of the geotextile by at least 10 ft. long, except that samples for seam strength may be a full width sample folded over and the edges stitched for a length of at least 5 feet. Samples submitted for testing shall be identified by manufacturer's lot designation.

2.2 SHIPMENT AND STORAGE

During all periods of shipment and storage, the geotextile shall be protected from direct sunlight, ultra-violet rays, temperatures greater than 140 degrees F, mud, dirt, dust and debris. To the extent possible, the geotextile shall be maintained wrapped in a heavy duty protective covering.

PART 3 EXECUTION

3.1 BASE PREPARATION

Areas on which geotextile is to be placed shall be dressed to remove humps and depressions within the slope lines and to provide relatively smooth and uniform surfaces to conform to the cross sections shown on the drawings and as described henceforth in this paragraph. Immediately prior to placing the geotextile, the prepared base will be inspected by the Contracting Officer and no geotextile shall be placed until those areas have been approved.

3.2 SECURING PINS

Securing pins shall be 3/16-inch in diameter, steel, pointed at one end and fabricated with a head to retain a steel washer having an outside diameter of no less than 1.5 inches. The length of the pins shall be no less than 18 inches. Securing pins with washers shall be inserted through both strips of overlapped cloth at not greater than 2 foot intervals along a line through the midpoint of the overlap. Additional pins shall be installed as necessary to prevent any slippage of the filter cloth regardless of location. Geotextile placed against riprap may be held in place using riprap stones.

3.3 INSTALLATION

The geotextile shall be placed in the locations shown on the drawings. At the time of installation, geotextile will be rejected if it has defects, rips, holes, flaws, deterioration or damage incurred during manufacture, transportation or storage. The geotextile shall be laid smooth and free of tension, folds, wrinkles or creases. The strips shall be placed to provide a minimum width of 12 inches of overlap for each joint. The geotextile shall be secured as specified in 3.2 above and any additional securing regardless of location shall be made as necessary to prevent any slippage of the geotextile. The geotextile shall be protected at all times during construction from contamination by surface runoff and any geotextile so contaminated shall be removed and replaced with uncontaminated geotextile. The geotextile shall be installed from upslope to downslope with the upstream geotextile strip overlapping the adjacent downstream geotextile strip to the limits as shown on the drawings. Any geotextile damaged during its installation or during placement of the specified material upon or against the geotextile shall be replaced by the Contractor at no cost to the Government. The work shall be scheduled so that the covering of the geotextile with a layer of the specified material is accomplished within 7 days after placement of the geotextile. Failure to comply will require replacement of geotextile. The geotextile shall be protected from damage due to the placement of material thereon by limiting the height of drop of the material. Before placement of material thereon, the Contractor shall demonstrate that the placement technique will prevent damage to the geotextile. Also, after installation of geotextile, no construction equipment of any type will be allowed on the geotextile surface.

-- End of Section --

Table No. 1 - Physical Requirements

Physical Property	Test Procedure	Applicable Values++
Geotextile Permeability (Kg)	ASTM D 4491 Test Methods For Water Permeability of Geotextiles by Permittivity	The permeability of the Geotextile shall be greater than 0.49 Feet Per Minute (0.25 Centimeters per Second)
Tear Strength	ASTM D 4533 Trapezoidal Tear Strength	30 pounds minimum in any principal direction
Tensile Strength +(unaged geotextile)	ASTM D 4632 Determine breaking load as specified in the ASTM	200 pound minimum in any principal direction
Breaking Elongation +(unaged geotextile)	ASTM D 4632 Determine Apparent Elongation Breaking	15 percent minimum in any principal direction
Equivalent Opening Size (EOS)	ASTM D 4751 Determine Apparent Opening Size-AOS (EOS)	No finer than the U.S. Standard Sieve No. 100 and no coarser than the U.S. Standard Sieve No. 50
Puncture Strength +(unaged geotextile)	ASTM D 4833 Determine puncture resistance as specified in the ASTM	80 pound minimum
Abrasion Resistance	ASTM D 4886 Determine breaking load after abrasion test as specified in ASTM	55 pound minimum Residual Breaking Load in any principal direction
(N/A) Percent Open Area (POA)	(N/A) Specification Paragraph titled, "Determination of Percent Open Area."	(N/A) The percent of open area shall not be less than ( ) percent

+Unaged geotextile is defined as geotextile in the condition received from the manufacturer or distributor.

++All numerical values represent minimum average roll values (i.e., any roll in a lot should meet or exceed the minimum in the table).

DIVISION 2 - SITE WORK

SECTION 02225

EARTHWORK

TABLE OF CONTENTS

PART 1 GENERAL
1.1 SCOPE
1.2 QUALITY CONTROL
1.3 APPLICABLE PUBLICATIONS

PART 2 PRODUCTS (Not Applicable)

PART 3 EXECUTION
3.1 EXCAVATION
3.1.1 General
3.1.2 Embedment of Stone Protection
3.1.3 Collector Ditches - Ditches "A", "B", "C", and "D"
3.1.4 Outlet Ditches - "Ditch 8"
3.2 PLACEMENT OF EXCAVATED MATERIAL
3.3 SLIDES AND SHOALS
3.3.1 Ditch Excavation Areas
3.3.2 Culvert Excavation Areas

SECTION 02225

EARTHWORK

PART 1 GENERAL

1.1 SCOPE

The work covered by this section consists of furnishing all plant, labor, materials, and equipment, and performing all operations necessary for excavation and placement of excavated material therefrom; backfill of culvert excavations; and all other operations incidental thereto. The unit cost for excavation will include the placement of all excavated material for this project with the exception of incidental excavation for the installation of all culverts will not be measured and will be an incidental cost in the culvert by the linear foot.

1.2 QUALITY CONTROL

The Contractor shall establish and maintain quality control for the work specified in this section to assure compliance with the contract requirements and maintain records of his quality control for all construction operations including but not limited to the following:

1) Excavation

Layout, bottom width, grades, slopes, alignment, transitions, disposition of materials, slides.

(2) Culvert Backfill

Layout, limits, grades and sections, compactions, tolerances, suitability of materials.

A copy of these records and tests, as well as the records of corrective action taken, shall be furnished the Government.

1.3 APPLICABLE PUBLICATION

The following publications of the issue listed below, but referred to thereafter by basic designation only, form a part of this specification to the extent indicated by the references thereto:

AMERICAN SOCIETY FOR TESTING AND MATERIALS (ASTM)

D 698	Laboratory compaction Characteristics Using Standard Effort (12,400 ft-lbf/ft^3 (600 kN-m/m^3))
D 1556	Density and Unit Weight of Soil In-Place by the Sand-Cone Method
D 2216	Water (Moisture) Content of Soil and Rock
D 2922	Density of Soil and Soil-Aggregate in Place by Nuclear Methods (Shallow Depth)
D 3017	Water Content of Soil and Rock in Place by Nuclear Methods (Shallow Depth)

PART 2 PRODUCTS (Not Applicable)

PART 3 EXECUTION

3.1 EXCAVATION

3.1.1 General

The Contractor shall excavate and remove all material of whatever nature encountered as may be necessary to produce the theoretical cross sections, bottom grade, and alignment for the collector and outlet ditches, as indicated on the drawings and/or specified herein. Smooth transitions shall be effected between sections at the changes in side slopes and bottom widths. At the downstream and upstream limits of excavation, a smooth transition shall be excavated to existing channel dimensions as indicated on the drawings and also where the channel width changes as indicated on the drawings. The approximate theoretical centerline of the channel improvement is as indicated on the drawings and may be field adjusted by the Contracting Officer to conform to conditions at the time of excavation. Smooth transitions in sections shall be made as indicated on the drawings and/or as directed. Refill of over-excavation shall be required as necessary to meet the above requirements. A tolerance of two-tenths foot above or below the theoretical cross section of the drainage ditches will be allowed provided that abrupt changes do not occur and that drainage is maintained.

3.1.2 Embedment of Stone Protection

The Contractor shall excavate, in areas where riprap is required, in such a manner that the riprap is placed

beneath the theoretical cross section as indicated on the drawings and transition into the existing channel grade at the end limits of riprap in Ditch 8 for the inline culverts, lateral culverts and lateral ditches if the existing grade is lower than the design grade. Tolerances for such excavation shall be plus or minus 1-inch as long as these limits do not exist over 10 percent of the area. A tolerance of four-inches shall be allowed in the horizontal. The top grade tolerance for riprap shall be as specified in SECTION 02542- STONE PROTECTION paragraphs 3.2 and 3.3.2. The finished grade of the adjacent channel excavation shall conform to the finished riprap grade at and in the vicinity of the junctions of these surfaces or to the existing channel grade if lower than the proposed design grade.

3.1.3 Collector Ditches – Ditches "A", "B", "C" and "D"

The Contractor shall cleanout and excavate new collector ditches to the lines and grades as shown on the drawings, to provide for drainage from the relief wells into the outlet Ditch 8. Each collector ditch shall be excavated with 1V on 3H side slopes and varying bottom widths as shown on the drawings, unless otherwise directed by the Contracting Officer. The leveeside top bank of the collector ditch shall be excavated starting at a distance of 5 feet landward of the centerline of the relief well as shown on the drawings. The existing ditches along the toe of the Little River Diversion Channel mainline levee will require filling with semi-compacted material excavated from the collector ditches.

3.1.4 Outlet Ditch – Ditch 8

The Contractor shall enlarge the existing outlet ditch to the lines and grades as shown on the drawings to provide drainage for the collector ditches. Ditch 8 shall be excavated with 1V on 3H side slopes and a 15-foot bottom width as shown on the drawings, unless other wise directed by the Contracting Officer. The existing channel bottom grade on the upper part of Ditch 8 is deeper than the proposed design grade with the exception of a few areas. R-90 riprap shall be placed on filter fabric as shown on the drawings from the confluence of Ditch 8 with Ditches "C" and "D" to the inline culvert in Ditch 8 at baseline station 6+74. Minor excavation will be required to provide the minimum 18-inches of riprap thickness in places.

3.2 PLACEMENT OF EXCAVATED MATERIAL

Excavated material shall be utilized to the extent necessary to backfill the existing ditches along the levee toe, to backfill culvert excavations, to construct access road embankments over culverts, to construct the left bank field road or disposed in the area shown on the drawings. All excavated material will be placed within the right-of-way limits of this project. Upon completion of the culvert backfill, filling of the levee toe ditches and construction of the left bank field road, the remainder of excavated material will be placed in the pond/disposal area. The culvert backfill including road embankment crossings at the culverts and the fill placed along the left top bank of Ditch 8 shall be compacted as specified in Section 02700, paragraph 3.2.2 to the lines and grades as shown on the drawings. The ditch fill along the toe of the levee and fill placed in the disposal area shall be semi-compacted as described in the paragraph below to the lines and grades as shown on the drawings and as specified in the specifications. All excavated material shall be placed in the

dry. This will require removal of free water from the pond/disposal area. The upper free water can be removed by ditching into Ditch 8. The remainder of the free water in the pond/disposal area will require pumping to allow placement of excavated materials in the dry. This includes removal of all rainwater and surface drainage flowing into the area during construction. It will also require favorable ground water readings below the lowest elevation of the pond/disposal area. The disposal area shall be filled to the adjacent natural ground elevations around the pond and sloped to drain. If additional excavated material remains from the project, this material shall also be placed in the disposal area in one foot layers with 1V:10H side slopes on all four sides. Minimum berms of 20-feet along Ditch "D" and 50-feet along Ditch 8 and the south and east right-of way limits shall be maintained. The fill will continue to be semi-compacted in one-foot lifts over the entire area until all excavated material from the project has been placed. The final configuration of the disposal area shall be dressed to provide smooth even surfaces, and in such manner that drainage will result. Sunken logs, stumps, driftwood, and other debris removed concurrently with the excavation shall be disposed of as specified for clearing debris in paragraph 3.2 of SECTION 02114 - CLEARING. The Contractor will be required to haul the excavated material within the right-of-way limits. This will require crossing numerous lateral ditches to place the excavated material in designated areas as shown on the drawings. Drainage shall be maintained at each lateral ditch crossing throughout the length of the haul road and the lateral ditches shall be protected as shown on Drawing 13 upon completion of the project.

Semi-compacted material shall be placed or spread in layers not more than 12 inches in thickness prior to compaction, and then compacted by at least three complete passes of a crawler-type tractor weighing not less than 20,000 pounds and exerting a unit tread pressure of not less than 6 pounds per square inch or by any other compacting equipment approved by the Contracting Officer. A pass shall consist of one complete coverage of the surface of a layer by the treads of the tractor or other approved compacting equipment. If unsuitable material is encountered during excavation that is too wet for semi-compaction, the contractor shall make an effort to dry the material before semi-compacting or the material shall be placed within the bottom three feet of the disposal area (Elevation 325 to 328 ft. NGVD). All excavated material shall be disposed of within the right-of-way limits as indicated on the drawings and/or specified herein. Placement of excavated material shall be such that water will not be impounded and the areas will drain with the natural contours.

3.3 SLIDES AND SHOALS

3.3.1 Ditch Excavation Areas

In case sliding or shoaling occurs in any part of the ditch excavation prior to the final acceptance of the work, the Contractor shall repair such portions of the slides and shoals as the Contracting Officer may direct. In case the slide or shoal is caused through the fault of the Contractor, it shall be repaired without cost to the Government. In case the slide or shoal is due to no fault of the Contractor, the yardage ordered removed will be included in the yardage to be paid for at the contract unit price per cubic yard for

"Excavation". Material removed from the slides and shoals shall be disposed of in the disposal areas in accordance with the provisions of 3.2 above.

3.3.2 Culvert Excavation Areas

In the event of sliding of any part of the excavation specified in 3.1.1 above, or embankment placed in the disposal areas, after completion but prior to acceptance, the Contractor shall, upon written order of the Contracting Officer, repair the slide as directed. In case the slide is caused through the fault of the Contractor, repairs shall be performed without cost to the Government. In case the slide is due to no fault of the Contractor, an equitable adjustment in the contract price will be made for its repair in accordance with CONTRACT CLAUSE entitled "Changes."

--End of Section--

DIVISION 2 - SITE WORK

SECTION 02542

STONE PROTECTION

TABLE OF CONTENTS

PART 1 GENERAL
1.1 SCOPE
1.2 QUALITY CONTROL
1.3 APPLICABLE PUBLICATION

PART 2 PRODUCTS
2.1 STONE
2.1.1 General
2.1.2 Sources and Evaluation Testing
2.1.3 Gradation
2.1.4 Test Method
2.1.5 Gradation Test

PART 3 EXECUTION
3.1 BASE PREPARATION
3.2 PLACEMENT OF FILTER MATERIAL
3.3 RIPRAP
3.3.1 General
3.3.2 Placement

SECTION 02542

STONE PROTECTION

PART 1 GENERAL

1.1 SCOPE

The work provided for herein consists of furnishing all plant, labor, equipment and materials, and performing all operations in connection with the construction of the stone protection, including foundation preparation, placement of riprap, and excavation for placement of stone protection, all in accordance with these specifications and the contract drawings.

1.2 QUALITY CONTROL

The Contractor shall establish and maintain quality control for all stone protection testing and operations to assure compliance with contract requirements, and shall maintain records of the quality control for all construction including but not limited to the following:

(1) Foundation preparation (line and grade).

(2) Inspection at the worksite to ensure use of specified materials.

(3) Riprap gradation and placement.

A copy of these records of inspections and tests, as well as the records of corrective action taken, shall be furnished the Government.

1.3 APPLICABLE PUBLICATION

The following publication of the issue listed below, but referred to thereafter by basic designation only, forms a part of this specification to the extent indicated by the reference thereto:

U.S. ARMY CORPS OF ENGINEERS, HANDBOOK FOR CONCRETE AND CEMENT (CRD)

CRD-C 106	Unit Weight and Voids in Aggregate
CRD-C 107	Specific Gravity and Absorption of Coarse

PART 2 PRODUCTS

2.1 STONE

2.1.1 General

All stone shall be durable material as approved by the Contracting Officer. The sources from which the Contractor proposes to obtain the material shall be selected well in advance of the time when the material will be required. In case an undeveloped source is to be used, the Contractor will be required to show that an ample quantity of material is available before quality tests will be made. Stone for riprap shall be of a suitable quality to ensure permanence in the structure and in the climate in which it is to be used. It shall be free from cracks, seams and other defects that would tend unduly to increase its deterioration from natural causes. The inclusion of objectionable quantities of dirt, sand, clay and rock fines will not be permitted.

2.1.2 Sources and Evaluation Testing

Riprap shall be obtained in accordance with the provisions listed in the special contract requirements for riprap. The Contractor shall submit suitable test reports and service records to show the acceptability of the riprap. If the Contractor proposes to furnish riprap from a source not currently listed, the Contractor will make such investigations as necessary to determine whether acceptable riprap can be produced from the proposed source. Satisfactory service records on work outside the Corps of Engineers will be acceptable. In order for riprap to be acceptable on the basis of service records, riprap of a similar size must have been placed in a similar thickness and exposed to weathering under similar conditions as is anticipated for this contract, and have satisfactorily withstood such weathering for a minimum of twenty years. If no such records are available, the Contractor will make tests to assure the acceptability of the riprap. The tests to which the riprap may be subjected will include petrographic analysis, specific gravity, abrasion, absorption, wetting and drying, freezing and thawing and such other tests as may be considered necessary by the Contracting Officer. The following guidance is provided for use by the Contractor in analyzing a new source of riprap. Riprap that weighs less than 155 lbs/c.f. or has more than 2% absorption will not be accepted unless other tests and service records show that the riprap is satisfactory. The method of testing for unit weight will be CRD-C 106. The method of testing for absorption will be CRD-C 107. Samples shall be taken by the Contractor under the supervision of the Contracting Officer at least 60 days in advance of the time the placing of the riprap is expected to begin. The Contractor has the responsibility to assure the tests are performed in accordance with applicable Corps of Engineers' methods of testing given in the Handbook for Concrete and Cement, and will be performed at an independent, approved testing laboratory. The cost of testing will be borne by the Contractor.

2.1.3 Gradation

Gradation shall conform to the R-90 RIPRAP GRADATION CURVE at the end of this section and format thereof shall be as shown. Neither the width nor the thickness of any piece shall be less than one-third of its length. Stone shall be reasonably well graded between the largest and smallest pieces. The gradation curve plot or graph from each gradation test performed on the R-90 riprap shall fall within the upper and lower limit curves plotted thereon. Gradation limits for R-90 stone are provided as Plate IV. The Contractor shall submit to the Contracting Officer a copy of the plot for each gradation test on the gradation graph provided as Plate VII.

2.1.4 Test Method

Gradation test method shall conform to the requirements of "LMVD Standard Test method for Gradation", which is inserted at the end of this section as PLATE I. An Example Gradation Test Data Sheet, an Example R-90 Gradation and a blank Gradation Test Data Sheet are provided as Plates II, III and VI respectively.

2.1.5 Gradation Test

The Contractor shall perform a gradation test or tests on the riprap at the quarry. At least one gradation test shall be performed. The sample shall be taken by the Contractor under the supervision of the Contracting Officer, shall consist of not less than 25 tons of riprap and shall be collected in a random manner which will provide a sample which accurately reflects the actual gradation arriving at the jobsite. If collected by the truckload, each truckload shall be representative of the gradation requirements. The Contractor shall provide all necessary screens, scales and other equipment, and the operating personnel therefor, and shall grade the samples, all at no additional cost to the Government. For each sample, the Contractor shall record, plot, and submit the gradation data, using the form noted at the end of this section, to the Contracting Officer. The Contractor shall submit to the Contracting Officer a copy of the plot for each gradation test on the gradation graph.

PART 3 EXECUTION

3.1 BASE PREPARATION

Areas on which the geotextile fabric and riprap are to be placed shall be dressed to conform to cross sections shown on the contract drawings and as specified herein. Humps and depressions within the slope lines shall be dressed to provide relatively smooth and uniform surfaces. Immediately prior to placing the filter material, the prepared base will be inspected by the Contracting Officer and no material shall be placed thereon until that area has been approved.

3.2 PLACEMENT OF GEOTEXTILE FABIC

Geotextile fabric for riprap filter shall be placed on the prepared base to the lines and grades as indicated on the contract drawings and in such manner as to avoid damage to the prepared base. Any damage to the surface of the prepared base during placing of the material shall be repaired before proceeding with the work.

3.3 RIPRAP

3.3.1 General

Riprap shall be placed on the prepared base and/or filter fabric within the limits shown on the contract drawings. Riprap shall be as specified in 2.1 above.

3.3.2 Placement

Riprap shall be placed in a manner which will produce a reasonably well-graded mass of rock with the minimum practicable percentage of voids, and shall be constructed, within the specified tolerance, to the lines and grades indicated on the contract drawings. A tolerance of plus 4 inches and minus 2 inches from the required finished surface of the riprap will be allowed provided these extremes do not occur adjacent to each other, and that neither extreme exists over more than 10 percent of the total area. Riprap shall be placed to its full course thickness in one operation and in such manner as to avoid displacing or damaging the filter fabric. The riprap shall be placed in the channel bottom first and then proceed up the slope. The larger stones shall be well distributed and the entire mass of stones in their final position shall be graded to conform to the gradation specified in 2.1.3 above. The finished riprap shall be free from objectionable pockets of small stones and clusters of larger stones. Placing riprap in layers will not be permitted. Placing riprap by dumping it at the top of the slope and pushing it down the slope will not be permitted. The desired distribution of the various sizes of stones throughout the mass shall be obtained by selective loading of the material at the quarry or other source; by controlled dumping of successive loads during final placing; or by other methods of placement which will produce the specified results. The Contractor shall use procedures to insure that the indicated distribution of the various sizes of riprap is maintained throughout placement in the completed structure.

-- End of Section --

LMVD STANDARD TEST METHOD FOR GRADATION

December 14, 1998

A. Select a representative sample (Note #1), weigh and dump on hard stand.

B. Select four specific size stones to use as reference stones (a1, b1, c1, and d1) while performing the "individual weight larger than" test (see example & Note #2). Selected stone sizes should represent an evenly distributed cross section of the various size stones contained within the sample. Reference stone "a1" is typically the largest stone in the sample. Procedure is similar to the standard aggregate gradation test for "individual weight retained".

C. Determine the largest size stone in the sample. (100% size)

D. Separate the sample into piles starting with the stones that are larger than reference stone "b1" and proceeding to the smallest stones. The first pile should contain all stones larger than reference stone "b1" and smaller than "a1", the largest stone. Pile two should contain all stones larger than "c1" and smaller than "b1". Pile 3 should contain all stones larger than "d1" and smaller than "c1". The remaining pile should contain all stones smaller than "d1". Use reference stones for visual comparison in separating the obviously "larger than" stones. Stones that appear close to a specific size reference stone must be individually weighed. If a stone is heavier than the specific size reference stone, it should be place in the pile containing the stones larger than the reference stone. Weigh each pile as a whole or cumulatively adding each stone in the individual piles.

E. Paragraph D above will result in "individual weight retained" figures. Calculate individual percent retained (heavier than) and cumulative percent retained and cumulative percent passing (lighter than). Record test results on the "Gradation Test Data Sheet" (plate V) as shown on example plate III. Plot percent finer by weight, along with the specification curves on ENG Form 4055.

F. See plate V and plate VI for a blank "Gradation Test Data Sheet" and a blank ENG Form 4055. Plates VII, VIII, and IX have been provided for the convenience of the contractor and can be used as necessary. These three plates have the upper and lower specification limits for "R-90", "R-200", and "R-650" pre-plotted on ENG Form 4055.

NOTES

1. Sample Selection. The most important part of the test and the least precise is the selection of a representative sample. No "standard" can be devised; larger quarry run stone is best sampled at the shot or muck pile by given direction to the loader; small graded riprap is best sampled by random selection from the transporting vehicles. If possible, all parties should take part in the sample selection and agree before the sample is run that the sample is representative.

2. Selection of Size for Separation. It is quite possible and accurate to run a gradation using any convenient sizes for the separation, without reference to the specifications. However, it is usually more convenient to select weights from the gradation limits, such as the 90 lbs., 40 lbs., 20 lbs., and 5 lbs. as shown in the following "R-90"example. After the test is plotted on ENG 4055 and a curve drawn, the gradation limits from the specifications shall be plotted.

(EXAMPLE)

Table From Specifications

TABLE I
(For Riprap "R 90")

Percent Lighter by Weight (SSD)	Limits of Stone Weight, lb.
100	90-40
50	40-20
15	20-5

(EXAMPLE)

G R A D A T I O N T E S T D A T A S H E E T

Quarry AAA Quarry Inc. . Stone Tested R-90 .

Date of Test 24 May 79 . Testing Rate _____

T E S T R E P R E S E N T S

Contract No.	District	Tons
DACW66-79-C-0005	Memphis	16
	TOTAL	16

G R A D A T I O N

Stone Size (lbs.)	Individual Weight Retained	Individual % Retained	Cumulative %Coarser	Cumulative %Finer	Specification % Finer by wt
90 "a1"	0	0	0	100	100
40 "b1"	9600	30	30	70	100-50
20 "c1"	11200	35	65	35	50-15
5 "d1"	8000	25	90	10	<15
< 5 "d1"	3200	10	100	-	
Total Weight	32000lbs				

Remarks: LARGEST STONE SIZE = 78 LBS .

I Certify that the above stone sample is representative of the total tonnage covered by this test report.

Contractor Representative: Representative's Name and Signature .

Government Representative: Representative's Name and Signature .

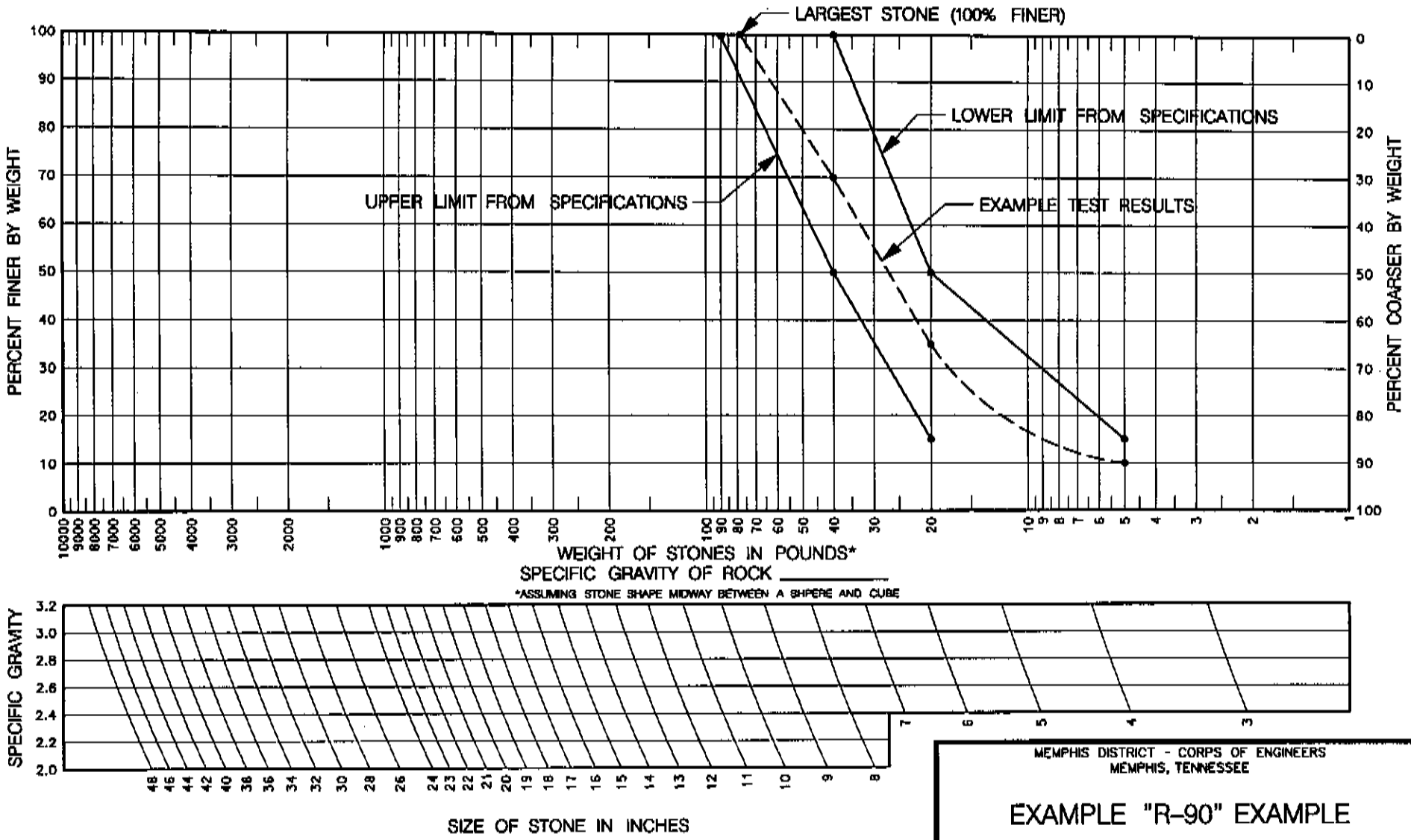

MEMPHIS DISTRICT - CORPS OF ENGINEERS
MEMPHIS, TENNESSEE

EXAMPLE "R-90" EXAMPLE

DACW66-79-C-0005
PROJECT: NEW FRANKLIN DITCH DATE: 24 MAY 79

RIPRAP GRADATION CURVES

PLATE III

ENG FORM 4055
APR 67

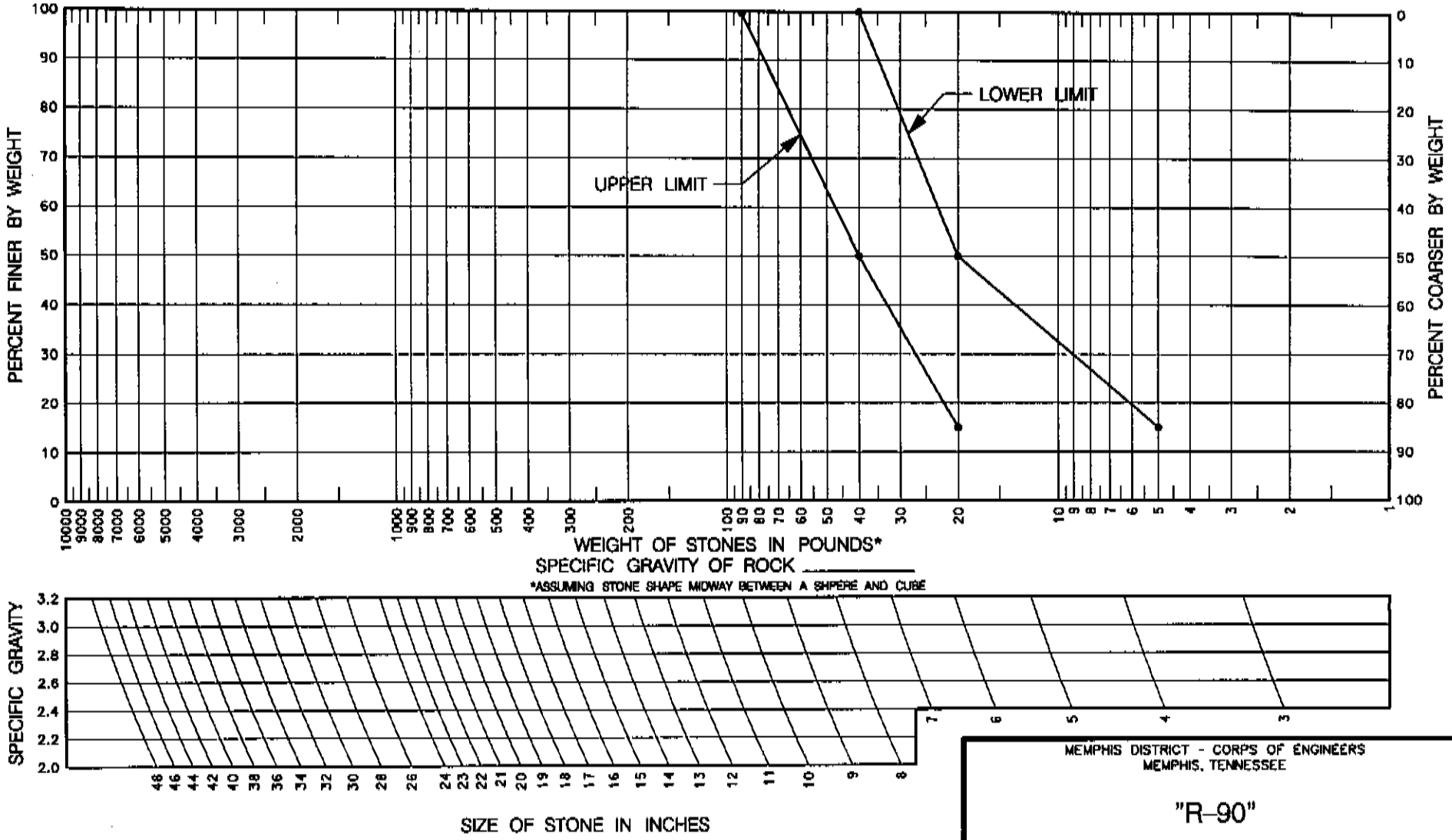

MEMPHIS DISTRICT - CORPS OF ENGINEERS
MEMPHIS, TENNESSEE

"R-90"

PROJECT: _____ DATE: _____

RIPRAP GRADATION CURVES

PLATE IV

ENG FORM 4055
APR 67

G R A D A T I O N T E S T D A T A S H E E T

Quarry _____ Stone Tested _____

Date of Test _____ Testing Rate _____

T E S T R E P R E S E N T S

Contract No.	District	Tons
	TOTAL	

G R A D A T I O N

Stone Size (lbs)	Individual Weight Retained	Individual % Retained	Cumulative %Coarser	%Finer	Specification % Finer by wt
Total Weight					

Remarks: _____

I Certify that the above stone sample is representative of the total tonnage covered by this test report.

Contractor Representative _____

Government Representative _____

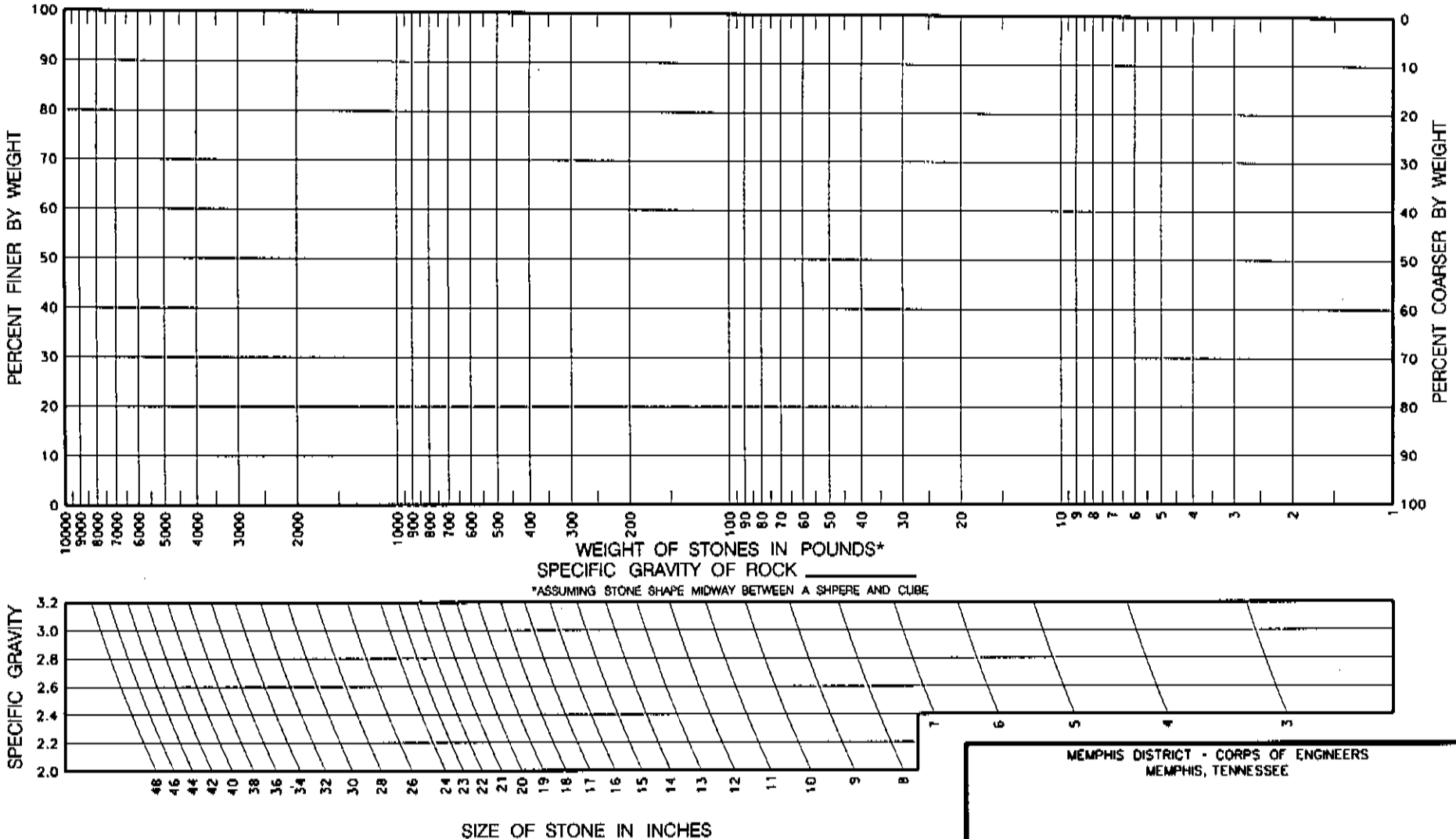

MEMPHIS DISTRICT - CORPS OF ENGINEERS
MEMPHIS, TENNESSEE

PROJECT: _____ DATE: _____

RIPRAP GRADATION CURVES

PLATE VI

ENG FORM 4055
APR 67

7ENG4055.dgn 08/30/2004 03:23:59 PM

DIVISION 2 – SITE WORK

SECTION 02546

AGGREGATE SURFACING

TABLE OF CONTENTS

PART 1 GENERAL
1.1 SCOPE
1.2 QUALITY CONROL
1.2.1 Subgrade
1.2.2 Material
1.2.3 Placement
1.3 APPLICABLE PUBLICATIONS

PART 2 PRODUCTS
2.1 AGGREGATES
2.1.1 Coarse Aggregate
2.1.2 Fine Aggregate
2.1.3 Gradation
2.2 SAMPLING AND TESTING
2.2.1 General
2.2.2 Contractor Testing
2.2.3 Government Testing

PART 3 EXECUTION
3.1 CLEARING AND DEBRIS REMOVAL
3.2 USE OF HAUL ROADS
3.3 SUBGRADE
3.4 PLACEMENT
3.5 MAINTENANCE

SECTION 02546

AGGREGATE SURFACING

PART 1 GENERAL

1.1 SCOPE

The work covered by this section consists of furnishing all plant, labor, materials, and equipment, and performing all operations necessary for preparation of the existing gravel surface and construction of compacted aggregate surface in areas identified on the plans. These areas are the first four inline culverts listed in the Replacements Culverts Table on Drawing 12. Each culvert location will require approximately 80 linear feet of compacted gravel to the width and thickness shown on the typical drawing

1.2 QUALITY CONTROL

The Contractor shall establish and maintain quality control for the work specified in this section to assure compliance with contract requirements and maintain records of his quality control for all construction operations including but not limited to the following:

1.2.1 Subgrade
Location, preparation.

1.2.2 Materials
Material delivered to the site shall conform to the specifications.

1.2.3 Placement
Width, thickness, distribution, compaction, final grading, and maintenance.

A copy of these records and tests, as well as the records of corrective action taken, shall be furnished the Government.

1.3 APPLICABLE PUBLICATIONS

The following publications of the issues listed below, but referred to elsewhere in this section by basic designation only, form a part of the specification to the extent indicated by the references thereto:

AMERICAN SOCIETY OF TESTING AND MATERIALS (ASTM) PUBLICATIONS

D 422	Particle-Size Analysis of Soils

D 4318	Liquid Limit, Plastic Limit, and Plasticity Index of Soils

PART 2 PRODUCTS

2.1 AGGREGATES

Aggregate for resurfacing shall be composed of sand-clay-gravel mixtures; gravel or stone screenings; crusher run coarse aggregate consisting of gravel; or any combination of such materials which conforms to specified requirements. All material shall be free from organic matter and lumps or balls of clay. The material shall conform to the requirements as specified in 2.1.1 and 2.1.2 below, and shall conform to the gradation specified in 2.1.3 below as determined by ASTM D 422. All aggregate surfacing furnished under this contract shall comply favorably with representative samples as to quality, gradation, and moisture content.

2.1.1 Coarse Aggregate

Coarse aggregate is defined as aggregate retained on the No. 10 (2.00 mm) sieve. Coarse aggregate shall consist of hard, durable particles or fragments of stone or gravel. Materials that are soft, pliable, or subject to rapid deterioration when exposed to weathering shall not be used.

2.1.2 Fine Aggregate

Fine aggregate is defined as aggregate passing the No. 10 (2.00mm) sieve. Fine aggregate shall consist of natural or crushed sand, and also shall include fine mineral particles passing the No. 200 (0.075 mm) sieve. The fraction of the material passing the No. 200 (0.075 mm) sieve shall be no more than two-thirds that of the fraction passing the No. 40 (0.425 mm) sieve. That portion of the aggregate passing the No. 40 (0.425 mm) sieve shall have a liquid limit of not more than 35 and a plasticity index of not less than 6 nor more than 15, as determined by ASTM D 4318.

2.1.3 Gradation

Aggregate surface material shall conform to the following gradation when it is delivered to the job site and before it is placed on the roadway:

U.S. Standard Sieve	Permissible Limits Percentage by Weight, Passing
3”	100
1-1/2”	95-100
¾”	65-100
3/8”	40-80
No. 4	30-60
No. 10	20-50
No. 40	15-35
No. 200	5-15

2.2 SAMPLING AND TESTING

2.2.1 General

Representative samples for testing of the material shall be taken by the Contractor in the presence of the Contracting Officer or his representative. All costs of the sampling and testing, except as specified in 2.2.3 below, shall be borne by the Contractor and no separate payment will be made therefor.

2.2.2 Contractor Testing

Prior to delivery of any material to the job site, the material shall be tested for compliance with the specifications by an approved independent testing laboratory. Such tests shall be performed before each 5,000 cubic yards of material is delivered to the job site under this contract, and in the event a noticeable change in the materials is observed during placement, such testing shall be performed at the direction of the Contracting Officer regardless of the quantity of material delivered. Certified results of the tests shall be submitted to the Contracting Officer for review before the next 5,000 cubic yards of material is delivered to the job site. When a noticeable change is observed during placement of the material, samples shall be obtained from the delivery truck and a gradation test shall be performed by an approved testing laboratory. If this test fails to meet the requirements, then the questionable material shall be removed from the job site.

2.2.3 Government Testing

At the same time that samples for Contractor testing as specified in 2.2.2 above are taken, the Contractor shall take samples for assurance testing to be performed by and at the expense of the Government. The Contractor shall deliver such samples to Caruthersville Area Office, 706 Truman, Caruthersville, Missouri 63830. Notice of assurance sample deliveries shall be given to the Contracting Officer's Representative prior to delivery.

PART 3 EXECUTION

3.1 CLEARING AND DEBRIS REMOVAL

All grass, weeds, sod, and other debris shall be cleared from the subgrade prior to gravel placement. Debris resulting from clearing operations shall be removed from the levee district right-of-way, in compliance with all Federal, State, and local laws. The side slopes shall be disturbed the least amount practicable, and shall be returned to a smooth slope upon completion of clearing and resurfacing operations.

3.2 USE OF HAUL ROADS

The Contractor shall acquaint himself with load limits and other regulations applicable to his use of public roads and/or highways for deliveries to be made under this contract and shall comply with all such load limits and regulations. Haul roads on the levee or and its appurtenances which are used by the Contractor shall be maintained by him in a condition satisfactory for vehicular traffic. The Contractor shall not operate hauling equipment on the levee slopes except at ramps.

3.3 SUBGRADE

The subgrade shall be symmetrical about the centerline of the roadway and shall be prepared as indicated on the drawings and so that drainage will occur each way from the centerline. Subgrades for roadways shall be graded and smooth. All potholes and ruts in the existing roadway surface shall be repaired in advance of resurfacing by removing any soft material in and/or adjacent to the potholes and ruts. Resurfacing material shall be placed and compacted until the damaged area is restored to the same elevation as the surrounding undamaged road surface. The potholes and ruts shall be dry at the time of repair.

3.4 PLACEMENT

(1) Aggregate shall be placed and spread upon the subgrades of roadway surfaces in the amount required to produce a pavement with width and compacted thickness as indicated on the drawings. A tolerance of plus 2 tenths and minus 0 tenths from the required finish surface of the aggregate resurfacing will be allowed provided these extremes do not occur adjacent to each other, and neither extreme exists over more than 10 percent of the total area. The aggregate material shall be placed in layers of uniform thickness not to exceed 9 inches before compaction. Each layer shall be compacted by at least four passes of a pneumatic tired roller having a tire pressure of 35 to 40 pounds per square inch and a gross weight of not less than 20,000 pounds or by other approved compacting equipment which will obtain comparable compaction. A pass of the roller shall consist of the completed coverage of the surface by the roller. The compaction passes of the roller shall not be performed when the material is so wet that it is displaced under the roller or when the material is too dry for proper bonding. The placement shall be commenced at the nearest point of delivery of the resurfacing material to a reach of roadway and shall be carried continuously away from such point unless otherwise authorized by the Contracting Officer. Placing of aggregate will not be allowed when the roadway surface, in the opinion of the Contracting Officer, is too wet to place aggregate. No unspread aggregate shall be left in a piled condition overnight. Reaches of resurfacing which are no longer needed for haul roads for supplying the aggregate shall be graded and dressed to provide a slope each way from the centerline. In the event aggregate is hauled over rolled portions of the resurfacing, such portions shall subsequently be graded, dressed and rolled again as specified hereinabove at no additional cost to the Government. The resurfacing shall be maintained in an acceptable condition until acceptance.

(2) By the end of each workday, all aggregate surfacing hauled and placed on the roadway shall be spread and blended into the existing roadway surface as specified in subparagraph (1) above. At no time under this contract shall aggregate surfacing be dumped and left at the end of the workday without being placed as specified above.

3.5 MAINTENANCE

The Contractor shall maintain the aggregate surface in a good and satisfactory condition until acceptance. The Contractor shall correct any deficiencies in width and thickness and shall remove, dispose of as described in paragraph 3.1 above, and replace, without additional compensation, any deficient material placed in the work.

-- End of Section --

DIVISION 2 – SITE WORK

SECTION 02700

CULVERT INSTALLATION

TABLE OF CONTENTS

PART 1 GENERAL
1.1 SCOPE
1.2 QUALITY CONTROL
1.3 APPLICABLE PUBLICATION

PART 2 PRODUCTS
2.1 MATERIALS
2.1.1 Pipe

PART 3 EXECUTION

3.1 INSTALLATION
3.1.1 Culvert Pipe
3.2 BACKFILL
3.2.1 General
3.2.2 Compacted Backfill

SECTION 02700

CULVERT INSTALLATION

PART 1 GENERAL

1.1 SCOPE

The work covered by this section consists of furnishing all labor, equipment, and materials, and performing all operations necessary for removal of the existing culvers and/or wooden bridge and for the installation of new corrugated metal pipe culverts, all as indicated on the drawings, and/or specified herein. The wooden bridge will be disposed of as stated in Section 02114, 3.2 Disposal of Cleared Material. The existing culverts will become the property of the Little River Drainage District and left within the right-of-way of the project limits. Care shall be taken by the Contractor to minimize damage to the existing culverts during removal, handling and storage of each culvert removed.

1.2 QUALITY CONTROL

The Contractor shall establish and maintain quality control for the work specified in this section to assure compliance with contract requirements and maintain records of his quality control for all construction operations including but not limited to the following:

(1) Materials. Review, prior to submittal, of certificates for compliance with specification requirements.

(2) Installation. Length, type, location, alignment, grade, slope, foundation bedding, coupling bands, repair of damaged areas.

(3) Backfill. Thickness of layers, maintenance of culvert alignment, compaction, elevation.

A copy of these records and tests, as well as the records of corrective action taken, shall be furnished the Government.

1.3 APPLICABLE PUBLICATIONS

The following publications of the issues listed below, but referred to thereafter by basic designation only, form a part of this specification to the extent indicated by the reference thereto:

American Society for Testing and Materials (ASTM) Publications.

A 760/A760M95-b	Corrugated Steel Pipe, Metallic-Coated for Sewers and Drains
A 849	Post Applied Coatings, Pavings, and Linings for Corrugated Steel Sewer and Drainage Pipe
D 698	Compaction Characteristics of Soil Using Standard Effort (12,400 ft-lbf/ft3 (600kN-m/m3))
D 1556	Density and Unit Weight of Soil in Place by the Sand-Cone Method
D 2922	Density of Soil and Soil-Aggregate in Place by Nuclear Methods (Shallow Depth)

PART 2 PRODUCTS

2.1 MATERIALS

2.1.1 Pipe

The zinc coated (Galvanized) corrugated metal pipe culvert shall conform to the requirements of ASTM A 760, for Type I and ASTM A 849, for fully coated using Class A material. The manufacturer's certified statement as to quality will be accepted in lieu of performing the prescribed tests. Certificates required for demonstrating proof of compliance shall be in compliance with SPECIAL CONTRACT REQUIREMENTS SP 5. The pipe shall be fabricated from 0.079 inches thick sheets. Coupling bands for joints may be 0.064 inches thick or heavier and shall be installed as recommended by the materials manufacturer except as specified herein. Coupling bands shall be coated as specified hereinabove for the pipe and shall have corrugations, not projections, that mesh with the pipe corrugations, and if helical corrugations are used, each length of helical pipe used shall have a minimum 12-inch length of annular corrugations at each end. All installation hardware shall be as recommended by the materials manufacturer. Inlet and outlet sections shall be unjointed sections at least 20 feet in length. The four inline culvert locations shall require factory cuts of 1V:2.5H slopes on the CMP pipe before placing the asphalt coating.

PART 3 EXECUTION

3.1 INSTALLATION

3.1.1 Culvert Pipe

The required length for each culvert shall be determined by the Contractor and verified with the Contracting Officer prior to ordering each culvert. The pipe shall be placed at the location indicated on the drawings. Installation of the pipe shall be accomplished in the dry. The pipe shall be bedded on a

smooth surface with invert elevation as determined in the field. Joints shall be carefully made by the material manufacturer's standard method, subject to the provisions of 2.1.1 above. Pipe shall be handled with care so that damage to the coating will be minimized. Coupling band rods, if applicable, and damaged areas of pipe shall be coated with approved asphaltic cement prior to placement of backfill, and in case damaged areas are at joints, such areas shall be coated prior to making the joint. The Contractor shall perform such excavation as is necessary for the installation of culvert, all as indicated on the drawings. Excavated materials shall be utilized in the backfill or embankment or shall be placed or disposed of as specified in SECTION 02225, paragraph 3.2.

3.2 BACKFILL

3.2.1 General

Backfill shall be placed around and over the culvert pipes to the line and grade indicated on the drawings, and/or as directed by the Contracting Officer. Backfill material shall be obtained from the required excavations, and shall be free from roots, muck, brush and other objectionable matter. Material used within 2 feet of the pipes shall consist of cohesive material. Cohesive soil materials include clayey gravels, sand-clay mixtures, clays, and clayey silt mixtures. The Contractor will be required, when directed, to remove any materials which the Contracting Officer considers to be objectionable in the backfill. Frozen material shall not be placed in the backfill nor shall material be placed upon frozen foundations. Each culvert location shall be excavated 18-inches below each pipe and cohesive material shall be compacted as stated in 3.2.2 below. Riprap shall be placed at both the outlet and inlet ends of the culverts as shown on the drawings and as specified in Section 02542.

3.2.2 Compacted Backfill

Backfill material within 2 feet of the pipe shall be placed concurrently on each side of the pipe in layers not more than 6 inches in thickness prior to compaction. In placing and compacting the material, care shall be taken to insure that the backfill is rammed tight against the pipe at all points. Compaction within 2 feet of culvert pipe shall be accomplished by the use of approved mechanical hand tampers. Each layer of backfill shall be compacted to a density of at least 95 percent of the laboratory density obtained by the standard density test (ASTM D 698), Method D. The field density determination shall be by the Sand-Cone Method (ASTM D 1556) or by the Nuclear Method (ASTM D 2922). The moisture content after compaction shall be within the limits of 2 percentage points above optimum and 3 percentage points below optimum moisture content as determined in accordance with ASTM D 698. The materials may require moistening or aerifying as necessary to provide the above specified moisture content. The Contractor shall perform standard compaction tests to determine optimum water content and maximum densities and will perform field density and water content tests as assurance checks; the Contractor shall perform field density and water content tests on each layer of material placed to assure that proper compaction is being achieved.

--End of Section--

DIVISION 2 - SITE WORK

SECTION 02708

RELIEF WELLS

TABLE OF CONTENTS

PART 1 GENERAL
1.1 SCOPE
1.2 QUALITY CONTROL
1.3 APPLICABLE PUBLICATIONS

PART 2 PRODUCTS
2.1 WELL SCREEN
2.1.1 General
2.1.2 Stainless Steel
2.1.2.1 General
2.1.2.2 Coupling
2.1.3 Bottom Plug for Well Screen
2.2 RISER PIPE
2.3 GRAVEL PACK
2.4 SAND
2.5 GROUT
2.6 OUTLET FOR RELIEF WELL
2.6.1 Well Guard
2.6.2 Cover Plate
2.6.3 Check Valves
2.6.4 Angular Face Ring
2.7 RELIEF WELL GUARD POSTS
2.8 CONCRETE
2.9 DRILLING FLUID ADDITIVE

PART 3 EXECUTION
3.1 GENERAL - NEW RELIEF WELLS
3.1.1 Shop Drawings and Field Procedures
3.1.2 Location
3.1.3 Depth-of-Well
3.2 PILOT HOLES
3.2.1 Location
3.2.2 Method
3.2.3 Intervals
3.2.4 Sampling

3.2.5 Testing
3.2.6 Documentation
3.3 DRILLING
3.3.1 General
3.3.2 Reverse Rotary Method
3.3.3 Temporary Casing
3.3.4 Obstructions Encountered
3.4 INSTALATION OF RISER PIPE AND SCREEN
3.4.1 Assembly
3.4.2 Joints
3.4.3 Installation
3.4.4 Plumb and Alignment
3.5 PLACING GRAVEL PACK
3.5.1 General
3.5.2 Tremie Pipe
3.5.3 Tremie Guide
3.5.4 Gravel Pack Placement (Gravity)
3.5.5 Gravel Pack Placement (Pumping)
3.5.6 Temporary Casing
3.6 INSTALLATON OF ANGULAR FACE RING
3.7 INSTALLATION OF CHECK VAVLE
3.8 DEVELOPMENT
3.8.1 General
3.8.2 Chemicals
3.8.3 Surge Blocks
3.8.4 Procedure
3.8.4.1 General
3.8.4.1 Surge Block Process
3.8.4.1 Intermittent Pumping
3.8.5 Data
3.9 BACKFILLING
3.10 PUMPING TESTS
3.10.1 General
3.10.2 Equipment
3.10.2.1 Pump
3.10.2.2 Water Level
3.10.2.3 Flow Meter
3.10.2.4 Sand Infiltration Measurement
3.10.3 Data
3.10.4 Procedure
3.10.5 Records
3.11 INSTALLATIION OF GUARD POSTS
3.12 PLUGGING ABANDONED HOLES
3.13 EMERGENCY CLOSURE OF WELLS DURING CONSTRUCTION

SECTION 02708

RELIEF WELLS

PART 1 GENERAL

1.1 SCOPE

The work provided for herein consists of furnishing all plant, labor, material and equipment, and performing all operations required for proper execution of the relief well work as specified herein and/or indicated on the drawings. Such work includes installation of new relief wells; relief well outlets; guard posts; pump testing new wells; pilot hole borings and all work incidental thereto.

1.2 QUALITY CONTROL

(1) General

The Contractor shall perform the inspection, sampling and testing, corrective actions, and reports required to substantiate his compliance with the technical provisions of this specification. Responsibility for quality control of relief well construction, rehabilitation, sampling and testing procedures shall be the Contractor's. The Contractor's quality control organization shall have personnel sufficient in number to monitor at all times the relief well activities.

(2) Inspection

The Contractor's quality control organization shall be responsible to observe and control for compliance to technical specifications all relief well operations including but not limited to the following: survey layout, materials, drilling method, joints, bottom plug, materials storage, well pipe assembly and installation, backfilling, cleaning, development, pumps, pump testing, installation of outlets, chemical treatment, environmental compliance and safety. Completed relief wells shall be protected against damage and contamination. The detailed inspection may be assigned to the construction foreman supervising the work.

(3) Sampling and Testing

The Contractor's quality control organization shall verify that the well pipe material and manufacturing conforms to the specifications before delivery to the project. The particle size distribution of the gravel pack shall be tested by laboratories validated by U.S Army Corps of Engineers using the U. S. Standard Sieves described in paragraph 2.3. Two representative samples shall be taken from each truck load of gravel pack delivered to the project site and shall be tested for particle size distribution. The labs performing the particle size distribution tests shall be validated and meet all requirements as specified in Section 01451 paragraph 3.7.2

Testing Laboratories. The gravel pack material being tested shall be stored separately from the approved stockpile until results of the gradation test results are obtained and indicate that the gravel pack meets the specified requirements. Only approved gravel pack material will be allowed for placement in the relief wells. The laboratory test procedure shall conform to that presented in EM 1110-2-1906, Appendix V, a copy of which will be furnished the Contractor upon request. A pumping and sand infiltration test and alignment and plumbness test shall be performed in accordance with technical provisions herein specified.

(4) Action Required

When quality control monitoring or testing detects non-conformance with specifications, corrective action shall be taken immediately. The details of the irregularities and the actions taken to correct them shall be reported immediately to the representative of the Contracting Officer and included in the daily Quality Control report. Also, corrective action shall include steps taken to prevent recurrence of the irregularity.

(5) Reports

Reports shall include, for each new relief well, form LMM 650 Jan ‘64”Field Boring Log”, WES Form 797 "Relief Well Installation Report,” WES Form 796, "Relief Well Pumping Test Report", “Well Development Data Sheet” and the completed form for the sanding test results. The gradation curves for the gravel pack material shall be submitted on ENG Form 2087, "Gradation Curves" with all gravel pack filter material being approved before placing around each relief well. The Contractor shall provide sieve analysis data through a Microsoft Excel spreadsheet provided by the Memphis District for each boring. A copy of each report form is attached at the end of this section. The elevation of changes between materials on these reports shall be to the nearest 0.1 foot. Data concerning installation and development of the relief well shall be included in the report on relief well installation. The pump test report shall include the time pumped and rate of flow, the draw down response data of the pumped well, and the amount of sand produced by the well during pumping. The reports shall be completely filled out and shall be submitted to the Contracting Officer as part of the daily quality control report specified in the Special Contract Requirements. A copy of these records and tests as well as the records of corrective action taken, shall be furnished to the Government.

(6) Licenses and Permits

The contractor shall be responsible for obtaining and having on site all licenses and permits required to meet all state and/or federal requirements needed to install relief wells in the particular state or states for the proposed relief wells as stated for this project. Submit a copy of each permit and license to the Contracting Officer for information.

1.3 APPLICABLE PUBLICATIONS

The following publications of the issues listed below, but referred to elsewhere in this section by basic designation only, form a part of this specification to the extent indicated by the references thereto:

American Society for Testing and Materials (ASTM).

A 53-90b	Pipe, Steel, Black and Hot-Dipped, Zinc-Coated, Welded and seamless
A 276-94b	Stainless and Heat Resisting Steel Bars and Shapes
A 312/A312M-94b	Seamless and Welded Austenitic Stainless Steel Pipes
A 555/A555M-94	General Requirements for Stainless Steel Wire and Wire Rods
C-117-95	Materials Finer than 75-um (No. 200) Sieve in Mineral Aggregates by Washing
C-136-95a	Sieve Analysis of Fine and Coarse Aggregates
D-1586-84	Penetration Test and Split-Barrel Sampling of Soils (R 1992)

AMERICAN SOCIETY FOR TESTING AND MATERIALS (ASTM) WITH CORRESPONDING CRD STANDARD INDICATED WHERE AVAILABLE.

C 31-96 (CRD-C 11)	Making and Curing Concrete Test Specimens in the Field
C 33-93 (CRD-C 133)	Concrete Aggregates
C 39-96 (CRD-C 14)	Compressive Strength of Cylindrical Concrete Specimens
C 94-96 (CRD-C 31)	Ready-Mixed Concrete
C 150-92 (CRD-C 201)	Portland Cement
C 171-97 (CRD-C 310)	Sheet Materials for Curing Concrete
C 172-90 (CRD-C 4)	Sampling Freshly Mixed Concrete

C 231-97	Air Content of Freshly Mixed Concrete by the Pressure Method

The Aluminum Association (AA) Specifications.

Specifications for Aluminum Structures Available from: Aluminum Association, Inc., 818 Connecticut Avenue, NW Washington, D.C. 20006

Federal Specifications (Fed. Spec.).

TT-E-489H	Enamel, Alkyd, Gloss Low VOC content

Steel Structures Painting Council specifications (SSPC).

SSPC-Paint 25	Red Iron Oxide, Zinc Oxide, Raw Linseed Oil and Alkyd Primer

Department of the Army, Corps of Engineers, Engineer Manual.

EM 1110-2-1906	Laboratory Soils Testing, 1 May 1980

PART 2 PRODUCTS

2.1 WELL SCREEN

2.1.1 General

Well screen shall be stainless steel and shall be of the dimensions hereinafter specified. The inside diameter of the screen shall be not less than 8 inches for 8-inch wells and not less than 10-inches for 10-inch wells. Screen openings shall be uniform in size and pattern, and shall be spaced approximately equally around the circumference of the pipe. Before installation, all well screens shall be approved by the Contracting Officer.

2.1.2 Stainless Steel

2.1.2.1 General

Stainless steel well screen shall be a non-clogging wire-wrapped continuous slot strainer. All pipes, rods, bars, and wire shall be stainless steel conforming to ASTM A 276, A 312 or A 555 for Grade TP-304 as applicable. The width of the clear space between the wire wrappings for the 8-inch wells shall be (0.08 inch) and shall provide a total opening of not less than 135 square inches per foot of 8-inch diameter screen. The screen shall have a minimum clear inside diameter of 8 inches. The width of the clear space between the wire wrappings for the 10-inch wells shall be 0.08 inch and shall provide a total opening of not less than 167 square inches per foot of 10 inch diameter screen. The screen shall have a minimum clear inside diameter of 10 inches.

2.1.2.2 Coupling

Couplings for stainless steel well screen shall consist of the same material as the well screen and shall be welded joint couplings. Connections between the well screen and the riser pipe shall be threaded connections or welded joint couplings. If welded connections are used, end fittings for stainless steel well screens shall be suitably beveled and furnished with welding rings of the same alloy as the well screen and riser pipe. Welding rings that join well screen to riser pipe shall adequately provide for the transition from well screen to riser pipe. Joints in riser pipe shall be single or double bevel welded and shall have strengths equal to the pipe being joined. Deposited weld metal shall have a resistance to corrosion equal to or greater than that of the pipe used. Joints shall be designed and constructed to support the weight of the screen and/or pipe as it is lowered into the hole. Welding shall be performed by a certified welder using approved welding rods, and performed in a manner which will not cause the screen sections to deviate from a straight alignment.

2.1.3 Bottom Plug for Well Screen

The bottom plug for each well screen shall be made of the same material and at least the same minimum thickness as the riser pipe. Plugs shall be the same diameter as the outside of the screen and fastened to the bottom of the screen in an approved manner.

2.2 RISER PIPE

The relief well riser pipe material and method of manufacture shall conform to the requirements specified in paragraph 2.1.2 above and shall be schedule 10 wall thickness. The relief well riser pipe shall have a minimum inside diameter of either 8-inches or 10-inches. Discharge details shall be as shown on the drawings. Couplings to the well screen and between riser pipe sections shall be as specified for well screen pipes.

2.3 GRAVEL PACK

Material for the gravel pack around the riser pipes and screens shall be washed gravel composed of hard, tough, durable particles free from adherent coating. Limestone, dolomite, or carbonate materials are not acceptable materials. The gravel pack material shall contain neither detrimental quantities of vegetable matter nor soft, friable, thin, or elongated particles. The gravel pack shall meet the following gradation requirements:

U. S. Standard Sieve No.	Percent by Weight Passing
3/8 inch	100
No. 3	77-100
No. 4	58-80
No. 6	35-60
No. 8	15-42
No. 10	9-32
No. 14	0-10
No. 20	0-2

Materials shall be uniformly graded between the limits specified above. All points on individual grading curves obtained from representative samples of gravel pack material shall lie between the boundary limits as defined by smooth curves drawn through the tabulated grading limits plotted on a mechanical analysis diagram. The individual grading curves within these limits shall not exhibit abrupt changes in slope denoting skip grading, scalping of certain sizes or other irregularities that would be detrimental to the proper functioning of the gravel pack. For each relief well the gravel pack material and its gradation shall be approved before it is placed. The filter gravel pack material shall be pre-approved by the Contracting Officer from the source quarry and meet the requirements of these specifications before individual truck loads of material shall be delivered to the project site.

2.4 SAND

Sand placed on top of the gravel packing shall conform to fine aggregate for concrete as specified in ASTM C 33.

2.5 GROUT

Grout mix placed on top of the sand shall consist of one bag (94 lbs) of cement to 5 gallons of water. It shall have a bentonite-cement ratio of 1 part bentonite to 30 parts cement.

2.6 OUTLET FOR RELIEF WELL

2.6.1 Well Guard

Each outlet shall consist of a metal well guard as shown on the drawings. The well guard shall consist of a section of 20-inch outside diameter stainless steel well screen constructed using the wire-wrapped continuous slot design method. The well guard shall be fabricated by circumferentially wrapping a triangularly shaped wire around a circular array of internal bars on one-inch centers. The wire configuration must produce inlet slots with sharp outer edges, widening inwardly so as to minimize clogging. For maximum collapse strength each juncture between the horizontal wire and the vertical bars will be fusion welded under water by the electrical resistance method. The minimum wire/weld strength shall be 650 lb. The well guard and attached fittings shall be completely fabricated of stainless steel conforming to ASTM A 555, Grade TP 304. The width of the clear space between the wire wrappings shall be 0.250 inch. The wire wrappings shall be composed of "190" wire. The surface of the well guard shall be free of pits, slag and discoloration. All welds shall be ground and brushed.

2.6.2 Cover Plate

The cover plate and fittings shall be fabricated of stainless steel conforming to ASTM A 276, Grade TP 304. The plate shall be 1/4-inch in thickness and shall have a diameter of 21 inches. The cover plate shall be attached to the well guard using 3/8-inch socket head cap screws. A slotted lug shall be welded on the well screen to serve as a hinge and to prevent removal of the cover plate.

2.6.3 Check Valves

The aluminum check valves shall be fabricated in accordance with details shown on the drawings and as specified herein. The aluminum parts, at the Contractor's option, may be any one or a combination of aluminum alloys 3005-H14, 6061-T4, or T6. Rods shall be carefully bent to avoid flattening at the bends. The seat for the check valve is to be constructed of two 1/4-inch aluminum plates and a 1/4-inch thick silicone sponge rubber gasket, all bolted together as indicated on the drawings. Drilling or punching the aluminum plates and silicone sponge rubber gasket shall form the bolt holes. The silicone sponge rubber gasket shall have a thickness of 1/4 inch and shall be fabricated from silicone sponge rubber gasket material. The aluminum guide rods and aluminum lifting ring shall be connected by welding. Welding of aluminum shall conform to the applicable provisions of the AA Specifications for Aluminum Structures.

2.6.4 Angular Face Ring

An angular face ring shall be fabricated or purchased from a supplier conforming to ASTM A 276, Grade TP 304L or 316L stainless steel as shown on the drawings and the flange shall be a minimum of 3/16-inch in thickness. The angular face ring shall be at least the same diameter or slightly larger than the aluminum top plate of the check valve as shown on the drawing.

2.7 RELIEF WELL GUARD POSTS

Steel pipe shall be black steel pipe conforming to the requirements of ASTM A 53, Schedule 40. Concrete shall conform to the requirements of paragraph 2.8 below. After installation, the aboveground portions of the pipe guard posts shall be given one coat of paint conforming to the requirements of SSPC-Paint 25, followed by two coats of yellow paint conforming to the requirements of Fed. Spec. TT-E-489, the specifics color to be selected by the Contracting Officer.

2.8 CONCRETE

Concrete shall conform to the requirements of ASTM C 31, C 33, C 39, C 94, C 150, C 171, C 172, AND C 231. Concrete shall have a minimum compressive strength of 4,000 psi. Concrete shall consist of Portland cement; clean, washed sand; 1-inch maximum size, clean, well-graded, hard-surfaced coarse aggregate; a suitable air-entraining admixture; and sufficient water to produce a slump between one and four inches. Entrained air shall be 6 (six) percent, plus or minus 1-1/2 percent. The concrete shall be mixed in a manner so as to produce a mixture having a consistency that will permit placement as indicated on the drawings. Concrete mixed at the job site shall be used in the work within 45 minutes after mixing. Concrete mixed at a commercial mixing plant and transported to the job site in trucks shall be used in the work within 1-1/2 hours after mixing. Retempering of concrete will not be allowed. Concrete shall not be placed when the ambient temperature is below 40 degrees F or above 85 degrees F unless otherwise approved by the Contracting Officer in writing; nor when the concrete, without special protection, is likely to be subjected to freezing temperatures before final set has occurred. Prior to placing concrete, all surfaces upon which the concrete is to be placed or placed against, shall be wetted. Concrete shall be thoroughly consolidated after placement by suitable vibrators or by rodding. Concrete shall be given a trowel finish and shall be cured by keeping the surface continuously wet for a period of not less than 72 hours or by application of an approved curing compound. Submittals shall conform to the requirements of Section 01330.

2.9 DRILLING FLUID ADDITIVE

The drilling fluid (not a bentonite or other expansive clay system) shall be a suspension of fine-grained soil or shall be a commercial product of a recognized manufacturer. Drilling fluid additives intended for use shall be submitted to the contracting Officer prior to use. The drilling fluid shall have the characteristic of being readily removable from the gravel pack and the walls of the formation by development methods as specified in paragraph 3.8.

PART 3 EXECUTION

3.1 GENERAL – NEW RELIEF WELLS

3.1.1 Shop Drawings and Field Procedures

The Contractor shall submit shop drawings which present details of his methods for drilling, coupling well screen and riser sections together, installing the well screen and riser, backfilling, developing and pump testing the well. The shop drawings shall show the well screen material, size, perforation size, shape and pattern and bottom plug material and installation detail. Also, the riser pipe and well discharge details shall be shown on the shop drawings. Any Contractor proposed substitutes or alternates in material, construction details, or methods must be presented in the shop drawings. No phase of the work shall be initiated until all shop drawings concerning that activity, have been approved.

3.1.2 Location

The location and elevation requirements for the wells are shown on the drawings. The location for each well shall be clearly staked and identified by number and elevation in the field prior to drilling any pilot holes or wells. The pilot hole and well locations shall be approved by the COR and a representative of the Memphis District Geotechnical Branch. Minor field adjustments to the relief well locations may be made by the Contracting Officer. The top of the relief wells shall be installed no higher than the maximum elevation for each well as shown on the drawings except as directed by the Contracting Officer.

3.1.3 Depth-of-Well

The length of well screen and length of riser pipe shall conform to the elevations shown on the drawings and to the final design as presented after the pilot hole boring data has been furnished and evaluated.

3.2 PILOT HOLE BORINGS

3.2.1 Location

Prior to drilling the relief wells, the Contractor shall drill a pilot hole at each well location indicated on the drawings and at any additional locations determined necessary by the Contracting Officer. A wooden survey stake marked with well number and existing ground elevation shall identify each pilot hole location and shall be of sufficient height to be easily seen in the field. Prior to commencement of pilot hole borings, the staked out locations of the pilot holes may be field adjusted by the Contracting Officer. The elevation of the existing ground surface at the pilot hole locations shall be surveyed by the contractor and submitted to the Memphis District Geotechnical Engineering Branch along with the results of the pilot hole sieve analyses data. Upon completion of the pilot hole, the survey stake shall be placed as close as feasible to the location at which the boring was taken. The pilot holes shall be located within 5 feet of the well locations shown on the drawings or as adjusted per paragraph 3.1.2 above.

3.2.2 Method

Pilot holes may be drilled by any method approved by the Contracting Officer which will allow the recovery of samples as described below. Samples shall be obtained with a standard split spoon sampler, (inside diameter of 1-3/8 inch), and shall be driven by any method approved by the Contracting Officer to obtain samples 18 inches in length. Blow counts will not be required unless as specified below. Drilling fluid additives shall be as specified in paragraph 2.9.

3.2.3 Intervals

Pilot holes shall be continuously drilled to an elevation 10 feet above the approximate elevation of the bottom of the riser pipe as shown in the drawings as measured from the ground surface. Sampling shall begin at this elevation unless sand is encountered during the continuous drilling of the hole. If sand is encountered, then sampling shall begin at the clay/sand interface. Samples shall be taken at 2-1/2 foot intervals or change of strata, whichever occurs first for the next 40 feet. After 40 feet of sampling, the sampling interval shall change to every 5 feet for the remainder of the hole. The bottom elevation of the pilot holes shall be (15) feet below the elevation of the bottom of the well screen as indicated on the drawings, as applicable to each well location.

3.2.4 Sampling

Samples shall be taken at 18 inches lengths in the intervals described above. However, samples may be removed less than 18 inches if the total blow counts for the sample reaches 180. If samples are removed before reaching 18 inches in length due to the maximum blow count per sample, then the blow counts shall be documented by the driller.

3.2.5 Testing

Beginning with the first non-cohesive sample, all samples shall be washed in accordance with ASTM C 117 and shall undergo a sieve analysis test in conformance with ASTM C 136. Samples taken shall assist in determining the elevation at which the well screen and riser pipe shall be set and to assist in confirming the possible location of blank areas.

3.2.6 Documentation

A field-boring log shall be maintained for each pilot hole drilled. This data shall be recorded on Form LMM 650 Jan '64 "Field Boring Log", a copy of which is attached at the end of this section. The Contractor shall submit the logs of the pilot borings, the samples and results of sieve analysis tests obtained from the pilot borings with the depths from which samples were obtained, the elevations at which soil strata changes occur, and any other information available from the pilot boring to the Contracting Officer. The Contracting Officer shall then make a determination as to the lengths and locations of well screen, blank pipes between screen sections and riser pipe to be installed in each well. The Contractor shall provide the sieve analyses data through a Microsoft Excel spreadsheet provided by the Memphis District for each boring. The testing

laboratory shall retain a portion of each unwashed sieve sample that exceeds the amount required to perform testing in accordance to ASTM C 117 and C 136 for future test verification. This small sample must be retained until all sieve data has been reviewed by the Memphis District. A copy of each sieve analysis results shall be emailed to representatives of both the Memphis District Geotechnical Engineering Branch and the Caruthersville Area Office. E-mail addresses will be provided during pre-work conferences. After receipt of the required information from the pilot hole described above, the Contracting Officer will make a determination and convey it to the Contractor within 10 working days. Lengths and locations of screen and riser pipe shall be approximately as shown on the drawings but will be subject to change based on the results of the sieve analysis from the pilot hole boring data.

3.3 DRILLING

3.3.1 General

Wells shall be drilled by the reverse rotary method, in such a manner to insure proper placement of the well screen, riser pipe and gravel pack. Methods which involve radical displacement of the formation, or which may reduce the yield of the well, will not be permitted. Only drilling fluid additives approved by the contracting officer may used for drilling. However, the use of a bentonitic type drilling fluid is prohibited. Drilling and installation of well screen and gravel pack shall be completed for each well without interruption. Excavated material shall be disposed of as directed by the Contracting Officer. Before drilling operation begins on each well, the Contractor shall demonstrate that all material, equipment, and experienced personnel are mobilized and that all equipment necessary for the job is adequate for an efficient operation and is operating in a satisfactory manner. Loss of a hole or well because of lack of material, inadequate or faulty equipment, or careless operating procedures will be considered cause for an abandoned well due to fault or negligence of the Contractor.

3.3.2 Reverse Rotary Method

The diameter of the hole shall be sized to permit the placement of the minimum thickness of gravel pack as specified in paragraph 2.3. If the walls of the hole above the top of the gravel pack require support during development operations, a temporary casing similar to that specified in paragraph 3.3.3 shall be placed so as to extend from the ground surface to at least three feet below the top of the gravel pack material. Drilling fluid additives, if used, shall be as specified in paragraph 2.9.

3.3.3 Temporary Casing

A temporary well casing of either iron or steel, new or used, may be used to support the sides of the entire hole during drilling and placement of screen, riser pipe, and gravel pack and to support the sides of the unbackfilled portion of the hole during development of the well. Any temporary casing shall have an inside diameter large enough to provide the minimum gravel pack thickness, as specified in paragraph 3.5, entirely around the well screen or riser pipe and shall have sufficient thickness to retain its shape and maintain a true section throughout its depth, and may

be in sections of any convenient length. The temporary casing shall be securely anchored to the drill rig or ground surface at all times until removed. The temporary casing shall be such as to permit its removal without interfering with the gravel pack or riser pipe. Methods of installation that will create a cavity outside the temporary casing will not be permitted.

3.3.4 Obstructions Encountered

If obstructions are encountered in the foundation which, in the opinion of the Contracting Officer, render it impracticable to complete the well to the directed depth, the Contracting Officer may adjust the depth to conform to that of the obstruction. Alternatively, the Contracting Officer may direct the Contractor to abandon the well, plug the hole by backfilling in accordance with paragraph 3.12 and construct another well at an adjacent site. The Contractor shall provide use drills and equipment that are capable of drilling through insitu wood deposits within the alluvium and capable of removing cobbles up to 5-1/2 inches in diameter. The presence of cobbles up to 5-1/2 inches in diameter or insitu wood that may be encountered during drilling shall not be considered as obstructions or sufficient reason for abandonment of a well. Where obstructions are encountered, drilling shall be continued until it is demonstrated to the Contracting Officer that further efforts to advance the drill hole are impracticable. Such demonstration shall include, but not be limited to, continuing drilling operations when no gain in depth is being made for a minimum of 15 minutes. Wells which are abandoned because of impracticability of completion to the desired depth will be paid for as specified in SECTION 01025, paragraph 1.2.1 (2), except that payment will not be made if abandoned because of faulty operation or neglect of the Contractor.

3.4 INSTALLATION OF RISER PIPE AND SCREEN

3.4.1 Assembly

All riser pipe and screen shall be new and in good condition before installation and all couplings and other accessory parts shall be securely fastened in place. The successive lengths of pipe shall be arranged to provide accurate placement of the screen sections in the soil strata. The use of lengths of screen and riser shorter than 15-ft. long will not be permitted unless previously approved by the Contracting Officer.

The bottom of the screen and riser assembly shall be equipped with an appropriate centering guide which will satisfactorily center the assembly in the hole and hold it securely in position while the gravel pack material is being placed. The centering guide should be placed on the bottom of the screen and have a minimum diameter no less than 1-1/2 inches of the diameter of the drilled hole and ensure minimum clearance needed for placement of the gravel pack. The centering guide or guides should be designed and attached so that natural material removed from the sides of the drilled hole during installation shall be at a minimum. Centering guides, also at a minimum diameter of 1-1/2 inches less than the diameter of the drilled hole, may be placed at other locations along the screen and riser pipe assembly provided they do not interfere with placement of gravel pack material as specified in paragraph 3.5. If a centering guide apparatus or ring is used for placement of the gravel pack that will slip around the well screen and riser pipe, then the guide apparatus shall also have a minimum diameter of 1 and 1/2 inches less than

the diameter of the drilled hole (or on all four sides) ensuring correct alignment along the entire length of the relief well.

3.4.2 Joints

Sections of relief well pipe shall be jointed together as specified in paragraph 2.1.2.2. Joints shall be designed to provide strength capable of supporting the weight of the relief well stem as it is lowered into the hole.

3.4.3 Installation

The contractor shall install, develop and test at least one well to insure compliance with the specifications before installation of the 6th well will be allowed. Results of all tests must be submitted to the Contracting Officer prior to beginning the installation process of the 6th well. The assembled riser pipe and screen shall be placed in the hole in such manner as to avoid jarring impacts and to insure that the assembly is centered and not damaged or disconnected. All mud and undesirable material shall be washed free of from the well screen prior to placing in the hole. After the screen and riser pipe have been placed, a gravel pack shall be constructed around the screen section as specified in paragraph 3.5 and the well developed as specified in paragraph 3.8. The top of the riser pipe shall be held at the designated elevation as shown on the drawings during placement of the gravel pack. Immediately after the installation of the well screen and riser pipe assembly, the depth of the well shall be measured by means of an approved sounding device.

3.4.4 Plumb and Alignment

Each well shall be installed and maintained straight and plumb during placement of gravel pack and development. An alignment test shall be made for each well after the top of the well is securely fastened in horizontal and vertical positions and immediately prior to placing the gravel pack. The Contracting Officer shall be present during the alignment test. Excessive misalignment or deviation from plumb shall be corrected before placing the gravel pack. The alignment test shall consist of two 10-ft. sections of standard 6-in. pipe coupled together with a 7.39-in. OD coupling lowered inside the well for the full depth of the well and withdrawn without binding against the sides of the well screen or riser pipe for 8-inch diameter wells. The alignment test for 10-inch wells shall consist of two 10-ft sections of standard 8-inch diameter pipe coupled together with a 9.5-inch OD coupling. The Contractor shall furnish the above apparatus and shall perform the alignment tests. The Contractor shall notify the Contracting Officer a minimum of 8 working hours prior to performing the alignment tests. After completion of the alignment test, the Contracting Officer may elect to perform a plumb test before placement of the gravel pack. This test, if performed, will be at the expense of the Government using Contractor-furnished equipment and shall consist of a plumb-line run from the top of the well to the bottom of the well. A variation of up to 12-in. per 100-ft, will be permitted in the combined length of screen and riser pipe of the well. In the event the Contracting Officer elects to perform the plumb survey prior to gravel pack placement and the well fails to conform to the standard described above, the Contractor, at no additional expense to the Government, shall correct the

plumb of the well. The Contractor shall provide assistance to the Contracting Officer in performing the plumb test, if requested.

3.5 PLACING GRAVEL PACK

3.5.1 General

After the screen and riser pipes have been placed, and alignment surveys and plumb surveys (if performed) are conducted, the gravel packs shall be placed through two 4-in. I.D. tremies with no obstructions.

3.5.2 Tremie Pipe

The tremie hopper shall be so constructed and balanced that gravel pack material will feed freely and equally to 2 tremie pipes located at 180 degrees on each side of the screen. Tremie pipe shall consist of equal 10-ft lengths of standard 4-in. pipe with 1/16-in. wide equally spaced slotted openings. Connections between the tremie pipe and the hopper shall be designed for quick connection or disconnection for adding or removing tremie pipe with least possible delay. Tremie pipe shall contain no dents, flat spots, damaged threads, or holes, and shall be reamed and/or deburred to full I.D. of the pipe.

3.5.3 Tremie Guide

The tremie guide shall consist of a metal ring or rings of sufficient inside diameter to slip freely over riser pipe and screen with 4-inch collars welded to the guide at 180 degrees to securely hold the tremie pipe in place. If this metal ring/rings or apparatus is also used as a centering device for correct alignment of the relief wells, then the ring/rings or apparatus shall have a minimum outside diameter of 1-1/2 inches less than the diameter of the drilled hole for each well. This apparatus does not have to be continuous in diameter around the relief well pipe but shall have the minimum clearance on all four sides ensuring that the relief well pipe will be centered in the hole and the gravel pack will be evenly distributed around the pipe. At no time shall tremie guide or pipes be raised, lowered or supported by only one pipe.

3.5.4 Gravel Pack Placement (Gravity)

Prior to and during placement of the gravel pack, the top of the temporary casing or hole shall be covered or otherwise shielded to prevent the gravel pack from entering the space around the well except through the tremie pipe. No material shall be allowed to enter the well except through the tremie pipes. The Contractor shall be equipped to efficiently add gravel pack material to the hopper in any position from the ground surface to the maximum height of the hopper. The tremie pipe shall be installed to a length of 10 feet below the lower tremie guide. The gravel pack material shall be placed in an approved manner and without significant segregation. The gravel pack shall have a minimum thickness of 6 in. between the outside of the well screen and the outside of the gravel pack and shall be placed above the top of the well screen to the level shown on the drawings. At the commencement of placing operation, the tremie shall rest on the bottom of the hole and it shall be filled with gravel pack material. The tremie shall then be raised in

increments approximately equal to the increments of the gravel pack placed. At all times during the placing of the gravel pack, the tremie pipe shall be kept filled with gravel to five (5) feet above the top of the well.

3.5.5 Gravel Pack Placement (Pumping)

The filter material may be pumped into the well using two 4-inch tremies with no obstruction as stated above provided the Contractor can pump the gravel pack without significant segregation of the gravel pack material and can pump in a continuous manner. A plan shall be submitted to the Contracting Officer and, if approved, a well shall be installed and tested before production installation proceeds.

3.5.6 Temporary Casing

If temporary casing is used, the gravel pack shall be placed in increments not to exceed 2 feet; the tremie and temporary casing shall be raised in small increments approximately equal to the increments of the gravel pack placed, except that at no time prior to the completion of placement of the gravel pack shall the bottom of the casing be less than 1 foot below the top of the gravel pack in the hole. The Contractor shall provide a means of measuring the gravel pack in the hole and also provide a means of measuring the gravel pack depth. The alternate placing of gravel pack material and withdrawing of the tremie and temporary casing shall be continued until the gravel pack has been placed to the level shown on the drawings.

3.6 INSTALLATION OF ANGULAR FACE RING

The riser pipe shall be cut at the specified elevation for each relief well or 4-inches above the top of the concrete slab. The cut shall be square, smooth and even along the top of the riser pipe. The angular face ring shall be welded to the top of the riser pipe with the top of the ring 1/4–inch above the smooth cut on the riser pipe. The weld shall be a continuous weld along the inside of the angular face ring along the top of the riser pipe. The finished product shall result in a smooth surface with no rough edges and provide continuous support between the silicone sponge rubber gasket of the check valve and top of the angular face ring.

3.7 INSTALLATION OF CHECK VALVE

The top of the riser pipe for each well shall be fitted with an aluminum check valve. The check valve and/or a temporary cover as approved by the Contracting Officer shall be installed on top of the riser pipe immediately after installation of the riser pipe and filter gravel. The temporary cover as approved shall be used during the installation and development process only. The aluminum check valve or temporary cover shall remain in place at all times throughout the well installation and development process to prevent possible contamination or damage to the well. The only time the check valve or temporary cover shall be removed will be during pumping, development and cleaning operations. The aluminum guide rods shall also slide freely up and down inside the riser pipe and shall be dimensioned as shown on the drawings to ensure proper seating of the check valve for the life of the relief well. The installation of the check valve shall be inspected and approved by the Contracting Officer prior to installation of each relief well

outlet.

3.8 DEVELOPMENT

3.8.1 General

Following placement of gravel pack materials, the Contractor shall develop the relief well to remove all fines from the well and gravel pack so as to produce a stable well of maximum efficiency. Well development shall consist of chemical treatment, mechanical development (surging) and pumping. The Contractor will start the well development and testing process no later than 5 days from the installation of well screen riser and gravel pack. The Contractor shall be responsible for maintaining at the relief well the needed access and work area and clearance in the relief well necessary to accomplish development. The Contractor shall furnish, install or construct the necessary discharge line and troughs to conduct and dispose of the discharge a sufficient distance from the work area to prevent damage. Development shall be conducted to achieve a stable well of maximum efficiency and shall be continued until little or no additional material from the foundation can be pulled through the gravel pack. After each development cycle, gravel pack material shall be added to the annular space around the screen to maintain the top elevation of the gravel pack to the specified elevation. The Contractor shall provide a bubbler tube or other approved means for accurately determining the water level in the well under all conditions.

If, at any time during the development process, it becomes apparent in the opinion of the Contracting Officer that the well may be damaged, development operations shall be immediately curtailed. The Contracting Officer may require a change in method if the method selected does not accomplish the desired results. The Contracting Officer may order that wells that continue to produce excessive amounts of fines after development be abandoned, plugged, and backfilled, and may require the Contractor to construct new wells nearby. All materials that may have entered the well during the placement of the gravel pack or pulled into the well by the development process shall be removed prior to each development cycle and pumping test.

Drainage shall be provided prior to any pump testing or development of constructed wells. Any water discharged during the development process must be conveyed by way of collector ditches and outlet ditches. At no time shall the water be directly discharged on adjacent lands outside of the right of way.

3.8.2 Chemicals

To assist in dispersing and removing fines and drilling fluid from the walls of the drilled hole and from the gravel pack, chemicals shall be added to the well between 24 and 36 hours before development of the relief well. Following initial installation of the well screen and riser assembly and placement of the gravel pack and cleanout of the well, calcium hypochlorite (example: HTH) with a minimum of 70 percent available chlorine in the amount of one pound per 100 gallons of water in the well shall be dissolved in water and poured into the well. The chemicals shall be mixed in the well by slowly injecting compressed air at the bottom of the well for a period of 2 hours or by other methods as approved by the Contracting Officer. No dis-

charge from the well shall be allowed during mixing. The chemicals in the well shall be agitated by the method described above for two hours at 8-hour intervals with the last agitation being immediately prior to initiation of development of the relief well.

3.8.3 Surge Blocks

Surge blocks shall consist of two groups of neoprene rubber circular disks spaced 4 feet apart and held in place by washers and spacers. Each group of disks shall consist of a one-inch thick, seven-inch diameter rubber disk, with a one-inch thick, six-inch diameter rubber disk on either side for 8 inch wells. The surge block for a 10-inch well should be composed of a one-inch thick, nine-inch diameter rubber disk, with a one-inch thick 8-inch diameter rubber disk on either side. This combination of rubber disks shall be fixed between rigid washers 2-1/2- to 3-1/2-inches in diameter. The entire assembly shall be rigidly attached to the end of a drill stem or pipe of sufficient mass to cause it to fall free on the downward stroke. The disks shall be replaced whenever they become worn. The Government may require the Contractor to vary the number of disks and increase the rigid washers to a diameter to 4-inches to result in the most effective surging action and yet be flexible enough to prevent damage to the well. The Government may also require the Contractor to make other minor changes in the design of the surge block as the work proceeds in order to accomplish a more thorough surging action without damage to the well. The surge block shall be operated by equipment capable of varying speeds over the full depth of the wells. The equipment shall be capable of traversing and maintaining the velocity of surge block travel along the well screen at a rate between 1-1/2 and 3 feet per second in both down and up directions.

3.8.4 Procedure

3.8.4.1 General

At the time of development of any relief well, the well shall be free of draw down or surcharge effects due to pump testing, developing or drilling at another location. The static water surface in the well shall not be lowered below the top of the screen during development operations unless permission is given by the Contracting Officer. Development of wells shall not commence until drilling additives allowed by paragraph 3.3.2 (if used) have completely broken down and the chemical treatment specified in paragraph 3.8.2 has been completed.

3.8.4.2 Surge Block Process

Immediately following completion of the specified chemical treatment, the Contractor shall measure the depth of the well and record the well depth to the nearest .10-foot. This measurement shall be compared with the actual depth of the well to determine if there is any material that has settled to the bottom during the chemical operations. The Contractor shall perform sufficient cycles of development until little or no sand can be pulled into the well but must complete three cycles per well as a minimum. Each cycle shall consist of one phase of surging and one of air pumping to remove infiltrated material. The well shall be surged at a rate of between 1-1/2 to 3 feet per second along the well screen and in a manner such that the surge block shall not impact the bottom of the well. Surging shall proceed for a minimum of 60

minutes per phase. The Contractor shall make continuous adjustments in the length of travel of the surge block to avoid impacting the surge block on the bottom of the well. Development shall begin above the screen and move progressively downward to prevent the surge block from becoming sand locked. The initial surging motion should be relatively gentle and begin in the riser pipe 10 to 15 feet below the static water level. After waiting 5 minutes following completion of each surging phase, the Contractor shall measure and record to the nearest .10-foot, the depth to the top of any material that has been brought into the well and settled at the bottom. Upon completion of each surging phase the well shall be air pumped at a rate not to exceed 500 g.p.m. for a minimum of thirty minutes to remove sediment material. Other methods for removing sediment may be approved by the Contracting Officer.

3.8.4.3 Intermittent Pumping

At the conclusion of the development process, the well shall be subjected to a period of intermittent pumping. This shall be performed by pumping the well at a capacity sufficient to produce a rapid draw down in the well of approximately 5- to 10-feet. The pump shall then be stopped. There shall be no backflow through the pump. The Contractor shall then permit the water surface to rise to its former elevation and then repeat the procedure. Cycle time for this procedure shall vary as directed but shall not be more than 3 cycles per minute. A turbine or centrifugal type pump shall be used with any attachment(s) necessary to accomplish rapid starting and stopping for intermittent pumping. The pump intake shall be set between 2 and 6 feet from the bottom of the well. The amount of draw down or rate of pumping during the intermittent pumping may be adjusted by the Contracting Officer if in the opinion of the Contracting Officer, the efficiency of the well might be positively affected. Intermittent pumping shall be continued for one hour after which time all material remaining in the well shall be removed. Before removal of sediment in the well, the contractor shall record the amount of sediment in the bottom of each well after each cycle of development and provide the information to the Contracting Officer.

3.8.5 Data

As a minimum the following items related to well development shall be measured and recorded by the Contractor on the form included at the end of this section and entitled “Well Development Data”. Development cycles where measurements and records are required include both the Surging and Intermittent Pumping operations.

Development Cycle Type.

Date and time of start and finish of the development cycle.

Depth of gravel pack before and after each development cycle.

Depth to bottom of well before and after each development cycle.

The amount of gravel pack added after each development cycle.

3.9 BACKFILLING

During the development of the well, the top of the gravel pack material shall be maintained at the level shown on the drawings. After the well has been developed and pump tested as stated below, the annular space above the gravel pack shall be backfilled by first placing a minimum 12-inch layer of sand, as specified in Part 2 PRODUCTS, on top of the gravel pack and then filling the remainder of the space up to the concrete slab with a grout mix as specified in Part 2 PRODUCTS. This grout mix shall be injected at the bottom of the annular space to be grouted under a maximum pressure of 10 psi. A concrete slab with concrete conforming to the requirements as specified in paragraph 2.8 shall be placed above the grout, as shown on the drawings. The temporary casing, if used, shall be withdrawn in increments as the grout is placed. The Contractor shall fill with impervious material to original grade all pits such as that incidental to the reverse rotary method of drilling. Construction of the relief well outlets or backfilling shall not commence until the development of the well is completed and the gravel pack has been placed to the elevation shown on the drawings.

3.10 PUMPING TESTS

3.10.1 General

Upon completion of installation and development, and before final acceptance, each well shall be subjected to a pumping test. The test pumping and sand infiltration tests hereinafter specified may be performed before placement of the grout mix prescribed in paragraph 3.9, except that the concrete slab shall not be placed prior to completion of the pumping and sand infiltration tests. In no event shall the pumping tests be performed when the ground water table at the well is less than 10 feet above the top of the well screen. Prior to commencement of the pumping test, the Contractor shall provide approved means for accurately determining the water level in the well under all conditions. The Contractor shall furnish and install a flow meter of standard design for the purpose of measuring the discharge from the well during the pumping test. The Contractor shall furnish, install, or construct the necessary pipe discharge line, troughs, or ditches necessary to dispose of the pumping test discharge a sufficient distance from the work area to prevent damage. After completion of the test, the depth of the well shall be measured, by means of an approved method, under the direction of a representative of the Contracting Officer and the amount of sediment in the bottom of the well from the pump test shall be recorded.

3.10.2 Equipment

3.10.2.1 Pump

The Contractor shall provide a pump capable of producing the specified draw down over a period of time sufficient to satisfactorily perform the pumping test specified. The use of deep well pumps will be permitted provided that the pump itself is kept within the riser pipe, and the Contractor demonstrates the ability to comply with all specified requirements of pumping and sand measurement. The pump shall be complete with gasoline, diesel, or electric motor. In cases where an electric motor is used, the Contractor shall provide, without additional cost to the

Government, the electrical power and the necessary wiring which shall be removed by the contractor at the completion of the pumping test.

3.10.2.2 Water Level

The Contractor shall provide means for accurately determining the water level in the well under all conditions. This means of measurement shall be capable of determining the water level in the wells before, during, and after pumping tests. The use of a weighted tape shall not be regarded as sufficiently accurate for such measurement.

3.10.2.3 Flow Meter

The Contractor shall furnish and install a calibrated flow meter of standard design for the purpose of measuring the discharge from the well during the pumping test. The calibration of the flow meter shall be checked at periodic intervals.

3.10.2.4 Sand Infiltration Measurement

A sand infiltration test shall be conducted for the purpose of determining whether sand and/or material is being removed from around the well when the well is discharging flow. The Contractor shall measure the amount of sand infiltration from each relief well during pump testing using a Rossum centrifugal sand sampler or an approved equal. The pump discharge line shall be equipped with the necessary fittings to properly conduct the test. The contractor's employee shall be experienced in conducting the sand infiltration test including placing the sampler at the proper location along the discharge line, calibrating the proper flow into the meter, and experienced in reading the amount of sand in the sampler. The sand infiltration test shall be conducted and monitored for a minimum of 30 minutes per pump test and shall begin within the first hour of the pumping test. If the amount of sand collected is less than the first readable unit of measure on the sampler, then a trace or an amount less than the minimum readable on the scale shall be recorded (do not try to estimate the amount of sand if it is not a readable amount). The attached sand infiltration test data sheet shall be filled out completely for each test conducted and furnished to the Contracting Officer. If the test fails and additional well development is required, then this information shall also be placed on the data sheet.

3.10.3 Data

As a minimum the following test data items shall be obtained and recorded by the Contractor on WES Form 796, a copy of which is attached at the end of this section. The Contracting Officer shall check the last two items.

Time of observation.

Depth of water in well before, during, and after pumping.

Flow in gpm.

Elevation of water in well before and after pumping.

Elevation of water in adjacent wells or piezometers before and during pumping, when requested by the Contracting Officer.

The depth of sand in well before, during, and after pumping.

Amount of sand pumped out of well as recorded from the sand infiltration test.

3.10.4 Procedure

The pumping and sand infiltration tests shall be conducted under the direction of the Contracting Officer. The Contractor shall test each well by pumping continuously for a minimum of two hours. Ground water level readings in the well and gallons pumped (on flow meter) shall be recorded at the end of each of the following intervals (in minutes): 1, 2, 3, 4, 5, 10, 15, 20, 25, 30, 45, 60, 75, 90, 105, 120, or as directed by Contracting Officer. The pumping shall be at a constant rate sufficient to produce either a draw down of 10 feet or a production of 500 gpm. No test pumping of a well will be permitted concurrently with drilling, surging, or pumping of any other well within 200 feet therefrom. In the event that the test is interrupted, other than by order of the Contracting Officer, prior to the completion of the specified period of continuous operations, the test shall be re-run at no additional expense to the Government. In addition to the test described above, the Contracting Officer may direct the Contractor to perform additional testing. Such additional testing shall conform in general to the requirements specified above with the exception that the Contracting Officer will determine the duration of the tests and the approximate draw down. The test, to be successful, shall be continuous throughout the specified period. In the event that sand or other material infiltrates into the well as a result of the pumping test, the following procedure will be followed: If the rate of sand infiltration during the latter part (last hour) of the two hour pumping test has not been reduced to one pint or less per 25,000 gallons pumped (5 parts per million, ppm), the well shall be resurged by manipulation of the test pump for 20 minutes after which the test pumping shall be resumed and shall be continued at the constant rate specified above until the sand infiltration rate is reduced to less than one pint per 25,000 gallons, but not for more than a total of eight hours. If at the end of eight hours of pumping the rate of infiltration of sand is more than one pint per 25,000 gallons pumped, the well shall be abandoned. However, the Contractor may continue the test pumping and perform such other approved remedial work, as he considers desirable, at his own expense. After such additional test pumping and other remedial measures, the sand infiltration rate of a well is reduced to not more than one pint per 25,000 gallons pumped, the well will be accepted. Upon completion of the pumping test, any sand or filter material in the bottom of the well shall be recorded and removed by pumping or by other approved methods, after which the Contractor shall remove all equipment, discharge lines, etc., and shall backfill any excavated areas. Abandoned wells shall be plugged in accordance with paragraph 3.12 below and a new well installed nearby.

3.10.5 Records

The Contractor shall obtain and furnish to the representative of the Contracting Officer for record

purposes the elevation of the water in each well before and after the development pumping, the flow in gpm at the completion of the pumping and the time of observation. The water surface elevation shall be obtained immediately before starting the surge pump and the water surface elevations and flow shall be obtained just before stopping the pump upon completion of the development pumping. This data shall be recorded on WES Form 797, a copy of which is attached at the end of this section.

3.11 INSTALLATION OF GUARD POSTS

Upon completion of the relief well outlet structures for the new wells, the Contractor shall furnish and install three concrete filled steel pipe guard posts, anchored in concrete, around each well as indicated on the drawings. Paint shall be as specified in Products section of specification.

3.12 PLUGGING ABANDONED HOLES

For wells ordered abandoned, the screen and riser pipe shall be salvaged from the hole, if practicable. For wells ordered abandoned where the Contracting Officer determines that it is impossible or impractical to salvage the screen and riser pipe, the well shall be grouted with the screen and riser assembly in place. The riser pipe shall be removed for a minimum depth of two feet below natural ground. Once grout has been placed, the top 2 feet below natural ground shall be backfilled with cohesive soils. The grout shall be injected through a pipe with a tip within three feet of the bottom of the well and forced upwards towards the surface. When the grout reaches the surface, it shall be allowed to flow to waste until the Contracting Officer determines that the grouting has been satisfactorily accomplished. The grout shall be injected at a maximum pressure of 1/2 psi per foot of depth of the hole. The grout mix shall consist by weight of one part Portland Cement, 4 parts sand, 2 parts Bentonite and shall be mixed with sufficient water to provide a 6" to 8" slump.

3.13 EMERGENCY WELL CLOSURE DURING CONSTRUCTON

Well construction will not be permitted during periods of high groundwater, during periods prior to high predicted River stages and/or during other emergencies unless directed or approved by the Contracting Officer. All remediation measures will be directed by the Contracting Officer. Resulting delays will be compensated in accordance to the Default Clause. The Contractor or his representative shall be available at all times during any declared emergency. During periods of high groundwater or high river stages, the contracting officer may direct the Contractor to restrict all flow from the wells or may allow the completed/partially completed wells to flow without additional adjustments. If directed by the Contracting Officer, wells shall be plugged with a mechanical test plug to prevent flow from the wells. The mechanical test plug shall be a pipe stem test plug with a bypass, and shall be capable of withstanding maximum water pressures equivalent to 20 feet of head. The mechanical plugs will be provided by the Contractor at no additional cost to the government. The Contracting Officer may also direct the Contractor to temporarily fill the space between the riser pipe and the drill hole for any partially completed well.

-- End of Section--

FIELD BORING LOG

HOLE NO. _____
SHEET _____ OF _____

PROJECT_____ LOCATION _____
DRILL RIG _____ INSPECTOR_____ OPERATOR _____
DEPTH OF WATER_____ DATE _____ TABLE _____ DATE _____
ELEVATION OF GROUND _____ MUD _____

Sample Number	Date	Sample		Stratum		Classification - Remarks	Type Sampler
		From	To	From	To		
LMM 650 JAN '64							

RELIEF WELL INSTALLATION REPORT

PROJECT:	LEVEE DISTRICT:	
LOCATION (STA):	OFFSET FROM CENTER LINE:	WELL NO.:
DRILLING METHOD:	DATE AND TIME: - FROM:	TO:
WELL SCREEN: - TYPE:	INSIDE DIAM:	PERFORATIONS:
RISER: - TYPE	INSIDE DIAM:	FILTER:
TYPE OF WELL GUARD	INSIDE DIAM:	TYPE OF BACKFILL:
CONTRACTOR:	CONTRACT NO.:	FORMAN: OPERATOR:
GROUND ELEV AT WELL:	DEPTH TO: Fine Sand:	Medium to Fine Sand:
ELEV TOP OF RISER:	ELEV TOP OF WELL GUARD:	ELEV TOP OF CONCRETE BACKFILL:
TYPE OF CHECK VALVE:	WELL EXTENSON: - TYPE:	HI:

FINAL WELL INSTALLATION DATA	
RISER PIPE LENGTH:	INSIDE DEPTH OF WELL:
"EXTRA: SCREEN LENGTH:	DEPTH OF SAND IN WELL AFTER CLEANING:
"DESIGN" SCREEN LENGTH:	ELEV TOP OF WELL SCREEN:
TOTAL SCREEN LENGTH:	ELEV TOP OF OF FILTER:
"BLANK" PIPE LENGTH:	INSIDE BOTTOM ELEV OF WELL:
DEPTH OF HOLE:	ELEV RISER SET AT:

SURGING DATA					
METHOD:	DATE AND TIME:	TOTAL SURGING TIME:			
GRAVEL IN WELL BEFORE SURGING:	MATERIAL SURGED IN:	SURGING CYCLE	#1:	#2:	#3:
SURGING CYCLE #4:	#5:	#6:	#7:	#8	TOTAL:
SETTLEMENT OF FILTER DURING SURGING:					

PUMPING DATA	
RATE OF PUMPING:	TOTAL PUMPING TIME:
RATE OF SAND INFILTRATION: - START:	End:
REMARKS:	

LOG OF HOLE	DEPTH	PIPE INSTALLED
	-0-	
	-10-	
	-20-	
	-30-	
	-40-	
	-50-	
	-60-	
	-70-	
	-80-	
	-90-	
	-100-	

WES FORM 797
MAR '53
REVISED OCT. '53

INSPECTOR

Well Development Data

Project:_____
Well #:_____

Development Surge / Int. Pump	Cycle Number	Date	Start Time	Finish Time	Depth to Filter	Depth to Well Bottom	Filter Added	Comments

RELIEF WELL PUMPING TEST REPORT

PROJECT:	LEVEE DISTRICT:

LOCATION (STA):	ELEV TOP OF RISER:	WELL NO:

DATE:	TIME TEST STARTED:	TIME TEST COMPLETED:

TIME	ELAPSED TIME MINUTES	DEPTH TO WATER	DRAWDOWN IN FEET	FLOW IN GPM	TIME	ELAPSED TIME MINUTES	DEPTH TO WATER	DRAWDOWN IN FEET	FLOW IN GPM

SAND INFILTRATION TEST

DEPTH OF WELL:	DEPTH TO SAND IN WELL BEFORE TEST:	SAND IN WELL BEFORE TEST:

TEST NO.	TIME	DEPTH TO SAND (FT)	SAND IN WELL (PTS)	GAIN OR LOST OF SAND IN WELL (PTS)	SAND PUMPED OUT OF WELL (PTS)	TOTAL INFLOW OFSAND INTO WELL (PTS)	LENGTH OF TEST (MIN)	RATE OF SAND INFILTRATION (PTS. HR)

DEPTH TO SAND IN WELL AFTER TEST:	SAND IN WELL AFTER TEST:	SAND IN WELL AFTER CLEANING:

REMARKS:

WES FORM 796
MAR '53
REVISED OCT '53

INSPECTOR

Sand Infiltration Test

PROJECT: _____
JOB LOCATION: _____
JOB #: _____
CLIENT: _____

PUMP TEST START TIME: _____

WELL #: _____
WELL DEPTH (ft): _____
OPERATOR: _____
INSPECTOR: _____
DATE: _____

TEST #	TIME (min) (start/stop)	FLOWMETER READING (FLOW) (start/stop)	PUMPING RATE (gpm)	LENGTH OF TEST (min)	OUTLET VALVE FLOW (GPM)*	ROSSUM READING ml	SANDING RATE ml / min	CONVERSION FACTOR RATE * 528	SANDING RATE (ppm)
1									

* Outlet valve should be calibrated to 0.5 GPM
Maximum Allowable sanding rate is 1pt / 25000 gal ~ 5ppm (parts per million)

If sanding rate exceeds specifications, describe measures taken between tests:

_____

_____

_____

_____

_____

_____

_____

_____

DIVISION 2 - SITE WORK

SECTION 02710

PIEZOMETERS

TABLE OF CONTENTS

PART 1 GENERAL
- 1.1 SCOPE
- 1.2 QUALITY CONTROL
- 1.3 APPLICABLE PUBLICATIONS
- 1.4 MATERIALS
  - 1.4.1 Piezometer Tips
  - 1.4.2 PVC Riser Pipe
  - 1.4.3 PVC Adapter Couplings
  - 1.4.4 Sand Backfill for Piezometer Tips
  - 1.4.5 Bentonite Pellets
  - 1.4.6 Impervious Backfill
  - 1.4.7 Concrete Collar
  - 1.4.8 Sealing Compound
  - 1.4.9 Solvent Compound
  - 1.4.10 Steel Pipe

PART 2 PRODUCTS (Not Applicable)

PART 3 EXECUTION
- 3.1 INSTALLATION
- 3.2 PIEZOMETER GUARD POSTS

SECTION 02710

PIEZOMETERS

PART 1 GENERAL

1.1 SCOPE

The work covered by this section consists of furnishing all plant, labor, materials and equipment, and performing all operations necessary for the installation of piezometers as indicated on the contract drawings and/or specified herein.

1.2 QUALITY CONTROL

The Contractor shall establish and maintain quality control for the work performed under this section of the specifications to assure compliance with contract requirements and shall maintain records of his quality control for all construction operations including but not limited to the following:

(1) Materials conform to the specifications and drawings.

(2) Installation of piezometers including locating, drilling, setting tips and backfilling.

(3) Testing piezometers after completion of installation.

(4) Determine the elevation of the top of the piezometer to the nearest 0.1-foot, NGVD.

The records and tests, as well as the records of any corrective action taken, shall be submitted to the Contracting Officer as part of the daily quality control report specified in Section 01451. Also, a complete installation report showing elevation of the top of sand, bentonite pellet seal, and impervious backfill.

1.3 APPLICABLE PUBLICATIONS

The following publications of the issues listed below, but referred to thereafter by basic designation only, form a part of this specification to the extent indicated by the reference thereto:

American Society for Testing and Materials (ASTM) Publications.

A 53-90b	Pipe, Steel, Black and Hot-Dipped, Zinc-Coated, Welded and Seamless
C 33-93	Concrete Aggregates
D 1785-91	Poly (Vinyl Chloride)(PVC) Plastic Pipe, Schedules 40, 80, and 120
D 2467-92	Socket-Type Poly (Vinyl Chloride) (PVC) Plastic Pipe Fittings, Schedule 80
D 2564-91a	Solvent Cements for Poly (Vinyl Chloride) (PVC) Plastic Piping Systems

Federal Specifications (Fed. Spec.).

SS-S-200E	Sealants, Joint, Two-Component, Jet-Blast-Resistant, Cold-Applied, for Portland Cement Concrete Pavement

1.4 MATERIALS

Materials shall conform to the respective publications and other requirements specified below.

1.4.1 Piezometer Tips

The tips of the piezometers shall be 2 inch O.D. PVC pipes with No. 15 slots.

1.4.2 PVC Riser Pipe

Pipe shall be 3/4-inch PVC conforming to the requirements of ASTM D 1785, Schedule 80.

1.4.3 PVC Adapter Couplings

Plastic adapter couplings shall be Schedule 80, 3/4-inch PVC fittings conforming to ASTM D 2467.

1.4.4 Sand Backfill For Piezometer Tips

Sand backfill for piezometer tips shall be concrete fine sand as specified in ASTM C 33

1.4.5 Bentonite Pellets

Pellets shall be commercially available sodium bentonite pellets.

1.4.6 Impervious Backfill

Material shall be classified under the Unified Soil Classification System as CL or CH type material. The Unified Soil Classification System is identified on Drawing 15.

1.4.7 Concrete Collar

Concrete for the concrete collar shall conform to requirements as specified in SECTION 02708, paragraph 2.8 CONCRETE.

1.4.8 Sealing Compound

Sealing compound placed around the 4-inch galvanized steel pipe placed through the concrete shall conform to SS-S-200.

1.4.9 Solvent Compound

Solvent compound for assembling PVC pipe and couplings shall conform to ASTM D 2564.

1.4.10 Steel Pipe

The 4-inch steel pipe shall be galvanized steel pipe conforming to the requirements of ASTM A 53, Schedule 40, fitted with a vented cap as indicated on the drawings.

PART 2 PRODUCTS (Not Applicable)

PART 3 EXECUTION

3.1 INSTALLATION

Piezometers shall be furnished and installed in accordance with details and at locations and elevations indicated on the drawings. Piezometers shall be placed in 6-inch diameter holes drilled by rotary drilling method or other approved method which will insure proper placement of tip, riser pipe, sand around tip, and grout around riser pipe, where required. The Contractor shall use a centering device or spider to center the piezometer tips in the hole. The use of a bentonitic type drilling fluid or other expansive clay systems are prohibited and shall not be used. Drilling fluids intended for use shall be submitted to contracting officer prior to use. The drilling fluid shall have the characteristic of being readily removable from the filter sands

and the walls of the formation. Excavated material shall be disposed of as directed by the Contracting Officer. A temporary well casing of either iron or steel, new or used may be used to support the sides of the hole during drilling and placement of tip, riser pipe and sand backfill. The temporary casing shall have an inside diameter of at least 6 inches and shall have sufficient thickness to retain its shape and maintain a true section throughout its depth and may be in sections of any convenient length. The temporary casing shall be such as to permit its removal without interfering with the fill or riser pipe. Subject to approval, the Contractor may set the temporary casing by any method which will not create a cavity around the outside of the temporary casing at any point along its entire length. If the temporary casing should become unduly distorted its removal and the installation of new casing will be required at no additional cost to the Government. Except where the rotary method is used, temporary casing shall be carried to a minimum depth of 1-foot below the bottom elevation of the piezometer tips. After the piezometer tip and riser pipes have been placed, the sand shall be placed in an approved manner. The use of tremie will not be required. The temporary casing, if used, shall be raised in increments not to exceed 2 feet, allowing the sand to flow out the bottom of the casing as more sand is placed in the top. Alternate placing of sand and withdrawing of temporary casing shall be continued until the sand has been placed to the required elevation. Piezometer tips shall be placed at the locations and elevations shown on the drawings. Piezometers will require a seal above the concrete fine sand as specified in ASTM C 33. The seal will be placed as shown on the drawings. The seal shall be composed of bentonite pellets and shall be placed in layers not more than 1 foot in thickness and thoroughly tamped in place. Above the bentonite seal, impervious backfill shall be placed as shown on the drawings. The backfill shall be placed in layers not more than 1 foot in thickness and thoroughly tamped in place. After installation of the piezometer and after the drilling additive, if used, has broken down, the Contractor shall perform a falling-head permeability test on the piezometer. The Contractor shall notify the Contracting Officer at least twenty-four hours prior to the time that each test is to be conducted. All falling-head permeability tests shall be made using clear, clean water. The data shall be recorded on Government-furnished WES Form 798 and submitted to the Contracting Officer in accordance with Special Contract Requirement 1.32. A copy of WES Form 798 and an example of WES Form 798 are attached at the end of Section 02708. The falling head test shall be as follows: An initial reading of the water level in the piezometer shall be recorded, even if the piezometer is dry, the piezometer shall be filled to the top of the pipe with water. The water level in the piezometer shall be recorded at one-minute intervals for the first five minutes and at five-minute intervals for an additional 15-minute period. Any piezometer that does not fall 50 percent of the distance to its original level within 5 minutes will not be accepted. If the test indicates that a piezometer is not functioning properly, the Contractor shall remove the piezometer, grout the hole, and install the piezometer at another location all without additional cost to the Government. After tests indicate the piezometer to be functioning properly, a concrete collar shall be placed around the piezometer as shown on the drawings. The concrete shall conform to the requirements as specified in SECTION 02708, paragraph 2.8 CONCRETE. Where the pipes pass through the concrete, sealing compound shall be placed around the pipes sufficiently to effect a watertight seal.

3.2 PIEZOMETER GUARD POSTS

Upon completion and testing of the Piezometers, and before final acceptance, the Contractor shall furnish and install three concrete-filled steel pipe guard posts at each piezometer, as indicated on the drawings. The pipe, concrete, and painting of the pipe shall conform to the requirements as specified in SECTION 02708, paragraph 3.11 RELIEF WELL GUARD POSTS.

End of Section --

PIEZOMETER INSTALLATION REPORT

PROJECT:	LEVEE DISTRICT:	
LOCATION (STA):	OFFSET FROM CENTER LINE:	PIEZ NO.:
PIEZ TYPE:	DEPTH OF PIEZ:	RISER PIPE DIAM:
PIEZ TIP SET IN (SOIL TYPE):	SOIL SAMPLE NO.:	BORING DIAM:
METHOD OF INSTALLATION:		
TYPE OF PROTECTION FOR PIEZ:	VENT:	
GROUND ELEV:	ELEV TOP OF RISER:	ELEV PIEZ TIP:
FILTER:	FROM ELEV:	TO ELEV:
SEAL:	FROM ELEV:	TO ELEV:
INSTALLED BY:	CONTRACT NO.:	FOREMAN:
DATE OF INSTALLATION:	DATE OF OBSERVATIONS:	
METHOD OF TESTING PIEZ:		

TIME	ELAPSED TIME MINUTES	DEPTH TO WATER FEET	TIME	ELAPSED TIME MINUTES	DEPTH TO WATER FEET	TIME	ELAPSED TIME MINUTES	DEPTH TO WATER FEET

REMARKS:

WES FORM 798
MAR '53
REVISED OCT. '53

INSPECTOR

PIEZOMETER INSTALLATION REPORT

"EXAMPLE"

PROJECT: **Nash Relief Wells**		LEVEE DISTRICT: **Little River Drainage District**	
LOCATION (STA): **13/13+25**	OFFSET FROM CENTER LINE: **160 feet**		PIEZ NO.: **30**
PIEZ TYPE: Open Piezometer **2" o.d. pvc (2' length) #25 slob**		DEPTH OF PIEZ: **40 ft.**	RISER PIPE DIAM: **3/4" dia pvc**
PIEZ TIP SET IN (SOIL TYPE): **sand**		SOIL SAMPLE NO.: **n/a**	BORING DIAM: **6"**
METHOD OF INSTALLATION: **Drill Rig - reverse rotary method**			
TYPE OF PROTECTION FOR PIEZ: **4" dia sch. 40 galvanized pipe and three well guard posts**		VENT: **1\4" dia hole in 4" cap**	
GROUND ELEV: **334**	ELEV TOP OF RISER: **337**		ELEV PIEZ TIP: **294**
FILTER: **Ottawa Sand**	FROM ELEV: **292**		TO ELEV: **297.5**
SEAL: **Bentonite Pellet**	FROM ELEV: **297.5**		TO ELEV: **299.5**
INSTALLED BY: **Memphis District**		CONTRACT NO.: **DACW66**	FOREMAN: **Louis Dyche**
DATE OF INSTALLATION: **17 July 1996**		DATE OF OBSERVATIONS: **20 July 1996**	
METHOD OF TESTING PIEZ: **falling head test**			

TIME	ELAPSED TIME MINUTES	DEPTH TO WATER FEET	TIME	ELAPSED TIME MINUTES	DEPTH TO WATER FEET	TIME	ELAPSED TIME MINUTES	DEPTH TO WATER FEET
0730	0	12.2	0735	5	6.6			
	1	0.5'	0736	6	7.2			
0732	2	3.5'	0741	11	9.2			
0733	3	5.5'	0746	16	10.8			
0734	4	6.1'	0751	21	11.7			

REMARKS: **Static water level 12.2 feet below top riser pipe**

Passed falling head test 7.2' > 6.1' @ 5 minute mark

Note: It may not be possible to fill piezometer to the top of the riser pipe.

WES FORM 798
MAR '53
REVISED OCT. '53

Chip Newman
INSPECTOR

DIVISION 2 - SITE WORK

SECTION 02936

ESTABLISHMENT OF TURF

TABLE OF CONTENTS

PART 1 GENERAL
- 1.1 SCOPE
- 1.2 QUALITY CONTROL
- 1.3 AREAS TO BE TURFED

PART 2 PRODUCTS
- 2.1 MATERIALS
  - 2.1.1 Fertilizer (and Limestone)
  - 2.1.2 Mulch
    - 2.1.2.1 General
    - 2.1.2.2 Wood Cellulose Fiber Mulch
  - 2.1.3 Water
  - 2.1.4 Spot Sod
  - 2.1.5 Sprigs
  - 2.1.6 Soil for Repairs
- 2.2 SAMPLING AND TESTING
  - 2.2.1 General
  - 2.2.2 Soil Testing
  - 2.2.3 Material Testing
    - 2.2.3.1 Fertilizer and Limestone (If used)

PART 3 EXECUTION
- 3.1 COMMENCEMENT, PROSECUTION, AND COMPLETION
  - 3.1.1 General
  - 3.1.2 Sequence of Work
- 3.2 PREPARATION OF GROUND SURFACE
  - 3.2.1 General
  - 3.2.2 Clearing
  - 3.2.3 Dressing

3.3 SPECIAL EQUIPMENT
3.4 APPLICATION OF FERTILIZER AND/OR LIMESTONE (IF USED)
3.5 SPOT SODDING
3.6 SPRIGGING
3.7 APPLYING AND ANCHORING MULCH
3.8 HYDRAULIC SLURRY METHOD
3.9 ESTABLISHMENT
3.9.1 General
3.9.2 Maintenance
3.10 INSPECTION AND ACCEPTANCE
3.10.1 General
3.10.2 Areas Requiring Returfing

DIVISION 2 – SITE WORK

SECTION 02936

ESTABLISHMENT OF TURF

PART 1 GENERAL

1.1 SCOPE

The work covered by this section consists of furnishing all plant, labor, equipment, and materials, and performing all operations necessary for establishment and mowing of turf on areas either as specified herein or as shown on the drawings.

1.2 QUALITY CONTROL

The Contractor shall establish and maintain quality control for turfing operations to assure compliance with the contract requirements and shall maintain records of his quality control for all construction operations, including, but not limited to, the following:

(1) Soil Testing

The tests are specified in paragraph 2.2.2 below.

(2) Preparation of Ground Surface

Location and quality of finish dressing, including necessary clearing, filling, or dressing out of washes, smoothness and uniformity of surfaces, and time of year.

(3) Fertilizing (and Liming)

Quality of materials, area fertilized (and limed), quantity applied, and method of application.

(4) Type of Turf

Quality, source, placing, covering, and compaction effort.

(5) Mulching (If Used)

Type of materials, area mulched, quantity applied, method of application.

(6) Maintenance and Repair

Location and type of maintenance problems and remedial treatment performed.

(7) Watering (If Used)

Quality of water, area watered, quantity applied, and method of application.

A copy of these records and tests, as well as the records of corrective action taken, shall be furnished the Government.

1.3 AREAS TO BE TURFED

Turf shall be established on all surfaces of the embankment placed under this contract, areas disturbed by haul roads, except on areas to receive other types of surfacing, and all other disturbed areas.

PART 2 PRODUCTS

2.1 MATERIALS

2.1.1 Fertilizer (and Limestone)

If the Contractor elects to use fertilizer, the fertilizer shall meet the requirements of the State of Missouri for commercial fertilizer. Fertilizer shall consist of a mixture containing nitrogen, phosphorous, and potash, and shall be uniform in composition and free-flowing. The fertilizer may be delivered to the site in bags or other convenient containers or delivered in bulk. If delivered in bags or containers, the fertilizer shall be fully labeled in accordance with the applicable fertilizer laws of the State of Missouri, and shall bear the name, tradename or trademark, and warranty of the producer. Should the commercial fertilizer be furnished in bulk, the Contractor shall furnish certified weight tickets and a certified quantitative analysis report, in triplicate, from a recognized testing laboratory certifying the nutrient ratio of the materials. In the event the commercial mixture is delivered to the job site in the original containers, unopened, the analysis report will not be required. Quantity of fertilizer (and lime), if used, required per acre shall be determined by certified soil tests as specified in paragraph 2.2.2 below. Limestone shall be approved agricultural grade limestone containing not less than 85 percent total carbonates. Limestone shall be ground to such fineness that 25 percent will pass a 100-mesh sieve and 100 percent will pass an 8-mesh sieve.

2.1.2 Mulch

2.1.2.1 General

If the Contractor elects to use mulch to protect the turfed areas, the material used for mulching shall be materials that do not contain noxious grass or weed seed that might be detrimental to the turfing being established or to adjacent farmland.

2.1.2.2 Wood Cellulose Fiber Mulch

Wood cellulose fiber mulch for use with hydraulic application equipment shall consist of wood cellulose fiber, processed to contain no growth or germination inhibiting factors, and dyed an appropriate color to facilitate visual metering of application of the materials. The wood cellulose fiber shall contain not in excess of 10 percent moisture, air dry weight basis. The wood cellulose fiber shall be manufactured so that after addition and agitation in slurry tanks, with water, and any other additives, the fibers in the material will become uniformly suspended to form a homogeneous slurry; and that when hydraulically sprayed on the ground, the material will form a blotter-like ground cover which, after application, will allow the absorption of moisture and allow rainfall or mechanical watering to percolate to the underlying soil. The Contractor shall be prepared to submit, on request, certification from the supplier that laboratory and field testing of the product has been accomplished, and that the product meets the foregoing requirements.

2.1.3 Water

If the Contractor elects to use water as an aid to establish turf, the water used shall be free of injurious quantities of oil, acid, alkali, salt, and other substances harmful to growth of grass.

2.1.4 Spot Sod

If the Contractor elects to spot sod, the sod used to turf the areas specified shall contain a minimum of 85 percent Bermuda grass. Each piece of sod shall have an area of not less than 16 square inches and shall have not less than 2 inches of earth adhering to the roots. Sod that contains noxious grasses and weeds that might be detrimental to the turfing being established will not be acceptable.

2.1.5 Sprigs

If the Contractor elects to sprig, the sprigs used to turf the areas specified shall consist of Bermuda grass. Sprigs that contain noxious grasses and weeds that might be detrimental to the turfing being established will not be acceptable.

2.1.6 Soil for Repairs

For fill of areas to be repaired, soil shall be of a quality at least equal to that which exists in areas adjacent to the area to be repaired. Soil used shall be free from roots, stones, and other materials that hinder grading, planting, and maintenance operations and shall be free from objectionable weed seeds and toxic substances.

2.2 SAMPLING AND TESTING

2.2.1 General

Sampling and testing shall be the responsibility of the Contractor and shall be performed at no additional cost to the Government. Sampling and testing shall be performed by a recognized testing agency.

2.2.2 Soil Testing

Prior to beginning turfing operations, soil from the areas to be turfed shall be tested to determine soil nutrient and limestone requirements. At least one sample per acre shall be tested. Certified test results, and application rates for nitrogen, phosphorous, potash, and limestone (if required), indicated by the soil tests shall be furnished to the Contracting Officer prior to fertilizing.

2.2.3 Material Testing

2.2.3.1 Fertilizer and Limestone (If used)

Duplicate signed copies of invoices from suppliers shall be submitted to the Contracting Officer. Invoices for fertilizer shall show quantities and the percentages of nitrogen, phosphorous, and potash. If limestone is used, the limestone invoice shall show the quantity and the percentages of limestone that pass the 100- and 8-mesh sieves. Upon completion of the project, a final check of the total quantity of fertilizer used will be made against total area treated, and if minimum rates of application have not been met, an additional quantity of material sufficient to make up the minimum application rate shall be distributed as directed.

PART 3 EXECUTION

3.1 COMMENCEMENT, PROSECUTION, AND COMPLETION

3.1.1 General

The dressing and turfing operation for embankments shall commence as soon as practicable following the completion of construction in an area. Dressing and turfing operations on other areas shall commence upon completion of all work in that area. Prior to prosecuting the turfing operation, the Contractor shall repair rainwash, if any, dress, and prepare the areas for turfing. All turfing operations shall be accomplished during the season between 1 March and 30 June, or between 1 September and 15 November, inclusive, unless otherwise authorized by the Contracting Officer.

3.1.2 Sequence of Work

The sequence of operations for work prescribed in this section shall be as follows:

(1) Preparation of ground surface.

(2) Fertilizing.

(3) Spot sodding or sprigging.

(4) Compacting, where applicable.

(5) Mulching, where applicable

3.2 PREPARATION OF GROUND SURFACE

3.2.1 General

Equipment, in good condition, shall be provided for the proper preparation of the ground and for handling and placing all materials. Equipment shall be approved by the Contracting Officer before work is stated.

3.2.2 Clearing

Prior to grading and finish dressing, vegetation that may interfere with turfing operations shall be removed and shall be disposed of as specified in SECTION 02114 CLEARING, paragraph 3.2. The surface shall be cleared of roots, cable, wire, and other materials that might hinder the work or subsequent maintenance.

3.2.3 Dressing

Surfaces to be turfed shall be dressed to the extent necessary to provide drainage and the specified slopes, and as necessary to remove high points and fill depressions sufficiently to provide reasonably smooth surfaces. Necessary repairs to previously graded areas shall be made with suitable material placed and compacted as directed by the Contracting Officer. Suitable material for repairs may be obtained from the required excavation or from an off site borrow area as specified in SECTION 02225 EARTHWORK, paragraph 3.3.2.

3.3 SPECIAL EQUIPMENT

Hydraulic equipment used for the application of slurry of prepared wood cellulose fiber mulch shall have a built-in agitation system with an operating capacity sufficient to agitate, suspend, and homogeneously mix a slurry. The slurry distribution lines shall be large enough to prevent stoppage. The discharge line shall be equipped with hydraulic spray nozzles that will provide even distribution of the slurry on the various slopes

to be mulched. The slurry tank shall have a minimum capacity of 1,000 gallons and shall be mounted on a traveling unit, which may be either self-propelled or drawn by a separate unit, that will place the slurry tank and spray nozzles near the areas to be mulched so as to provide uniform distribution without waste. The Contracting Officer may authorize equipment with a smaller tank capacity provided that the equipment has the necessary agitation system and sufficient pump capacity to spray the slurry in a uniform coat over the surface of the area to be mulched.

3.4 APPLICATION OF FERTILIZER AND/OR LIMESTONE (IF USED)

Fertilizer and limestone (if used) shall be distributed uniformly over the areas to be sprigged or spot sodded at the rate determined as specified in 2.2.2 above and shall be incorporated into the soil by light disking, harrowing, or other acceptable methods immediately following the application.

3.5 SPOT SODDING

If the Contractor elects to spot sod, the areas to be turfed shall be spot sodded with Bermuda grass in any manner selected by the Contractor to meet the coverage requirements set forth in paragraph 3.9.1 below.

3.6 SPRIGGING

If the Contractor elects to sprig, the areas to be turfed shall be sprigged with Bermuda grass in any manner selected by the Contractor to meet the coverage requirements set forth in 3.9.1 below.

3.7 APPLYING AND ANCHORING MULCH

Mulch shall be spread uniformly in a continuous blanket, using 2 tons per acre of straw mulch or 1,200 pounds per acre of wood cellulose fiber mulch. Straw mulch shall be spread either by hand or by a manure spreader or by a modified grain combine with straw-spreader attachment or by a blower-type mulch spreader. Mulching shall be started at the windward side of relatively flat areas, or at the upper part of a steep slope, and continued uniformly until the area is covered. The mulch shall not be bunched. Immediately following spreading, straw mulch shall be anchored to the soil by a V-type-wheel land packer, a scalloped-disk or other suitable equipment operated parallel to the embankment centerline. The number of passes needed, not to exceed three, will be determined by the Contracting Officer. Wood cellulose fiber mulch shall be applied with equipment conforming to the requirements of 3.3 above.

3.8 HYDRAULIC SLURRY METHOD

The hydraulic slurry method of fertilizing and mulching, or any combination thereof, may be used by the Contractor, except that in no event shall the mulch be applied prior to fertilizing. Equipment to be used for application of materials by the hydraulic slurry method shall conform to the requirements specified in 3.3 above.

3.9 ESTABLISHMENT

3.9.1 General

Turfing will be considered to be completed when the areas to be turfed show that growth of the specified grass has reached a point of maturity such that it has produced stems or runners which overlap adjacent similar growth over 85 percent of the entire area as determined by random sampling on a square-yard basis with no bare spot exceeding 36 square inches.

3.9.2 Maintenance

The Contractor shall be responsible for the turfed areas while grass is becoming established to the point of acceptance by the Contracting Officer. During establishment and prior to acceptance of the sodded areas, the Contractor shall repair rainwash damage, if any, to the completed embankment at the contract. Turfed areas shall be kept mowed to a height between 4 and 12 inches above the turfed no additional cost to the Government. The turfed areas shall be maintained by mowing for the life of the Contract. Should the Contractor fail to mow the turfed areas to the limits as specified above, the Government will assume the responsibility for the mowing and deduct the cost thereof from any payments due the Contractor.

3.10 INSPECTION AND ACCEPTANCE

3.10.1 General

Acceptance of the turfed areas will be determined by visual inspection. Existence of rainwash damage or dead and dying turf will not be acceptable. Twenty-five percent (25%) of this item cost will retained pending final acceptance of turfing.

3.10.2 Areas Requiring Returfing

Areas being inspected for completion that do not meet the requirements for completion as specified hereinabove shall be returfed at no additional cost to the Government.

-- End of Section --

DIVISION 3 - CONCRETE

THRU

DIVISION 16 - ELECTRICAL

(NOT USED)