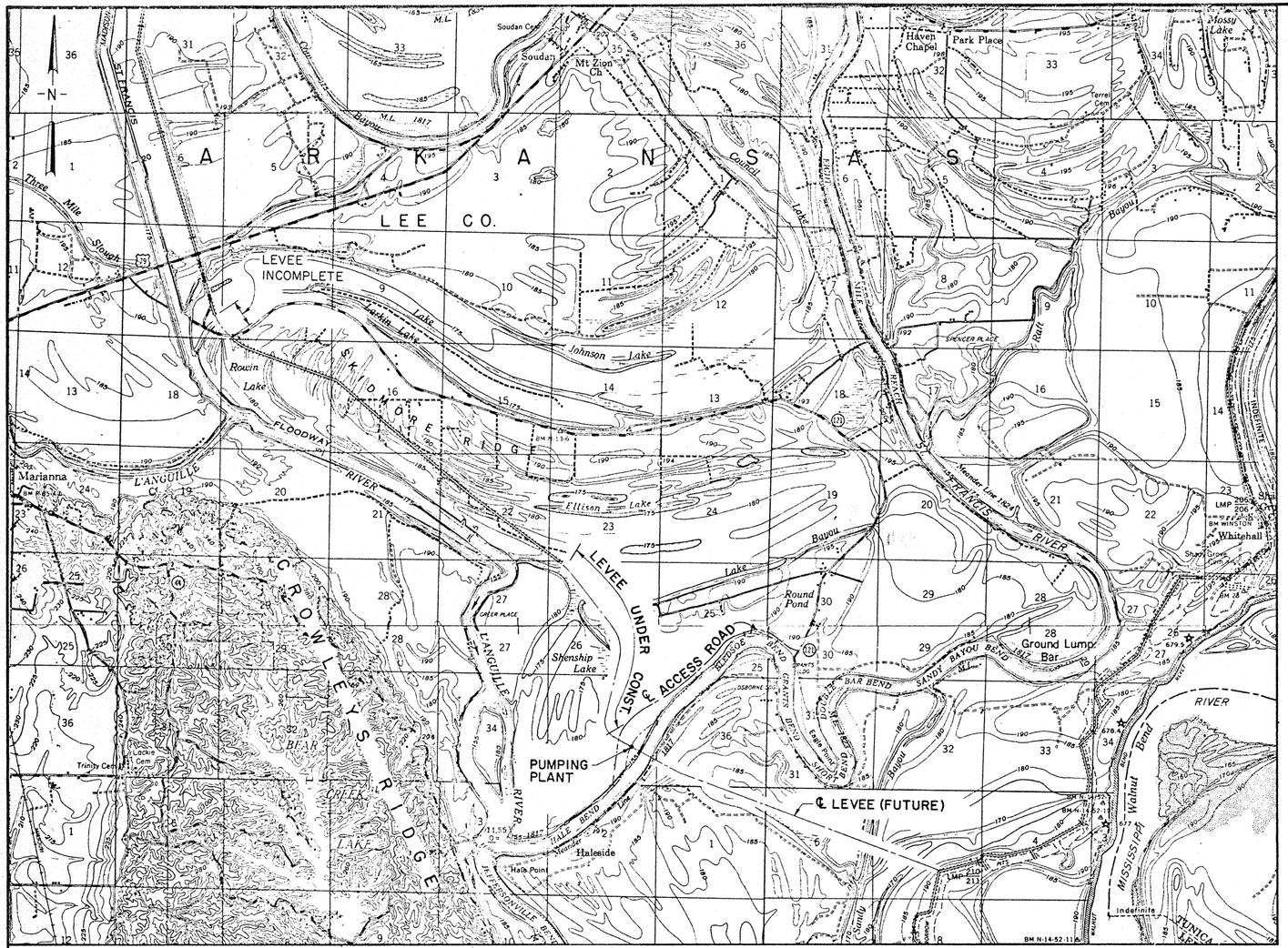

PROJECT LOCATION MAP

SCALE OF MILES

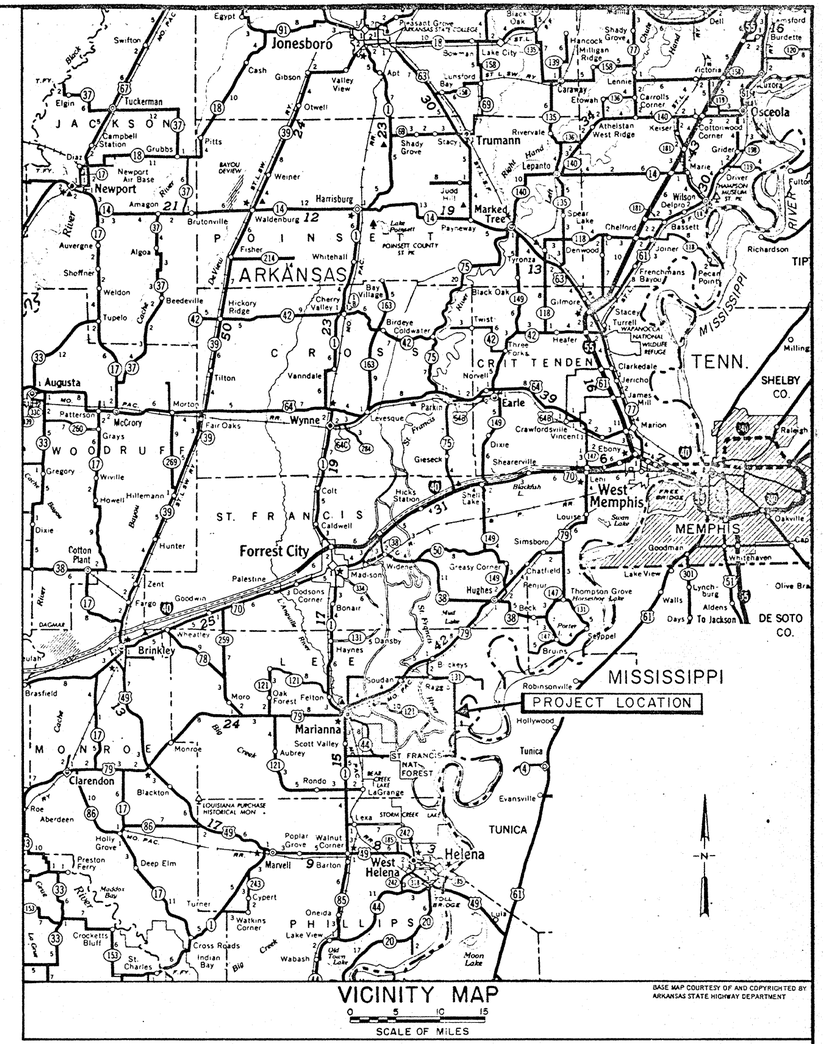

VICINITY MAP

BASE MAP COURTESY OF AND COPYRIGHTED BY ARKANSAS STATE HIGHWAY DEPARTMENT

SCALE OF MILES

SYM	ZONE	REVISIONS	DATE	APPROVED

DESIGN — DESIGNED BY M.E.D. — CHECKED BY S.I.K.

DRAWING — DRAWN BY M.E.D. — CHECKED BY A.C.H.

DATE DEC. 1971

SUBMITTED BY: CHIEF, STRUCTURES SECTION

APPROVAL RECOMMENDED: CHIEF, DESIGN SECTION

DEPARTMENT OF THE ARMY
MEMPHIS DISTRICT, CORPS OF ENGINEERS
MEMPHIS, TENNESSEE

FLOOD CONTROL, MISSISSIPPI RIVER AND TRIBUTARIES
ST FRANCIS BASIN PROJECT — LOWER ST FRANCIS RIVER

W. G. HUXTABLE PUMPING PLANT

GENERAL DRAWING
MAPS

SIZE	CODE IDENT NO	SERIAL	DRAWING NO
F	DACW 66	19617	1-1

FILE 413/3

SCALE AS SHOWN

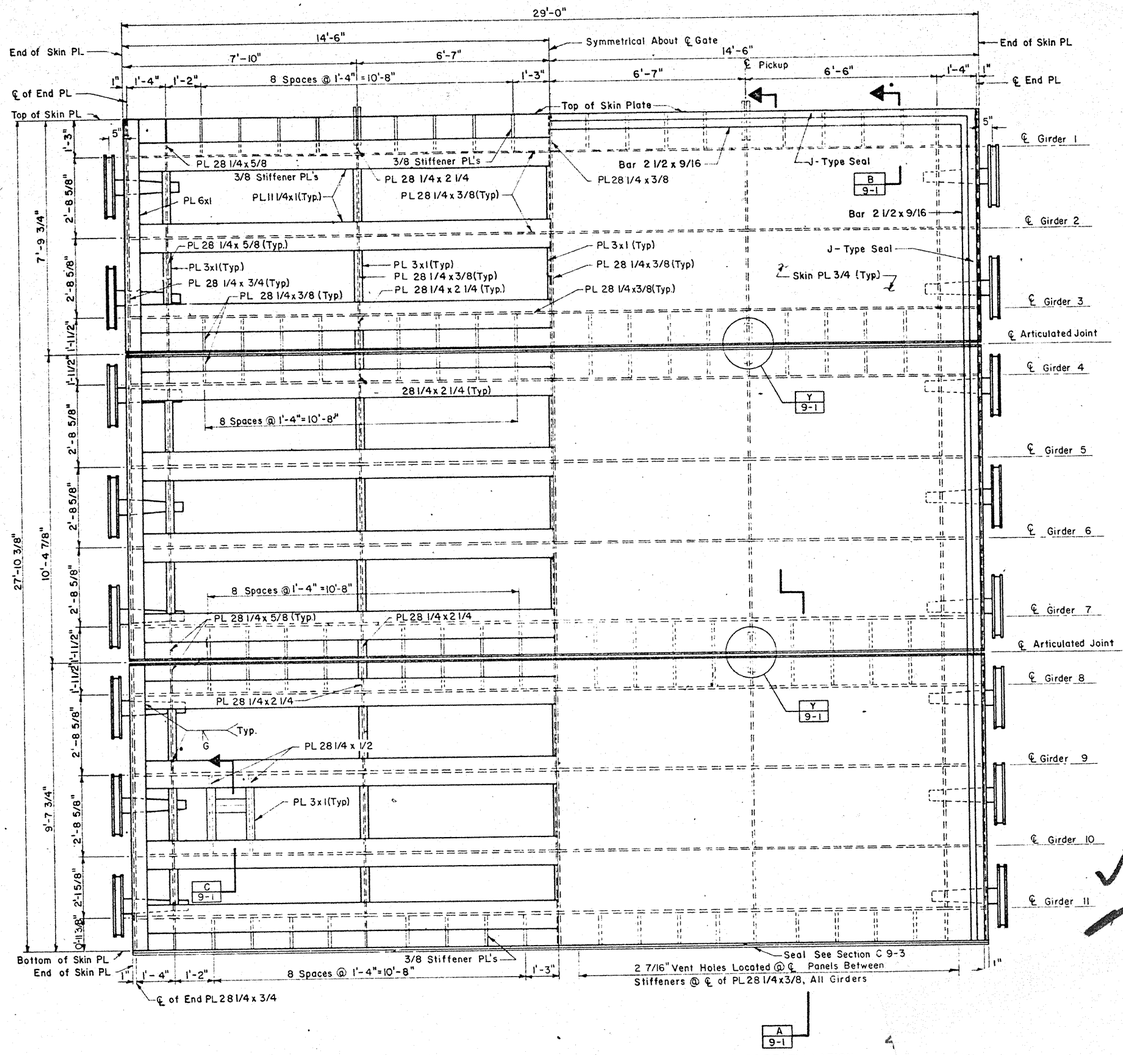

HALF RIVERSIDE ELEVATION

HALF LANDSIDE ELEVATION

GATE

4 REQ'D. SCALE 1/2" = 1'-0"

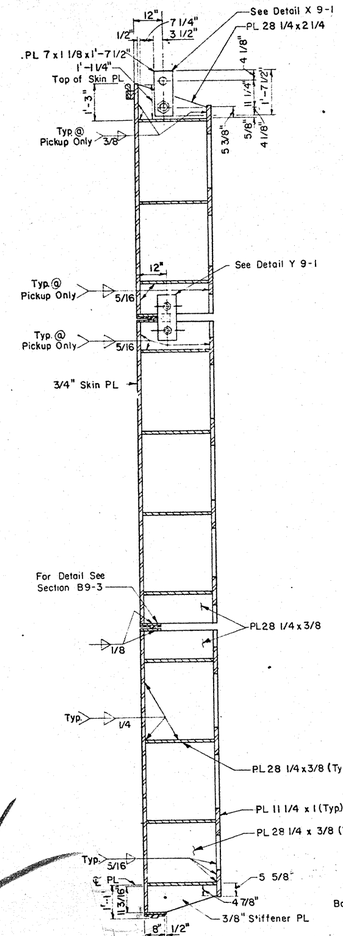

SECTION A 9-1

SCALE 1/2" = 1'-0"

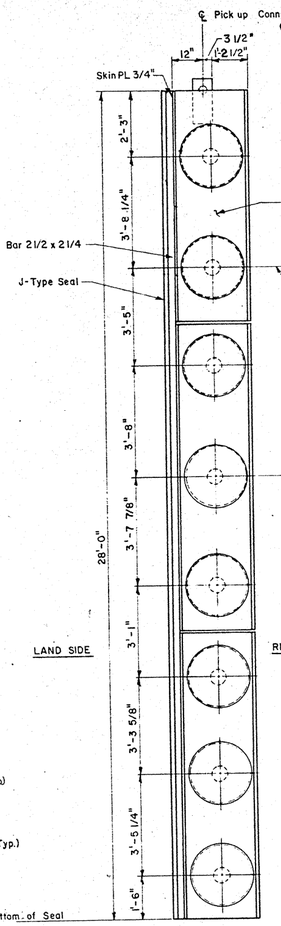

END ELEVATION

SCALE 1/2" = 1'-0"

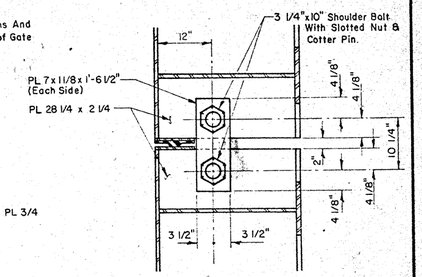

DETAIL Y 9-1

SCALE 1" = 1'-0"

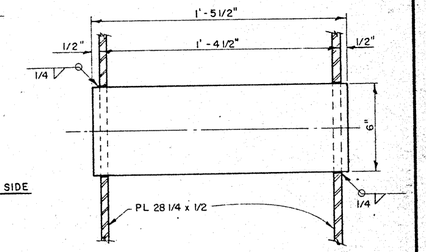

DOGGING BAR DETAIL

ASTM A237-67 Class F MK 9-1 (15)

SCALE 3" = 1'-0"

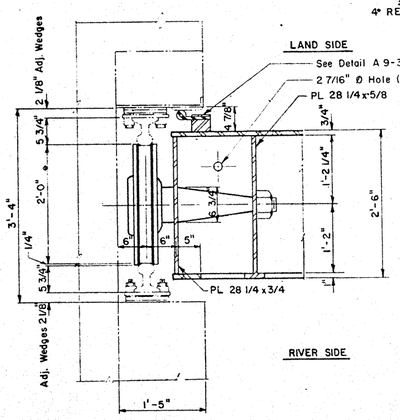

SECTION THRU GATE END

SCALE 1" = 1'-0"

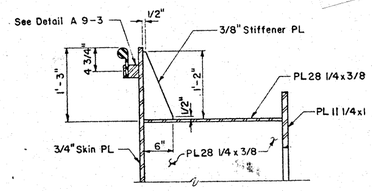

SECTION B 9-1

SCALE 1" = 1'-0"

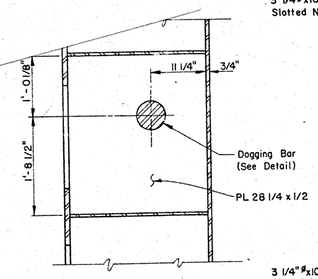

SECTION C 9-1

SCALE 1" = 1'-0"

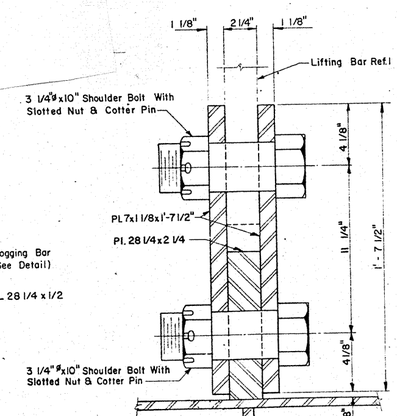

DETAIL X 9-1

SCALE 3" = 1'-0"

SCALE 1/2" = 1'-0"

SCALE 1" = 1'-0"

SCALE 3" = 1'-0"

NOTES:

1. All Structural Steel Except Wheel, Axles And Seal Bars Shall be ASTM Designation A36.
2. All Corners And Edges of Plates in Contact With Rubber Seals Shall be Rounded to 1/8" R. ±
3. All Seal Bolts Shall be 5/8" Dia. Corrosion Resisting Steel (C.R.S.) With Counter-Sunk Heads, Hex. Nuts, And Standard Washers; Maximum Spacing of Seal Bolts 4" Except Where Shown.
4. Skin Plate Welds Shall be Continuous And Watertight.
5. All Fillet Welds Shall be 1/4" Continuous Unless Otherwise Shown.
6. The Surfaces of All Seal Back-up Bars After Welding to The Gate Shall Not Deviate From a True Plane by More Than 1/64" Per Foot And The Maximum Deviation of Any Point From a True Plane Shall Not Exceed 1/32". Machine if Necessary - Finish 125 RMS.
7. J-Seal Shall be Fabricated by Using Molded Corner Pieces And Vulcanized Splices Unless Otherwise Shown.
8. All Seal Thread Cutting Screws Shall be 1/4" ø x 1 1/4" Long C.R.S. Maximum Spacing of Seal Screws 4".
9. All Seal Bars And Plates Shall be C.R.S.
10. All Bolts Shall be C.R.S.

References:

1. See Dwg. 12-41.

SYM.	ZONE	REVISIONS	DATE	APPROVED

DESIGN: DESIGNED BY J.W.M. CHECKED BY L.J.P.

DRAWING: DRAWN BY H.B. CHECKED BY A.C.H.

DATE DEC. 1971

SUBMITTED BY A. B. Mullaney CHIEF, DESIGN SECTION

APPROVAL RECOMMENDED A. B. Turner CHIEF, DESIGN BRANCH

DEPARTMENT OF THE ARMY
MEMPHIS DISTRICT, CORPS OF ENGINEERS
MEMPHIS, TENNESSEE

FLOOD CONTROL, MISSISSIPPI RIVER AND TRIBUTARIES
ST FRANCIS BASIN PROJECT — LOWER ST FRANCIS RIVER

W. G. HUXTABLE PUMPING PLANT

GATES AND BULKHEADS
SERVICE GATE ASSEMBLY

SIZE	CODE IDENT NO.	SERIAL	DRAWING NO.
F	DACW 66	19617	9-1
		FILE 412/117	
		TAFFS	

SCALE AS SHOWN — SHV NO. DACW 66-72-B-0121 DATED 15 MAY 1972 — SHEET

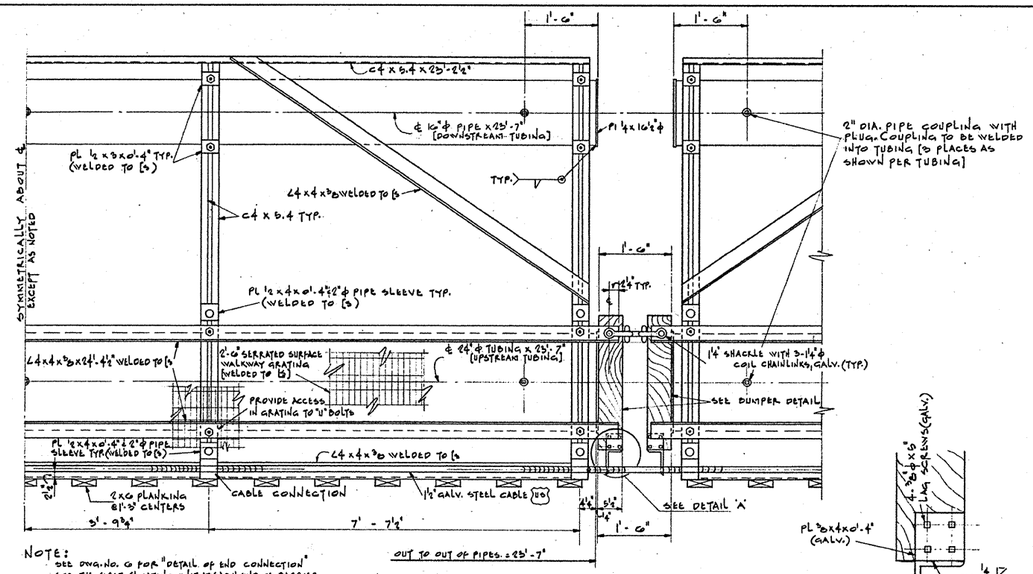

NOTE:
SEE DWG. NO. 6 FOR "DETAIL OF END CONNECTION" FOR THE FIRST FLOATING UNIT AT EACH END OF BARRIER

PLAN
SCALE: 1" = 1'-0"
[21 FLOATING UNITS REQUIRED]

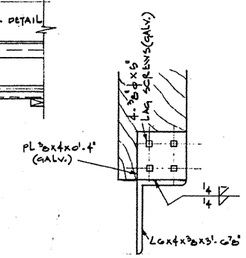

DETAIL A
SCALE: 3" = 1'-0"

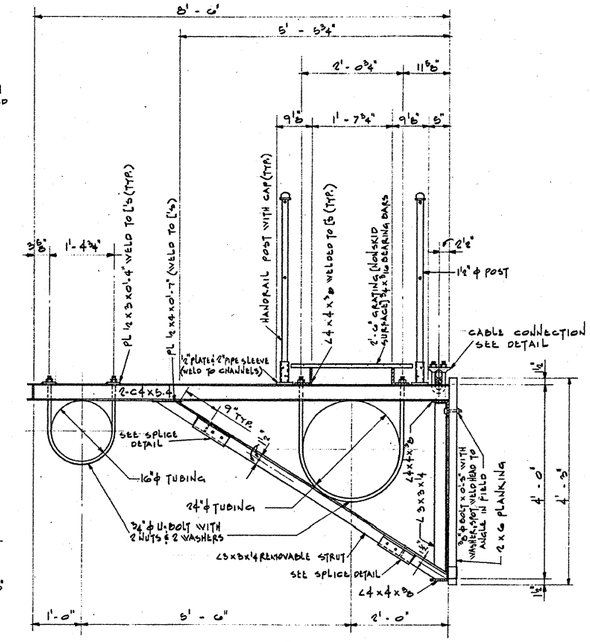

SECTION
SCALE: 1" = 1'-0"

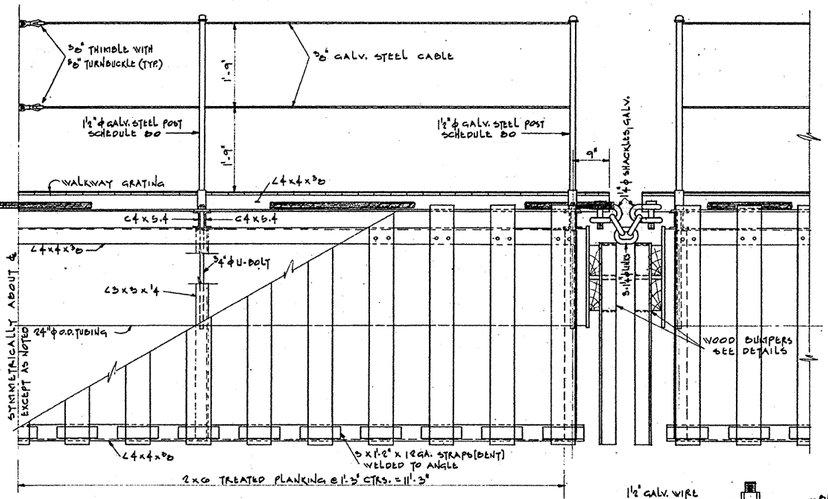

UPSTREAM ELEVATION
SCALE: NONE

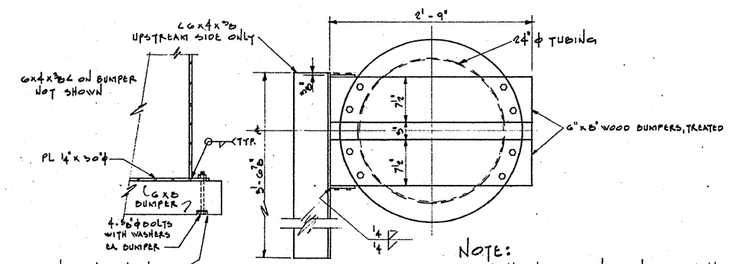

BUMPER DETAILS
SCALE: 1½" = 1'-0"

NOTE:
1. ALL FLOATATION TUBING TO BE FILLED WITH URETHANE FOAM.
2. (NO) - INDICATES GOVERNMENT FURNISHED PROPERTY

SCALE 1½" = 1'-0"

SCALE 1" = 1'-0"

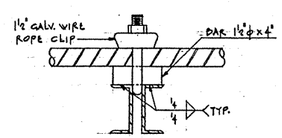

CABLE CONNECTION DETAIL
SCALE: 3" = 1'-0"

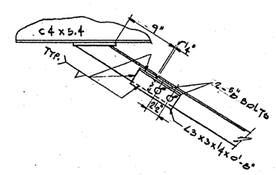

SPLICE DETAIL
SCALE: 1½" = 1'-0"

ALL ELEVATIONS ARE FEET ABOVE MEAN SEA LEVEL

SYM.	ZONE	REVISIONS	DATE	APPROVED

DESIGN	DESIGNED BY J K B CHECKED BY D R W	DEPARTMENT OF THE ARMY MEMPHIS DISTRICT, CORPS OF ENGINEERS MEMPHIS, TENNESSEE
DRAWING	DRAWN BY J S B CHECKED BY J K B	FLOOD CONTROL MISSISSIPPI RIVER AND TRIBUTARIES ST. FRANCIS BASIN PROJECT LOWER ST. FRANCIS RIVER
DATE JULY 1976		W. G. HUXTABLE PUMPING PLANT FLOATING TRASH BARRIER DETAILS OF FLOATING UNITS
SUBMITTED BY CHIEF, STRUCTURE SECTION	SIZE F	CODE IDENT NO. DACW 66
APPROVAL RECOMMENDED CHIEF, DESIGN BRANCH	SCALE AS SHOWN	SERIAL 20796 FILE 41K/368(4) TMFB INV. NO. DACW 66-76-B-0090 DATED 22 JULY 1976
		DRAWING NO. 4
		SHEET 4 OF 6

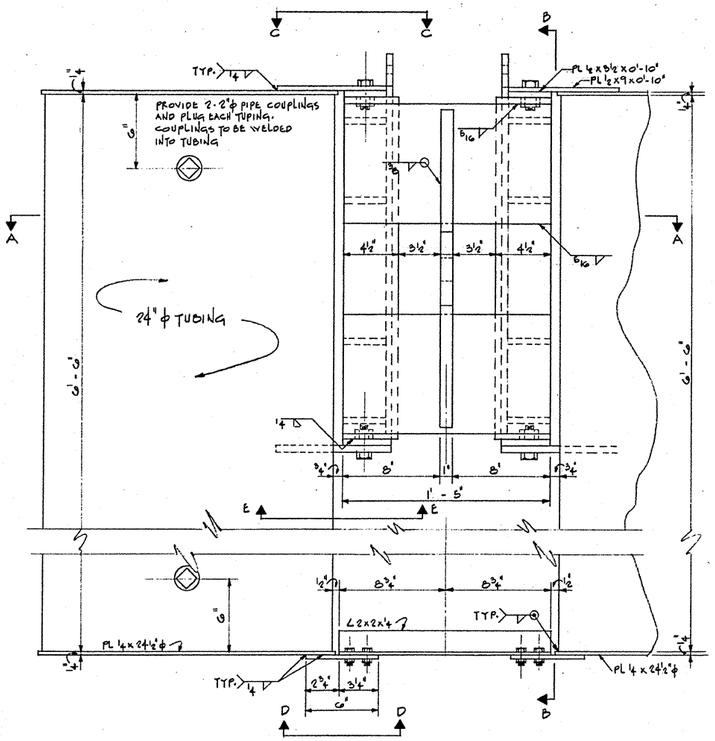

ELEVATION

TROLLEY AND FLOAT DETAILS

(2 REQ'D.)

SCALE: 3" = 1'-0"

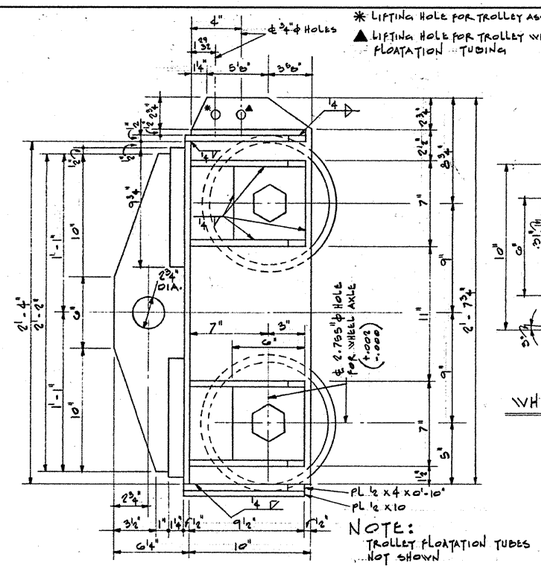

NOTE:
TROLLEY FLOATATION TUBES NOT SHOWN

SECTION B-B

SCALE: 3" = 1'-0"

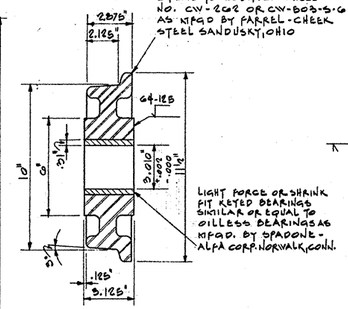

WHEEL CROSS-SECTION

SCALE: NONE

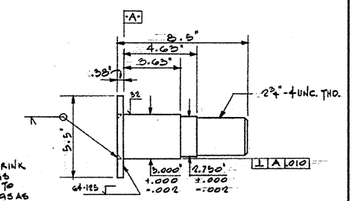

WHEEL AXLE

(MATERIAL 4340 STEEL)

SCALE: NONE

UNLESS SPECIFIED TOLERANCES ARE:

FRACTIONS	± 1/32
ANGLES	± 0° 30'
DEC. .x	± .050
.xx	± .020
.xxx	± .010

NOTE:
1. TROLLEY FLOATATION TUBING TO BE FILLED WITH URETHANE FOAM.

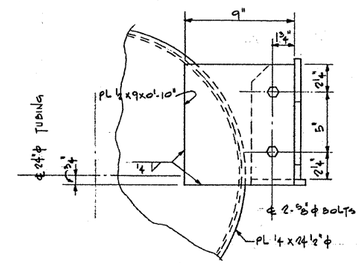

SECTION C-C

SCALE: 3" = 1'-0"

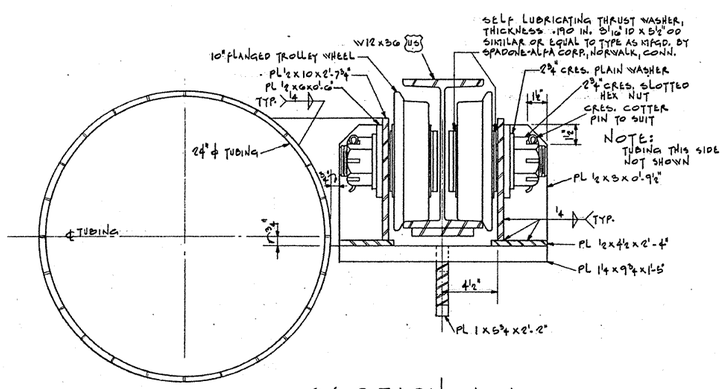

SECTION A-A

SCALE: 3" = 1'-0"

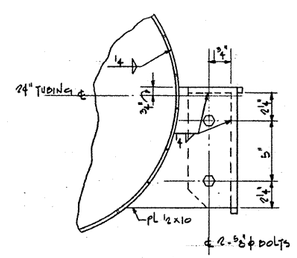

SECTION E-E

SCALE: 3" = 1'-0"

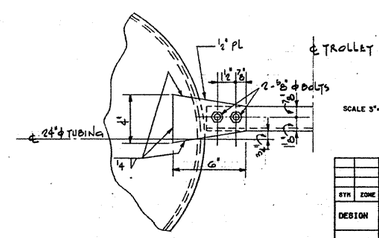

SECTION D-D

SCALE: 3" = 1'-0"

SCALE 3" = 1'-0"

SYM	ZONE	REVISIONS	DATE	APPROVED

DESIGN	DESIGNED BY JKB	DEPARTMENT OF THE ARMY
	CHECKED BY DRW	MEMPHIS DISTRICT, CORPS OF ENGINEERS, MEMPHIS, TENNESSEE
DRAWING	DRAWN BY JSB	FLOOD CONTROL MISSISSIPPI RIVER AND TRIBUTARIES, ST. FRANCIS BASIN PROJECT, LOWER ST. FRANCIS RIVER
	CHECKED BY JKB	W.G. HUXTABLE PUMPING PLANT
DATE JULY 1976		FLOATING TRASH BARRIER
SUBMITTED BY: CHIEF, STRUCTURES SECTION		TROLLEY ASSEMBLY DETAILS
APPROVAL RECOMMENDED: CHIEF, DESIGN BRANCH		

SIZE	CODE IDENT NO.	SERIAL 20796 FILE 41K/365(5) TMFPB	DRAWING NO.
F	DACH 66		5
SCALE AS SHOWN		INT. NO. DACH 68-76-B-0090, DATED 22 JULY 1976	SHEET 5 OF 6

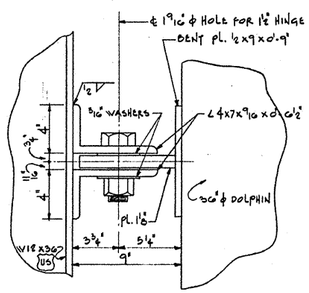

ELEVATION
SCALE: 3" = 1'-0"

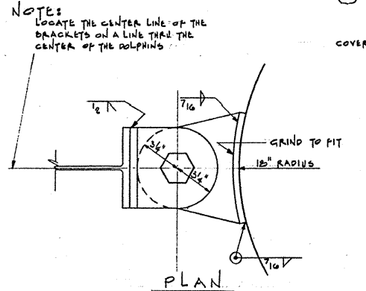

NOTE:
LOCATE THE CENTER LINE OF THE BRACKETS ON A LINE THRU THE CENTER OF THE DOLPHINS

PLAN
BRACKET DETAIL
SCALE: 3" = 1'-0"

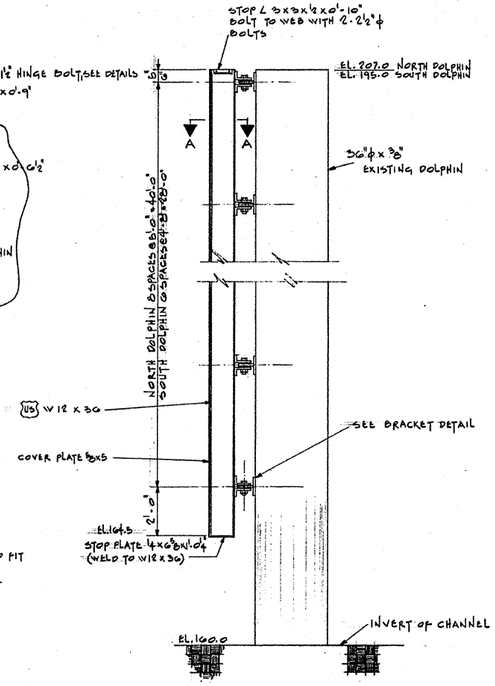

ELEVATION - TROLLEY RAIL
SCALE: ½" = 1'-0"

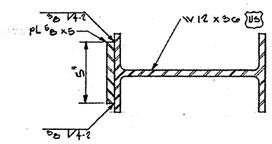

SECTION A-A
SCALE: 3" = 1'-0"

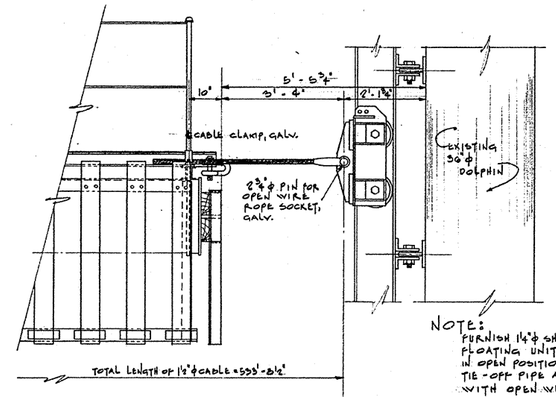

NOTE:
FLOAT TUBES NOT SHOWN

NOTE:
FURNISH 1¼" ϕ SHACKLE FOR DOLPHIN SIDE OF FLOATING UNIT (21) ONLY. TO TIE OFF BARRIER IN OPEN POSITION, WRAP 1½" ϕ CABLE AROUND TIE-OFF PIPE AND SECURE TO SHACKLE WITH OPEN WIRE ROPE SOCKET.

ELEVATION
DETAIL OF END CONNECTION
SCALE: ¾" = 1'-0"

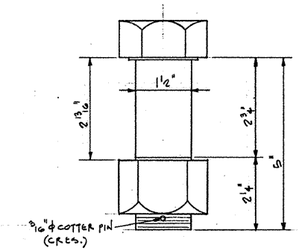

HINGE BOLT DETAIL (CRES.)
SCALE: NONE

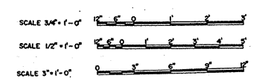

ALL ELEVATIONS ARE FEET ABOVE MEAN SEA LEVEL

SYM	ZONE	REVISIONS	DATE	APPROVED

DESIGN	DESIGNED BY J K B	DEPARTMENT OF THE ARMY MEMPHIS DISTRICT, CORPS OF ENGINEERS MEMPHIS, TENNESSEE
	CHECKED BY D R W	
DRAWING	DRAWN BY J S B	FLOOD CONTROL MISSISSIPPI RIVER AND TRIBUTARIES ST FRANCIS BASIN PROJECT LOWER ST FRANCIS RIVER
	CHECKED BY J K B	W.G. HUXTABLE PUMPING PLANT FLOATING TRASH BARRIER TROLLEY RAIL AND BRACKET DETAILS
DATE JULY 1976		
SUBMITTED BY "CHIEF-STRUCTURES SECTION"		SIZE F · CODE IDENT NO. DACH 66 · SERIAL 20796 FILE 41K/365(6) TAFFS · DRAWING NO. 6
APPROVAL RECOMMENDED CHIEF-DESIGN BRANCH		SCALE AS SHOWN · INV. NO. DACH 66-76-B-0090 DATED 22 JULY 1976 · SHEET 6 OF 6