Memphis District **Invitation for Bid No. DACW66-01-B-0004**

US Army Corps
of Engineers®

Project Title:
DITCH 10 CULVERT
CULVERT PLACEMENT
ST. FRANCIS BASIN-CONSTRUCTION

Location:
MISSISSIPPI COUNTY, ARKANSAS

Construction Solicitation
And Specifications

Date: MAR 2001

TABLE OF CONTENTS

SECTION NO.	DESCRIPTION
00010	SF 1442, BIDDING SCHEDULE, PLANT AND EQUIPMENT SCHEDULE, AFFIRMATIVE ACTION REQUIREMENT, AND WAGE RATES
00100	INSTRUCTIONS TO BIDDERS
00600	REPRESENTATIONS AND CERTIFICATIONS
00700	CONTRACT CLAUSES
00800	SPECIAL CONTRACT REQUIREMENTS
DIVISION 01	GENERAL REQUIREMENTS
01025	MEASUREMENT AND PAYMENT
01090	SOURCES FOR REFERENCE PUBLICATIONS
01130	ENVIRONMENTAL PROTECTION
01330	SUBMITTAL PROCEDURES
01451	CONTRACTOR QUALITY CONTROL
01452	PROJECT SIGN
DIVISION 02	SITE WORK
02210	CLEARING AND GRUBBING
02215	GEOTEXTILES
02216	STONE PROTECTION
02220	DEWATERING
02221	EXCAVATION
02222	BACKFILLS AND EMBANKMENTS
02400	WALL DRAIN SYSTEM
02464	METAL SHEET PILING
02546	AGGREGATE SURFACING
02720	STORM DRAINAGE SYSTEM
02935	TURF
DIVISION 03	CONCRETE
03101	FORMWORK FOR CONCRETE
03210	STEEL BARS FOR CONCRETE REINFORCEMENT
03301	CAST-IN-PLACE STRUCTURAL CONCRETE
DIVISION 04	NOT USED
DIVISION 05	METALS
05055	WELDING, STRUCTURAL
05120	STRUCTURAL STEEL AND MISCELLANEOUS
05914	SLUICE GATE AND GATE LIFT ASSEMBLY

DIVISIONS 06 THROUGH 16 NOT USED

SOLICITATION, OFFER, AND AWARD (Construction, Alteration, or Repair)	1. SOLICITATION NO.	2. TYPE OF SOLICITATION	3. DATE ISSUED	PAGE OF PAGES
	DACW66-01-B-0004	☒ SEALED BID (IFB) ☐ NEGOTIATED (RFP)	03/01/01	

IMPORTANT - The "offer" section on the reverse must be fully completed by offeror.

4. CONTRACT NO.	5. REQUISITION/PURCHASE REQUEST NO.	6. PROJECT NO.
	W38XGR-1033-2409	DACW66-01-B-0004

7. ISSUED BY CODE W38XGR

U S ARMY ENGINEER DISTRICT, MEMPHIS
CONTRACTING DIVISION (CEMVM-CT)
167 NORTH MAIN STREET B202
MEMPHIS, TN 38103-1894

8. ADDRESS OFFER TO

ADDRESS SAME AS BLOCK 7.
HAND DELIVERED BIDS RECEIVED IN ROOM 681, CLIFFORD DAVIS FEDERAL BUILDING, 167 NORTH MAIN STREET, MEMPHIS, TN

9. FOR INFORMATION CALL: ▶	A. NAME	B. TELEPHONE NO. (Include area code) (NO COLLECT CALLS)
	SEE BIDDING SCHEDULE	

SOLICITATION

NOTE: In sealed bid solicitations "offer" and "offeror" mean "bid" and "bidder".

10. THE GOVERNMENT REQUIRES PERFORMANCE OF THE WORK DESCRIBED IN THESE DOCUMENTS (Title, identifying no., date):

The work required is for Ditch 10 Culvert Placement, Mississippi County, Arkansas, St. Francis Basin Project - Construction.

The work consists of furnishing all plant, labor, materials and equipment for clearing and disposal of debris therefrom; excavation, construction of cofferdam, backfill and disposal of materials therefrom; stone protection; reinforced concrete culvert; providing sluice gates and gate lift assemblies; fertilizing and seeding; and environmental protection.

The estimated value of the proposed work is between $500,000.00 to $1,000,000.00.

This solicitation is a total small business set-aside.

11. The Contractor shall begin performance within 10 calendar days and complete it within 180 calendar days after receiving

☐ award, ☒ notice to proceed. This performance period is ☒ mandatory, ☐ negotiable. (See Sec. 00800, Para. 1.1 .)

12A. THE CONTRACTOR MUST FURNISH ANY REQUIRED PERFORMANCE AND PAYMENT BONDS? (If "YES," indicate within how many calendar days after award in Item 12B.)	12B. CALENDAR DAYS
☒ YES ☐ NO	10

13. ADDITIONAL SOLICITATION REQUIREMENTS:

A. Sealed offers in original and 0 copies to perform the work required are due at the place specified in Item 8 by 1430 (hour) local time 04/03/2001 (date). If this is a sealed bid solicitation, offers must be publicly opened at that time. Sealed envelopes containing offers shall be marked to show the offeror's name and address, the solicitation number, and the date and time offers are due.

B. An offer guarantee ☒ is, ☐ is not required.

C. All offers are subject to the (1) work requirements, and (2) other provisions and clauses incorporated in the solicitation in full text or by reference.

D. Offers providing less than 60 calendar days for Government acceptance after the date offers are due will not be considered and will be rejected.

14. NAME AND ADDRESS OF OFFEROR (Include ZIP Code)	15. TELEPHONE NO. (Include area code)
CAGE #: DUNS #:	16. REMITTANCE ADDRESS (Include only if different than Item 14)
CODE FACILITY CODE	

17. The offeror agrees to perform the work required at the prices specified below in strict accordance with the terms of this solicitation, if this offer is accepted by the Government in writing within ____calendar days after the date offers are due. (Insert any number equal to or greater than the minimum requirement stated in Item 13D. Failure to insert any number means the offeror accepts the minimum in Item 13D.)

AMOUNTS ▶

18. The offeror agrees to furnish any required performance and payment bonds.

19. ACKNOWLEDGMENT OF AMENDMENTS

(The offeror acknowledges receipt of amendments to the solicitation - give number and date of each)

AMENDMENT NO.										
DATE										

20A. NAME AND TITLE OF PERSON AUTHORIZED TO SIGN OFFER (Type or print)	20B. SIGNATURE	20C. OFFER DATE

AWARD (To be completed by Government)

21. ITEMS ACCEPTED:

22. AMOUNT	23. ACCOUNTING AND APPROPRIATION DATA

24. SUBMIT INVOICES TO ADDRESS SHOWN IN (4 copies unless otherwise specified) ▶	ITEM	25. OTHER THAN FULL AND OPEN COMPETITION PURSUANT TO ☐ 10 U.S.C. 2304(c) ( ) ☐ 41 U.S.C. 253(c) ( )
26. ADMINISTERED BY CODE		27. PAYMENT WILL BE MADE BY

CONTRACTING OFFICER WILL COMPLETE ITEM 28 OR 29 AS APPLICABLE

☐ 28. NEGOTIATED AGREEMENT (contractor is required to sign this document and return_____ copies to issuing office.) Contractor agrees to furnish and deliver all items or perform all work, requisitions identified on this form and any continuation sheets for the consideration stated in this contract. The rights and obligations of the parties to this contract shall be governed by (a) this contract award, (b) the solicitation, and (c) the clauses, representations, certifications, and specifications incorporated by reference in or attached to this contract.	☐ 29. AWARD (Contractor is not required to sign this document.) Your offer on this solicitation, is hereby accepted as to the items listed. This award consummates the contract, which consists of (a) the Government solicitation and your offer, and (b) this contract award. No further contractual document is necessary.
30A. NAME AND TITLE OF CONTRACTOR OR PERSON AUTHORIZED TO SIGN (Type or print)	31A. NAME OF CONTRACTING OFFICER (Type or print)

30B. SIGNATURE	30C. DATE	31B. UNITED STATES OF AMERICA BY	31C. AWARD DATE

STANDARD FORM 1442 BACK (REV. 4-85)

DITCH 10 CULVERT
CULVERT PLACEMENT
MISSISSIPPI COUNTY, ARKANSAS

SECTION 00010
BIDDING SCHEDULE

ITEM	DESCRIPTION	ESTIMATED QUANTITY	U/M	U/P	AMOUNT
0001	Mobilization & Demobilization	1	LS	XXXX.XX	$_____.___
0002	Environmental Protection	1	LS	XXXX.XX	$_____.___
0003	Clearing and Grubbing	1	LS	XXXX.XX	$_____.___
0004	Excavation	1	LS	XXXX.XX	$_____.___
0005	Dewatering	1	LS	XXXX.XX	$_____.___
0006	Cofferdam	1	LS	XXXX.XX	$_____.___
0007	Geotextile	8,250	SF	_____.__	$_____.___
0008	Riprap, R-90	843	TN	_____.__	$_____.___
0009	Riprap, R-200	247	TN	_____.__	$_____.____
0010	Filter Material	206	TN	_____.__	$_____.___
0011	Pervious Backfill	1	LS	XXXX.XX	$_____.___
0012	Compacted Impervious Backfill	1	LS	XXXX.XX	$_____.___
0013	Semi-Compacted Impervious Backfill	1	LS	XXXX.XX	$_____.___
0014	Sheet Piling	288	SF	_____.__	$_____.___
0015	Reinforced Concrete Pipe	304	LF	_____.__	$_____.___
0016	Precast Flared End Section	2	EA	_____.__	$_____.___
0017	Handrails and Miscellaneous Steel	1	LS	XXXX.XX	$_____.___
0018	Outlet Structure	1	LS	XXXX.XX	$_____.___
0019	Gate Well Structure	1	LS	XXXX.XX	$_____.___
0020	Wall Drain	1	LS	XXXX.XX	$_____.___
0021	Sluice Gates and Gate Lift Assemblies	1	LS	XXXX.XX	$_____.___
0022	Aggregate Surfacing	1	LS	XXXX.XX	$_____.___
0023	Turf	1	LS	XXXX.XX	$_____.___
	Total Items 0001 through 0023				**$_____.___**

(See notes on next page)

LS = Lump Sum	TN = Tons	LF = Linear Foot
SF = Square Foot	CY = Cubic Yards	EA = Each

Lump Sum (LS) units of measure indicate the same designation for a particular item of work including incidental work associated with the item.

Administrative POC: Wendell Norman (901) 544-0775
Wendell.N.Norman@usace.army.mil

Technical POC: Jerry Welch (901) 544-3236
Jerry.R.Welch@usace.army.mil

NOTE: Bidders shall furnish unit prices for all items listed on the schedule of bid items, which require unit prices. If the bidder fails to insert a unit price in the appropriate blank for required items, but does furnish an extended total or an estimated amount for such items, the Government will deem his unit price to be the quotient obtained by dividing the extended estimated amount for that line item by the quantity. IF THE BIDDER OMITS BOTH THE UNIT PRICE AND THE EXTENDED ESTIMATED AMOUNT FOR ANY ITEM, HIS BID WILL BE DECLARED NON-RESONSIVE.

Award will be made as a whole to one bidder.

If a bid or modification to a bid based on unit prices is submitted and provides for a lump sum adjustment to the total estimated cost, the application of the lump sum adjustment to each unit price, including lump sum units, in bid schedule must be stated, or, if it is not stated, the bidder agrees that the lump sum adjustment shall be applied on a pro rata basis to every unit price in the bid schedule.

Bidders are cautioned to read Contract Clause entitled "Required Central Contractor Registration" (252.204-7004) located in Section 00700.

INVITATION: DACW66-01-B-0004

PLANT AND EQUIPMENT SCHEDULE

[TO BE ATTACHED TO BID FORM]

AVAILABLE PLANT TO BE USED

*_____

No.	TYPE	CAPACITY	MANUFACTURER	AGE & CONDTION	LOCATION
			*_____		
			*_____		

*PROVIDE SEPARATE TABLE FOR EACH TYPE OF EQUIPMENT SUCH AS CONCRETE PLANT, MATERIAL HANDLING, HAULING, ETC. USE ADDITIONAL PAGE IF NECESSARY.

ENG FORM 1619-R

NOTICE OF REQUIREMENT FOR AFFIRMATIVE ACTION TO ENSURE EQUAL EMPLOYMENT OPPORTUNITY FOR CONSTRUCTION. (FEB 1999)

a. The offeror's attention is called to the Equal Opportunity Clause and the Affirmative Action Compliance Requirements for Construction clause of this solicitation.

b. The goals for minority and female participation, expressed in percentage terms for the Contractor's aggregate workforce in each trade on all construction work in the covered area, are as follows:

Goals for minority participation for each trade		:	Goals for female participation for each trade
SMSA Counties	32.3	:	
Non-SMSA Counties	26.5	:	6.9

These goals are applicable to all the Contractor's construction work performed in the covered area. If the Contractor performs construction work in a geographical area located outside of the covered area, the Contractor shall apply the goals established for the geographical area where the work is actually performed. Goals are published periodically in the Federal Register in notice form, and these notices may be obtained from any Office of Federal Contract Compliance Programs office.

c. The Contractor's compliance with Executive Order 11246, as amended, and the regulations in 41 CFR 60-4 shall be based on (1) its implementation of the Equal Opportunity clause, (2) specific affirmative action obligations required by the clause entitled "Affirmative Action Compliance Requirements for Construction," and (3) its efforts to meet the goals. The hours of minority and female employment and training must be substantially uniform throughout the length of the contract, and in each trade. The Contractor shall make a good faith effort to employ minorities and women evenly on each of its projects. The transfer of minority or female employees or trainees from Contractor to Contractor, or from project to project, for the sole purpose of meeting the Contractor's goals shall be a violation of the contract, Executive Order 11246, as amended, and the regulations in 41 CFR 60-4. Compliance with the goals will be measured against the total work hours performed.

d. The Contractor shall provide written notification to the Deputy Assistant Secretary for Federal Contract Compliance, U.S. Department of Labor, within 10 working days following award of any construction subcontract in excess of $10,000 at any tier for construction work under the contract resulting from this solicitation. The notification shall list the -

(1) Name, address and telephone number of the subcontractor;

(i) Employer identification number of the subcontractor:

(2) Estimated dollar amount of the subcontract;

(3) Estimated starting and completion dates of the subcontract; and

(4) Geographical area in which the subcontract is to be performed.

e. As used in this Notice, and in the contract resulting from this Solicitation, the "covered area" is Economic Area 055, Memphis, TN, as follows:

SMSA Counties:

4920 Memphis, TN-AR-MS----------32.3
AR Crittenden; MS DeSoto, TN Shelby, TN Tipton

Non-SMSA Counties.....26.5

AR Clay; AR Craighead; AR Cross, AR Greene; AR Lawrence; AR Lee,
AR Mississippi; AR Phillips, AR Poinsett; AR Randolph; AR St. Francis;
MS Alcorn; MS Benton; MS Bolivar; MS Clahoun; MS Carroll;
MS Chickasaw; MS Clay; MS Coahoma; MS Grenada; MS Itawamba;
MS Lafayette; MS Lee; MS Leflore; MS Marshall; MS Monroe;
MS Montgomery; MS Panola; MS Pontotoc; MS Prentiss; MS Quitman;
MS Sunflower; MS Tallahatchie; MS Tate; MS Tippah; MS Tishomingo;
MS Union; MS Washington; MS Webster; MS Yalobusha; MO Dunklin;
MO New Madrid; MO Pemiscot, TN Benton; TN Carroll, TN Chester;
TN Crockett; TN Decator; TN Dyer; TN Fayette, TN Gibson; TN Hardeman
TN Hardin; TN Haywood; TN Henderson; TN Henry; TN Lake;
TN Lauderdale; TN McNairy; TN Madison; TN Obion;
TN Weakley.

(FAR 52.222-23)

General Decision Number AR000044

General Decision Number AR000044
Superseded General Decision No. AR990044
State: Arkansas Construction Type:
HEAVY
SEWER AND WATER LINE
County(ies):

ARKANSAS	GARLAND	OUACHITA
ASHLEY	GRANT	PERRY
BAXTER	GREENE	PHILLIPS
BENTON	HEMPSTEAD	PIKE
BOONE	HOT SPRING	POINSETT
BRADLEY	HOWARD	POLK
CALHOUN	INDEPENDENCE	POPE
CARROLL	IZARD	PRAIRIE
CHICOT	JACKSON	RANDOLPH
CLARK	JOHNSON	SCOTT
CLAY	LAFAYETTE	SEARCY
CLEBURNE	LAWRENCE	SEBASTIAN
CLEVELAND	LEE	SEVIER
COLUMBIA	LINCOLN	SHARP
CONWAY	LITTLE RIVER	ST FRANCIS
CRAIGHEAD	LOGAN	STONE
CRAWFORD	MADISON	UNION
CRITTENDEN	MARION	VAN BUREN
CROSS	MILLER	WASHINGTON
DALLAS	MISSISSIPPI	WHITE
DESHA	MONROE	WOODRUFF
DREW	MONTGOMERY	YELL
FRANKLIN	NEVADA	
FULTON	NEWTON	

HEAVY CONSTRUCTION PROJECTS (Includes Sewer and Water Line Construction Projects)

Modification Number	Publication Date
0	02/11/2000

COUNTY(ies):

ARKANSAS	GARLAND	OUACHITA
ASHLEY	GRANT	PERRY
BAXTER	GREENE	PHILLIPS
BENTON	HEMPSTEAD	PIKE
BOONE	HOT SPRING	POINSETT
BRADLEY	HOWARD	POLK
CALHOUN	INDEPENDENCE	POPE
CARROLL	IZARD	PRAIRIE
CHICOT	JACKSON	RANDOLPH
CLARK	JOHNSON	SCOTT
CLAY	LAFAYETTE	SEARCY
CLEBURNE	LAWRENCE	SEBASTIAN
CLEVELAND	LEE	SEVIER
COLUMBIA	LINCOLN	SHARP
CONWAY	LITTLE RIVER	ST FRANCIS
CRAIGHEAD	LOGAN	STONE
CRAWFORD	MADISON	UNION

CRITTENDEN	MARION	VAN BUREN
CROSS	MILLER	WASHINGTON
DALLAS	MISSISSIPPI	WHITE
DESHA	MONROE	WOODRUFF
DREW	MONTGOMERY	YELL
FRANKLIN	NEVADA	
FULTON	NEWTON	

SUAR2001B 01/19/1990

	Rates	Fringes
BRICKLAYERS	7.20	
CARPENTERS	7.20	
CONCRETE FINISHERS	7.20	
ELECTRICIANS	8.75	
IRONWORKERS:		
Structural	6.30	
Reinforcing	5.45	
LABORERS:		
Air tool operators	5.15	
Asphalt heater operators	5.15	
Asphalt rakers	5.85	
Chain saw oeprators	5.15	
Checker graders	5.45	
Concrete joint sealers	5.15	
Concrete saw operators	5.15	
Formsetters	5.45	
Laborers	5.15	
Pipelayers	5.45	
Powdermen	6.40	
Vibratormen	5.15	
PAINTERS	6.20	
PILE DRIVER LEADMEN	6.20	
POWER EQUIPMENT OPERATORS:		
Aggregate Spreader operators	5.80	
Asphalt plant firemen	5.15	
Asphalt plantdriver operators	5.15	
Batch plant operators	5.80	
Bulldozer Operators:		
Finish	6.90	
Rough	5.65	
Bull Float operators	5.65	
Concrete curing machine operators	5.65	
Concrete mixer operators:		
Less than 5 sacks	5.15	
5 sacks and over	6.20	
Backhoe Operator - Rubber tired (1 yard or less)	6.10	
Cherry picker operators	6.10	
Concrete paver operators	6.70	
Concrete sperader operators	6.70	
Crane, Derrick, Dragline, Shovel, Backhoe, Operators		
1-1/2 yards or less	6.70	
over 1-1/2 yards	7.20	
Crusher operators	5.65	
Distributor operators	5.65	
Drill operators (Wagon or truck)	5.65	

Elevating Grader operators	6.70
Euclid or like equipment operator (Bottom or end dump)	5.25
Finishing Machine Operators	6.10
Flaggers	5.15
Forkliff operators	5.15
Form grader operators	5.15
Front end loader operators	
Finish	6.70
Rough	5.65
Hdro Seeder operators	5.15
Mechanics	6.90
Motor Patrol Operators:	
Finish	6.90
Rough	5.65
Mulching machine operators	5.15
Oilers and Greasers	5.45
Piledriver operators	6.20
Power broom operators	5.15
Pug mill operators	5.15
Roller Operators (self propelled)	5.25
Scraper Operators:	
Finish	6.90
Rough	5.65
Sod slicing machine operators	5.15
Stabilizer mixing machine operators	5.65
Tractor operators (crawler type)	5.15
Tractor operators (farm and sheel)	5.15
Tractor operators-wheel type (with attach.-1 yd. or under)	5.55
Trenching Machine operators	5.55
STONEMASONS	7.20
TRUCK DRIVERS:	
Distributor truck drivers	5.45
Semi-trailer	5.45
Lowboy drivers	5.65
Transit mix truck drivers	5.45
Truck Drivers (heavy-maximum pay load in excess of 3,000 lbs.)	5.15
Truck Drivers (light-maximum pay load 3,000 lbs.)	5.15
WELL DRILLERS	6.90

WELDERS - Receive rate prescribed for craft performing operation to which welding is incidental.

==========

Unlisted classifications needed for work not included within the scope of the classifications listed may be added after award only as provided in the labor standards contract clauses (29 CFR?5.5(a

WAGE DETERMINATION APPEALS PROCESS

1.) Has there been an initial decision in the matter? This can

be:

* an existing published wage determination
* a survey underlying a wage determination
* a Wage and Hour Division letter setting forth a position on a wage determination matter
* a conformance (additional classification and rate) ruling

On survey related matters, initial contact, including requests for summaries of surveys, should be with the Wage and Hour Regional Office for the area in which the survey was conducted because those Regional Offices have responsibility for the Davis-Bacon survey program. If the response from this initial contact is not satisfactory, then the process described in 2.) and 3.) should be followed.

With regard to any other matter not yet ripe for the formal process described here, initial contact should be with the Branch of Construction Wage Determinations. Write to:

Branch of Construction Wage Determinations
Wage and Hour Division
U. S. Department of Labor
200 Constitution Avenue, N. W.
Washington, D. C. 20210

2.) If the answer to the question in 1.) is yes, then an interested party (those affected by the action) can request review and reconsideration from the Wage and Hour Administrator (See 29 CFR Part 1.8 and 29 CFR Part 7). Write to:

Wage and Hour Administrator
U.S. Department of Labor
200 Constitution Avenue, N. W.
Washington, D. C. 20210

The request should be accompanied by a full statement of the interested party’s position and by any information (wage payment data, project description, area practice material, etc.) that the requestor considers relevant to the issue.

3.) If the decision of the Administrator is not favorable, an interested party may appeal directly to the Administrative Review Board (formerly the Wage Appeals Board). Write to:

Administrative Review Board
U. S. Department of Labor
200 Constitution Avenue, N. W.
Washington, D. C. 20210

4.) All decisions by the Administrative Review Board are final.

END OF GENERAL DECISION

SECTION 00100
INSTRUCTIONS TO BIDDERS
TABLE OF CONTENTS

52.0-4019 PREAWARD INFORMATION 1
52.0-4047 SITE OF THE WORK 1
52.0-4048 QUANTITY ESTIMATES 2
52.0-4049 CONDITIONS AFFECTING THE WORK 2
52.0-4055 NEGOTIATIONS AFTER SEALED BIDDING 2
52.0-4058 PROGRAM DATA 3
52.0-4060 REVISION AND AMENDMENT TO SOLICITATION FOR BIDS 3
(FAR 52.236-27) SITE VISIT (CONSTRUCTION) (ALTERNATE I) (FEB 1995) 4
52.204-6 DATA UNIVERSAL NUMBERING SYSTEM (DUNS) NUMBER (JUN 1999) 4
52.211-2 AVAILABILITY OF SPECIFICATIONS LISTED IN THE DOD INDEX OF SPECIFICATIONS AND STANDARDS (DODISS) AND DESCRIPTIONS LISTED IN THE ACQUISITION MANAGEMENT SYSTEMS AND DATA REQUIREMENTS CONTROL LIST, DOD 5010.12-L (DEC 1999) 5
52.214-1 SOLICITATION DEFINITIONS--SEALED BIDDING (JUL 1987) 5
52.214-3 AMENDMENTS TO INVITATIONS FOR BIDS (DEC 1989) 6
52.214-4 FALSE STATEMENTS IN BIDS (APR 1984) 6
52.214-5 SUBMISSION OF BIDS (MAR 1997) 6
52.214-6 EXPLANATION TO PROSPECTIVE BIDDERS (APR 1984) 7
52.214-7 LATE SUBMISSIONS, MODIFICATIONS, AND WITHDRAWALS OF BIDS (NOV 1999) 7
52.214-18 PREPARATION OF BIDS--CONSTRUCTION (APR 1984) 8
52.214-19 CONTRACT AWARD--SEALED BIDDING--CONSTRUCTION (AUG 1996) 9
52.214-34 SUBMISSION OF OFFERS IN THE ENGLISH LANGUAGE (APR 1991) 9
52.214-35 SUBMISSION OF OFFERS IN U.S. CURRENCY (APR 1991) 9
52.214-5000 APPARENT CLERICAL MISTAKES (MAR 1995)—EFARS 9
52.216-1 TYPE OF CONTRACT (APR 1984) 10
52.225-10 NOTICE OF BUY AMERICAN ACT/BALANCE OF PAYMENTS PROGRAM REQUIREMENT--CONSTRUCTION MATERIALS (FEB 2000) 10
52.228-1 BID GUARANTEE (SEP 1996) 11
52.233-2 SERVICE OF PROTEST (AUG 1996) 12
52.252-1 SOLICITATION PROVISIONS INCORPORATED BY REFERENCE (FEB 1998) 12
252.204-7001 COMMERCIAL AND GOVERNMENT ENTITY (CAGE) CODE REPORTING (AUG 1999) 12
252.236-7008 CONTRACT PRICES - BIDDING SCHEDULES. (DEC 1991) 13

SECTION 00100
INSTRUCTIONS TO BIDDERS

CLAUSES INCORPORATED BY FULL TEXT:

52.0-4019 PREAWARD INFORMATION

Each bidder shall, upon request of the Contracting Officer, furnish a statement of whether he is now or ever has been engaged in any work similar to that covered by the specifications herein, the dollar value thereof, the year in which such work was performed, and the manner of its execution and giving such other information as will tend to show the bidder's ability to prosecute the required work. The "such other information" referred to above shall include but is not limited to the following:

(a) The name and address of the office or firm under which such similar work was performed.

(b) A list of key personnel available for the instant project and their qualifications.

(c) A copy of bidder's latest financial statement, including the names of banks or other financial institutions with which the bidder conducts business. If the financial statement is more than 60 days old, a certificate should be attached stating that financial condition is substantially the same, or if not the same, the changes that have taken place. Such statement will be treated as confidential.

(d) A list of present commitments, including the dollar value thereof, and name of office under which work is being performed.

52.0-4047 SITE OF THE WORK

Bidders are advised that for the purpose of applicability of the Davis-Bacon Act and other contract labor standards provisions, "the site of the work" under the contract to be awarded pursuant to the solicitation may not be limited to the physical place(s) where the construction called for in the contract will remain when work on it has been completed. The "site of the work" may include other adjacent or nearby property used by the contractor or subcontractors during such construction. For example, fabrication plants, mobile factories, batch plants, borrow pits, job headquarters, tool yards, etc., will be considered part of the site of the work, provided

they are dedicated exclusively or nearly so to performance on the contract and are located in proximity to the actual construction location that it would be reasonable to include them.

52.0-4048 QUANTITY ESTIMATES

Estimates of quantities involved in certain items of work for which bids are being solicited on a lump sum or job basis have been made for the use of the Government. Copies of these quantity estimates may be obtained from the U S Army Engineer District Memphis, 167 North Main Street, Room 762, Memphis, Tennessee 38103-1894, telephone 901/544-3236, or visit our website at http://www.mvm.usace.army.mil/

It is to be expressly understood that the accuracy of these estimates is in no way warranted and that the furnishing of this information to a bidder will not relieve him of his responsibility to estimate the quantities involved. It is further to be expressly understood that in no case will such estimate be used as a basis of claim against the Government.

52.0-4049 CONDITIONS AFFECTING THE WORK

Bidders should visit the site and take such other steps as may be reasonably necessary to ascertain the nature and location of the work, and the general and local conditions which can affect the work or the cost thereof. Failure to do so will not relieve bidders from responsibility for estimating properly the difficulty or cost of successfully performing the work. The Government will assume no responsibility for any understanding or representations concerning conditions made by any of its officers or agents prior to the execution of the contract, unless included in the Solicitation, the specifications, or related documents.

52.0-4055 NEGOTIATIONS AFTER SEALED BIDDING

(a) This clause applies if after bid opening the Contracting Officer determines that all otherwise acceptable bids received are at unreasonable prices, or only one bid is received and the Contracting Officer cannot determine the reasonableness of the bid price, or no responsive bid has been received from a responsible bidder; or the bids were not independently arrived at in open competition, were collusive, or were submitted in bad faith.

(b) The Government has the option to reject all bids received in response to the sealed bid advertisement and initiate

negotiation. Negotiations will include soliciting offers from each responsible bidder that submits a bid in response to the solicitation.

(c) If after bid opening the Contracting Officer determines under (a) above that negotiations are in the best interest of the Government, the following steps will be followed:

(1) An amendment to the sealed bid advertisement will be issued to each responsible bidder changing the solicitation number to a request for proposal number. The amendment will also make any necessary changes to the scope of work.

(2) A cover letter signed by the negotiator will accompany the amendment explaining the procedures to be followed during negotiations.

(3) In the event there is only one responsible bidder under the initial sealed bid solicitation, cost or pricing data requirements set forth in FAR 15.804 will apply as will clause FAR 52.215-2, "Audit and Records - Negotiation".

52.0-4058 PROGRAM DATA

AUTHORITY: The work provided for herein is authorized by the Flood Control Act approved 15 JUN 1936, as amended.

52.0-4060 REVISION AND AMENDMENT TO SOLICITATION FOR BIDS

The right is reserved, as the interest of the Government may require, to revise or amend the specifications or drawings or both prior to the date set for opening bids. Such revisions and amendments, if any, will be announced by an amendment or amendments to this Solicitation for Bids. If revisions and amendments are of a nature which requires material changes in quantities or prices bid or both, the date set for opening bids may be postponed by such number of days as in the opinion of the issuing officer will enable bidders to revise their bids. In such cases, the amendment will include an announcement of new date for opening bids.

(FAR 52.236-27) SITE VISIT (CONSTRUCTION) (ALTERNATE I) (FEB 1995)

(a) The clauses at 52.236-2, Differing Site Conditions, and 52.236-3, Site Investigations and Conditions Affecting the Work, will be included in any contract awarded as a result of this solicitation. Accordingly, bidders are urged and expected to inspect the site where the work will be performed.

(b) Two organized site visits have been scheduled for March 20, 2001 and March 27, 2001.

(c) Bidders desiring a site visit shall contact the Area Engineer at least one day prior to the scheduled site visit.

NAME: Donald R. Tutor
Area Engineer

ADDRESS: Wynne Area Office
1932 N. Falls Boulevard
P. O. Box 729
Wynne, Arkansas 72396-0729

TELEPHONE: 901/544-3851 or 870/238-7983

COLLECT TELEPHONE CALLS WILL NOT BE ACCEPTED.

(End of Provision)

52.204-6 DATA UNIVERSAL NUMBERING SYSTEM (DUNS) NUMBER (JUN 1999)

(a) Contractor identification is essential for complying with statutory contract reporting requirements. Therefore, the offeror is requested to enter, in the block with its name and address on the Standard Form 33 or similar document, the annotation "DUNS" followed by the DUNS number which identifies the offeror's name and address exactly as stated in the offer.

(b) If the offeror does not have a DUNS number, it should contact Dun and Bradstreet directly to obtain one. A DUNS number will be provided immediately by telephone at no charge to the offeror. For information on obtaining a DUNS number, the offeror, if located within the United States, should call Dun and Bradstreet at 1-800-333-0505. The offeror should be prepared to provide the following information:

(1) Company name.

(2) Company address.

(3) Company telephone number.

(4) Line of business.

(5) Chief executive officer/key manager.

(6) Date the company was started.

(7) Number of people employed by the company.

(8) Company affiliation.

(c) Offerors located outside the United States may obtain the location and phone number of the local Dun and Bradstreet Information Services office from the Internet Home Page at http://www.customerservice@dnb.com/. If an offeror is unable to locate a local service center, it may send an e-mail to Dun and Bradstreet at globalinfo@dnb.com.

(End of provision)

52.211-2 AVAILABILITY OF SPECIFICATIONS LISTED IN THE DOD INDEX OF SPECIFICATIONS AND STANDARDS (DODISS) AND DESCRIPTIONS LISTED IN THE ACQUISITION MANAGEMENT SYSTEMS AND DATA REQUIREMENTS CONTROL LIST, DOD 5010.12-L (DEC 1999)

Copies of specifications, standards, and data item descriptions cited in this solicitation may be obtained--

(a) From the ASSIST database via the Internet at http://assist.daps.mil; or

(b) By submitting a request to the--Department of Defense Single Stock Point (DoDSSP), Building 4, Section D, 700 Robbins Avenue, Philadelphia, PA 19111-5094, Telephone (215) 697-2667/2179, Facsimile (215) 697-1462.

(End of provision)

52.214-1 SOLICITATION DEFINITIONS--SEALED BIDDING (JUL 1987)

"Government" means United States Government.

"Offer" means "bid" in sealed bidding.

"Solicitation" means an invitation for bids in sealed bidding.

(End of provision)

52.214-3 AMENDMENTS TO INVITATIONS FOR BIDS (DEC 1989)

(a) If this solicitation is amended, then all terms and conditions which are not modified remain unchanged.

(b) Bidders shall acknowledge receipt of any amendment to this solicitation (1) by signing and returning the amendment, (2) by identifying the amendment number and date in the space provided for this purpose on the form for submitting a bid, (3) by letter or telegram, or (4) by facsimile, if facsimile bids are authorized in the solicitation. The Government must receive the acknowledgment by the time and at the place specified for receipt of bids.

(End of provision)

52.214-4 FALSE STATEMENTS IN BIDS (APR 1984)

Bidders must provide full, accurate, and complete information as required by this solicitation and its attachments. The penalty for making false statements in bids is prescribed in 18 U.S.C. 1001.

(End of provision)

52.214-5 SUBMISSION OF BIDS (MAR 1997)

(a) Bids and bid modifications shall be submitted in sealed envelopes or packages (unless submitted by electronic means) (1) addressed to the office specified in the solicitation, and (2) showing the time and date specified for receipt, the solicitation number, and the name and address of the bidder.

(b) Bidders using commercial carrier services shall ensure that the bid is addressed and marked on the outermost envelope or wrapper as prescribed in subparagraphs (a)(1) and (2) of this provision when delivered to the office specified in the solicitation.

(c) Telegraphic bids will not be considered unless authorized by the solicitation; however, bids may be modified or withdrawn by written or telegraphic notice.

(d) Facsimile bids, modifications, or withdrawals, will not be considered unless authorized by the solicitation.

(e) Bids submitted by electronic commerce shall be considered only if the electronic commerce method was specifically stipulated or permitted by the solicitation.

52.214-6 EXPLANATION TO PROSPECTIVE BIDDERS (APR 1984)

Any prospective bidder desiring an explanation or interpretation of the solicitation, drawings, specifications, etc., must request it in writing soon enough to allow a reply to reach all prospective bidders before the submission of their bids. Oral explanations or instructions given before the award of a contract will not be binding. Any information given a prospective bidder concerning a solicitation will be furnished promptly to all other prospective bidders as an amendment to the solicitation, if that information is necessary in submitting bids or if the lack of it would be prejudicial to other prospective bidders.

(End of provision)

52.214-7 LATE SUBMISSIONS, MODIFICATIONS, AND WITHDRAWALS OF BIDS (NOV 1999)

(a) Bidders are responsible for submitting bids, and any modifications or withdrawals, so as to reach the Government office designated in the invitation for bids (IFB) by the time specified in the IFB. If no time is specified in the IFB, the time for receipt is 4:30 p.m., local time, for the designated Government office on the date that bids are due.

(b)(1) Any bid, modification, or withdrawal received at the Government office designated in the IFB after the exact time specified for receipt of bids is “late” and will not be considered unless it is received before award is made, the Contracting Officer determines that accepting the late bid would not unduly delay the acquisition; and--

(i) If it was transmitted through an electronic commerce method authorized by the IFB, it was received at the initial point of entry to the Government infrastructure not later than 5:00 p.m. one working day prior to the date specified for receipt of bids; or

(ii) There is acceptable evidence to establish that it was received at the Government installation designated for receipt of bids and was under the Government's control prior to the time set for receipt of bids.

(2) However, a late modification of an otherwise successful bid that makes its terms more favorable to the Government, will be considered at any time it is received and may be accepted.

(c) Acceptable evidence to establish the time of receipt at the Government installation includes the time/date stamp of that installation on the bid wrapper, other documentary

evidence of receipt maintained by the installation, or oral testimony or statements of Government personnel.

(d) If an emergency or unanticipated event interrupts normal Government processes so that bids cannot be received at the Government office designated for receipt of bids by the exact time specified in the IFB and urgent Government requirements preclude amendment of the IFB, the time specified for receipt of bids will be deemed to be extended to the same time of day specified in the solicitation on the first work day on which normal Government processes resume.

(e) Bids may be withdrawn by written notice received at any time before the exact time set for receipt of bids. If the IFB authorizes facsimile bids, bids may be withdrawn via facsimile received at any time before the exact time set for receipt of bids, subject to the conditions specified in the provision at 52.214-31, Facsimile Bids. A bid may be withdrawn in person by a bidder or its authorized representative if, before the exact time set for receipt of bids, the identity of the person requesting withdrawal is established and the person signs a receipt for the bid.

(End of provision)

52.214-18 PREPARATION OF BIDS--CONSTRUCTION (APR 1984)

(a) Bids must be (1) submitted on the forms furnished by the Government or on copies of those forms, and (2) manually signed. The person signing a bid must initial each erasure or change appearing on any bid form.

(b) The bid form may require bidders to submit bid prices for one or more items on various bases, including--

(1) Lump sum bidding;

(2) Alternate prices;

(3) Units of construction; or

(4) Any combination of subparagraphs (1) through (3) above.

(c) If the solicitation requires bidding on all items, failure to do so will disqualify the bid. If bidding on all items is not required, bidders should insert the words "no bid" in the space provided for any item on which no price is submitted.

(d) Alternate bids will not be considered unless this solicitation authorizes their submission.

52.214-19 CONTRACT AWARD--SEALED BIDDING--CONSTRUCTION (AUG 1996)

(a) The Government will evaluate bids in response to this solicitation without discussions and will award a contract to the responsible bidder whose bid, conforming to the solicitation, will be most advantageous to the Government, considering only price and the price-related factors specified elsewhere in the solicitation.

(b) The Government may reject any or all bids, and waive informalities or minor irregularities in bids received.

(c) The Government may accept any item or combination of items, unless doing so is precluded by a restrictive limitation in the solicitation or the bid.

(d) The Government may reject a bid as nonresponsive if the prices bid are materially unbalanced between line items or subline items. A bid is materially unbalanced when it is based on prices significantly less than cost for some work and prices which are significantly overstated in relation to cost for other work, and if there is a reasonable doubt that the bid will result in the lowest overall cost to the Government even though it may be the low evaluated bid, or if it is so unbalanced as to be tantamount to allowing an advance payment.

52.214-34 SUBMISSION OF OFFERS IN THE ENGLISH LANGUAGE (APR 1991)

Offers submitted in response to this solicitation shall be in the English language. Offers received in other than English shall be rejected.

(End of provision)

52.214-35 SUBMISSION OF OFFERS IN U.S. CURRENCY (APR 1991)

Offers submitted in response to this solicitation shall be in terms of U.S. dollars. Offers received in other than U.S. dollars shall be rejected.

(End of provision)

52.214-5000 APPARENT CLERICAL MISTAKES (MAR 1995)—EFARS

(a) For the purpose of initial evaluations of bids, the following will be utilized in the resolving arithmetic discrepancies found on the face of bidding schedule as submitted by the bidder:

(1) Obviously misplaced decimal points will be corrected;

(2) Discrepancy between unit price and extended price, the unit price will govern;

(3) Apparent errors in extension of unit prices will be corrected;
(4) Apparent errors in addition of lump-sum and extended prices will be corrected.
(b) For the purpose of bid evaluation, the government will proceed on the assumption that the bidder intends his bid to be evaluated on basis of the unit prices, the totals arrived at by resolution of arithmetic discrepancies as provided above and the bid will be so reflected on the abstract of bids.
(c) These correction procedures shall not be used to resolve any ambiguity concerning which bid is low.

(End of statement)

52.216-1 TYPE OF CONTRACT (APR 1984)

The Government contemplates award of a firm, fixed-price contract resulting from this solicitation.

(End of clause)

52.225-10 NOTICE OF BUY AMERICAN ACT/BALANCE OF PAYMENTS PROGRAM REQUIREMENT--CONSTRUCTION MATERIALS (FEB 2000)

(a) Definitions. Construction material, domestic construction material, and foreign construction material, as used in this provision, are defined in the clause of this solicitation entitled “Buy American Act--Balance of Payments Program--Construction Materials” (Federal Acquisition Regulation (FAR) clause 52.225-9).

(b) Requests for determinations of inapplicability. An offeror requesting a determination regarding the inapplicability of the Buy American Act or Balance of Payments Program should submit the request to the Contracting Officer in time to allow a determination before submission of offers. The offeror shall include the information and applicable supporting data required by paragraphs (c) and (d) of the clause at FAR 52.225-9 in the request. If an offeror has not requested a determination regarding the inapplicability of the Buy American Act or Balance of Payments Program before submitting its offer, or has not received a response to a previous request, the offeror shall include the information and supporting data in the offer.

(c) Evaluation of offers. (1) The Government will evaluate an offer requesting exception to the requirements of the Buy American Act or Balance of Payments Program, based on claimed unreasonable cost of domestic construction material, by adding to the offered price the appropriate percentage of the cost of such foreign construction material, as specified in paragraph (b)(3)(i) of the clause at FAR 52.225-9.

(2) If evaluation results in a tie between an offeror that requested the substitution of foreign construction material based on unreasonable cost and an offeror that did not request an exception, the Contracting Officer will award to the offeror that did not request an exception based on unreasonable cost.

(d) Alternate offers.

(1) When an offer includes foreign construction material not listed by the Government in this solicitation in paragraph (b)(2) of the clause at FAR 52.225-9, the offeror also may submit an alternate offer based on use of equivalent domestic construction material.

(2) If an alternate offer is submitted, the offeror shall submit a separate Standard Form 1442 for the alternate offer, and a separate price comparison table prepared in accordance with paragraphs (c) and (d) of the clause at FAR 52.225-9 for the offer that is based on the use of any foreign construction material for which the Government has not yet determined an exception applies.

(3) If the Government determines that a particular exception requested in accordance with paragraph (c) of the clause at FAR 52.225-9 does not apply, the Government will evaluate only those offers based on use of the equivalent domestic construction material, and the offeror shall be required to furnish such domestic construction material. An offer based on use of the foreign construction material for which an exception was requested--

(i) Will be rejected as nonresponsive if this acquisition is conducted by sealed bidding; or

(ii) May be accepted if revised during negotiations.

(End of provision)

52.228-1 BID GUARANTEE (SEP 1996)

(a) Failure to furnish a bid guarantee in the proper form and amount, by the time set for opening of bids, may be cause for rejection of the bid.

(b) The bidder shall furnish a bid guarantee in the form of a firm commitment, e.g., bid bond supported by good and sufficient surety or sureties acceptable to the Government, postal money order, certified check, cashier's check, irrevocable letter of credit, or, under Treasury Department regulations, certain bonds or notes of the United States. The Contracting Officer will return bid guarantees, other than bid bonds, (1) to unsuccessful bidders as soon as practicable after the opening of bids, and (2) to the successful bidder upon execution of contractual documents and bonds (including any necessary coinsurance or reinsurance agreements), as required by the bid as accepted.-

(c) The amount of the bid guarantee shall be twenty percent of the bid price or $3,000,000.00, whichever is less.-

(d) If the successful bidder, upon acceptance of its bid by the Government within the period specified for acceptance, fails to execute all contractual documents or furnish executed bond(s) within 10 days after receipt of the forms by the bidder, the Contracting

Officer may terminate the contract for default.-

(e) In the event the contract is terminated for default, the bidder is liable for any cost of acquiring the work that exceeds the amount of its bid, and the bid guarantee is available to offset the difference.

52.233-2 SERVICE OF PROTEST (AUG 1996)

(a) Protests, as defined in section 33.101 of the Federal Acquisition Regulation, that are filed directly with an agency, and copies of any protests that are filed with the General Accounting Office (GAO), shall be served on the Contracting Officer (addressed as follows) by obtaining written and dated acknowledgment of receipt from

CHIEF, CONTRACTING DIVISION
ATTN: CEMVM-CT – ROOM 681
U.S. ARMY ENGINEER DISTRICT, MEMPHIS
167 NORTH MAIN STREET B202
MEMPHIS, TN 38103-1894

(b) The copy of any protest shall be received in the office designated above within one day of filing a protest with the GAO.

(End of provision)

52.252-1 SOLICITATION PROVISIONS INCORPORATED BY REFERENCE (FEB 1998)

This solicitation incorporates one or more solicitation provisions by reference, with the same force and effect as if they were given in full text. Upon request, the Contracting Officer will make their full text available. The offeror is cautioned that the listed provisions may include blocks that must be completed by the offeror and submitted with its quotation or offer. In lieu of submitting the full text of those provisions, the offeror may identify the provision by paragraph identifier and provide the appropriate information with its quotation or offer. Also, the full text of a solicitation provision may be accessed electronically at this/these address(es):

http://www.arnet.gov/far
http://farsite.hill.af.mil
http://www.dtic.mil/dfars

252.204-7001 COMMERCIAL AND GOVERNMENT ENTITY (CAGE) CODE REPORTING (AUG 1999)

(a) The offeror is requested to enter its CAGE code on its offer in the block with its name and address. The CAGE code entered must be for that name and address. Enter “CAGE” before the number.

(b) If the offeror does not have a CAGE code, it may ask the Contracting Officer to request one from the Defense Logistics Information Service (DLIS). The Contracting Officer will--

(1) Ask the Contractor to complete section B of a DD Form 2051, Request for Assignment of a Commercial and Government Entity (CAGE) Code;

(2) Complete section A and forward the form to DLIS; and

(3) Notify the Contractor of its assigned CAGE code.

(c) Do not delay submission of the offer pending receipt of a CAGE code.

(End of provision)

252.236-7008 CONTRACT PRICES - BIDDING SCHEDULES. (DEC 1991)

(a) The Government's payment for the items listed in the Bidding Schedule shall constitute full compensation to the Contractor for --

(1) Furnishing all plant, labor, equipment, appliances, and materials; and

(2) Performing all operations required to complete the work in conformity with the drawings and specifications.

(b) The Contractor shall include in the prices for the items listed in the Bidding Schedule all costs for work in the specifications, whether or not specifically listed in the Bidding Schedule.

END OF SECTION 00100

SECTION 00600
REPRESENTATIONS & CERTIFICATIONS
TABLE OF CONTENTS

52.0-4031 CORPORATE CERTIFICATION 1
52.203-2 CERTIFICATE OF INDEPENDENT PRICE DETERMINATION (APR 1985) 2
52.203-11 CERTIFICATION AND DISCLOSURE REGARDING PAYMENTS TO INFLUENCE CERTAIN FEDERAL TRANSACTIONS (APR 1991) 3
52.204-3 TAXPAYER IDENTIFICATION (OCT 1998) 3
52.204-5 WOMEN-OWNED BUSINESS (OTHER THAN SMALL BUSINESS) (MAY 1999) . 5
52.209-5 CERTIFICATION REGARDING DEBARMENT, SUSPENSION, PROPOSED DEBARMENT, AND OTHER RESPONSIBILITY MATTERS (JAN 2001) 6
52.219-1 SMALL BUSINESS PROGRAM REPRESENTATIONS (OCT 2000) ALTERNATE I (OCT 2000) & ALTERNATE II (OCT 2000) 7
52.219-2 EQUAL LOW BIDS. (OCT 1995) 10
52.219-19 SMALL BUSINESS CONCERN REPRESENTATION FOR THE SMALL BUSINESS COMPETITIVENESS DEMONSTRATION PROGRAM (OCT 2000) 11
52.222-22 PREVIOUS CONTRACTS AND COMPLIANCE REPORTS (FEB 1999) 11
52.223-13 CERTIFICATION OF TOXIC CHEMICAL RELEASE REPORTING (OCT 2000) ... 12
252.209-7001 DISCLOSURE OF OWNERSHIP OR CONTROL BY THE GOVERNMENT OF A TERRORIST COUNTRY (MAR 1998) 13
252.247-7022 REPRESENTATION OF EXTENT OF TRANSPORTATION BY SEA (AUG 1992) 14

SECTION 00600
REPRESENTATIONS & CERTIFICATIONS

CLAUSES INCORPORATED BY FULL TEXT:

52.0-4031 CORPORATE CERTIFICATION

IF A BIDDER IS A CORPORATION OR IF CORPORATION IS PARTICIPATING IN A JOINT VENTURE, PLEASE COMPLETE THE FOLLOWING CERTIFICATION:

I, _____, certify that I am secretary of the corporation named as Contractor herein; that _____ who signed this contract on behalf of the Contractor; was then _____ of said corporation; that said contract was duly signed for and on behalf of said corporation by authority of its governing body and is within the scope of its corporate powers.

(CORPORATE SEAL)

_____
(Secretary)

IF A CORPORATION IS PARTICIPATING AS A JOINT VENTURE, ITS SECRETARY MUST SUBMIT A CERTIFICATE STATING THE CORPORATION IS AUTHORIZED TO PARTICIPATE.

52.203-2 CERTIFICATE OF INDEPENDENT PRICE DETERMINATION (APR 1985)

(a) The offeror certifies that --

(1) The prices in this offer have been arrived at independently, without, for the purpose of restricting competition, any consultation, communication, or agreement with any other offeror or competitor relating to (i) those prices, (ii) the intention to submit an offer, or (iii) the methods of factors used to calculate the prices offered:

(2) The prices in this offer have not been and will not be knowingly disclosed by the offeror, directly or indirectly, to any other offeror or competitor before bid opening (in the case of a sealed bid solicitation) or contract award (in the case of a negotiated solicitation) unless otherwise required by law; and

(3) No attempt has been made or will be made by the offeror to induce any other concern to submit or not to submit an offer for the purpose of restricting competition.

(b) Each signature on the offer is considered to be a certification by the signatory that the signatory --

(1) Is the person in the offeror's organization responsible for determining the prices offered in this bid or proposal, and that the signatory has not participated and will not participate in any action contradictory to subparagraphs (a)(1) through (a)(3) above; or

(2) (i) Has been authorized, in writing, to act as an agent for the following principals in certifying that those principals have not participated, and will not participate in any action contrary to subparagraphs (a)(1) through (a)(3) above _____ (insert full name of person(s) in the offeror's organization responsible for determining the prices offered in this bid or proposal, and the title of his or her position in the offeror's organization);

(ii) As an authorized agent, does certify that the principals named in subdivision (b)(2)(i) above have not participated, and will not participate, in any action contrary to subparagraphs (a)(1) through (a)(3) above; and

(iii) As an agent, has not personally participated, and will not participate, in any action contrary to subparagraphs (a)(1) through (a)(3) above.

(c) If the offeror deletes or modifies subparagraph (a)(2) above, the offeror must furnish

with its offer a signed statement setting forth in detail the circumstances of the disclosure.

(End of clause)

52.203-11 CERTIFICATION AND DISCLOSURE REGARDING PAYMENTS TO INFLUENCE CERTAIN FEDERAL TRANSACTIONS (APR 1991)

(a) The definitions and prohibitions contained in the clause, at FAR 52.203-12, Limitation on Payments to Influence Certain Federal Transactions, included in this solicitation, are hereby incorporated by reference in paragraph (b) of this Certification.

(b) The offeror, by signing its offer, hereby certifies to the best of his or her knowledge and belief that on or after December 23, 1989,--

(1) No Federal appropriated funds have been paid or will be paid to any person for influencing or attempting to influence an officer or employee of any agency, a Member of Congress, an officer or employee of Congress, or an employee of a member of Congress on his or her behalf in connection with the awarding of any Federal contract, the making of any Federal grant, the making of any Federal loan, the entering into of any cooperative agreement, and the extension, continuation, renewal, amendment or modification of any Federal contract, grant, loan, or cooperative agreement;

(2) If any funds other than Federal appropriated funds (including profit or fee received under a covered Federal transaction) have been paid, or will be paid to any person for influencing or attempting to influence an officer or employee of any agency, a Member of Congress, an officer or employee of Congress or an employee of a Member of Congress on his or her behalf in connection with this solicitation, the offeror shall complete and submit, with its offer, OMB standard form LLL, Disclosure of Lobbying Activities, to the Contracting Officer; and

(3) He or she will include the language of this certification in all subcontract awards at any tier and require that all recipients of subcontract awards in excess of $100,000 shall certify and disclose accordingly.

(c) Submission of this certification and disclosure is a prerequisite for making or entering into this contract imposed by section 1352, title 31, United States Code. Any person who makes an expenditure prohibited under this provision, shall be subject to a civil penalty of not less than $10,000, and not more than $100,000, for each such failure.

(End of provision)

52.204-3 TAXPAYER IDENTIFICATION (OCT 1998)

(a) Definitions.

Common parent, as used in this provision, means that corporate entity that owns or controls an affiliated group of corporations that files its Federal income tax returns on a consolidated basis, and of which the offeror is a member.

Taxpayer Identification Number (TIN), as used in this provision, means the number required by the Internal Revenue Service (IRS) to be used by the offeror in reporting income tax and other returns. The TIN may be either a Social Security Number or an Employer Identification Number.

(b) All offerors must submit the information required in paragraphs (d) through (f) of this provision to comply with debt collection requirements of 31 U.S.C. 7701(c) and 3325(d), reporting requirements of 26 U.S.C. 6041, 6041A, and 6050M, and implementing regulations issued by the IRS. If the resulting contract is subject to the payment reporting requirements described in Federal Acquisition Regulation (FAR) 4.904, the failure or refusal by the offeror to furnish the information may result in a 31 percent reduction of payments otherwise due under the contract.

(c) The TIN may be used by the Government to collect and report on any delinquent amounts arising out of the offeror's relationship with the Government (31 U.S.C. 7701(c)(3)). If the resulting contract is subject to the payment reporting requirements described in FAR 4.904, the TIN provided hereunder may be matched with IRS records to verify the accuracy of the offeror's TIN.

(d) Taxpayer Identification Number (TIN).

___ TIN:.----------

___ TIN has been applied for.

___ TIN is not required because:

___ Offeror is a nonresident alien, foreign corporation, or foreign partnership that does not have income effectively connected with the conduct of a trade or business in the United States and does not have an office or place of business or a fiscal paying agent in the United States;

___ Offeror is an agency or instrumentality of a foreign government;

___ Offeror is an agency or instrumentality of the Federal Government.

(e) Type of organization.

___ Sole proprietorship;

___ Partnership;

___ Corporate entity (not tax-exempt);

___ Corporate entity (tax-exempt);

___ Government entity (Federal, State, or local);

___ Foreign government;

___ International organization per 26 CFR 1.6049-4;

___ Other----------

(f) Common parent.

___ Offeror is not owned or controlled by a common parent as defined in paragraph (a) of this provision.

___ Name and TIN of common parent:

Name----------

TIN----------

(End of provision)

52.204-5 WOMEN-OWNED BUSINESS (OTHER THAN SMALL BUSINESS) (MAY 1999)

(a) Definition. Women-owned business concern, as used in this provision, means a concern that is at least 51 percent owned by one or more women; or in the case of any publicly owned business, at least 51 percent of its stock is owned by one or more women; and whose management and daily business operations are controlled by one or more women.

(b) Representation. [Complete only if the offeror is a women-owned business concern and has not represented itself as a small business concern in paragraph (b)(1) of FAR 52.219-1, Small Business Program Representations, of this solicitation.] The offeror represents that it ( ) is a women-owned business concern.

(End of provision)

52.209-5 CERTIFICATION REGARDING DEBARMENT, SUSPENSION, PROPOSED DEBARMENT, AND OTHER RESPONSIBILITY MATTERS (JAN 2001)

(a)(1) The Offeror certifies, to the best of its knowledge and belief, that--

(i) The Offeror and/or any of its Principals--

(A) Are [ ] are not [ ] presently debarred, suspended, proposed for debarment, or declared ineligible for the award of contracts by any Federal agency;

(B) Have [ ] have not [ ], within the three-year period preceding this offer, been convicted of or had a civil judgment rendered against them for: commission of fraud or a criminal offense in connection with obtaining, attempting to obtain, or performing a public (Federal, state, or local) contract or subcontract; violation of Federal or state antitrust statutes relating to the submission of offers; or commission of embezzlement, theft, forgery, bribery, falsification or destruction of records, making false statements, tax evasion, or receiving stolen property;

(C) Are [ ] are not [ ] presently indicted for, or otherwise criminally or civilly charged by a governmental entity with, commission of any of the offenses enumerated in subdivision (a)(1)(i)(B) of this provision; and

(ii)(A) The offeror, aside from the offenses enumerated in paragraphs (a)(1)(i)(A), (B), and (C) of this provision, has [ ] has not [ ] within the past three years, relative to tax, labor and employment, environmental, antitrust, or consumer protection laws--

(1) Been convicted of a Federal or state felony (or has any Federal or state felony indictments currently pending against them); or

(2) Had a Federal court judgment in a civil case brought by the United States rendered against them; or

(3) Had an adverse decision by a Federal administrative law judge, board, or commission indicating a willful violation of law.

(B) If the offeror has responded affirmatively, the offeror shall provide additional information if requested by the Contracting Officer; and

(iii) The Offeror has [ ] has not [ ], within a three-year period preceding this offer, had one or more contracts terminated for default by any Federal agency.

(2) "Principals," for the purposes of this certification, means officers; directors; owners; partners; and, persons having primary management or supervisory responsibilities within a business entity (e.g., general manager; plant manager; head of a subsidiary, division, or business segment, and similar positions).

THIS CERTIFICATION CONCERNS A MATTER WITHIN THE JURISDICTION OF AN AGENCY OF THE UNITED STATES AND THE MAKING OF A FALSE, FICTITIOUS, OR FRAUDULENT CERTIFICATION MAY RENDER THE MAKER SUBJECT TO PROSECUTION UNDER SECTION 1001, TITLE 18, UNITED STATES CODE.

(b) The Offeror shall provide immediate written notice to the Contracting Officer if, at any time prior to contract award, the Offeror learns that its certification was erroneous when submitted or has become erroneous by reason of changed circumstances.

(c) A certification that any of the items in paragraph (a) of this provision exists will not necessarily result in withholding of an award under this solicitation. However, the certification will be considered in connection with a determination of the Offeror's responsibility. Failure of the Offeror to furnish a certification or provide such additional information as requested by the Contracting Officer may render the Offeror nonresponsible.

(d) Nothing contained in the foregoing shall be construed to require establishment of a system of records in order to render, in good faith, the certification required by paragraph (a) of this provision. The knowledge and information of an Offeror is not required to exceed that which is normally possessed by a prudent person in the ordinary course of business dealings.

(e) The certification in paragraph (a) of this provision is a material representation of fact upon which reliance was placed when making award. If it is later determined that the Offeror knowingly rendered an erroneous certification, in addition to other remedies available to the Government, the Contracting Officer may terminate the contract resulting from this solicitation for default.

(End of provision)

52.219-1 SMALL BUSINESS PROGRAM REPRESENTATIONS (OCT 2000) ALTERNATE I (OCT 2000) & ALTERNATE II (OCT 2000)

(a)(1) The North American Industry Classification System (NAICS) code for this acquisition is 234990.

(2) The small business size standard is $27,500,000.00.

(3) The small business size standard for a concern which submits an offer in its own name, other than on a construction or service contract, but which proposes to furnish a product which it did not itself manufacture, is 500 employees.

(b) Representations. (1) The offeror represents as part of its offer that it ( ) is, ( ) is not a small business concern.

(2) (Complete only if the offeror represented itself as a small business concern in paragraph (b)(1) of this provision.) The offeror represents, for general statistical purposes, that it ( ) is, ( ) is not a small disadvantaged business concern as defined in 13 CFR 124.1002.

(3) (Complete only if the offeror represented itself as a small business concern in paragraph (b)(1) of this provision.) The offeror represents as part of its offer that it ( ) is, ( ) is not a women-owned small business concern.

(4) (Complete only if the offeror represented itself as a small business concern in paragraph (b)(1) of this provision.) The offeror represents as part of its offer that it ( ) is, ( ) is not a veteran-owned small business concern.

(5) (Complete only if the offeror represented itself as a veteran-owned small business concern in paragraph (b)(4) of this provision.) The offeror represents as part of its offer that it ( ) is, ( ) is not a service-disabled veteran-owned small business concern.

(6) (Complete only if offeror represented itself as small business concern in paragraph (b)(1) of this provision). The offeror represents, as part of its offer, that--

(i) It ( ) is, ( ) is not a HUBZone small business concern listed, on the date of this representation, on the List of Qualified HUBZone Small Business Concerns maintained by the Small Business Administration, and no material change in ownership and control, principal office, or HUBZone employee percentage has occurred since it was certified by the Small Business Administration in accordance with 13 CFR Part 126; and

(ii) It ( ) is, ( ) is not a joint venture that complies with the requirements of 13 CFR Part 126, and the representation in paragraph (b)(6)(i) of this provision is accurate for the HUBZone small business concern or concerns that are participating in the joint venture. (The offeror shall enter the name or names of the HUBZone small business concern or concerns that are participating in the joint venture: _____.) Each HUBZone small business concern participating in the joint venture shall submit a separate signed copy of the HUBZone representation.

(7) (Complete if offeror represented itself as disadvantaged in paragraph (b)(2) of this provision.) The offeror shall check the category in which its ownership falls:

( ) Black American.

( ) Hispanic American.

( ) Native American (American Indians, Eskimos, Aleuts, or Native Hawaiians).

( ) Asian-Pacific American (persons with origins from Burma, Thailand, Malaysia, Indonesia, Singapore, Brunei, Japan, China, Taiwan, Laos, Cambodia (Kampuchea), Vietnam, Korea, The Philippines, U.S. Trust Territory of the Pacific Islands (Republic of Palau), Republic of the Marshall Islands, Federated States of Micronesia, the Commonwealth of the Northern Mariana Islands, Guam, Samoa, Macao, Hong Kong, Fiji, Tonga, Kiribati, Tuvalu, or Nauru).

( ) Subcontinent Asian (Asian-Indian) American (persons with origins from India, Pakistan, Bangladesh, Sri Lanka, Bhutan, the Maldives Islands, or Nepal).

(c) Definitions. As used in this provision--

Service-disabled veteran-owned small business concern--

(1) Means a small business concern--

(i) Not less than 51 percent of which is owned by one or more service-disabled veterans or, in the case of any publicly owned business, not less than 51 percent of the stock of which is owned by one or more service-disabled veterans; and

(ii) The management and daily business operations of which are controlled by one or more service-disabled veterans or, in the case of a veteran with permanent and severe disability, the spouse or permanent caregiver of such veteran.

(2) Service-disabled veteran means a veteran, as defined in 38 U.S.C. 101(2), with a disability that is service-connected, as defined in 38 U.S.C. 101(16).

"Small business concern," means a concern, including its affiliates, that is independently owned and operated, not dominant in the field of operation in which it is bidding on Government contracts, and qualified as a small business under the criteria in 13 CFR Part 121 and the size standard in paragraph (a) of this provision.

Veteran-owned small business concern means a small business concern--

(1) Not less than 51 percent of which is owned by one or more veterans (as defined at 38 U.S.C. 101(2)) or, in the case of any publicly owned business, not less than 51 percent of the stock of which is owned by one or more veterans; and

(2) The management and daily business operations of which are controlled by one or more veterans.

"Women-owned small business concern," means a small business concern --

(1) Which is at least 51 percent owned by one or more women or, in the case of any publicly owned business, at least 51 percent of the stock of which is owned by one or more women; and

(2) Whose management and daily business operations are controlled by one or more women.

(d) Notice.

(1) If this solicitation is for supplies and has been set aside, in whole or in part, for small business concerns, then the clause in this solicitation providing notice of the set-aside contains restrictions on the source of the end items to be furnished.

(2) Under 15 U.S.C. 645(d), any person who misrepresents a firm's status as a small, HUBZone small, small disadvantaged, or women-owned small business concern in order to obtain a contract to be awarded under the preference programs established pursuant to section 8(a), 8(d), 9, or 15 of the Small Business Act or any other provision of Federal law that specifically references section 8(d) for a definition of program eligibility, shall--

(i) Be punished by imposition of fine, imprisonment, or both;

(ii) Be subject to administrative remedies, including suspension and debarment; and

(iii) Be ineligible for participation in programs conducted under the authority of the Act.

(End of provision)

52.219-2 EQUAL LOW BIDS. (OCT 1995)

(a) This provision applies to small business concerns only.

(b) The bidder's status as a labor surplus area (LSA) concern may affect entitlement to award in case of tie bids. If the bidder wishes to be considered for this priority, the bidder must identify, in the following space, the LSA in which the costs to be incurred on account of manufacturing or production (by the bidder or the first-tier subcontractors) amount to more than 50 percent of the contract price.

_____

_____

(c) Failure to identify the labor surplus area as specified in paragraph (b) of this provision will preclude the bidder from receiving priority consideration. If the bidder is awarded a contract as a result of receiving priority consideration under this provision and would not have otherwise received award, the bidder shall perform the contract or cause the contract to be performed in accordance with the obligations of an LSA concern.

52.219-19 SMALL BUSINESS CONCERN REPRESENTATION FOR THE SMALL BUSINESS COMPETITIVENESS DEMONSTRATION PROGRAM (OCT 2000)

(a) Definition.

"Emerging small business" as used in this solicitation, means a small business concern whose size is no greater than 50 percent of the numerical size standard applicable to the North American Industry Classification System (NAICS) code assigned to a contracting opportunity.

(b) [Complete only if the Offeror has represented itself under the provision at 52.219-1 as a small business concern under the size standards of this solicitation.] The Offeror [ ] is, [ ] is not an emerging small business.

(c) (Complete only if the Offeror is a small business or an emerging small business, indicating its size range.)

Offeror's number of employees for the past 12 months (check this column if size standard stated in solicitation is expressed in terms of number of employees) or Offeror's average annual gross revenue for the last 3 fiscal years (check this column if size standard stated in solicitation is expressed in terms of annual receipts). (Check one of the following.)

No. of Employees	Avg. Annual Gross Revenues
____ 50 or fewer	____ $1 million or less
____ 51 - 100	____ $1,000,001 - $2 million
____ 101 - 250	____ $2,000,001 - $3.5 million
____ 251 - 500	____ $3,500,001 - $5 million
____ 501 - 750	____ $5,000,001 - $10 million
____ 751 - 1,000	____ $10,000,001 - $17 million
____ Over 1,000	____ Over $17 million

(End of provision)

52.222-22 PREVIOUS CONTRACTS AND COMPLIANCE REPORTS (FEB 1999)

The offeror represents that --

(a) [ ] It has, [ ] has not participated in a previous contract or subcontract subject to the Equal Opportunity clause of this solicitation;

(b) [ ] It has, [ ] has not, filed all required compliance reports; and

(c) Representations indicating submission of required compliance reports, signed by proposed subcontractors, will be obtained before subcontract awards.

(End of provision)

52.223-13 CERTIFICATION OF TOXIC CHEMICAL RELEASE REPORTING (OCT 2000)

(a) Submission of this certification is a prerequisite for making or entering into this contract imposed by Executive Order 12969, August 8, 1995.

(b) By signing this offer, the offeror certifies that--

(1) As the owner or operator of facilities that will be used in the performance of this contract that are subject to the filing and reporting requirements described in section 313 of the Emergency Planning and Community Right-to-Know Act of 1986 (EPCRA) (42 U.S.C. 11023) and section 6607 of the Pollution Prevention Act of 1990 (PPA) (42 U.S.C. 13106), the offeror will file and continue to file for such facilities for the life of the contract the Toxic Chemical Release Inventory Form (Form R) as described in sections 313(a) and (g) of EPCRA and section 6607 of PPA; or

(2) None of its owned or operated facilities to be used in the performance of this contract is subject to the Form R filing and reporting requirements because each such facility is exempt for at least one of the following reasons: (Check each block that is applicable.)

[ ] (i) The facility does not manufacture, process or otherwise use any toxic chemicals listed under section 313(c) of EPCRA, 42 U.S.C. 11023(c);

[ ] (ii) The facility does not have 10 or more full-time employees as specified in section 313.(b)(1)(A) of EPCRA 42 U.S.C. 11023(b)(1)(A);

[ ] (iii) The facility does not meet the reporting thresholds of toxic chemicals established under section 313(f) of EPCRA, 42 U.S.C. 11023(f) (including the alternate thresholds at 40 CFR 372.27, provided an appropriate certification form has been filed with EPA);

[ ] (iv) The facility does not fall within Standard Industrial Classification Code (SIC) major groups 20 through 39 or their corresponding North American Industry Classification System (NAICS) sectors 31 through 33; or

[ ] (v) The facility is not located within any State of the United States, the District of Columbia, the Commonwealth of Puerto Rico, Guam, American Samoa, the United States Virgin Islands, the Northern Mariana Islands, or any other territory or possession over which the United States has jurisdiction.

252.209-7001 DISCLOSURE OF OWNERSHIP OR CONTROL BY THE GOVERNMENT OF A TERRORIST COUNTRY (MAR 1998)

(a) "Definitions."

As used in this provision --

(1) "Government of a terrorist country" includes the state and the government of a terrorist country, as well as any political subdivision, agency, or instrumentality thereof.

(2) "Terrorist country" means a country determined by the Secretary of State, under section 6(j)(1)(A) of the Export Administration Act of 1979 (50 U.S.C. App. 2405(j)(i)(A)), to be a country the government of which has repeatedly provided support for such acts of international terrorism. As of the date of this provision, terrorist countries include: Cuba, Iran, Iraq, Libya, North Korea, Sudan, and Syria.

(3) "Significant interest" means --

(i) Ownership of or beneficial interest in 5 percent or more of the firm's or subsidiary's securities. Beneficial interest includes holding 5 percent or more of any class of the firm's securities in "nominee shares," "street names," or some other method of holding securities that does not disclose the beneficial owner;

(ii) Holding a management position in the firm, such as a director or officer;

(iii) Ability to control or influence the election, appointment, or tenure of directors or officers in the firm;

(iv) Ownership of 10 percent or more of the assets of a firm such as equipment, buildings, real estate, or other tangible assets of the firm; or

(v) Holding 50 percent or more of the indebtedness of a firm.

(b) "Prohibition on award."

In accordance with 10 U.S.C. 2327, no contract may be awarded to a firm or a subsidiary of a firm if the government of a terrorist country has a significant interest in the firm or subsidiary or, in the case of a subsidiary, the firm that owns the subsidiary, unless a waiver is granted by the Secretary of Defense.

(c) "Disclosure."

If the government of a terrorist country has a significant interest in the Offeror or a subsidiary of the Offeror, the Offeror shall disclosure such interest in an attachment to its offer. If the Offeror is a subsidiary, it shall also disclose any significant interest the government of a terrorist country has in any firm that owns or controls the subsidiary. The disclosure shall include --

(1) Identification of each government holding a significant interest; and

(2) A description of the significant interest held by each government.

(End of provision)

252.247-7022 REPRESENTATION OF EXTENT OF TRANSPORTATION BY SEA (AUG 1992)

(a) The Offeror shall indicate by checking the appropriate blank in paragraph (b) of this provision whether transportation of supplies by sea is anticipated under the resultant contract. The term supplies is defined in the Transportation of Supplies by Sea clause of this solicitation.

(b) Representation. The Offeror represents that it:

____ (1) Does anticipate that supplies will be transported by sea in the performance of any contract or subcontract resulting from this solicitation.

____ (2) Does not anticipate that supplies will be transported by sea in the performance of any contract or subcontract resulting from this solicitation.

(c) Any contract resulting from this solicitation will include the Transportation of Supplies by Sea clause. If the Offeror represents that it will not use ocean transportation, the resulting contract will also include the Defense FAR Supplement clause at 252.247-7024, Notification of Transportation of Supplies by Sea.

(End of provision)

END OF SECTION 00600

SECTION 00700
CONTRACT CLAUSES
TABLE OF CONTENTS

52.202-1 DEFINITIONS (OCT 1995) --ALTERNATE I (APR 1984) 1
52.203-3 GRATUITIES (APR 1984)..... 1
52.203-5 COVENANT AGAINST CONTINGENT FEES (APR 1984)..... 2
52.203-7 ANTI-KICKBACK PROCEDURES (JUL 1995) 3
52.203-8 CANCELLATION, RESCISSION, AND RECOVERY OF FUNDS FOR ILLEGAL OR IMPROPER ACTIVITY (JAN 1997) 4
52.203-10 PRICE OR FEE ADJUSTMENT FOR ILLEGAL OR IMPROPER ACTIVITY (JAN 1997)..... 5
52.203-12 LIMITATION ON PAYMENTS TO INFLUENCE CERTAIN FEDERAL TRANSACTIONS (JUN 1997)..... 6
52.204-4 PRINTING/COPYING DOUBLE-SIDED ON RECYCLED PAPER (AUG 2000)..... 12
52.209-6 PROTECTING THE GOVERNMENT'S INTEREST WHEN SUBCONTRACTING WITH CONTRACTORS DEBARRED, SUSPENDED, OR PROPOSED FOR DEBARMENT (JUL 1995) 13
52.211-18 VARIATION IN ESTIMATED QUANTITY (APR 1984)..... 14
52.214-26 AUDIT AND RECORDS--SEALED BIDDING (OCT 1997)..... 14
52.214-27 PRICE REDUCTION FOR DEFECTIVE COST OR PRICING DATA - MODIFICATIONS - SEALED BIDDING (OCT 1997) 15
52.214-28 SUBCONTRACTOR COST OR PRICING DATA - MODIFICATIONS - SEALED BIDDING (OCT 1997) 17
52.214-29 ORDER OF PRECEDENCE--SEALED BIDDING (JAN 1986)..... 18
52.219-8 UTILIZATION OF SMALL BUSINESS CONCERNS (OCT 2000) 18
52.222-3 CONVICT LABOR (AUG 1996) 20
52.222-4 CONTRACT WORK HOURS AND SAFETY STANDARDS ACT - OVERTIME COMPENSATION (SEP 2000) 21
52.222-6 DAVIS-BACON ACT (FEB 1995) 22
52.222-7 WITHHOLDING OF FUNDS (FEB 1988)..... 23
52.222-8 PAYROLLS AND BASIC RECORDS (FEB 1988) 24
52.222-9 APPRENTICES AND TRAINEES (FEB 1988) 25
52.222-10 COMPLIANCE WITH COPELAND ACT REQUIREMENTS (FEB 1988) 27
52.222-11 SUBCONTRACTS (LABOR STANDARDS (FEB 1988) 27
52.222-12 CONTRACT TERMINATION--DEBARMENT (FEB 1988) 27
52.222-13 COMPLIANCE WITH DAVIS-BACON AND RELATED ACT REGULATIONS (FEB 1988). 27
52.222-14 DISPUTES CONCERNING LABOR STANDARDS (FEB 1988)..... 28
52.222-15 CERTIFICATION OF ELIGIBILITY (FEB 1988) 28
52.222-21 PROHIBITION OF SEGREGATED FACILITIES (FEB 1999)..... 28
52.222-26 EQUAL OPPORTUNITY (FEB 1999) 29
52.222-27 AFFIRMATIVE ACTION COMPLIANCE REQUIREMENTS FOR CONSTRUCTION (FEB 1999)..... 30
52.222-35 AFFIRMATIVE ACTION FOR DISABLED VETERANS AND VETERANS OF THE VIETNAM ERA (APR 1998) 35
52.222-36 AFFIRMATIVE ACTION FOR WORKERS WITH DISABILITIES (JUN 1998)..... 38
52.222-37 EMPLOYMENT REPORTS ON DISABLED VETERANS AND VETERANS OF THE VIETNAM ERA (JAN 1999)..... 39
52.223-3 HAZARDOUS MATERIAL IDENTIFICATION AND MATERIAL SAFETY DATA (JAN 1997)..... 40
52.223-6 DRUG-FREE WORKPLACE (JAN 1997) 42
52.223-14 TOXIC CHEMICAL RELEASE REPORTING (OCT 2000) 44
52.225-5 TRADE AGREEMENTS (APR 2000) 45
52.225-9 BUY AMERICAN ACT--BALANCE OF PAYMENTS PROGRAM—CONSTRUCTION MATERIALS (FEB 2000) 47

52.225-13 RESTRICTIONS ON CERTAIN FOREIGN PURCHASES (JUL 2000) 50
52.225-15 SANCTIONED EUROPEAN UNION COUNTRY END PRODUCTS (FEB 2000) 51
52.227-1 AUTHORIZATION AND CONSENT (JUL 1995) 51
52.227-2 NOTICE AND ASSISTANCE REGARDING PATENT AND COPYRIGHT INFRINGEMENT (AUG 1996) 52
52.227-4 PATENT INDEMNITY--CONSTRUCTION CONTRACTS (APR 1984) 52
52.228-2 ADDITIONAL BOND SECURITY (OCT 1997) 53
52.228-11 PLEDGES OF ASSETS (FEB 1992) 53
52.228-12 PROSPECTIVE SUBCONTRACTOR REQUESTS FOR BONDS (OCT 1995) 54
52.228-14 IRREVOCABLE LETTER OF CREDIT (DEC 1999) 54
52.228-15 PERFORMANCE AND PAYMENT BONDS--CONSTRUCTION (JUL 2000)- 58
52.229-3 FEDERAL, STATE, AND LOCAL TAXES (JAN 1991) 59
52.229-5 TAXES--CONTRACTS PERFORMED IN U.S. POSSESSIONS OR PUERTO RICO (APR 1984) 60
52.232-5 PAYMENTS UNDER FIXED-PRICE CONSTRUCTION CONTRACTS (MAY 1997) 61
52.232-17 INTEREST (JUNE 1996) 64
52.232-23 ASSIGNMENT OF CLAIMS (JAN 1986) 64
52.232-27 PROMPT PAYMENT FOR CONSTRUCTION CONTRACTS (JUN 1997) 65
52.233-1 DISPUTES (DEC 1998) 75
52.233-3 PROTEST AFTER AWARD (AUG. 1996) 77
52.236-2 DIFFERING SITE CONDITIONS (APR 1984) 78
52.236-3 SITE INVESTIGATION AND CONDITIONS AFFECTING THE WORK (APR 1984) 79
52.236-5 MATERIAL AND WORKMANSHIP (APR 1984) 80
52.236-6 SUPERINTENDENCE BY THE CONTRACTOR (APR 1984) 80
52.236-7 PERMITS AND RESPONSIBILITIES (NOV 1991) 81
52.236-8 OTHER CONTRACTS (APR 1984) 81
52.236-9 PROTECTION OF EXISTING VEGETATION, STRUCTURES, EQUIPMENT, UTILITIES, AND IMPROVEMENTS (APR 1984) 81
52.236-10 OPERATIONS AND STORAGE AREAS (APR 1984) 82
52.236-11 USE AND POSSESSION PRIOR TO COMPLETION (APR 1984) 82
52.236-12 CLEANING UP (APR 1984) 83
52.236-13 ACCIDENT PREVENTION (NOV 1991) – ALTERNATE I (NOV 1991) 83
52.236-15 SCHEDULES FOR CONSTRUCTION CONTRACTS (APR 1984) 84
52.236-21 SPECIFICATIONS AND DRAWINGS FOR CONSTRUCTION (FEB 1997) 85
52.236-26 PRECONSTRUCTION CONFERENCE (FEB 1995) 86
52.242-13 BANKRUPTCY (JUL 1995) 86
52.242-14 SUSPENSION OF WORK (APR 1984) 87
52.243-4 CHANGES (AUG 1987) 87
52.244-6 SUBCONTRACTS FOR COMMERCIAL ITEMS AND COMMERCIAL COMPONENTS (OCT 1998) 88
52.245-2 GOVERNMENT PROPERTY (FIXED-PRICE CONTRACTS) (DEC 1989) 89
52.245-4 GOVERNMENT-FURNISHED PROPERTY (SHORT FORM) (APR 1984) 92
52.246-12 INSPECTION OF CONSTRUCTION (AUG 1996) 93
52.248-3 VALUE ENGINEERING--CONSTRUCTION (FEB 2000) - ALTERNATE I (APR 1984) 94
52.249-1 TERMINATION FOR CONVENIENCE OF THE GOVERNMENT (FIXED-PRICE) (SHORT FORM) (APR 1984) 98
52.249-2 TERMINATION FOR CONVENIENCE OF THE GOVERNMENT (FIXED-PRICE) (SEP 1996) - ALTERNATE I (SEP 1996) 98
52.249-10 DEFAULT (FIXED-PRICE CONSTRUCTION) (APR 1984) 102
52.252-2 CLAUSES INCORPORATED BY REFERENCE (FEB 1998) 103
52.252-4 ALTERATIONS IN CONTRACT (APR 1984) 103
52.252-6 AUTHORIZED DEVIATIONS IN CLAUSES (APR 1984) 103
52.253-1 COMPUTER GENERATED FORMS (JAN 1991) 104
252.201-7000 CONTRACTING OFFICER'S REPRESENTATIVE (DEC 1991) 104
252.203-7001 PROHIBITION ON PERSONS CONVICTED OF FRAUD OR OTHER DEFENSE-CONTRACT-RELATED FELONIES (MAR 1999) 104

252.204-7004 REQUIRED CENTRAL CONTRACTOR REGISTRATION (MAR 2000) 106
252.209-7004 SUBCONTRACTING WITH FIRMS THAT ARE OWNED OR CONTROLLED BY THE GOVERNMENT OF A TERRORIST COUNTRY (MAR 1998) 107
252.223-7001 HAZARD WARNING LABELS (DEC 1991) 107
252.223-7004 DRUG-FREE WORK FORCE (SEP 1988) 108
252.225-7031 SECONDARY ARAB BOYCOTT OF ISRAEL (JUN 1992) 110
252.227-7033 RIGHTS IN SHOP DRAWINGS (APR 1966) 110
252.231-7000 SUPPLEMENTAL COST PRINCIPLES (DEC 1991) 111
252.236-7000 MODIFICATION PROPOSALS - PRICE BREAKDOWN (DEC 1991) 111
252.236-7008 CONTRACT PRICES - BIDDING SCHEDULES (DEC 1991) 112
252.243-7001 PRICING OF CONTRACT MODIFICATIONS (DEC 1991) 112
252.247-7023 TRANSPORTATION OF SUPPLIES BY SEA (MAR 2000) 112

SECTION 00700
CONTRACT CLAUSES

CLAUSES INCORPORATED BY FULL TEXT:

52.202-1 DEFINITIONS (OCT 1995) --ALTERNATE I (APR 1984)

(a) "Head of the agency" (also called "agency head") or "Secretary" means the Secretary (or Attorney General, Administrator, Governor, Chairperson, or other chief official, as appropriate) of the agency, including any deputy or assistant chief official of the agency; and the term "authorized representative" means any person, persons, or board (other than the Contracting Officer) authorized to act for the head of the agency or Secretary.

(b) "Commercial component" means any component that is a commercial item.

(c) "Component" means any item supplied to the Federal Government as part of an end item or of another component.

(d) "Nondevelopmental item" means--

(1) Any previously developed item of supply used exclusively for governmental purposes by a Federal agency, a State or local government, or a foreign government with which the United States has a mutual defense cooperation agreement;

(2) Any item described in paragraph (e)(1) of this definition that requires only minor modification or modifications of a type customarily available in the commercial marketplace in order to meet the requirements of the procuring department or agency; or
(3) Any item of supply being produced that does not meet the requirements of paragraph (e)(1) or (e)(2) solely because the item is not yet in use.

(e) "Contracting Officer" means a person with the authority to enter into, administer, and/or terminate contracts and make related determinations and findings. The term includes certain authorized representatives of the Contracting Officer acting within the limits of their authority as delegated by the Contracting Officer.

(f) Except as otherwise provided in this contract, the term "subcontracts" includes, but is not limited to, purchase orders and changes and modifications to purchase orders under this contract.

52.203-3 GRATUITIES (APR 1984)

(a) The right of the Contractor to proceed may be terminated by written notice if, after notice and hearing, the agency head or a designee determines that the Contractor, its agent, or another

representative--

(1) Offered or gave a gratuity (e.g., an entertainment or gift) to an officer, official, or employee of the Government; and

(2) Intended, by the gratuity, to obtain a contract or favorable treatment under a contract.

(b) The facts supporting this determination may be reviewed by any court having lawful jurisdiction.

(c) If this contract is terminated under paragraph (a) of this clause, the Government is entitled--

(1) To pursue the same remedies as in a breach of the contract; and

(2) In addition to any other damages provided by law, to exemplary damages of not less than 3 nor more than 10 times the cost incurred by the Contractor in giving gratuities to the person concerned, as determined by the agency head or a designee. (This subparagraph (c)(2) is applicable only if this contract uses money appropriated to the Department of Defense.)

(d) The rights and remedies of the Government provided in this clause shall not be exclusive and are in addition to any other rights and remedies provided by law or under this contract.

(End of clause)

52.203-5 COVENANT AGAINST CONTINGENT FEES (APR 1984)

(a) The Contractor warrants that no person or agency has been employed or retained to solicit or obtain this contract upon an agreement or understanding for a contingent fee, except a bona fide employee or agency. For breach or violation of this warranty, the Government shall have the right to annul this contract without liability or, in its discretion, to deduct from the contract price or consideration, or otherwise recover, the full amount of the contingent fee.

(b) "Bona fide agency," as used in this clause, means an established commercial or selling agency, maintained by a contractor for the purpose of securing business, that neither exerts nor proposes to exert improper influence to solicit or obtain Government contracts nor holds itself out as being able to obtain any Government contract or contracts through improper influence.

"Bona fide employee," as used in this clause, means a person, employed by a contractor and subject to the contractor's supervision and control as to time, place, and manner of performance, who neither exerts nor proposes to exert improper influence to solicit or obtain Government contracts nor holds out as being able to obtain any Government contract or contracts through improper influence.

"Contingent fee," as used in this clause, means any commission, percentage, brokerage, or other fee that is contingent upon the success that a person or concern has in securing a Government

contract.

"Improper influence," as used in this clause, means any influence that induces or tends to induce a Government employee or officer to give consideration or to act regarding a Government contract on any basis other than the merits of the matter.

(End of clause)

52.203-7 ANTI-KICKBACK PROCEDURES. (JUL 1995)

(a) Definitions.

"Kickback," as used in this clause, means any money, fee, commission, credit, gift, gratuity, thing of value, or compensation of any kind which is provided, directly or indirectly, to any prime Contractor, prime Contractor employee, subcontractor, or subcontractor employee for the purpose of improperly obtaining or rewarding favorable treatment in connection with a prime contract or in connection with a subcontract relating to a prime contract.

"Person," as used in this clause, means a corporation, partnership, business association of any kind, trust, joint-stock company, or individual.

"Prime contract," as used in this clause, means a contract or contractual action entered into by the United States for the purpose of obtaining supplies, materials, equipment, or services of any kind.

"Prime Contractor," as used in this clause, means a person who has entered into a prime contract with the United States.

"Prime Contractor employee," as used in this clause, means any officer, partner, employee, or agent of a prime Contractor.

"Subcontract," as used in this clause, means a contract or contractual action entered into by a prime Contractor or subcontractor for the purpose of obtaining supplies, materials, equipment, or services of any kind under a prime contract.

"Subcontractor," as used in this clause, (1) means any person, other than the prime Contractor, who offers to furnish or furnishes any supplies, materials, equipment, or services of any kind under a prime contract or a subcontract entered into in connection with such prime contract, and (2) includes any person who offers to furnish or furnishes general supplies to the prime Contractor or a higher tier subcontractor.

"Subcontractor employee," as used in this clause, means any officer, partner, employee, or agent of a subcontractor.

(b) The Anti-Kickback Act of 1986 (41 U.S.C. 51-58) (the Act), prohibits any person from -

(1) Providing or attempting to provide or offering to provide any kickback;

(2) Soliciting, accepting, or attempting to accept any kickback; or

(3) Including, directly or indirectly, the amount of any kickback in the contract price charged by a prime Contractor to the United States or in the contract price charged by a subcontractor to a prime Contractor or higher tier subcontractor.

(c)(1) The Contractor shall have in place and follow reasonable procedures designed to prevent and detect possible violations described in paragraph (b) of this clause in its own operations and direct business relationships.

(2) When the Contractor has reasonable grounds to believe that a violation described in paragraph (b) of this clause may have occurred, the Contractor shall promptly report in writing the possible violation. Such reports shall be made to the inspector general of the contracting agency, the head of the contracting agency if the agency does not have an inspector general, or the Department of Justice.

(3) The Contractor shall cooperate fully with any Federal agency investigating a possible violation described in paragraph (b) of this clause.

(4) The Contracting Officer may (i) offset the amount of the kickback against any monies owed by the United States under the prime contract and/or (ii) direct that the Prime Contractor withhold, from sums owed a subcontractor under the prime contract, the amount of any kickback. The Contracting Officer may order the monies withheld under subdivision (c)(4)(ii) of this clause be paid over to the Government unless the Government has already offset those monies under subdivision (c)(4)(i) of this clause. In either case, the Prime Contractor shall notify the Contracting Officer when the monies are withheld.

(5) The Contractor agrees to incorporate the substance of this clause, including this subparagraph (c)(5) but excepting subparagraph (c)(1), in all subcontracts under this contract which exceed $100,000.

52.203-8 CANCELLATION, RESCISSION, AND RECOVERY OF FUNDS FOR ILLEGAL OR IMPROPER ACTIVITY (JAN 1997)

(a) If the Government receives information that a contractor or a person has engaged in conduct constituting a violation of subsection (a), (b), (c), or (d) of Section 27 of the Office of Federal Procurement Policy Act (41 U.S.C. 423) (the Act), as amended by section 4304 of the 1996 National Defense Authorization Act for Fiscal Year 1996 (Pub. L. 104-106), the Government may--

(1) Cancel the solicitation, if the contract has not yet been awarded or issued; or

(2) Rescind the contract with respect to which--

(i) The Contractor or someone acting for the Contractor has been convicted for an offense where the conduct constitutes a violation of subsection 27 (a) or (b) of the Act for the purpose of either--

(A) Exchanging the information covered by such subsections for anything of value; or

(B) Obtaining or giving anyone a competitive advantage in the award of a Federal agency procurement contract; or

(ii) The head of the contracting activity has determined, based upon a preponderance of the evidence, that the Contractor or someone acting for the Contractor has engaged in conduct constituting an offense punishable under subsections 27(e)(1) of the Act.

(b) If the Government rescinds the contract under paragraph (a) of this clause, the Government is entitled to recover, in addition to any penalty prescribed by law, the amount expended under the contract.

(c) The rights and remedies of the Government specified herein are not exclusive, and are in addition to any other rights and remedies provided by law, regulation, or under this contract.

52.203-10 PRICE OR FEE ADJUSTMENT FOR ILLEGAL OR IMPROPER ACTIVITY (JAN 1997)

(a) The Government, at its election, may reduce the price of a fixed-price type contract and the total cost and fee under a cost-type contract by the amount of profit or fee determined as set forth in paragraph (b) of this clause if the head of the contracting activity or designee determines that there was a violation of subsection 27 (a), (b), or (c) of the Office of Federal Procurement Policy Act, as amended (41 U.S.C. 423), as implemented in section 3.104 of the Federal Acquisition Regulation.

(b) The price or fee reduction referred to in paragraph (a) of this clause shall be--

(1) For cost-plus-fixed-fee contracts, the amount of the fee specified in the contract at the time of award;

(2) For cost-plus-incentive-fee contracts, the target fee specified in the contract at the time of award, notwithstanding any minimum fee or "fee floor" specified in the contract;

(3) For cost-plus-award-fee contracts--

(i) The base fee established in the contract at the time of contract award;

(ii) If no base fee is specified in the contract, 30 percent of the amount of each award fee

otherwise payable to the Contractor for each award fee evaluation period or at each award fee determination point.

(4) For fixed-price-incentive contracts, the Government may--

(i) Reduce the contract target price and contract target profit both by an amount equal to the initial target profit specified in the contract at the time of contract award; or

(ii) If an immediate adjustment to the contract target price and contract target profit would have a significant adverse impact on the incentive price revision relationship under the contract, or adversely affect the contract financing provisions, the Contracting Officer may defer such adjustment until establishment of the total final price of the contract. The total final price established in accordance with the incentive price revision provisions of the contract shall be reduced by an amount equal to the initial target profit specified in the contract at the time of contract award and such reduced price shall be the total final contract price.

(5) For firm-fixed-price contracts, by 10 percent of the initial contract price or a profit amount determined by the Contracting Officer from records or documents in existence prior to the date of the contract award.

(c) The Government may, at its election, reduce a prime contractor's price or fee in accordance with the procedures of paragraph (b) of this clause for violations of the Act by its subcontractors by an amount not to exceed the amount of profit or fee reflected in the subcontract at the time the subcontract was first definitively priced.

(d) In addition to the remedies in paragraphs (a) and (c) of this clause, the Government may terminate this contract for default. The rights and remedies of the Government specified herein are not exclusive, and are in addition to any other rights and remedies provided by law or under this contract.

(End of clause)

52.203-12 LIMITATION ON PAYMENTS TO INFLUENCE CERTAIN FEDERAL TRANSACTIONS (JUN 1997)

(a) Definitions.

"Agency," as used in this clause, means executive agency as defined in 2.101.

"Covered Federal action," as used in this clause, means any of the following Federal actions:

(1) The awarding of any Federal contract.

(2) The making of any Federal grant.

(3) The making of any Federal loan.

(4) The entering into of any cooperative agreement.

(5) The extension, continuation, renewal, amendment, or modification of any Federal contract, grant, loan, or cooperative agreement.

"Indian tribe" and "tribal organization," as used in this clause, have the meaning provided in section 4 of the Indian Self-Determination and Education Assistance Act (25 U.S.C. 450B) and include Alaskan Natives.

"Influencing or attempting to influence," as used in this clause, means making, with the intent to influence, any communication to or appearance before an officer or employee of any agency, a Member of Congress, an officer or employee of Congress, or an employee of a Member of Congress in connection with any covered Federal action.

"Local government," as used in this clause, means a unit of government in a State and, if chartered, established, or otherwise recognized by a State for the performance of a governmental duty, including a local public authority, a special district, an intrastate district, a council of governments, a sponsor group representative organization, and any other instrumentality of a local government.

"Officer or employee of an agency," as used in this clause, includes the following individuals who are employed by an agency:

(1) An individual who is appointed to a position in the Government under title 5, United States Code, including a position under a temporary appointment.

(2) A member of the uniformed services, as defined in subsection 101(3), title 37, United States Code.

(3) A special Government employee, as defined in section 202, title 18, United States Code.

(4) An individual who is a member of a Federal advisory committee, as defined by the Federal Advisory Committee Act, title 5, United States Code, appendix 2.

"Person," as used in this clause, means an individual, corporation, company, association, authority, firm, partnership, society, State, and local government, regardless of whether such entity is operated for profit, or not for profit. This term excludes an Indian tribe, tribal organization, or any other Indian organization with respect to expenditures specifically permitted by other Federal law.

"Reasonable compensation," as used in this clause, means, with respect to a regularly employed officer or employee of any person, compensation that is consistent with the normal compensation for such officer or employee for work that is not furnished to, not funded by, or not furnished in cooperation with the Federal Government.

"Reasonable payment," as used in this clause, means, with respect to professional and other technical services, a payment in an amount that is consistent with the amount normally paid for such services in the private sector.

"Recipient," as used in this clause, includes the Contractor and all subcontractors. This term excludes an Indian tribe, tribal organization, or any other Indian organization with respect to expenditures specifically permitted by other Federal law.

"Regularly employed," as used in this clause, means, with respect to an officer or employee of a person requesting or receiving a Federal contract, an officer or employee who is employed by such person for at least 130 working days within 1 year immediately preceding the date of the submission that initiates agency consideration of such person for receipt of such contract. An officer or employee who is employed by such person for less than 130 working days within 1 year immediately preceding the date of the submission that initiates agency consideration of such person shall be considered to be regularly employed as soon as he or she is employed by such person for 130 working days.

"State," as used in this clause, means a State of the United States, the District of Columbia, the Commonwealth of Puerto Rico, a territory or possession of the United States, an agency or instrumentality of a State, and multi-State, regional, or interstate entity having governmental duties and powers.

(b) Prohibitions.

(1) Section 1352 of title 31, United States Code, among other things, prohibits a recipient of a Federal contract, grant, loan, or cooperative agreement from using appropriated funds to pay any person for influencing or attempting to influence an officer or employee of any agency, a Member of Congress, an officer or employee of Congress, or an employee of a Member of Congress in connection with any of the following covered Federal actions: the awarding of any Federal contract; the making of any Federal grant; the making of any Federal loan; the entering into of any cooperative agreement; or the modification of any Federal contract, grant, loan, or cooperative agreement.

(2) The Act also requires Contractors to furnish a disclosure if any funds other than Federal appropriated funds (including profit or fee received under a covered Federal transaction) have been paid, or will be paid, to any person for influencing or attempting to influence an officer or employee of any agency, a Member of Congress, an officer or employee of Congress, or an employee of a Member of Congress in connection with a Federal contract, grant, loan, or cooperative agreement.

(3) The prohibitions of the Act do not apply under the following conditions:

(i) Agency and legislative liaison by own employees.

(A) The prohibition on the use of appropriated funds, in subparagraph (b)(1) of this clause, does not apply in the case of a payment of reasonable compensation made to an officer or employee of a person requesting or receiving a covered Federal action if the payment is for agency and legislative liaison activities not directly related to a covered Federal action.

(B) For purposes of subdivision (b)(3)(i)(A) of this clause, providing any information specifically requested by an agency or Congress is permitted at any time.

(C) The following agency and legislative liaison activities are permitted at any time where they are not related to a specific solicitation for any covered Federal action:

(1) Discussing with an agency the qualities and characteristics (including individual demonstrations) of the person's products or services, conditions or terms of sale, and service capabilities.

(2) Technical discussions and other activities regarding the application or adaptation of the person's products or services for an agency's use.

(D) The following agency and legislative liaison activities are permitted where they are prior to formal solicitation of any covered Federal action--

(1) Providing any information not specifically requested but necessary for an agency to make an informed decision about initiation of a covered Federal action;

(2) Technical discussions regarding the preparation of an unsolicited proposal prior to its official submission; and

(3) Capability presentations by persons seeking awards from an agency pursuant to the provisions of the Small Business Act, as amended by Pub. L. 95-507, and subsequent amendments.

(E) Only those services expressly authorized by subdivision (b)(3)(i)(A) of this clause are permitted under this clause.

(ii) Professional and technical services.

(A) The prohibition on the use of appropriated funds, in subparagraph (b)(1) of this clause, does not apply in the case of--

(1) A payment of reasonable compensation made to an officer or employee of a person requesting or receiving a covered Federal action or an extension, continuation, renewal, amendment, or modification of a covered Federal action, if payment is for professional or technical services rendered directly in the preparation, submission, or negotiation of any bid, proposal, or application for that Federal action or for meeting requirements imposed by or pursuant to law as a condition for receiving that Federal action.

(2) Any reasonable payment to a person, other than an officer or employee of a person requesting or receiving a covered Federal action or an extension, continuation, renewal, amendment, or modification of a covered Federal action if the payment is for professional or technical services rendered directly in the preparation, submission, or negotiation of any bid, proposal, or application for that Federal action or for meeting requirements imposed by or pursuant to law as a condition for receiving that Federal action. Persons other than officers or employees of a person requesting or receiving a covered Federal action include consultants and trade associations.

(B) For purposes of subdivision (b)(3)(ii)(A) of this clause, "professional and technical services" shall be limited to advice and analysis directly applying any professional or technical discipline. For example, drafting of a legal document accompanying a bid or proposal by a lawyer is allowable. Similarly, technical advice provided by an engineer on the performance or operational capability of a piece of equipment rendered directly in the negotiation of a contract is allowable. However, communications with the intent to influence made by a professional (such as a licensed lawyer) or a technical person (such as a licensed accountant) are not allowable under this section unless they provide advice and analysis directly applying their professional or technical expertise and unless the advice or analysis is rendered directly and solely in the preparation, submission or negotiation of a covered Federal action. Thus, for example, communications with the intent to influence made by a lawyer that do not provide legal advice or analysis directly and solely related to the legal aspects of his or her client's proposal, but generally advocate one proposal over another are not allowable under this section because the lawyer is not providing professional legal services. Similarly, communications with the intent to influence made by an engineer providing an engineering analysis prior to the preparation or submission of a bid or proposal are not allowable under this section since the engineer is providing technical services but not directly in the preparation, submission or negotiation of a covered Federal action.

(C) Requirements imposed by or pursuant to law as a condition for receiving a covered Federal award include those required by law or regulation and any other requirements in the actual award documents.

(D) Only those services expressly authorized by subdivisions (b)(3)(ii)(A)(1) and (2) of this clause are permitted under this clause.

(E) The reporting requirements of FAR 3.803(a) shall not apply with respect to payments of reasonable compensation made to regularly employed officers or employees of a person.

(c) Disclosure.

(1) The Contractor who requests or receives from an agency a Federal contract shall file with that agency a disclosure form, OMB standard form LLL, Disclosure of Lobbying Activities, if such person has made or has agreed to make any payment using nonappropriated funds (to include profits from any covered Federal action), which would be prohibited under subparagraph (b)(1) of this clause, if paid for with appropriated funds.

(2) The Contractor shall file a disclosure form at the end of each calendar quarter in which there occurs any event that materially affects the accuracy of the information contained in any disclosure form previously filed by such person under subparagraph (c)(1) of this clause. An event that materially affects the accuracy of the information reported includes--

(i) A cumulative increase of $25,000 or more in the amount paid or expected to be paid for influencing or attempting to influence a covered Federal action; or

(ii) A change in the person(s) or individual(s) influencing or attempting to influence a covered Federal action; or

(iii) A change in the officer(s), employee(s), or Member(s) contacted to influence or attempt to influence a covered Federal action.

(3) The Contractor shall require the submittal of a certification, and if required, a disclosure form by any person who requests or receives any subcontract exceeding $100,000 under the Federal contract.

(4) All subcontractor disclosure forms (but not certifications) shall be forwarded from tier to tier until received by the prime Contractor. The prime Contractor shall submit all disclosures to the Contracting Officer at the end of the calendar quarter in which the disclosure form is submitted by the subcontractor. Each subcontractor certification shall be retained in the subcontract file of the awarding Contractor.

(d) Agreement. The Contractor agrees not to make any payment prohibited by this clause.

(e) Penalties.

(1) Any person who makes an expenditure prohibited under paragraph (a) of this clause or who fails to file or amend the disclosure form to be filed or amended by paragraph (b) of this clause shall be subject to civil penalties as provided for by 31 U.S.C. 1352. An imposition of a civil penalty does not prevent the Government from seeking any other remedy that may be applicable.

(2) Contractors may rely without liability on the representation made by their subcontractors in the certification and disclosure form.

(f) Cost allowability. Nothing in this clause makes allowable or reasonable any costs which would otherwise be unallowable or unreasonable. Conversely, costs made specifically unallowable by the requirements in this clause will not be made allowable under any other provision.

(End of clause)

52.204-4 PRINTING/COPYING DOUBLE-SIDED ON RECYCLED PAPER (AUG 2000)

(a) Definitions. As used in this clause--

Postconsumer material means a material or finished product that has served its intended use and has been discarded for disposal or recovery, having completed its life as a consumer item. Postconsumer material is a part of the broader category of “recovered material.” For paper and paper products, postconsumer material means “postconsumer fiber” defined by the U.S. Environmental Protection Agency (EPA) as--

(1) Paper, paperboard, and fibrous materials from retail stores, office buildings, homes, and so forth, after they have passed through their end-usage as a consumer item, including: used corrugated boxes; old newspapers; old magazines; mixed waste paper; tabulating cards; and used cordage; or

(2) All paper, paperboard, and fibrous materials that enter and are collected from municipal solid waste; but not

(3) Fiber derived from printers' over-runs, converters' scrap, and over-issue publications.

Printed or copied double-sided means printing or reproducing a document so that information is on both sides of a sheet of paper.

Recovered material, for paper and paper products, is defined by EPA in its Comprehensive Procurement Guideline as “recovered fiber” and means the following materials:

(1) Postconsumer fiber; and

(2) Manufacturing wastes such as--

(i) Dry paper and paperboard waste generated after completion of the papermaking process (that is, those manufacturing operations up to and including the cutting and trimming of the paper machine reel into smaller rolls or rough sheets) including: envelope cuttings, bindery trimmings, and other paper and paperboard waste resulting from printing, cutting, forming, and other converting operations; bag, box, and carton manufacturing wastes; and butt rolls, mill wrappers, and rejected unused stock; and

(ii) Repulped finished paper and paperboard from obsolete inventories of paper and paperboard manufacturers, merchants, wholesalers, dealers, printers, converters, or others.

(b) In accordance with Section 101 of Executive Order 13101 of September 14, 1998, Greening the Government through Waste Prevention, Recycling, and Federal Acquisition, the Contractor is encouraged to submit paper documents, such as offers, letters, or reports, that are printed or

copied double-sided on recycled paper that meet minimum content standards specified in Section 505 of Executive Order 13101, when not using electronic commerce methods to submit information or data to the Government.

(c) If the Contractor cannot purchase high-speed copier paper, offset paper, forms bond, computer printout paper, carbonless paper, file folders, white wove envelopes, writing and office paper, book paper, cotton fiber paper, and cover stock meeting the 30 percent postconsumer material standard for use in submitting paper documents to the Government, it should use paper containing no less than 20 percent postconsumer material. This lesser standard should be used only when paper meeting the 30 percent postconsumer material standard is not obtainable at a reasonable price or does not meet reasonable performance standards.

(End of clause)

52.209-6 PROTECTING THE GOVERNMENT'S INTEREST WHEN SUBCONTRACTING WITH CONTRACTORS DEBARRED, SUSPENDED, OR PROPOSED FOR DEBARMENT (JUL 1995)

(a) The Government suspends or debars Contractors to protect the Government's interests. The Contractor shall not enter into any subcontract in excess of the $25,000 with a Contractor that is debarred, suspended, or proposed for debarment unless there is a compelling reason to do so.

(b) The Contractor shall require each proposed first-tier subcontractor, whose subcontract will exceed $25,000, to disclose to the Contractor, in writing, whether as of the time of award of the subcontract, the subcontractor, or its principles, is or is not debarred, suspended, or proposed for debarment by the Federal Government.

(c) A corporate officer or a designee of the Contractor shall notify the Contracting Officer, in writing, before entering into a subcontract with a party that is debarred, suspended, or proposed for debarment (see FAR 9.404 for information on the List of Parties Excluded from Federal Procurement and Nonprocurement Programs). The notice must include the following:

(1) The name of the subcontractor.

(2) The Contractor's knowledge of the reasons for the subcontractor being on the List of Parties Excluded from Federal Procurement and Nonprocurement Programs.

(3) The compelling reason(s) for doing business with the subcontractor notwithstanding its inclusion on the List of Parties Excluded from Federal Procurement and Nonprocurement Programs.

(4) The systems and procedures the Contractor has established to ensure that it is fully protecting the Government's interests when dealing with such subcontractor in view of the specific basis for the party's debarment, suspension, or proposed debarment.

(End of clause)

52.211-18 VARIATION IN ESTIMATED QUANTITY (APR 1984)

If the quantity of a unit-priced item in this contract is an estimated quantity and the actual quantity of the unit-priced item varies more than 15 percent above or below the estimated quantity, an equitable adjustment in the contract price shall be made upon demand of either party. The equitable adjustment shall be based upon any increase or decrease in costs due solely to the variation above 115 percent or below 85 percent of the estimated quantity. If the quantity variation is such as to cause an increase in the time necessary for completion, the Contractor may request, in writing, an extension of time, to be received by the Contracting Officer within 10 days from the beginning of the delay, or within such further period as may be granted by the Contracting Officer before the date of final settlement of the contract. Upon the receipt of a written request for an extension, the Contracting Officer shall ascertain the facts and make an adjustment for extending the completion date as, in the judgement of the Contracting Officer, is justified.

52.214-26 AUDIT AND RECORDS--SEALED BIDDING (OCT 1997)

(a) As used in this clause, records includes books, documents, accounting procedures and practices, and other data, regardless of type and regardless of whether such items are in written form, in the form of computer data, or in any other form.

(b) Cost or pricing data. If the Contractor has been required to submit cost or pricing data in connection with the pricing of any modification to this contract, the Contracting Officer, or an authorized representative of the Contracting Officer, in order to evaluate the accuracy, completeness, and currency of the cost or pricing data, shall have the right to examine and audit all of the Contractor's records, including computations and projections, related to--

(1) The proposal for the modification;

(2) The discussions conducted on the proposal(s), including those related to negotiating;

(3) Pricing of the modification; or

(4) Performance of the modification.

(c) Comptroller General. In the case of pricing any modification, the Comptroller General of the United States, or an authorized representative, shall have the same rights as specified in paragraph (b) of this clause.

(d) Availability. The Contractor shall make available at its office at all reasonable times the materials described in reproduction, until 3 years after final payment under this contract, or for

any other period specified in Subpart 4.7 of the Federal Acquisition Regulation (FAR). FAR Subpart 4.7, Contractor Records Retention, in effect on the data of this contract, is incorporated by reference in its entirety and made a part of this contract.

(1) If this contract is completely or partially terminated, the records relating to the work terminated shall be made available for 3 years after any resulting final termination settlement.

(2) Records pertaining to appeals under the Disputes clause or to litigation or the settlement of claims arising under or relating to the performance of this contract shall be made available until disposition of such appeals, litigation, or claims.

(e) The Contractor shall insert a clause containing all the provisions of this clause, including this paragraph (e), in all subcontracts expected to exceed the threshold in FAR 15.403-4(a)(1) for submission of cost or pricing data.

52.214-27 PRICE REDUCTION FOR DEFECTIVE COST OR PRICING DATA - MODIFICATIONS - SEALED BIDDING (OCT 1997)

(a) This clause shall become operative only for any modification to this contract involving aggregate increases and/or decreases in costs, plus applicable profits, expected to exceed the threshold for the submission of cost or pricing data at FAR 15.403-4(a)(1), except that this clause does not apply to a modification if an exception under FAR 15.403-1(b) applies.

(1) Based on adequate price competition;

(2) Based on established catalog or market prices of commercial items sold in substantial quantities to the general public; or

(3) Set by law or regulation.

(b) If any price, including profit, negotiated in connection with any modification under this clause, was increased by any significant amount because

(1) the Contractor or a subcontractor furnished cost or pricing data that were not complete, accurate, and current as certified in its Certificate of Current Cost or Pricing Data;

(2) a subcontractor or prospective subcontractor furnished the Contractor cost or pricing data that were not complete, accurate, and current as certified in the Contractor's Certificate of Current Cost or Pricing Data; or

(3) any of these parties furnished data of any description that were not accurate, the price shall be reduced accordingly and the contract shall be modified to reflect the reduction. This right to a price reduction is limited to that resulting from defects in data relating to modifications for which this clause becomes operative under paragraph (a) above.

(c) Any reduction in the contract price under paragraph (b) above due to defective data from a prospective subcontractor that was not subsequently awarded the subcontract shall be limited to the amount, plus applicable overhead and profit markup, by which:

(1) the actual subcontract; or

(2) the actual cost to the Contractor, if there was no subcontract, was less than the prospective subcontract cost estimate submitted by the Contractor; provided, that the actual subcontract price was not itself affected by defective cost or pricing data.

(d) If the Contracting Officer determines under paragraph (b) of this clause that a price or cost reduction should be made:

(1) the Contractor agrees not to raise the following matters as a defense:

(i) The Contractor or subcontractor was a sole source supplier or otherwise was in a superior bargaining position and thus the price of the contract would not have been modified even if accurate, complete, and current cost or pricing data had been submitted;

(ii) The Contracting Officer should have known that the cost or pricing data in issue were defective even though the Contractor or subcontractor took no affirmative action to bring the character of the data to the attention of the Contracting Officer;

(iii) The contract was based on an agreement about the total cost of the contract and there was no agreement about the cost of each item procured under the contract; or

(iv) The Contractor or subcontractor did not submit a Certificate of Current Cost or Pricing Data.

(2) Except as prohibited by subdivision (d)(2)(ii) of this clause:

(i) an offset in an amount determined appropriate by the Contracting Officer based upon the facts shall be allowed against the amount of a contract price reduction if:

(A) The Contractor certifies to the Contracting Officer that, to the best of the Contractor's knowledge and belief, the Contractor is entitled to the offset in the amount requested; and

(B) The Contractor proves that the cost or pricing data were available before the date of agreement on the price of the contract (or price of the modification) and that the data were not submitted before such date.

(ii) An offset shall not be allowed if:

(A) The understated data was known by the Contractor to be understated when the Certificate of Current Cost or Pricing Data was signed; or (B) The Government proves that the facts

demonstrate that the contract price would not have increased in the amount to be offset even if the available data had been submitted before the date of agreement on price.

(e) If any reduction in the contract price under this clause reduces the price of items for which payment was made prior to the date of the modification reflecting the price reduction, the Contractor shall be liable to and shall pay the United States at the time such overpayment is repaid:

(1) Simple interest on the amount of such overpayment to be computed from the date(s) of overpayment to the Contractor to the date the Government is repaid by the Contractor at the applicable underpayment rate effective for each quarter prescribed by the Secretary of the Treasury under 26 U.S.C. 6621(a)(2); and

(2) A penalty equal to the amount of the overpayment, if the Contractor or subcontractor knowingly submitted cost or pricing data which were incomplete, inaccurate, or noncurrent.

52.214-28 SUBCONTRACTOR COST OR PRICING DATA - MODIFICATIONS - SEALED BIDDING (OCT 1997)

(a) The requirements of paragraphs (b) and (c) of this clause shall:

(1) become operative only for any modification to this contract involving aggregate increases and/or decreases in costs, plus applicable profits, expected to exceed the threshold for submission of cost or pricing data at (FAR) 48 CFR 15.403-4(a)(1); and

(2) be limited to such modifications.

(b) Before awarding any subcontract expected to exceed the threshold for submission of cost or pricing data at FAR 15.403-4(a)(1), on the date of agreement on price or the date of award, whichever is later; or before pricing any subcontract modifications involving aggregate increases and/or decreases in costs, plus applicable profits, expected to exceed the threshold for submission of cost or pricing data at FAR 15.403-4(a)(1), the Contractor shall require the subcontractor to submit cost or pricing data (actually or by specific identification in writing), unless an exception under FAR 15.403-1(b) applies.

(1) Based on adequate price competition;

(2) Based on established catalog or market prices of commercial items sold in substantial quantities to the general public; or

(3) Set by law or regulation.

(c) The Contractor shall require the subcontractor to certify in substantially the form prescribed in subsection 15.406-2 of the Federal Acquisition Regulation that, to the best of its knowledge

and belief, the data submitted under paragraph (b) above were accurate, complete, and current as of the date of agreement on the negotiated price of the subcontract or subcontract modification.

(d) The Contractor shall insert the substance of this clause, including this paragraph (d), in each subcontract that, when entered into, exceeds the threshold for submission of cost or pricing data at FAR 15.403-4(a)(1).

52.214-29 ORDER OF PRECEDENCE--SEALED BIDDING (JAN 1986)

Any inconsistency in this solicitation or contract shall be resolved by giving precedence in the following order: (a) the Schedule (excluding the specifications); (b) representations and other instructions; (c) contract clauses; (d) other documents, exhibits, and attachments; and (e) the specifications.

(End of clause)

52.219-8 UTILIZATION OF SMALL BUSINESS CONCERNS (OCT 2000)

(a) It is the policy of the United States that small business concerns, veteran-owned small business concerns, service-disabled veteran-owned small business concerns, HUBZone small business concerns, small disadvantaged business concerns, and women-owned small business concerns shall have the maximum practicable opportunity to participate in performing contracts let by any Federal agency, including contracts and subcontracts for subsystems, assemblies, components, and related services for major systems. It is further the policy of the United States that its prime contractors establish procedures to ensure the timely payment of amounts due pursuant to the terms of their subcontracts with small business concerns, veteran-owned small business concerns, service-disabled veteran-owned small business concerns, HUBZone small business concerns, small disadvantaged business concerns, and women-owned small business concerns.

(b) The Contractor hereby agrees to carry out this policy in the awarding of subcontracts to the fullest extent consistent with efficient contract performance. The Contractor further agrees to cooperate in any studies or surveys as may be conducted by the United States Small Business Administration or the awarding agency of the United States as may be necessary to determine the extent of the Contractor's compliance with this clause.

Definitions. As used in this contract--

HUBZone small business concern means a small business concern that appears on the List of Qualified HUBZone Small Business Concerns maintained by the Small Business Administration.

Service-disabled veteran-owned small business concern--

(1) Means a small business concern--

(i) Not less than 51 percent of which is owned by one or more service-disabled veterans or, in the case of any publicly owned business, not less than 51 percent of the stock of which is owned by one or more service-disabled veterans; and

(ii) The management and daily business operations of which are controlled by one or more service-disabled veterans or, in the case of a veteran with permanent and severe disability, the spouse or permanent caregiver of such veteran.

(2) Service-disabled veteran means a veteran, as defined in 38 U.S.C. 101(2), with a disability that is service-connected, as defined in 38 U.S.C. 101(16).

Small business concern means a small business as defined pursuant to Section 3 of the Small Business Act and relevant regulations promulgated pursuant thereto.

Small disadvantaged business concern means a small business concern that represents, as part of its offer that--

(1) It has received certification as a small disadvantaged business concern consistent with 13 CFR part 124, subpart B;

(2) No material change in disadvantaged ownership and control has occurred since its certification;

(3) Where the concern is owned by one or more individuals, the net worth of each individual upon whom the certification is based does not exceed $750,000 after taking into account the applicable exclusions set forth at 13 CFR 124.104(c)(2); and

(4) It is identified, on the date of its representation, as a certified small disadvantaged business in the database maintained by the Small Business Administration (PRO-Net).

Veteran-owned small business concern means a small business concern--

(1) Not less than 51 percent of which is owned by one or more veterans (as defined at 38 U.S.C. 101(2)) or, in the case of any publicly owned business, not less than 51 percent of the stock of which is owned by one or more veterans; and

(2) The management and daily business operations of which are controlled by one or more veterans.

Women-owned small business concern means a small business concern--

(1) That is at least 51 percent owned by one or more women, or, in the case of any publicly owned business, at least 51 percent of the stock of which is owned by one or more women; and

(2) Whose management and daily business operations are controlled by one or more women.

(d) Contractors acting in good faith may rely on written representations by their subcontractors regarding their status as a small business concern, a veteran-owned small business concern, a service-disabled veteran-owned small business concern, a HUBZone small business concern, a small disadvantaged business concern, or a women-owned small business concern.

(End of clause)

52.222-3 CONVICT LABOR (AUG 1996)

The Contractor agrees not to employ in the performance of this contract any person undergoing a sentence of imprisonment which has been imposed by any court of a State, the District of Columbia, the Commonwealth of Puerto Rico, the Virgin Islands, Guam, American Samoa, the Commonwealth of the Northern Mariana Islands, or the Trust Territory of the Pacific Islands. This limitation, however, shall not prohibit the employment by the Contractor in the performance of this contract of persons on parole or probation to work at paid employment during the term of their sentence or persons who have been pardoned or who have served their terms. Nor shall it prohibit the employment by the Contractor in the performance of this contract of persons confined for violation of the laws of any of the States, the District of Columbia, the Commonwealth of Puerto Rico, the Virgin Islands, Guam, American Samoa, the Commonwealth of the Northern Mariana Islands, or the Trust Territory of the Pacific Islands who are authorized to work at paid employment in the community under the laws of such jurisdiction, if--

(a)(1) The worker is paid or is in an approved work training program on a voluntary basis;

(2) Representatives of local union central bodies or similar labor union organizations have been consulted;

(3) Such paid employment will not result in the displacement of employed workers, or be applied in skills, crafts, or trades in which there is a surplus of available gainful labor in the locality, or impair existing contracts for services; and

(4) The rates of pay and other conditions of employment will not be less than those paid or provided for work of a similar nature in the locality in which the work is being performed; and

(b) The Attorney General of the United States has certified that the work-release laws or regulations of the jurisdiction involved are in conformity with the requirements of Executive Order 11755, as amended by Executive Orders 12608 and 12943.

(End of clause)

52.222-4 CONTRACT WORK HOURS AND SAFETY STANDARDS ACT - OVERTIME COMPENSATION (SEP 2000)

(a) Overtime requirements. No Contractor or subcontractor employing laborers or mechanics (see Federal Acquisition Regulation 22.300) shall require or permit them to work over 40 hours in any workweek unless they are paid at least 1 and 1/2 times the basic rate of pay for each hour worked over 40 hours.

(b) Violation; liability for unpaid wages; liquidated damages. The responsible Contractor and subcontractor are liable for unpaid wages if they violate the terms in paragraph (a) of this clause. In addition, the Contractor and subcontractor are liable for liquidated damages payable to the Government. The Contracting Officer will assess liquidated damages at the rate of $10 per affected employee for each calendar day on which the employer required or permitted the employee to work in excess of the standard workweek of 40 hours without paying overtime wages required by the Contract Work Hours and Safety Standards Act.

(c) Withholding for unpaid wages and liquidated damages. The Contracting Officer will withhold from payments due under the contract sufficient funds required to satisfy any Contractor or subcontractor liabilities for unpaid wages and liquidated damages. If amounts withheld under the contract are insufficient to satisfy Contractor or subcontractor liabilities, the Contracting Officer will withhold payments from other Federal or Federally assisted contracts held by the same Contractor that are subject to the Contract Work Hours and Safety Standards Act.

(d) Payrolls and basic records.

(1) The Contractor and its subcontractors shall maintain payrolls and basic payroll records for all laborers and mechanics working on the contract during the contract and shall make them available to the Government until 3 years after contract completion. The records shall contain the name and address of each employee, social security number, labor classifications, hourly rates of wages paid, daily and weekly number of hours worked, deductions made, and actual wages paid. The records need not duplicate those required for construction work by Department of Labor regulations at 29 CFR 5.5(a)(3) implementing the Davis-Bacon Act.

(2) The Contractor and its subcontractors shall allow authorized representatives of the Contracting Officer or the Department of Labor to inspect, copy, or transcribe records maintained under paragraph (d)(1) of this clause. The Contractor or subcontractor also shall allow authorized representatives of the Contracting Officer or Department of Labor to interview employees in the workplace during working hours.

(e) Subcontracts. The Contractor shall insert the provisions set forth in paragraphs (a) through (d) of this clause in subcontracts exceeding $100,000 and require subcontractors to include these provisions in any lower tier subcontracts. The Contractor shall be responsible for compliance by any subcontractor or lower-tier subcontractor with the provisions set forth in paragraphs (a) through (d) of this clause.

(End of clause)

52.222-6 DAVIS-BACON ACT (FEB 1995)

(a) All laborers and mechanics employed or working upon the site of the work will be paid unconditionally and not less often than once a week, and without subsequent deduction or rebate on any account (except such payroll deductions as are permitted by regulations issued by the Secretary of Labor under the Copeland Act (29 CFR Part 3), the full amount of wages and bona fide fringe benefits (or cash equivalents thereof) due at time of payment computed at rates not less than those contained in the wage determination of the Secretary of Labor which is attached hereto and made a part hereof, regardless of any contractual relationship which may be alleged to exist between the Contractor and such laborers and mechanics. Contributions made or costs reasonably anticipated for bona fide fringe benefits under section 1(b)(2) of the Davis-Bacon Act on behalf of laborers or mechanics are considered wages paid to such laborers or mechanics, subject to the provisions of paragraph (d) of this clause; also, regular contributions made or costs incurred for more than a weekly period (but not less often than quarterly) under plans, funds, or programs which cover the particular weekly period, are deemed to be constructively made or incurred during such period. Such laborers and mechanics shall be paid not less than the appropriate wage rate and fringe benefits in the wage determination for the classification of work actually performed, without regard to skill, except as provided in the clause entitled Apprentices and Trainees. Laborers or mechanics performing work in more than one classification may be compensated at the rate specified for each classification for the time actually worked therein; provided, That the employer's payroll records accurately set forth the time spent in each classification in which work is performed. The wage determination (including any additional classifications and wage rates conformed under paragraph (b) of this clause) and the Davis-Bacon poster (WH-1321) shall be posted at all times by the Contractor and its subcontractors at the site of the work in a prominent and accessible place where it can be easily seen by the workers.

(b)(1) The Contracting Officer shall require that any class of laborers or mechanics which is not listed in the wage determination and which is to be employed under the contract shall be classified in conformance with the wage determination. The Contracting Officer shall approve an additional classification and wage rate and fringe benefits therefor only when all the following criteria have been met:

(i) The work to be performed by the classification requested is not performed by a classification in the wage determination.

(ii) The classification is utilized in the area by the construction industry.

(iii) The proposed wage rate, including any bona fide fringe benefits, bears a reasonable relationship to the wage rates contained in the wage determination.

(2) If the Contractor and the laborers and mechanics to be employed in the classification (if known), or their representatives, and the Contracting Officer agree on the classification and wage

rate (including the amount designated for fringe benefits, where appropriate), a report of the action taken shall be sent by the Contracting Officer to the Administrator of the Wage and Hour Division, Employment Standards Administration, U.S. Department of Labor, Washington, DC 20210. The Administrator or an authorized representative will approve, modify, or disapprove every additional classification action within 30 days of receipt and so advise the Contracting Officer or will notify the Contracting Officer within the 30-day period that additional time is necessary.

(3) In the event the Contractor, the laborers or mechanics to be employed in the classification, or their representatives, and the Contracting Officer do not agree on the proposed classification and wage rate (including the amount designated for fringe benefits, where appropriate), the Contracting Officer shall refer the questions, including the views of all interested parties and the recommendation of the Contracting Officer, to the Administrator of the Wage and Hour Division for determination. The Administrator, or an authorized representative, will issue a determination within 30 days of receipt and so advise the Contracting Officer or will notify the Contracting Officer within the 30-day period that additional time is necessary.

(4) The wage rate (including fringe benefits, where appropriate) determined pursuant to subparagraphs (b)(2) and (b)(3) of this clause shall be paid to all workers performing work in the classification under this contract from the first day on which work is performed in the classification.

(c) Whenever the minimum wage rate prescribed in the contract for a class of laborers or mechanics includes a fringe benefit which is not expressed as an hourly rate, the Contractor shall either pay the benefit as stated in the wage determination or shall pay another bona fide fringe benefit or an hourly cash equivalent thereof.

(d) If the Contractor does not make payments to a trustee or other third person, the Contractor may consider as part of the wages of any laborer or mechanic the amount of any costs reasonably anticipated in providing bona fide fringe benefits under a plan or program; provided, That the Secretary of Labor has found, upon the written request of the Contractor, that the applicable standards of the Davis-Bacon Act have been met. The Secretary of Labor may require the Contractor to set aside in a separate account assets for the meeting of obligations under the plan or program.

52.222-7 WITHHOLDING OF FUNDS (FEB 1988)

The Contracting Officer shall, upon his or her own action or upon written request of an authorized representative of the Department of Labor, withhold or cause to be withheld from the Contractor under this contract or any other Federal contract with the same Prime Contractor, or any other Federally assisted contract subject to Davis-Bacon prevailing wage requirements, which is held by the same Prime Contractor, so much of the accrued payments or advances as may be considered necessary to pay laborers and mechanics, including apprentices, trainees, and helpers, employed by the Contractor or any subcontractor the full amount of wages required by the contract. In the event of failure to pay any laborer or mechanic, including any apprentice,

trainee, or helper, employed or working on the site of the work, all or part of the wages required by the contract, the Contracting Officer may, after written notice to the Contractor, take such action as may be necessary to cause the suspension of any further payment, advance, or guarantee of funds until such violations have ceased.

52.222-8 PAYROLLS AND BASIC RECORDS (FEB 1988)

(a) Payrolls and basic records relating thereto shall be maintained by the Contractor during the course of the work and preserved for a period of 3 years thereafter for all laborers and mechanics working at the site of the work. Such records shall contain the name, address, and social security number of each such worker, his or her correct classification, hourly rates of wages paid (including rates of contributions or costs anticipated for bona fide fringe benefits or cash equivalents thereof of the types described in section 1(b)(2)(B) of the Davis-Bacon Act), daily and weekly number of hours worked, deductions made, and actual wages paid. Whenever the Secretary of Labor has found, under paragraph (d) of the clause entitled Davis-Bacon Act, that the wages of any laborer or mechanic include the amount of any costs reasonably anticipated in providing benefits under a plan or program described in section 1(b)(2)(B) of the Davis-Bacon Act, the Contractor shall maintain records which show that the commitment to provide such benefits is enforceable, that the plan or program is financially responsible, and that the plan or program has been communicated in writing to the laborers or mechanics affected, and records which show the costs anticipated or the actual cost incurred in providing such benefits. Contractors employing apprentices or trainees under approved programs shall maintain written evidence of the registration of apprenticeship programs and certification of trainee programs, the registration of the apprentices and trainees, and the ratios and wage rates prescribed in the applicable programs.

(b)(1) The Contractor shall submit weekly for each week in which any contract work is performed a copy of all payrolls to the Contracting Officer. The payrolls submitted shall set out accurately and completely all of the information required to be maintained under paragraph (a) of this clause. This information may be submitted in any form desired. Optional Form WH-347 (Federal Stock Number 029-005-00014-1) is available for this purpose and may be purchased from the Superintendent of Documents, U.S. Government Printing Office, Washington, DC 20402. The Prime Contractor is responsible for the submission of copies of payrolls by all subcontractors.

(2) Each payroll submitted shall be accompanied by a "Statement of Compliance," signed by the Contractor or subcontractor or his or her agent who pays or supervises the payment of the persons employed under the contract and shall certify--

(i) That the payroll for the payroll period contains the information required to be maintained under paragraph (a) of this clause and that such information is correct and complete;

(ii) That each laborer or mechanic (including each helper, apprentice, and trainee) employed on the contract during the payroll period has been paid the full weekly wages earned, without

rebate, either directly or indirectly, and that no deductions have been made either directly or indirectly from the full wages earned, other than permissible deductions as set forth in the Regulations, 29 CFR Part 3; and

(iii) That each laborer or mechanic has been paid not less than the applicable wage rates and fringe benefits or cash equivalents for the classification of work performed, as specified in the applicable wage determination incorporated into the contract.

(3) The weekly submission of a properly executed certification set forth on the reverse side of Optional Form WH-347 shall satisfy the requirement for submission of the "Statement of Compliance" required by subparagraph (b)(2) of this clause.

(4) The falsification of any of the certifications in this clause may subject the Contractor or subcontractor to civil or criminal prosecution under Section 1001 of Title 18 and Section 3729 of Title 31 of the United States Code.

(c) The Contractor or subcontractor shall make the records required under paragraph (a) of this clause available for inspection, copying, or transcription by the Contracting Officer or authorized representatives of the Contracting Officer or the Department of Labor. The Contractor or subcontractor shall permit the Contracting Officer or representatives of the Contracting Officer or the Department of Labor to interview employees during working hours on the job. If the Contractor or subcontractor fails to submit required records or to make them available, the Contracting Officer may, after written notice to the Contractor, take such action as may be necessary to cause the suspension of any further payment. Furthermore, failure to submit the required records upon request or to make such records available may be grounds for debarment action pursuant to 29 CFR 5.12.

52.222-9 APPRENTICES AND TRAINEES (FEB 1988)

(a) Apprentices. Apprentices will be permitted to work at less than the predetermined rate for the work they performed when they are employed pursuant to and individually registered in a bona fide apprenticeship program registered with the U.S. Department of Labor, Employment and Training Administration, Bureau of Apprenticeship and Training, or with a State Apprenticeship Agency recognized by the Bureau, or if a person is employed in his or her first 90 days of probationary employment as an apprentice in such an apprenticeship program, who is not individually registered in the program, but who has been certified by the Bureau of Apprenticeship and Training or a State Apprenticeship Agency (where appropriate) to be eligible for probationary employment as an apprentice. The allowable ratio of apprentices to journeymen on the job site in any craft classification shall not be greater than the ratio permitted to the Contractor as to the entire work force under the registered program. Any worker listed on a payroll at an apprentice wage rate, who is not registered or otherwise employed as stated in this paragraph, shall be paid not less than the applicable wage determination for the classification of work actually performed. In addition, any apprentice performing work on the job site in excess of the ratio permitted under the registered program shall be paid not less than the applicable

wage rate on the wage determination for the work actually performed. Where a contractor is performing construction on a project in a locality other than that in which its program is registered, the ratios and wage rates (expressed in percentages of the journeyman's hourly rate) specified in the Contractor's or subcontractor's registered program shall be observed. Every apprentice must be paid at not less than the rate specified in the registered program for the apprentice's level of progress, expressed as a percentage of the journeyman hourly rate specified in the applicable wage determination. Apprentices shall be paid fringe benefits in accordance with the provisions of the apprenticeship program. If the apprenticeship program does not specify fringe benefits, apprentices must be paid the full amount of fringe benefits listed on the wage determination for the applicable classification. If the Administrator determines that a different practice prevails for the applicable apprentice classification, fringes shall be paid in accordance with that determination. In the event the Bureau of Apprenticeship and Training, or a State Apprenticeship Agency recognized by the Bureau, withdraws approval of an apprenticeship program, the Contractor will no longer be permitted to utilize apprentices at less than the applicable predetermined rate for the work performed until an acceptable program is approved.

(b) Trainees. Except as provided in 29 CFR 5.16, trainees will not be permitted to work at less than the predetermined rate for the work performed unless they are employed pursuant to and individually registered in a program which has received prior approval, evidenced by formal certification by the U.S. Department of Labor, Employment and Training Administration. The ratio of trainees to journeymen on the job site shall not be greater than permitted under the plan approved by the Employment and Training Administration. Every trainee must be paid at not less than the rate specified in the approved program for the trainee's level of progress, expressed as a percentage of the journeyman hourly rate specified in the applicable wage determination. Trainees shall be paid fringe benefits in accordance with the provisions of the trainee program. If the trainee program does not mention fringe benefits, trainees shall be paid the full amount of fringe benefits listed in the wage determination unless the Administrator of the Wage and Hour Division determines that there is an apprenticeship program associated with the corresponding journeyman wage rate in the wage determination which provides for less than full fringe benefits for apprentices. Any employee listed on the payroll at a trainee rate who is not registered and participating in a training plan approved by the Employment and Training Administration shall be paid not less than the applicable wage rate in the wage determination for the classification of work actually performed. In addition, any trainee performing work on the job site in excess of the ratio permitted under the registered program shall be paid not less than the applicable wage rate in the wage determination for the work actually performed. In the event the Employment and Training Administration withdraws approval of a training program, the Contractor will no longer be permitted to utilize trainees at less than the applicable predetermined rate for the work performed until an acceptable program is approved.

(c) Equal employment opportunity. The utilization of apprentices, trainees, and journeymen under this clause shall be in conformity with the equal employment opportunity requirements of Executive Order 11246, as amended, and 29 CFR Part 30.

52.222-10 COMPLIANCE WITH COPELAND ACT REQUIREMENTS (FEB 1988)

The Contractor shall comply with the requirements of 29 CFR Part 3, which are hereby incorporated by reference in this contract.

52.222-11 SUBCONTRACTS (LABOR STANDARDS (FEB 1988)

(a) The Contractor or subcontractor shall insert in any subcontracts the clauses entitled Davis-Bacon Act, Contract Work Hours and Safety Standards Act-Overtime Compensation, Apprentices and Trainees, Payrolls and Basic Records, Compliance with Copeland Act Requirements, Withholding of Funds, Subcontracts (Labor Standards), Contract Termination-Debarment, Disputes Concerning Labor Standards, Compliance with Davis-Bacon and Related Act Regulations, and Certification of Eligibility, and such other clauses as the Contracting Officer may, by appropriate instructions, require, and also a clause requiring subcontractors to include these clauses in any lower tier subcontracts. The Prime Contractor shall be responsible for compliance by any subcontractor or lower tier subcontractor with all the contract clauses cited in this paragraph.

(b)(1) Within 14 days after award of the contract, the Contractor shall deliver to the Contracting Officer a completed Statement and Acknowledgment Form (SF 1413) for each subcontract, including the subcontractor's signed and dated acknowledgment that the clauses set forth in paragraph (a) of this clause have been included in the subcontract.

(2) Within 14 days after the award of any subsequently awarded subcontract the Contractor shall deliver to the Contracting Officer an updated completed SF 1413 for such additional subcontract.

52.222-12 CONTRACT TERMINATION--DEBARMENT (FEB 1988)

A breach of the contract clauses entitled Davis-Bacon Act, Contract Work Hours and Safety Standards Act--Overtime Compensation, Apprentices and Trainees, Payrolls and Basic Records, Compliance with Copeland Act Requirements, Subcontracts (Labor Standards), Compliance with Davis-Bacon and Related Act Regulations, or Certification of Eligibility may be grounds for termination of the contract, and for debarment as a Contractor and subcontractor as provided in 29 CFR 5.12.

52.222-13 COMPLIANCE WITH DAVIS-BACON AND RELATED ACT REGULATIONS (FEB 1988)

All rulings and interpretations of the Davis-Bacon and Related Acts contained in 29 CFR Parts 1, 3, and 5 are hereby incorporated by reference in this contract.

52.222-14 DISPUTES CONCERNING LABOR STANDARDS (FEB 1988)

The United States Department of Labor has set forth in 29 CFR Parts 5, 6, and 7 procedures for resolving disputes concerning labor standards requirements. Such disputes shall be resolved in accordance with those procedures and not the Disputes clause of this contract. Disputes within the meaning of this clause include disputes between the Contractor (or any of its subcontractors) and the contracting agency, the U.S. Department of Labor, or the employees or their representatives.

52.222-15 CERTIFICATION OF ELIGIBILITY (FEB 1988)

(a) By entering into this contract, the Contractor certifies that neither it (nor he or she) nor any person or firm who has an interest in the Contractor's firm is a person or firm ineligible to be awarded Government contracts by virtue of section 3(a) of the Davis-Bacon Act or 29 CFR 5.12(a)(1).

(b) No part of this contract shall be subcontracted to any person or firm ineligible for award of a Government contract by virtue of section 3(a) of the Davis-Bacon Act or 29 CFR 5.12(a)(1).

(c) The penalty for making false statements is prescribed in the U.S. Criminal Code, 18 U.S.C. 1001.

52.222-21 PROHIBITION OF SEGREGATED FACILITIES (FEB 1999)

(a) Segregated facilities, as used in this clause, means any waiting rooms, work areas, rest rooms and wash rooms, restaurants and other eating areas, time clocks, locker rooms and other storage or dressing areas, parking lots, drinking fountains, recreation or entertainment areas, transportation, and housing facilities provided for employees, that are segregated by explicit directive or are in fact segregated on the basis of race, color, religion, sex, or national origin because of written or oral policies or employee custom. The term does not include separate or single-user rest rooms or necessary dressing or sleeping areas provided to assure privacy between the sexes.

(b) The Contractor agrees that it does not and will not maintain or provide for its employees any segregated facilities at any of its establishments, and that it does not and will not permit its employees to perform their services at any location under its control where segregated facilities are maintained. The Contractor agrees that a breach of this clause is a violation of the Equal Opportunity clause in this contract.

(c) The Contractor shall include this clause in every subcontract and purchase order that is subject to the Equal Opportunity clause of this contract.

(End of clause)

52.222-26 EQUAL OPPORTUNITY (FEB 1999)

(a) If, during any 12-month period (including the 12 months preceding the award of this contract), the Contractor has been or is awarded nonexempt Federal contracts and/or subcontracts that have an aggregate value in excess of $10,000, the Contractor shall comply with subparagraphs (b)(1) through (11) of this clause. Upon request, the Contractor shall provide information necessary to determine the applicability of this clause.

(b) During performing this contract, the Contractor agrees as follows:

(1) The Contractor shall not discriminate against any employee or applicant for employment because of race, color, religion, sex, or national origin. However, it shall not be a violation of this clause for the Contractor to extend a publicly announced preference in employment to Indians living on or near an Indian reservation, in connection with employment opportunities on or near an Indian reservation, as permitted by 41 CFR 60-1.5.

(2) The Contractor shall take affirmative action to ensure that applicants are employed, and that employees are treated during employment, without regard to their race, color, religion, sex, or national origin. This shall include, but not be limited to, (i) employment, (ii) upgrading, (iii) demotion, (iv) transfer, (v) recruitment or recruitment advertising, (vi) layoff or termination, (vii) rates of pay or other forms of compensation, and (viii) selection for training, including apprenticeship.

(3) The Contractor shall post in conspicuous places available to employees and applicants for employment the notices to be provided by the Contracting Officer that explain this clause.

(4) The Contractor shall, in all solicitations or advertisements for employees placed by or on behalf of the Contractor, state that all qualified applicants will receive consideration for employment without regard to race, color, religion, sex, or national origin.

(5) The Contractor shall send, to each labor union or representative of workers with which it has a collective bargaining agreement or other contract or understanding, the notice to be provided by the Contracting Officer advising the labor union or workers' representative of the Contractor's commitments under this clause, and post copies of the notice in conspicuous places available to employees and applicants for employment.

(6) The Contractor shall comply with Executive Order 11246, as amended, and the rules, regulations, and orders of the Secretary of Labor.

(7) The Contractor shall furnish to the contracting agency all information required by Executive Order 11246, as amended, and by the rules, regulations, and orders of the Secretary of Labor. The Contractor shall also file Standard Form 100 (EEO-1), or any successor form, as prescribed in 41 CFR part 60-1. Unless the Contractor has filed within the 12 months preceding the date of contract award, the Contractor shall, within 30 days after contract award, apply to either the regional Office of Federal Contract Compliance Programs (OFCCP) or the local office of the Equal Employment Opportunity Commission for the necessary forms.

(8) The Contractor shall permit access to its premises, during normal business hours, by the contracting agency or the OFCCP for the purpose of conducting on-site compliance evaluations and complaint investigations. The Contractor shall permit the Government to inspect and copy any books, accounts, records (including computerized records), and other material that may be relevant to the matter under investigation and pertinent to compliance with Executive Order 11246, as amended, and rules and regulations that implement the Executive Order.

(9) If the OFCCP determines that the Contractor is not in compliance with this clause or any rule, regulation, or order of the Secretary of Labor, this contract may be canceled, terminated, or suspended in whole or in part and the Contractor may be declared ineligible for further Government contracts, under the procedures authorized in Executive Order 11246, as amended. In addition, sanctions may be imposed and remedies invoked against the Contractor as provided in Executive Order 11246, as amended; in the rules, regulations, and orders of the Secretary of Labor; or as otherwise provided by law.

(10) The Contractor shall include the terms and conditions of subparagraphs (b)(1) through (11) of this clause in every subcontract or purchase order that is not exempted by the rules, regulations, or orders of the Secretary of Labor issued under Executive Order 11246, as amended, so that these terms and conditions will be binding upon each subcontractor or vendor.

(11) The Contractor shall take such action with respect to any subcontract or purchase order as the contracting officer may direct as a means of enforcing these terms and conditions, including sanctions for noncompliance; provided, that if the Contractor becomes involved in, or is threatened with, litigation with a subcontractor or vendor as a result of any direction, the Contractor may request the United States to enter into the litigation to protect the interests of the United States.

(c) Notwithstanding any other clause in this contract, disputes relative to this clause will be governed by the procedures in 41 CFR 60-1.1.

52.222-27 AFFIRMATIVE ACTION COMPLIANCE REQUIREMENTS FOR CONSTRUCTION (FEB 1999)

(a) Definitions. "Covered area," as used in this clause, means the geographical area described in the solicitation for this contract.

"Deputy Assistant Secretary," as used in this clause, means Deputy Assistant Secretary for Federal Contract Compliance, U.S. Department of Labor, or a designee.

"Employer's identification number," as used in this clause, means the Federal Social Security number used on the employer's quarterly federal tax return, U.S. Treasury Department Form 941.

"Minority," as used in this clause, means--

(1) American Indian or Alaskan Native (all persons having origins in any of the original peoples of North America and maintaining identifiable tribal affiliations through membership and participation or community identification).

(2) Asian and Pacific Islander (all persons having origins in any of the original peoples of the Far East, Southeast Asia, the Indian Subcontinent, or the Pacific Islands);

(3) Black (all persons having origins in any of the black African racial groups not of Hispanic origin); and

(4) Hispanic (all persons of Mexican, Puerto Rican, Cuban, Central or South American, or other Spanish culture or origin, regardless of race).

(b) If the Contractor, or a subcontractor at any tier, subcontracts a portion of the work involving any construction trade, each such subcontract in excess of $10,000 shall include this clause and the Notice containing the goals for minority and female participation stated in the solicitation for this contract.

(c) If the Contractor is participating in a Hometown Plan (41 CFR 60-4) approved by the U.S. Department of Labor in a covered area, either individually or through an association, its affirmative action obligations on all work in the plan area (including goals) shall comply with the plan for those trades that have unions participating in the plan. Contractors must be able to demonstrate participation in, and compliance with, the provisions of the plan. Each Contractor or subcontractor participating in an approved plan is also required to comply with its obligations under the Equal Opportunity clause, and to make a good faith effort to achieve each goal under the plan in each trade in which it has employees. The overall good-faith performance by other Contractors or subcontractors toward a goal in an approved plan does not excuse any Contractor's or subcontractor's failure to make good-faith efforts to achieve the plan's goals.

(d) The Contractor shall implement the affirmative action procedures in subparagraphs (g)(1) through (16) of this clause. The goals stated in the solicitation for this contract are expressed as percentages of the total hours of employment and training of minority and female utilization that the Contractor should reasonably be able to achieve in each construction trade in which it has employees in the covered area. If the Contractor performs construction work in a geographical area located outside of the covered area, it shall apply the goals established for the geographical area where that work is actually performed. The Contractor is expected to make substantially uniform progress toward its goals in each craft.

(e) Neither the terms and conditions of any collective bargaining agreement, nor the failure by a union with which the Contractor has a collective bargaining agreement, to refer minorities or women shall excuse the Contractor's obligations under this clause, Executive Order 11246, as amended, or the regulations thereunder.

(f) In order for the nonworking training hours of apprentices and trainees to be counted in meeting the goals, apprentices and trainees must be employed by the Contractor during the training period, and the Contractor must have made a commitment to employ the apprentices and trainees at the completion of their training, subject to the availability of employment opportunities. Trainees must be trained pursuant to training programs approved by the U.S. Department of Labor.

(g) The Contractor shall take affirmative action to ensure equal employment opportunity. The evaluation of the Contractor's compliance with this clause shall be based upon its effort to achieve maximum results from its actions. The Contractor shall document these efforts fully and implement affirmative action steps at least as extensive as the following:

(1) Ensure a working environment free of harassment, intimidation, and coercion at all sites and in all facilities where the Contractor's employees are assigned to work. The Contractor, if possible, will assign two or more women to each construction project. The Contractor shall ensure that foremen, superintendents, and other onsite supervisory personnel are aware of and carry out the Contractor's obligation to maintain such a working environment, with specific attention to minority or female individuals working at these sites or facilities.

(2) Establish and maintain a current list of sources for minority and female recruitment. Provide written notification to minority and female recruitment sources and community organizations when the Contractor or its unions have employment opportunities available, and maintain a record of the organizations' responses.

(3) Establish and maintain a current file of the names, addresses, and telephone numbers of each minority and female off-the-street applicant, referrals of minorities or females from unions, recruitment sources, or community organizations, and the action taken with respect to each individual. If an individual was sent to the union hiring hall for referral and not referred back to the Contractor by the union or, if referred back, not employed by the Contractor, this shall be documented in the file, along with whatever additional actions the Contractor may have taken.

(4) Immediately notify the Deputy Assistant Secretary when the union or unions with which the Contractor has a collective bargaining agreement has not referred back to the Contractor a minority or woman sent by the Contractor, or when the Contractor has other information that the union referral process has impeded the Contractor's efforts to meet its obligations.

(5) Develop on-the-job training opportunities and/or participate in training programs for the area that expressly include minorities and women, including upgrading programs and apprenticeship and trainee programs relevant to the Contractor's employment needs, especially those programs funded or approved by the Department of Labor. The Contractor shall provide notice of these

programs to the sources compiled under subparagraph (g)(2) of this clause.

(6) Disseminate the Contractor's equal employment policy by--

(i) Providing notice of the policy to unions and to training, recruitment, and outreach programs, and requesting their cooperation in assisting the Contractor in meeting its contract obligations;

(ii) Including the policy in any policy manual and in collective bargaining agreements;

(iii) Publicizing the policy in the company newspaper, annual report, etc.;

(iv) Reviewing the policy with all management personnel and with all minority and female employees at least once a year; and

(v) Posting the policy on bulletin boards accessible to employees at each location where construction work is performed.

(7) Review, at least annually, the Contractor's equal employment policy and affirmative action obligations with all employees having responsibility for hiring, assignment, layoff, termination, or other employment decisions. Conduct review of this policy with all on-site supervisory personnel before initiating construction work at a job site. A written record shall be made and maintained identifying the time and place of these meetings, persons attending, subject matter discussed, and disposition of the subject matter.

(8) Disseminate the Contractor's equal employment policy externally by including it in any advertising in the news media, specifically including minority and female news media. Provide written notification to, and discuss this policy with, other Contractors and subcontractors with which the Contractor does or anticipates doing business.

(9) Direct recruitment efforts, both oral and written, to minority, female, and community organizations, to schools with minority and female students, and to minority and female recruitment and training organizations serving the Contractor's recruitment area and employment needs. Not later than 1 month before the date for acceptance of applications for apprenticeship or training by any recruitment source, send written notification to organizations such as the above, describing the openings, screening procedures, and tests to be used in the selection process.

(10) Encourage present minority and female employees to recruit minority persons and women. Where reasonable, provide after-school, summer, and vacation employment to minority and female youth both on the site and in other areas of the Contractor's workforce.

(11) Validate all tests and other selection requirements where required under 41 CFR 60-3.

(12) Conduct, at least annually, an inventory and evaluation at least of all minority and female personnel for promotional opportunities. Encourage these employees to seek or to prepare for, through appropriate training, etc., opportunities for promotion.

(13) Ensure that seniority practices, job classifications, work assignments, and other personnel practices do not have a discriminatory effect by continually monitoring all personnel and employment-related activities to ensure that the Contractor's obligations under this contract are being carried out.

(14) Ensure that all facilities and company activities are nonsegregated except that separate or single-user rest rooms and necessary dressing or sleeping areas shall be provided to assure privacy between the sexes.

(15) Maintain a record of solicitations for subcontracts for minority and female construction contractors and suppliers, including circulation of solicitations to minority and female contractor associations and other business associations.

(16) Conduct a review, at least annually, of all supervisors' adherence to and performance under the Contractor's equal employment policy and affirmative action obligations.

(h) The Contractor is encouraged to participate in voluntary associations that may assist in fulfilling one or more of the affirmative action obligations contained in subparagraphs (g)(1) through (16) of this clause. The efforts of a contractor association, joint contractor-union, contractor-community, or similar group of which the contractor is a member and participant may be asserted as fulfilling one or more of its obligations under subparagraphs (g)(1) through (16) of this clause, provided the Contractor--

(1) Actively participates in the group;

(2) Makes every effort to ensure that the group has a positive impact on the employment of minorities and women in the industry;

(3) Ensures that concrete benefits of the program are reflected in the Contractor's minority and female workforce participation;

(4) Makes a good-faith effort to meet its individual goals and timetables; and

(5) Can provide access to documentation that demonstrates the effectiveness of actions taken on behalf of the Contractor. The obligation to comply is the Contractor's, and failure of such a group to fulfill an obligation shall not be a defense for the Contractor's noncompliance.

(i) A single goal for minorities and a separate single goal for women shall be established. The Contractor is required to provide equal employment opportunity and to take affirmative action for all minority groups, both male and female, and all women, both minority and nonminority. Consequently, the Contractor may be in violation of Executive Order 11246, as amended, if a particular group is employed in a substantially disparate manner.

(j) The Contractor shall not use goals or affirmative action standards to discriminate against any person because of race, color, religion, sex, or national origin.

(k) The Contractor shall not enter into any subcontract with any person or firm debarred from Government contracts under Executive Order 11246, as amended.

(l) The Contractor shall carry out such sanctions and penalties for violation of this clause and of the Equal Opportunity clause, including suspension, termination, and cancellation of existing subcontracts, as may be imposed or ordered under Executive Order 11246, as amended, and its implementing regulations, by the OFCCP. Any failure to carry out these sanctions and penalties as ordered shall be a violation of this clause and Executive Order 11246, as amended.

(m) The Contractor in fulfilling its obligations under this clause shall implement affirmative action procedures at least as extensive as those prescribed in paragraph (g) of this clause, so as to achieve maximum results from its efforts to ensure equal employment opportunity. If the Contractor fails to comply with the requirements of Executive Order 11246, as amended, the implementing regulations, or this clause, the Deputy Assistant Secretary shall take action as prescribed in 41 CFR 60-4.8.

(n) The Contractor shall designate a responsible official to--

(1) Monitor all employment-related activity to ensure that the Contractor's equal employment policy is being carried out;

(2) Submit reports as may be required by the Government; and

(3) Keep records that shall at least include for each employee the name, address, telephone number, construction trade, union affiliation (if any), employee identification number, social security number, race, sex, status (e.g., mechanic, apprentice, trainee, helper, or laborer), dates of changes in status, hours worked per week in the indicated trade, rate of pay, and locations at which the work was performed. Records shall be maintained in an easily understandable and retrievable form; however, to the degree that existing records satisfy this requirement, separate records are not required to be maintained.

Nothing contained herein shall be construed as a limitation upon the application of other laws that establish different standards of compliance or upon the requirements for the hiring of local or other area residents (e.g., those under the Public Works Employment Act of 1977 and the Community Development Block Grant Program).

52.222-35 AFFIRMATIVE ACTION FOR DISABLED VETERANS AND VETERANS OF THE VIETNAM ERA (APR 1998)

(a)) Definitions. As used in this clause--

All employment openings includes all positions except executive and top management, those positions that will be filled from within the contractor's organization, and positions lasting 3 days or less. This term includes full-time employment, temporary employment of more than 3 days' duration, and part-time employment.

Appropriate office of the State employment service system means the local office of the Federal-State national system of public employment offices with assigned responsibility to serve the area where the employment opening is to be filled, including the District of Columbia, Guam, the Commonwealth of Puerto Rico, and the Virgin Islands.

Positions that will be filled from within the Contractor's organization means employment openings for which no consideration will be given to persons outside the Contractor's organization (including any affiliates, subsidiaries, and parent companies) and includes any openings that the Contractor proposes to fill from regularly established "recall" lists. The exception does not apply to a particular opening once an employer decides to consider applicants outside of its organization.

Veteran of the Vietnam era means a person who--

(1) Served on active duty for a period of more than 180 days, any part of which occurred between August 5, 1964, and May 7, 1975, and was discharged or released therefrom with other than a dishonorable discharge; or

(2) Was discharged or released from active duty for a service-connected disability if any part of such active duty was performed between August 5, 1964, and May 7, 1975.

(b) General. (1) Regarding any position for which the employee or applicant for employment is qualified, the Contractor shall not discriminate against the individual because the individual is a disabled veteran or a veteran of the Vietnam era. The Contractor agrees to take affirmative action to employ, advance in employment, and otherwise treat qualified disabled veterans and veterans of the Vietnam era without discrimination based upon their disability or veterans' status in all employment practices such as--

(i) Employment;

(ii) Upgrading;

(iii) Demotion or transfer;

(iv) Recruitment;

(v) Advertising;

(vi) Layoff or termination;

(vii) Rates of pay or other forms of compensation; and

(viii) Selection for training, including apprenticeship.

(2) The Contractor agrees to comply with the rules, regulations, and relevant orders of the Secretary of Labor (Secretary) issued under the Vietnam Era Veterans' Readjustment Assistance Act of 1972 (the Act), as amended.

(c) Listing openings. (1) The Contractor agrees to list all employment openings existing at contract award or occurring during contract performance, at an appropriate office of the State employment service system in the locality where the opening occurs. These openings include those occurring at any Contractor facility, including one not connected with performing this contract. An independent corporate affiliate is exempt from this requirement.

(2) State and local government agencies holding Federal contracts of $10,000 or more shall also list all their employment openings with the appropriate office of the State employment service.

(3) The listing of employment openings with the State employment service system is required at least concurrently with using any other recruitment source or effort and involves the obligations of placing a bona fide job order, including accepting referrals of veterans and nonveterans. This listing does not require hiring any particular job applicant or hiring from any particular group of job applicants and is not intended to relieve the Contractor from any requirements of Executive orders or regulations concerning nondiscrimination in employment.

(4) Whenever the Contractor becomes contractually bound to the listing terms of this clause, it shall advise the State employment service system, in each State where it has establishments, of the name and location of each hiring location in the State. As long as the Contractor is contractually bound to these terms and has so advised the State system, it need not advise the State system of subsequent contracts. The Contractor may advise the State system when it is no longer bound by this contract clause.

(d) Applicability. This clause does not apply to the listing of employment openings that occur and are filled outside the 50 States, the District of Columbia, the Commonwealth of Puerto Rico, Guam, and the Virgin Islands.

(e) Postings. (1) The Contractor agrees to post employment notices stating (i) the Contractor's obligation under the law to take affirmative action to employ and advance in employment qualified disabled veterans and veterans of the Vietnam era, and (ii) the rights of applicants and employees.

(2) These notices shall be posted in conspicuous places that are available to employees and applicants for employment. They shall be in a form prescribed by the Deputy Assistant Secretary for Federal Contract Compliance Programs, Department of Labor (Deputy Assistant Secretary), and provided by or through the Contracting Officer.

(3) The Contractor shall notify each labor union or representative of workers with which it has a collective bargaining agreement or other contract understanding, that the Contractor is bound by the terms of the Act, and is committed to take affirmative action to employ, and advance in employment, qualified disabled veterans and veterans of the Vietnam Era.

(f) Noncompliance. If the Contractor does not comply with the requirements of this clause, appropriate actions may be taken under the rules, regulations, and relevant orders of the Secretary issued pursuant to the Act.

(g) Subcontracts. The Contractor shall include the terms of this clause in every subcontract or purchase order of $10,000 or more unless exempted by rules, regulations, or orders of the Secretary. The Contractor shall act as specified by the Deputy Assistant Secretary to enforce the terms, including action for noncompliance.

(End of clause)

52.222-36 AFFIRMATIVE ACTION FOR WORKERS WITH DISABILITIES (JUN 1998)

(a) General. (1) Regarding any position for which the employee or applicant for employment is qualified, the Contractor shall not discriminate against any employee or applicant because of physical or mental disability. The Contractor agrees to take affirmative action to employ, advance in employment, and otherwise treat qualified individuals with disabilities without discrimination based upon their physical or mental disability in all employment practices such as--

(i) Recruitment, advertising, and job application procedures;

(ii) Hiring, upgrading, promotion, award of tenure, demotion, transfer, layoff, termination, right of return from layoff, and rehiring;

(iii) Rates of pay or any other form of compensation and changes in compensation;

(iv) Job assignments, job classifications, organizational structures, position descriptions, lines of progression, and seniority lists;

(v) Leaves of absence, sick leave, or any other leave;

(vi) Fringe benefits available by virtue of employment, whether or not administered by the Contractor;

(vii) Selection and financial support for training, including apprenticeships, professional meetings, conferences, and other related activities, and selection for leaves of absence to pursue training;

(viii) Activities sponsored by the Contractor, including social or recreational programs; and

(ix) Any other term, condition, or privilege of employment.

(2) The Contractor agrees to comply with the rules, regulations, and relevant orders of the Secretary of Labor (Secretary) issued under the Rehabilitation Act of 1973 (29 U.S.C. 793) (the Act), as amended.

(b) Postings. (1) The Contractor agrees to post employment notices stating--

(i) The Contractor's obligation under the law to take affirmative action to employ and advance in employment qualified individuals with disabilities; and

(ii) The rights of applicants and employees.

(2) These notices shall be posted in conspicuous places that are available to employees and applicants for employment. The Contractor shall ensure that applicants and employees with disabilities are informed of the contents of the notice (e.g., the Contractor may have the notice read to a visually disabled individual, or may lower the posted notice so that it might be read by a person in a wheelchair). The notices shall be in a form prescribed by the Deputy Assistant Secretary for Federal Contract Compliance of the U.S. Department of Labor (Deputy Assistant Secretary) and shall be provided by or through the Contracting Officer.

(3) The Contractor shall notify each labor union or representative of workers with which it has a collective bargaining agreement or other contract understanding, that the Contractor is bound by the terms of Section 503 of the Act and is committed to take affirmative action to employ, and advance in employment, qualified individuals with physical or mental disabilities.

(c) Noncompliance. If the Contractor does not comply with the requirements of this clause, appropriate actions may be taken under the rules, regulations, and relevant orders of the Secretary issued pursuant to the Act.

(d) Subcontracts. The Contractor shall include the terms of this clause in every subcontract or purchase order in excess of $10,000 unless exempted by rules, regulations, or orders of the Secretary. The Contractor shall act as specified by the Deputy Assistant Secretary to enforce the terms, including action for noncompliance.

(End of clause)

52.222-37 EMPLOYMENT REPORTS ON DISABLED VETERANS AND VETERANS OF THE VIETNAM ERA (JAN 1999)

(a) Unless the Contractor is a State or local government agency, the Contractor shall report at least annually, as required by the Secretary of Labor, on--

(1) The number of disabled veterans and the number of veterans of the Vietnam era in the workforce of the contractor by job category and hiring location; and

(2) The total number of new employees hired during the period covered by the report, and of that total, the number of disabled veterans, and the number of veterans of the Vietnam era.

(b) The above items shall be reported by completing the form entitled "Federal Contractor Veterans' Employment Report VETS-100."

(c) Reports shall be submitted no later than September 30 of each year beginning September 30, 1988.

(d) The employment activity report required by paragraph (a)(2) of this clause shall reflect total hires during the most recent 12-month period as of the ending date selected for the employment profile report required by paragraph (a)(1) of this clause. Contractors may select an ending date: (1) As of the end of any pay period during the period January through March 1st of the year the report is due, or (2) as of December 31, if the contractor has previous written approval from the Equal Employment Opportunity Commission to do so for purposes of submitting the Employer Information Report EEO-1 (Standard Form 100).

(e) The count of veterans reported according to paragraph (a) of this clause shall be based on voluntary disclosure. Each Contractor subject to the reporting requirements at 38 U.S.C. 4212 shall invite all disabled veterans and veterans of the Vietnam era who wish to benefit under the affirmative action program at 38 U.S.C. 4212 to identify themselves to the Contractor. The invitation shall state that the information is voluntarily provided; that the information will be kept confidential; that disclosure or refusal to provide the information will not subject the applicant or employee to any adverse treatment; and that the information will be used only in accordance with the regulations promulgated under 38 U.S.C. 4212.

(f) Subcontracts. The Contractor shall include the terms of this clause in every subcontract or purchase order of $10,000 or more unless exempted by rules, regulations, or orders of the Secretary.

(End of clause)

52.223-3 HAZARDOUS MATERIAL IDENTIFICATION AND MATERIAL SAFETY DATA (JAN 1997)

(a) "Hazardous material", as used in this clause, includes any material defined as hazardous under the latest version of Federal Standard No. 313 (including revisions adopted during the term of the contract).

(b) The offeror must list any hazardous material, as defined in paragraph (a) of this clause, to be delivered under this contract. The hazardous material shall be properly identified and include any applicable identification number, such as National Stock Number or Special Item Number. This information shall also be included on the Material Safety Data Sheet submitted under this contract.

Material (If none, insert "None")	Identification No.
_____	_____
_____	_____
_____	_____

(c) This list must be updated during performance of the contract whenever the Contractor determines that any other material to be delivered under this contract is hazardous.

(d) The apparently successful offeror agrees to submit, for each item as required prior to award, a Material Safety Data Sheet, meeting the requirements of 29 CFR 1910.1200(g) and the latest version of Federal Standard No. 313, for all hazardous material identified in paragraph (b) of this clause. Data shall be submitted in accordance with Federal Standard No. 313, whether or not the apparently successful offeror is the actual manufacturer of these items. Failure to submit the Material Safety Data Sheet prior to award may result in the apparently successful offeror being considered nonresponsible and ineligible for award.

(e) If, after award, there is a change in the composition of the item(s) or a revision to Federal Standard No. 313, which renders incomplete or inaccurate the data submitted under paragraph (d) of this clause, the Contractor shall promptly notify the Contracting Officer and resubmit the data.

(f) Neither the requirements of this clause nor any act or failure to act by the Government shall relieve the Contractor of any responsibility or liability for the safety of Government, Contractor, or subcontractor personnel or property.

(g) Nothing contained in this clause shall relieve the Contractor from complying with applicable Federal, State, and local laws, codes, ordinances, and regulations (including the obtaining of licenses and permits) in connection with hazardous material.

(h) The Government's rights in data furnished under this contract with respect to hazardous material are as follows:

(1) To use, duplicate and disclose any data to which this clause is applicable. The purposes of this right are to--

(i) Apprise personnel of the hazards to which they may be exposed in using, handling, packaging, transporting, or disposing of hazardous materials;

(ii) Obtain medical treatment for those affected by the material; and

(iii) Have others use, duplicate, and disclose the data for the Government for these purposes.

(2) To use, duplicate, and disclose data furnished under this clause, in accordance with subparagraph (h)(1) of this clause, in precedence over any other clause of this contract providing for rights in data.

(3) The Government is not precluded from using similar or identical data acquired from other sources.

(End of clause)

52.223-6 DRUG-FREE WORKPLACE (JAN 1997)

(a) Definitions. As used in this clause --

"Controlled substance" means a controlled substance in schedules I through V of section 202 of the Controlled Substances Act (21 U.S.C. 812) and as further defined in regulation at 21 CFR 1308.11 - 1308.15.

"Conviction" means a finding of guilt (including a plea of nolo contendere) or imposition of sentence, or both, by any judicial body charged with the responsibility to deter- mine violations of the Federal or State criminal drug statutes.

"Criminal drug statute" means a Federal or non-Federal criminal statute involving the manufacture, distribution, dispensing, possession, or use of any controlled substance.

"Drug-free workplace" means the site(s) for the performance of work done by the Contractor in connection with a specific contract at which employees of the Contractor are prohibited from engaging in the unlawful manufacture, distribution, dispensing, possession, or use of a controlled substance.

"Employee" means an employee of a Contractor directly engaged in the performance of work under a Government contract. "Directly engaged" is defined to include all direct cost employees and any other Contractor employee who has other than a minimal impact or involvement in contract performance.

"Individual" means an offeror/contractor that has no more than one employee including the offeror/contractor.

(b) The Contractor, if other than an individual, shall-- within 30 days after award (unless a longer period is agreed to in writing for contracts of 30 days or more performance duration), or as soon as possible for contracts of less than 30 days performance duration--

(1) Publish a statement notifying its employees that the unlawful manufacture, distribution, dispensing, possession, or use of a controlled substance is prohibited in the Contractor's workplace and specifying the actions that will be taken against employees for violations of such

prohibition;

(2) Establish an ongoing drug-free awareness program to inform such employees about--

(i) The dangers of drug abuse in the workplace;

(ii) The Contractor's policy of maintaining a drug-free workplace;

(iii) Any available drug counseling, rehabilitation, and employee assistance programs; and

(iv) The penalties that may be imposed upon employees for drug abuse violations occurring in the workplace;

(3) Provide all employees engaged in performance of the contract with a copy of the statement required by subparagraph (b)(1) of this clause;

(4) Notify such employees in writing in the statement required by subparagraph (b)(1) of this clause that, as a condition of continued employment on this contract, the employee will--

(i) Abide by the terms of the statement; and

(ii) Notify the employer in writing of the employee's conviction under a criminal drug statute for a violation occurring in the workplace no later than 5 days after such conviction.

(5) Notify the Contracting Officer in writing within 10 days after receiving notice under subdivision (b)(4)(ii) of this clause, from an employee or otherwise receiving actual notice of such conviction. The notice shall include the position title of the employee;

(6) Within 30 days after receiving notice under subdivision (b)(4)(ii) of this clause of a conviction, take one of the following actions with respect to any employee who is convicted of a drug abuse violation occurring in the workplace:

(i) Taking appropriate personnel action against such employee, up to and including termination; or

(ii) Require such employee to satisfactorily participate in a drug abuse assistance or rehabilitation program approved for such purposes by a Federal, State, or local health, law enforcement, or other appropriate agency; and

(7) Make a good faith effort to maintain a drug-free workplace through implementation of subparagraphs (b)(1) though (b)(6) of this clause.

(c) The Contractor, if an individual, agrees by award of the contract or acceptance of a purchase order, not to engage in the unlawful manufacture, distribution, dispensing, possession, or use of a controlled substance while performing this contract.

(d) In addition to other remedies available to the Government, the Contractor's failure to comply with the requirements of paragraph (b) or (c) of this clause may, pursuant to FAR 23.506, render the Contractor subject to suspension of contract payments, termination of the contract for default, and suspension or debarment.

(End of clause)

52.223-14 TOXIC CHEMICAL RELEASE REPORTING (OCT 2000)

(a) Unless otherwise exempt, the Contractor, as owner or operator of a facility used in the performance of this contract, shall file by July 1 for the prior calendar year an annual Toxic Chemical Release Inventory Form (Form R) as described in sections 313(a) and (g) of the Emergency Planning and Community Right-to-Know Act of 1986 (EPCRA) (42 U.S.C. 11023(a) and (g)), and section 6607 of the Pollution Prevention Act of 1990 (PPA) (42 U.S.C. 13106). The Contractor shall file, for each facility subject to the Form R filing and reporting requirements, the annual Form R throughout the life of the contract.

(b) A Contractor owned or operated facility used in the performance of this contract is exempt from the requirement to file an annual Form R if--

(1) The facility does not manufacture, process, or otherwise use any toxic chemicals listed under section 313(c) of EPCRA, 42 U.S.C. 11023(c);

(2) The facility does not have 10 or more full-time employees as specified in section 313(b)(1)(A) of EPCRA, 42 U.S.C. 11023(b)(1)(A);

(3) The facility does not meet the reporting thresholds of toxic chemicals established under of EPCRA, 42 U.S.C. 11023(f) (including the alternate thresholds at 40 CFR 372.27, provided an appropriate certification form has been filed with EPA);

(4) The facility does not fall within Standard Industrial Classification Code (SIC) major groups 20 through 39 or their corresponding North American Industry Classification System (NAICS) sectors 31 through 33; or

(5) The facility is not located within any State of the United States, the District of Columbia, the Commonwealth of Puerto Rico, Guam, American Samoa, the United States Virgin Islands, the Northern Mariana Islands, or any other territory or possession over which the United States has jurisdiction.

(c) If the Contractor has certified to an exemption in accordance with one or more of the criteria in paragraph (b) of this clause, and after award of the contract circumstances change so that any of its owned or operated facilities used in the performance of this contract is no longer exempt--

(1) The Contractor shall notify the Contracting Officer; and

(2) The Contractor, as owner or operator of a facility used in the performance of this contract that is no longer exempt, shall (i) submit a Toxic Chemical Release Inventory Form (Form R) on or before July 1 for the prior calendar year during which the facility becomes eligible; and (ii) continue to file the annual Form R for the life of the contract for such facility.

(d) The Contracting Officer may terminate this contract or take other action as appropriate, if the Contractor fails to comply accurately and fully with the EPCRA and PPA toxic chemical release filing and reporting requirements.

(e) Except for acquisitions of commercial items, as defined in FAR Part 2, the Contractor shall--

(1) For competitive subcontracts expected to exceed $100,000 (including all options), include a solicitation provision substantially the same as the provision at FAR 52.223-13, Certification of Toxic Chemical Release Reporting; and

(2) Include in any resultant subcontract exceeding $100,000 (including all options), the substance of this clause, except this paragraph (e).

52.225-5 TRADE AGREEMENTS (APR 2000)

(a) Definitions. As used in this clause.

Caribbean Basin country means any of the following countries: Antigua and Barbuda, Aruba, Bahamas, Barbados, Belize, British Virgin Islands, Costa Rica, Dominica, El Salvador, Grenada, Guatemala, Guyana, Haiti, Jamaica, Montserrat, Netherlands Antilles, Nicaragua, Panama, St. Kitts and Nevis, St. Lucia, St. Vincent and the Grenadines, Trinidad and Tobago.

Caribbean Basin country end product means an article that--

(1) Is wholly the growth, product, or manufacture of a Caribbean Basin country; or

(2) In the case of an article that consists in whole or in part of materials from another country, has been substantially transformed in a Caribbean Basin country into a new and different article of commerce with a name, character, or use distinct from that of the article or articles from which it was transformed. The term refers to a product offered for purchase under a supply contract, but for purposes of calculating the value of the end product includes services (except transportation services) incidental to the article, provided that the value of those incidental services does not exceed that of the article itself. The term excludes products that are excluded from duty-free treatment for Caribbean countries under 19 U.S.C. 2703(b), which presently are--

(i) Textiles and apparel articles that are subject to textile agreements;

(ii) Footwear, handbags, luggage, flat goods, work gloves, and leather wearing apparel not designated as eligible articles for the purpose of the Generalized System of Preferences under Title V of the Trade Act of 1974;

(iii) Tuna, prepared or preserved in any manner in airtight containers;

(iv) Petroleum, or any product derived from petroleum; and

(v) Watches and watch parts (including cases, bracelets, and straps) of whatever type including, but not limited to, mechanical, quartz digital, or quartz analog, if such watches or watch parts contain any material that is the product of any country to which the Harmonized Tariff Schedule of the United States (HTSUS) column 2 rates of duty apply.

Designated country means any of the following countries: Aruba, Austria, Bangladesh Belgium, Benin, Bhutan, Botswana, Burkina Faso, Burundi, Canada, Cape Verde, Central African Republic, Chad, Comoros, Denmark, Djibouti, Equatorial Guinea.

Finland, France, Gambia, Germany, Greece, Guinea, Guinea-Bissau, Haiti, Hong Kong, Ireland, Israel, Italy, Japan.

Kiribati, Korea, Republic of Lesotho, Liechtenstein, Luxembourg, Malawi, Maldives, Mali, Mozambique, Nepal, Netherlands, Niger, Norway, Portugal, Rwanda.

Sao Tome and Principe, Sierra Leone, Singapore, Somalia, Spain, Sweden, Switzerland, Tanzania U.R., Togo, Tuvalu, Uganda, United Kingdom, Vanuatu, Western Samoa, Yemen.

Designated country end product means an article that--

(1) Is wholly the growth, product, or manufacture of a designated country; or

(2) In the case of an article that consists in whole or in part of materials from another country, has been substantially transformed in a designated country into a new and different article of commerce with a name, character, or use distinct from that of the article or articles from which it was transformed. The term refers to a product offered for purchase under a supply contract, but for purposes of calculating the value of the end product includes services, (except transportation services) incidental to the article, provided that the value of those incidental services does not exceed that of the article itself.

End product means supplies delivered under a line item of a Government contract.

North American Free Trade Agreement country means Canada or Mexico.

North American Free Trade Agreement country end product means an article that--

(1) Is wholly the growth, product, or manufacture of a North American Free Trade Agreement (NAFTA) country; or

(2) In the case of an article that consists in whole or in part of materials from another country, has been substantially transformed in a NAFTA country into a new and different article of commerce with a name, character, or use distinct from that of the article or articles from which it was transformed. The term refers to a product offered for purchase under a supply contract, but for purposes of calculating the value of the end product includes services, (except transportation services) incidental to the article, provided that the value of those incidental services does not exceed that of the article itself.

United States means the 50 States and the District of Columbia, U.S. territories and possessions, Puerto Rico, the Northern Mariana Islands, and any other place subject to U.S. jurisdiction, but does not include leased bases.

U.S.-made end product means an article that is mined, produced, or manufactured in the United States or that is substantially transformed in the United States into a new and different article of commerce with a name, character, or use distinct from that of the article or articles from which it was transformed.,

(b) Implementation. This clause implements the Trade, Agreements Act (19 U.S.C. 2501, et seq.) and the North American Free Trade Agreement Implementation Act of 1993, (NAFTA) (19 U.S.C. 3301 note), by restricting the acquisition of end products that are not U.S.-made, designated country, Caribbean Basin country, or NAFTA country end products.,

(c) Delivery of end products. The Contracting Officer has determined that the Trade Agreements Act and NAFTA apply to this acquisition. Unless otherwise specified, these trade agreements apply to all items in the Schedule. The Contractor shall deliver under this contract only U.S.-made, designated country, Caribbean Basin country, or NAFTA country end products except to the extent that, in its offer, it specified delivery of other end products in the provision entitled "Trade Agreements Certificate."

(End of clause)

52.225-9 BUY AMERICAN ACT--BALANCE OF PAYMENTS PROGRAM—CONSTRUCTION MATERIALS (FEB 2000)

(a) Definitions. As used in this clause--

Component means any article, material, or supply incorporated directly into construction materials.

Construction material means an article, material, or supply brought to the construction site by the Contractor or a subcontractor for incorporation into the building or work. The term also includes an item brought to the site pre-assembled from articles, materials, or supplies. However, emergency life safety systems, such as emergency lighting, fire alarm, and audio evacuation

systems, that are discrete systems incorporated into a public building or work and that are produced as complete systems, are evaluated as a single and distinct construction material regardless of when or how the individual parts or components of those systems are delivered to the construction site. Materials purchased directly by the Government are supplies, not construction material.

Cost of components means--

(1) For components purchased by the Contractor, the acquisition cost, including transportation costs to the place of incorporation into the end product (whether or not such costs are paid to a domestic firm), and any applicable duty (whether or not a duty-free entry certificate is issued); or

(2) For components manufactured by the Contractor, all costs associated with the manufacture of the component, including transportation costs as described in paragraph (1) of this definition, plus allocable overhead costs, but excluding profit. Cost of components does not include any costs associated with the
manufacture of the end product.

Domestic construction material means--

(1) An unmanufactured construction material mined or produced in the United States; or

(2) A construction material manufactured in the United States, if the cost of its components mined, produced, or manufactured in the United States exceeds 50 percent of the cost of all its components. Components of foreign origin of the same class or kind for which nonavailability determinations have been made are treated as domestic.

Foreign construction material means a construction material other than a domestic construction material.

United States means the 50 States and the District of Columbia, U.S. territories and possessions, Puerto Rico, the Northern Mariana Islands, and any other place subject to U.S. jurisdiction, but does not include leased bases.

(b) Domestic preference. (1) This clause implements the Buy American Act (41 U.S.C. 10a-10d) and the Balance of Payments Program by providing a preference for domestic construction material. The Contractor shall use only domestic construction material in performing this contract, except as provided in paragraphs (b)(2) and (b)(3) of this clause.

(2) This requirement does not apply to the construction material or components listed by the Government as follows: none

(3) The Contracting Officer may add other foreign construction material to the list in paragraph (b)(2) of this clause if the Government determines that

(i) The cost of domestic construction material would be unreasonable. The cost of a particular domestic construction material subject to the requirements of the Buy American Act is unreasonable when the cost of such material exceeds the cost of foreign material by more than 6 percent. For determination of unreasonable cost under the Balance of Payments Program, the Contracting Officer will use a factor of 50 percent;

(ii) The application of the restriction of the Buy American Act or Balance of Payments Program to a particular construction material would be impracticable or inconsistent with the public interest; or

(iii) The construction material is not mined, produced, or manufactured in the United States in sufficient and reasonably available commercial quantities of a satisfactory quality.

(c) Request for determination of inapplicability of the Buy American Act or Balance of Payments Program. (1)(i) Any Contractor request to use foreign construction material in accordance with paragraph (b)(3) of this clause shall include adequate information for Government evaluation of the request, including--

(A) A description of the foreign and domestic construction materials;

(B) Unit of measure;

(C) Quantity;

(D) Price;

(E) Time of delivery or availability;

(F) Location of the construction project;

(G) Name and address of the proposed supplier; and

(H) A detailed justification of the reason for use of foreign construction materials cited in accordance with paragraph (b)(3) of this clause.

(ii) A request based on unreasonable cost shall include a reasonable survey of the market and a completed price comparison table in the format in paragraph (d) of this clause.

(iii) The price of construction material shall include all delivery costs to the construction site and any applicable duty (whether or not a duty-free certificate may be issued).

(iv) Any Contractor request for a determination submitted after contract award shall explain why the Contractor could not reasonably foresee the need for such determination and could not have requested the determination before contract award. If the Contractor does not submit a satisfactory explanation, the Contracting Officer need not make a determination.

(2) If the Government determines after contract award that an exception to the Buy American Act or Balance of Payments Program applies and the Contracting Officer and the Contractor negotiate adequate consideration, the Contracting Officer will modify the contract to allow use of the foreign construction material. However, when the basis for the exception is the unreasonable price of a domestic construction material, adequate consideration is not less than the differential established in paragraph (b)(3)(i) of this clause.

(3) Unless the Government determines that an exception to the Buy American Act or Balance of Payments Program applies, use of foreign construction material is noncompliant with the Buy American Act or Balance of Payments Program.

(d) Data. To permit evaluation of requests under paragraph (c) of this clause based on unreasonable cost, the Contractor shall include the following information and any applicable supporting data based on the survey of suppliers:

Foreign and Domestic Construction Materials Price Comparison

Construction material description	Unit of measure	Quantity	Price (dollars) \1\
Item 1			
Foreign construction material....	.....	.....	.....
Domestic construction material...	.....	.....	.....
Item 2			
Foreign construction material....	.....	.....	.....
Domestic construction material...	.....	.....	.....

Include all delivery costs to the construction site and any applicable duty (whether or not a duty-free entry certificate is issued).

List name, address, telephone number, and contact for suppliers surveyed. Attach copy of response; if oral, attach summary.

Include other applicable supporting information.

(End of clause)

52.225-13 RESTRICTIONS ON CERTAIN FOREIGN PURCHASES (JUL 2000)

(a) The Contractor shall not acquire, for use in the performance of this contract, any supplies or services originating from sources within, or that were located in or transported from or through, countries whose products are banned from importation into the United States under regulations of the Office of Foreign Assets Control, Department of the Treasury. Those countries are Cuba, Iran, Iraq, Libya, North Korea, Sudan, the territory of Afghanistan controlled by the Taliban, and Serbia (excluding the territory of Kosovo).

(b) The Contractor shall not acquire for use in the performance of this contract any supplies or services from entities controlled by the government of Iraq.

(c) The Contractor shall insert this clause, including this paragraph (c), in all subcontracts.

(End of clause)

52.225-15 SANCTIONED EUROPEAN UNION COUNTRY END PRODUCTS (FEB 2000)

(a) Definitions. As used in this clause--

Sanctioned European Union country end product means an article that--

(1) Is wholly the growth, product, or manufacture of a sanctioned European Union (EU) member state; or

(2) In the case of an article that consists in whole or in part of materials from another country, has been substantially transformed in a sanctioned EU member state into a new and different article of commerce with a name, character, or use distinct from that of the article or articles from which it was transformed. The term refers to a product offered for purchase under a supply contract, but for purposes of calculating the value of the end product includes services (except transportation services) incidental to the article, provided that the value of those incidental services does not exceed that of the article itself.

Sanctioned European Union member state means Austria, Belgium, Denmark, Finland, France, Ireland, Italy, Luxembourg, the Netherlands, Sweden, or the United Kingdom.

(b) The Contractor shall not deliver any sanctioned European Union country end products under this contract.

(End of clause)

52.227-1 AUTHORIZATION AND CONSENT (JUL 1995)

(a) The Government authorizes and consents to all use and manufacture, in performing this contract or any subcontract at any tier, of any invention described in and covered by a United States patent (1) embodied in the structure or composition of any article the delivery of which is accepted by the Government under this contract or (2) used in machinery, tools, or methods whose use necessarily results from compliance by the Contractor or a subcontractor with (i) specifications or written provisions forming a part of this contract or (ii) specific written instructions given by the Contracting Officer directing the manner of performance. The entire

liability to the Government for infringement of a patent of the United States shall be determined solely by the provisions of the indemnity clause, if any, included in this contract or any subcontract hereunder (including any lower-tier subcontract), and the Government assumes liability for all other infringement to the extent of the authorization and consent hereinabove granted.

(b) The Contractor agrees to include, and require inclusion of, this clause, suitably modified to identify the parties, in all subcontracts at any tier for supplies or services (including construction, architect-engineer services, and materials, supplies, models, samples, and design or testing services expected to exceed the simplified acquisition threshold (however, omission of this clause from any subcontract, including those at or below the simplified acquisition threshold, does not affect this authorization and consent.)

52.227-2 NOTICE AND ASSISTANCE REGARDING PATENT AND COPYRIGHT INFRINGEMENT (AUG 1996)

(a) The Contractor shall report to the Contracting Officer, promptly and in reasonable written detail, each notice or claim of patent or copyright infringement based on the performance of this contract of which the Contractor has knowledge.

(b) In the event of any claim or suit against the Government on account of any alleged patent or copyright infringement arising out of the performance of this contract or out of the use of any supplies furnished or work or services performed under this contract, the Contractor shall furnish to the Government, when requested by the Contracting Officer, all evidence and information in possession of the Contractor pertaining to such suit or claim. Such evidence and information shall be furnished at the expense of the Government except where the Contractor has agreed to indemnify the Government.

(c) The Contractor agrees to include, and require inclusion of, this clause in all subcontracts at any tier for supplies or services (including construction and architect-engineer subcontracts and those for material, supplies, models, samples, or design or testing services) expected to exceed the simplified acquisition threshold at (FAR) 2.101.to exceed the dollar amount set forth in 13.000 of the Federal Acquisition Regulation (FAR).

(End of clause)

52.227-4 PATENT INDEMNITY--CONSTRUCTION CONTRACTS (APR 1984)

Except as otherwise provided, the Contractor agrees to indemnify the Government and its officers, agents, and employees against liability, including costs and expenses, for infringement upon any United States patent (except a patent issued upon an application that is now or may hereafter be withheld from issue pursuant to a Secrecy Order under 35 U.S.C. 181) arising out of performing this contract or out of the use or disposal by or for the account of the Government of

supplies furnished or work performed under this contract.

52.228-2 ADDITIONAL BOND SECURITY (OCT 1997)

The Contractor shall promptly furnish additional security required to protect the Government and persons supplying labor or materials under this contract if--

(a) Any surety upon any bond, or issuing financial institution for other security, furnished with this contract becomes unacceptable to the Government.

(b) Any surety fails to furnish reports on its financial condition as required by the Government;

(c) The contract price is increased so that the penal sum of any bond becomes inadequate in the opinion of the Contracting Officer; or

(d) An irrevocable letter of credit (ILC) used as security will expire before the end of the period of required security. If the Contractor does not furnish an acceptable extension or replacement ILC, or other acceptable substitute, at least 30 days before an ILC's scheduled expiration, the Contracting officer has the right to immediately draw on the ILC.

52.228-11 PLEDGES OF ASSETS (FEB 1992)

(a) Offerors shall obtain from each person acting as an individual surety on a bid guarantee, a performance bond, or a payment bond--

(1) Pledge of assets; and

(2) Standard Form 28, Affidavit of Individual Surety.

(b) Pledges of assets from each person acting as an individual surety shall be in the form of--

(1) Evidence of an escrow account containing cash, certificates of deposit, commercial or Government securities, or other assets described in FAR 28.203-2 (except see 28.203-2(b)(2) with respect to Government securities held in book entry form) and/or;

(2) A recorded lien on real estate. The offeror will be required to provide--

(i) Evidence of title in the form of a certificate of title prepared by a title insurance company approved by the United States Department of Justice. This title evidence must show fee simple title vested in the surety along with any concurrent owners; whether any real estate taxes are due and payable; and any recorded encumbrances against the property, including the lien filed in favor of the Government as required by FAR 28.203-3(d);

(ii) Evidence of the amount due under any encumbrance shown in the evidence of title;

(iii) A copy of the current real estate tax assessment of the property or a current appraisal dated no earlier than 6 months prior to the date of the bond, prepared by a professional appraiser who certifies that the appraisal has been conducted in accordance with the generally accepted appraisal standards as reflected in the Uniform Standards of Professional Appraisal Practice, as promulgated by the Appraisal Foundation.

(End of clause)

52.228-12 PROSPECTIVE SUBCONTRACTOR REQUESTS FOR BONDS (OCT 1995)

In accordance with Section 806(a)(3) of Pub. L. 102-190, as amended by Sections 2091 and 8105 of Pub. L. 103-355, upon the request of a prospective subcontractor or supplier offering to furnish labor or material for the performance of this contract for which a payment bond has been furnished to the Government pursuant to the Miller Act, the Contractor shall promptly provide a copy of such payment bond to the requester.

52.228-14 IRREVOCABLE LETTER OF CREDIT (DEC 1999)

(a) “Irrevocable letter of credit” (ILC), as used in this clause, means a written commitment by a federally insured financial institution to pay all or part of a stated amount of money, until the expiration date of the letter, upon presentation by the Government (the beneficiary) of a written demand therefor. Neither the financial institution nor the offeror/Contractor can revoke or condition the letter of credit.

(b) If the offeror intends to use an ILC in lieu of a bid bond, or to secure other types of bonds such as performance and payment bonds, the letter of credit and letter of confirmation formats in paragraphs (e) and (f) of this clause shall be used.

(c) The letter of credit shall be irrevocable, shall require presentation of no document other than a written demand and the ILC (including confirming letter, if any), shall be issued/confirmed by an acceptable federally insured financial institution as provided in paragraph (d) of this clause, and--

(1) If used as a bid guarantee, the ILC shall expire no earlier than 60 days after the close of the bid acceptance period;

(2) If used as an alternative to corporate or individual sureties as security for a performance or payment bond, the offeror/Contractor may submit an ILC with an initial expiration date estimated to cover the entire period for which financial security is required or may submit an ILC

with an initial expiration date that is a minimum period of one year from the date of issuance. The ILC shall provide that, unless the issuer provides the beneficiary written notice of non-renewal at least 60 days in advance of the current expiration date, the ILC is automatically extended without amendment for one year from the expiration date, or any future expiration date, until the period of required coverage is completed and the Contracting Officer provides the financial institution with a written statement waiving the right to payment. The period of required coverage shall be:

(i) For contracts subject to the Miller Act, the later of--

(A) One year following the expected date of final payment;

(B) For performance bonds only, until completion of any warranty period; or

(C) For payment bonds only, until resolution of all claims filed against the payment bond during the one-year period following final payment.

(ii) For contracts not subject to the Miller Act, the later of--

(A) 90 days following final payment; or

(B) For performance bonds only, until completion of any warranty period.

(d) Only federally insured financial institutions rated investment grade or higher shall issue or confirm the ILC. The offeror/Contractor shall provide the Contracting Officer a credit rating that indicates the financial institution has the required rating(s) as of the date of issuance of the ILC. Unless the financial institution issuing the ILC had letter of credit business of less than $25 million in the past year, ILCs over $5 million must be confirmed by another acceptable financial institution that had letter of credit business of less than $25 million in the past year.

(e) The following format shall be used by the issuing financial institution to create an ILC:

_____

[Issuing Financial Institution's Letterhead or Name and Address]

Issue Date _____

IRREVOCABLE LETTER OF CREDIT NO. _____

Account party's name _____

Account party's address _____

For Solicitation No. _____(for reference only)

TO: [U.S. Government agency]

[U.S. Government agency's address]

1. We hereby establish this irrevocable and transferable Letter of Credit in your favor for one or more drawings up to United States $_____. This Letter of Credit is payable at [issuing financial institution's and, if any, confirming financial institution's] office at [issuing financial institution's address and, if any, confirming financial institution's address] and expires with our close of business on _____, or any automatically extended expiration date.

2. We hereby undertake to honor your or the transferee's sight draft(s) drawn on the issuing or, if any, the confirming financial institution, for all or any part of this credit if presented with this Letter of Credit and confirmation, if any, at the office specified in paragraph 1 of this Letter of Credit on or before the expiration date or any automatically extended expiration date.

3. [This paragraph is omitted if used as a bid guarantee, and subsequent paragraphs are renumbered.] It is a condition of this Letter of Credit that it is deemed to be automatically extended without amendment for one year from the expiration date hereof, or any future expiration date, unless at least 60 days prior to any expiration date, we notify you or the transferee by registered mail, or other receipted means of delivery, that we elect not to consider this Letter of Credit renewed for any such additional period. At the time we notify you, we also agree to notify the account party (and confirming financial institution, if any) by the same means of delivery.

4. This Letter of Credit is transferable. Transfers and assignments of proceeds are to be effected without charge to either the beneficiary or the transferee/assignee of proceeds. Such transfer or assignment shall be only at the written direction of the Government (the beneficiary) in a form satisfactory to the issuing financial institution and the confirming financial institution, if any.

5. This Letter of Credit is subject to the Uniform Customs and Practice (UCP) for Documentary Credits, 1993 Revision, International Chamber of Commerce Publication No. 500, and to the extent not inconsistent therewith, to the laws of _____ [state of confirming financial institution, if any, otherwise state of issuing financial institution].

6. If this credit expires during an interruption of business of this financial institution as described in Article 17 of the UCP, the financial institution specifically agrees to effect payment if this credit is drawn against within 30 days after the resumption of our business.

Sincerely,

_____

[Issuing financial institution]

(f) The following format shall be used by the financial institution to confirm an ILC:

_____
[Confirming Financial Institution's Letterhead or Name and Address]

(Date) _____

Our Letter of Credit Advice Number _____

Beneficiary: _____ [U.S. Government agency]

Issuing Financial Institution: _____

Issuing Financial Institution's LC No.: _____

Gentlemen:

1. We hereby confirm the above indicated Letter of Credit, the original of which is attached, issued by _____ [name of issuing financial institution] for drawings of up to United States dollars _____/U.S. $_____ and expiring with our close of business on _____ [the expiration date], or any automatically extended expiration date.

2. Draft(s) drawn under the Letter of Credit and this Confirmation are payable at our office located at _____.

3. We hereby undertake to honor sight draft(s) drawn under and presented with the Letter of Credit and this Confirmation at our offices as specified herein.

4. [This paragraph is omitted if used as a bid guarantee, and subsequent paragraphs are renumbered.] It is a condition of this confirmation that it be deemed automatically extended without amendment for one year from the expiration date hereof, or any automatically extended expiration date, unless:

(a) At least 60 days prior to any such expiration date, we shall notify the Contracting Officer, or the transferee and the issuing financial institution, by registered mail or other receipted means of delivery, that we elect not to consider this confirmation extended for any such additional period; or

(b) The issuing financial institution shall have exercised its right to notify you or the transferee, the account party, and ourselves, of its election not to extend the expiration date of the Letter of Credit.

5. This confirmation is subject to the Uniform Customs and Practice (UCP) for Documentary Credits, 1993 Revision, International Chamber of Commerce Publication No. 500, and to the extent not inconsistent therewith, to the laws of _____ [state of confirming financial institution].

6. If this confirmation expires during an interruption of business of this financial institution as

described in Article 17 of the UCP, we specifically agree to effect payment if this credit is drawn against within 30 days after the resumption of our business.

Sincerely,

_____

[Confirming financial institution]

(g) The following format shall be used by the Contracting Officer for a sight draft to draw on the Letter of Credit:

SIGHT DRAFT

_____

[City, State]

(Date) _____

[Name and address of financial institution]

Pay to the order of _____ [Beneficiary Agency] _____ the sum of United States $_____. This draft is drawn under Irrevocable Letter of Credit No. _____.

_____

[Beneficiary Agency]

By: _____

(End of clause)

52.228-15 PERFORMANCE AND PAYMENT BONDS--CONSTRUCTION (JUL 2000)-

(a) Definitions. As used in this clause--

Original contract price means the award price of the contract; or, for requirements contracts, the price payable for the estimated total quantity; or, for indefinite-quantity contracts, the price payable for the specified minimum quantity. Original contract price does not include the price of any options, except those options exercised at the time of contract award.

(b) Amount of required bonds. Unless the resulting contract price is $100,000 or less, the successful offeror shall furnish performance and payment bonds to the Contracting Officer as follows:

(1) Performance bonds (Standard Form 25). The penal amount of performance bonds at the time of contract award shall be 100 percent of the original contract price.

(2) Payment Bonds (Standard Form 25-A). The penal amount of payment bonds at the time of contract award shall be 100 percent of the original contract price.

(3) Additional bond protection. (i) The Government may require additional performance and payment bond protection if the contract price is increased. The increase in protection generally will equal 100 percent of the increase in contract price.

(ii) The Government may secure the additional protection by directing the Contractor to increase the penal amount of the existing bond or to obtain an additional bond.

(c) Furnishing executed bonds. The Contractor shall furnish all executed bonds, including any necessary reinsurance agreements, to the Contracting Officer, within the time period specified in the Bid Guarantee provision of the solicitation, or otherwise specified by the Contracting Officer, but in any event, before starting work.

(d) Surety or other security for bonds. The bonds shall be in the form of firm commitment, supported by corporate sureties whose names appear on the list contained in Treasury Department Circular 570, individual sureties, or by other acceptable security such as postal money order, certified check, cashier's check, irrevocable letter of credit, or, in accordance with Treasury Department regulations, certain bonds or notes of the United States. Treasury Circular 570 is published in the Federal Register or may be obtained from the U.S. Department of Treasury, Financial Management Service, Surety Bond Branch, 401 14th Street, NW, 2nd Floor, West Wing, Washington, DC 20227.

(e) Notice of subcontractor waiver of protection (40 U.S.C. 270b(c). Any waiver of the right to sue on the payment bond is void unless it is in writing, signed by the person whose right is waived, and executed after such person has first furnished labor or material for use in the performance of the contract.

(End of clause)

52.229-3 FEDERAL, STATE, AND LOCAL TAXES (JAN 1991)

(a) "Contract date," as used in this clause, means the date set for bid opening or, if this is a negotiated contract or a modification, the effective date of this contract or modification.

"All applicable Federal, State, and local taxes and duties," as used in this clause, means all taxes and duties, in effect on the contract date, that the taxing authority is imposing and collecting on

the transactions or property covered by this contract.

"After-imposed Federal tax," as used in this clause, means any new or increased Federal excise tax or duty, or tax that was exempted or excluded on the contract date but whose exemption was later revoked or reduced during the contract period, on the transactions or property covered by this contract that the Contractor is required to pay or bear as the result of legislative, judicial, or administrative action taking effect after the contract date. It does not include social security tax or other employment taxes.
"After-relieved Federal tax," as used in this clause, means any amount of Federal excise tax or duty, except social security or other employment taxes, that would otherwise have been payable on the transactions or property covered by this contract, but which the Contractor is not required to pay or bear, or for which the Contractor obtains a refund or drawback, as the result of legislative, judicial, or administrative action taking effect after the contract date.

(b) The contract price includes all applicable Federal, State, and local taxes and duties.

(c) The contract price shall be increased by the amount of any after-imposed Federal tax, provided the Contractor warrants in writing that no amount for such newly imposed Federal excise tax or duty or rate increase was included in the contract price, as a contingency reserve or otherwise.

(d) The contract price shall be decreased by the amount of any after-relieved Federal tax.

(e) The contract price shall be decreased by the amount of any Federal excise tax or duty, except social security or other employment taxes, that the Contractor is required to pay or bear, or does not obtain a refund of, through the Contractor's fault, negligence, or failure to follow instructions of the Contracting Officer.

(f) No adjustment shall be made in the contract price under this clause unless the amount of the adjustment exceeds $250.

(g) The Contractor shall promptly notify the Contracting Officer of all matters relating to any Federal excise tax or duty that reasonably may be expected to result in either an increase or decrease in the contract price and shall take appropriate action as the Contracting Officer directs.

(h) The Government shall, without liability, furnish evidence appropriate to establish exemption from any Federal, State, or local tax when the Contractor requests such evidence and a reasonable basis exists to sustain the exemption.

(End of clause)

52.229-5 TAXES--CONTRACTS PERFORMED IN U.S. POSSESSIONS OR PUERTO RICO (APR 1984)

The term "local taxes," as used in the Federal, State, and local taxes clause of this contract,

includes taxes imposed by a possession of the United States or by Puerto Rico.

(End of clause)

52.232-5 PAYMENTS UNDER FIXED-PRICE CONSTRUCTION CONTRACTS (MAY 1997)

(a) Payment of price. The Government shall pay the Contractor the contract price as provided in this contract.

(b) Progress payments. The Government shall make progress payments monthly as the work proceeds, or at more frequent intervals as determined by the Contracting Officer, on estimates of work accomplished which meets the standards of quality established under the contract, as approved by the Contracting Officer.

(1) The Contractor's request for progress payments shall include the following substantiation:

(i) An itemization of the amounts requested, related to the various elements of work required by the contract covered by the payment requested.

(ii) A listing of the amount included for work performed by each subcontractor under the contract.

(iii) A listing of the total amount of each subcontract under the contract.

(iv) A listing of the amounts previously paid to each such subcontractor under the contract.

(v) Additional supporting data in a form and detail required by the Contracting Officer.

(2) In the preparation of estimates, the Contracting Officer may authorize material delivered on the site and preparatory work done to be taken into consideration. Material delivered to the Contractor at locations other than the site also may be taken into consideration if--

(i) Consideration is specifically authorized by this contract; and

(ii) The Contractor furnishes satisfactory evidence that it has acquired title to such material and that the material will be used to perform this contract.

(c) Contractor certification. Along with each request for progress payments, the Contractor shall furnish the following certification, or payment shall not be made: (However, if the Contractor elects to delete paragraph (c)(4) from the certification, the certification is still acceptable.)

I hereby certify, to the best of my knowledge and belief, that--

(1) The amounts requested are only for performance in accordance with the specifications, terms,

and conditions of the contract;

(2) Payments to subcontractors and suppliers have been made from previous payments received under the contract, and timely payments will be made from the proceeds of the payment covered by this certification, in accordance with subcontract agreements and the requirements of chapter 39 of Title 31, United States Code;

(3) This request for progress payments does not include any amounts which the prime contractor intends to withhold or retain from a subcontractor or supplier in accordance with the terms and conditions of the subcontract; and

(4) This certification is not to be construed as final acceptance of a subcontractor's performance.

_____

(Name)

_____

(Title)

_____

(Date)

(d) Refund of unearned amounts. If the Contractor, after making a certified request for progress payments, discovers that a portion or all of such request constitutes a payment for performance by the Contractor that fails to conform to the specifications, terms, and conditions of this contract (hereinafter referred to as the "unearned amount"), the Contractor shall--

(1) Notify the Contracting Officer of such performance deficiency; and

(2) Be obligated to pay the Government an amount (computed by the Contracting Officer in the manner provided in paragraph (j) of this clause) equal to interest on the unearned amount from the 8th day after the date of receipt of the unearned amount until--

(i) The date the Contractor notifies the Contracting Officer that the performance deficiency has been corrected; or

(ii) The date the Contractor reduces the amount of any subsequent certified request for progress payments by an amount equal to the unearned amount.

(e) Retainage. If the Contracting Officer finds that satisfactory progress was achieved during any period for which a progress payment is to be made, the Contracting Officer shall authorize payment to be made in full. However, if satisfactory progress has not been made, the Contracting Officer may retain a maximum of 10 percent of the amount of the payment until satisfactory

progress is achieved. When the work is substantially complete, the Contracting Officer may retain from previously withheld funds and future progress payments that amount the Contracting Officer considers adequate for protection of the Government and shall release to the Contractor all the remaining withheld funds. Also, on completion and acceptance of each separate building, public work, or other division of the contract, for which the price is stated separately in the contract, payment shall be made for the completed work without retention of a percentage.

(f) Title, liability, and reservation of rights. All material and work covered by progress payments made shall, at the time of payment, become the sole property of the Government, but this shall not be construed as--

(1) Relieving the Contractor from the sole responsibility for all material and work upon which payments have been made or the restoration of any damaged work; or

(2) Waiving the right of the Government to require the fulfillment of all of the terms of the contract.

(g) Reimbursement for bond premiums. In making these progress payments, the Government shall, upon request, reimburse the Contractor for the amount of premiums paid for performance and payment bonds (including coinsurance and reinsurance agreements, when applicable) after the Contractor has furnished evidence of full payment to the surety. The retainage provisions in paragraph (e) of this clause shall not apply to that portion of progress payments attributable to bond premiums.

(h) Final payment. The Government shall pay the amount due the Contractor under this contract after--

(1) Completion and acceptance of all work;

(2) Presentation of a properly executed voucher; and

(3) Presentation of release of all claims against
the Government arising by virtue of this contract, other than claims, in stated amounts, that the Contractor has specifically excepted from the operation of the release. A release may also be required of the assignee if the Contractor’s claim to amounts payable under this contract has been assigned under the Assignment of Claims Act of 1940 (31 U.S.C. 3727 and 41 U.S.C. 15).

(i) Limitation because of undefinitized work. Notwithstanding any provision of this contract, progress payments shall not exceed 80 percent on work accomplished on undefinitized contract actions. A "contract action" is any action resulting in a contract, as defined in FAR Subpart 2.1, including contract modifications for additional supplies or services, but not including contract modifications that are within the scope and under the terms of the contract, such as contract modifications issued pursuant to the Changes clause, or funding and other administrative changes.

(j) Interest computation on unearned amounts. In accordance with 31 U.S.C. 3903(c)(1), the

amount payable under subparagraph (d)(2) of this clause shall be--

(1) Computed at the rate of average bond equivalent rates of 91-day Treasury bills auctioned at the most recent auction of such bills prior to the date the Contractor receives the unearned amount; and

(2) Deducted from the next available payment to the Contractor.

52.232-17 INTEREST (JUNE 1996)

(a) Except as otherwise provided in this contract under a Price Reduction for Defective Cost or Pricing Data clause or a Cost Accounting Standards clause, all amounts that become payable by the Contractor to the Government under this contract (net of any applicable tax credit under the Internal Revenue Code (26 U.S.C. 1481)) shall bear simple interest from the date due until paid unless paid within 30 days of becoming due. The interest rate shall be the interest rate established by the Secretary of the Treasury as provided in Section 12 of the Contract Disputes Act of 1978 (Public Law 95-563), which is applicable to the period in which the amount becomes due, as provided in paragraph (b) of this clause, and then at the rate applicable for each six-month period as fixed by the Secretary until the amount is paid. reproduce, prepare derivative works, distribute copies to the public, and (b) Amounts shall be due at the earliest of the following dates:

(1) The date fixed under this contract.

(2) The date of the first written demand for payment consistent with this contract, including any demand resulting from a default termination.

(3) The date the Government transmits to the Contractor a proposed supplemental agreement to confirm completed negotiations establishing the amount of debt.

(4) If this contract provides for revision of prices, the date of written notice to the Contractor stating the amount of refund payable in connection with a pricing proposal or a negotiated pricing agreement not confirmed by contract modification.

(c) The interest charge made under this clause may be reduced under the procedures prescribed in 32.614-2 of the Federal Acquisition Regulation in effect on the date of this contract.

52.232-23 ASSIGNMENT OF CLAIMS (JAN 1986)

(a) The Contractor, under the Assignment of Claims Act, as amended, 31 U.S.C. 3727, 41 U.S.C. 15 (hereafter referred to as "the Act"), may assign its rights to be paid amounts due or to become due as a result of the performance of this contract to a bank, trust company, or other financing

institution, including any Federal lending agency. The assignee under such an assignment may thereafter further assign or reassign its right under the original assignment to any type of financing institution described in the preceding sentence.

(b) Any assignment or reassignment authorized under the Act and this clause shall cover all unpaid amounts payable under this contract, and shall not be made to more than one party, except that an assignment or reassignment may be made to one party as agent or trustee for two or more parties participating in the financing of this contract.

(c) The Contractor shall not furnish or disclose to any assignee under this contract any classified document (including this contract) or information related to work under this contract until the Contracting Officer authorizes such action in writing.

52.232-27 PROMPT PAYMENT FOR CONSTRUCTION CONTRACTS (JUN 1997)

Notwithstanding any other payment terms in this contract, the Government will make invoice payments and contract financing payments under the terms and conditions specified in this clause. Payment shall be considered as being made on the day a check is dated or the date of an electronic funds transfer. Definitions of pertinent terms are set forth in section 32.902 of the Federal Acquisition Regulation. All days referred to in this clause are calendar days, unless otherwise specified. (However, see subparagraph (a)(3) concerning payments due on Saturdays, Sundays, and legal holidays.)

(a) Invoice payments. (1) Types of invoice payments. For purposes of this clause, there are several types of invoice payments that may occur under this contract, as follows:

(i) Progress payments, if provided for elsewhere in this contract, based on Contracting Officer approval of the estimated amount and value of work or services performed, including payments for reaching milestones in any project:

(A) The due date for making such payments shall be 14 days after receipt of the payment request by the designated billing office. If the designated billing office fails to annotate the payment request with the actual date of receipt at the time of receipt, the payment due date shall be the 14th day after the date of the Contractor's payment request, provided a proper payment request is received and there is no disagreement over quantity, quality, or Contractor compliance with contract requirements.

(B) The due date for payment of any amounts retained by the Contracting Officer in accordance with the clause at 52.232-5, Payments Under Fixed-Price Construction Contracts, shall be as specified in the contract or, if not specified, 30 days after approval for release to the Contractor by the Contracting Officer.

(ii) Final payments based on completion and acceptance of all work and presentation of release of all claims against the Government arising by virtue of the contract, and payments for partial

deliveries that have been accepted by the Government (e.g., each separate building, public work, or other division of the contract for which the price is stated separately in the contract):

(A) The due date for making such payments shall be either the 30th day after receipt by the designated billing office of a proper invoice from the Contractor, or the 30th day after Government acceptance of the work or services completed by the Contractor, whichever is later. If the designated billing office fails to annotate the invoice with the date of actual receipt at the time of receipt, the invoice payment due date shall be the 30th day after the date of the Contractor's invoice, provided a proper invoice is received and there is no disagreement over quantity, quality, or Contractor compliance with contract requirements.

(B) On a final invoice where the payment amount is subject to contract settlement actions (e.g., release of claims), acceptance shall be deemed to have occurred on the effective date of the contract settlement.

(2) Contractor's invoice. The Contractor shall prepare and submit invoices to the designated billing office specified in the contract. A proper invoice must include the items listed in subdivisions (a)(2)(i) through (a)(2)(ix) of this clause. If the invoice does not comply with these requirements, it shall be returned within 7 days after the date the designated billing office received the invoice, with a statement of the reasons why it is not a proper invoice. Untimely notification will be taken into account in computing any interest penalty owed the Contractor in the manner described in subparagraph (a)(4) of this clause.

(i) Name and address of the Contractor.

(ii) Invoice date. (The Contractor is encouraged to date invoices as close as possible to the date of mailing or transmission.)

(iii) Contract number or other authorization for work or services performed (including order number and contract line item number).

(iv) Description of work or services performed.

(v) Delivery and payment terms (e.g., prompt payment discount terms).

(vi) Name and address of Contractor official to whom payment is to be sent (must be the same as that in the contract or in a proper notice of assignment).

(vii) Name (where practicable), title, phone number, and mailing address of person to be notified in the event of a defective invoice.

(viii) For payments described in subdivision (a)(1)(i) of this clause, substantiation of the amounts requested and certification in accordance with the requirements of the clause at 52.232-5, Payments Under Fixed-Price Construction Contracts.

(ix) Any other information or documentation required by the contract.

(x) While not required, the Contractor is strongly encouraged to assign an identification number to each invoice.

(3) Interest penalty. An interest penalty shall be paid automatically by the designated payment office, without request from the Contractor, if payment is not made by the due date and the conditions listed in subdivisions (a)(3)(i) through (a)(3)(iii) of this clause are met, if applicable. However, when the due date falls on a Saturday, Sunday, or legal holiday when Federal Government offices are closed and Government business is not expected to be conducted, payment may be made on the following business day without incurring a late payment interest penalty.

(i) A proper invoice was received by the designated billing office.

(ii) A receiving report or other Government documentation authorizing payment was processed and there was no disagreement over quantity, quality, Contractor compliance with any contract term or condition, or requested progress payment amount.

(iii) In the case of a final invoice for any balance of funds due the Contractor for work or services performed, the amount was not subject to further contract settlement actions between the Government and the Contractor.

(4) Computing penalty amount. The interest penalty shall be at the rate established by the Secretary of the Treasury under section 12 of the Contract Disputes Act of 1978 (41 U.S.C. 611) that is in effect on the day after the due date, except where the interest penalty is prescribed by other governmental authority (e.g., tariffs). This rate is referred to as the "Renegotiation Board Interest Rate," and it is published in the Federal Register semiannually on or about January 1 and July 1. The interest penalty shall accrue daily on the invoice principal payment amount approved by the Government until the payment date of such approved principal amount; and will be compounded in 30-day increments inclusive from the first day after the due date through the payment date. That is, interest accrued at the end of any 30-day period will be added to the approved invoice principal payment amount and will be subject to interest penalties if not paid in the succeeding 30-day period. If the designated billing office failed to notify the Contractor of a defective invoice within the periods prescribed in subparagraph (a)(2) of this clause, the due date on the corrected invoice will be adjusted by subtracting from such date the number of days taken beyond the prescribed notification of defects period. Any interest penalty owed the Contractor will be based on this adjusted due date. Adjustments will be made by the designated payment office for errors in calculating interest penalties.

(i) For the sole purpose of computing an interest penalty that might be due the Contractor for payments described in subdivision (a)(1)(ii) of this clause, Government acceptance or approval shall be deemed to have occurred constructively on the 7th day after the Contractor has completed the work or services in accordance with the terms and conditions of the contract. In the event that actual acceptance or approval occurs within the constructive acceptance or approval period, the determination of an interest penalty shall be based on the actual date of acceptance or approval. Constructive acceptance or constructive approval requirements do not

apply if there is a disagreement over quantity, quality, or Contractor compliance with a contract provision. These requirements also do not compel Government officials to accept work or services, approve Contractor estimates, perform contract administration functions, or make payment prior to fulfilling their responsibilities.

(ii) The following periods of time will not be included in the determination of an interest penalty:

(A) The period taken to notify the Contractor of defects in invoices submitted to the Government, but this may not exceed 7 days.

(B) The period between the defects notice and resubmission of the corrected invoice by the Contractor.

(C) For incorrect electronic funds transfer (EFT) information, in accordance with the EFT clause of this contract.

(iii) Interest penalties will not continue to accrue after the filing of a claim for such penalties under the clause at 52.233-1, Disputes, or for more than 1 year. Interest penalties of less than $1 need not be paid.

(iv) Interest penalties are not required on payment delays due to disagreement between the Government and the Contractor over the payment amount or other issues involving contract compliance, or on amounts temporarily withheld or retained in accordance with the terms of the contract. Claims involving disputes, and any interest that may be payable, will be resolved in accordance with the clause at 52.233-1, Disputes.

(5) Prompt payment discounts. An interest penalty also shall be paid automatically by the designated payment office, without request from the Contractor, if a discount for prompt payment is taken improperly. The interest penalty will be calculated on the amount of discount taken for the period beginning with the first day after the end of the discount period through the date when the Contractor is paid.

(6) Additional interest penalty. (i) If this contract was awarded on or after October 1, 1989, a penalty amount, calculated in accordance with subdivision (a)(6)(iii) of this clause, shall be paid in addition to the interest penalty amount if the Contractor--

(A) Is owed an interest penalty of $1 or more;

(B) Is not paid the interest penalty within 10 days after the date the invoice amount is paid; and

(C) Makes a written demand to the designated payment office for additional penalty payment, in accordance with subdivision (a)(6)(ii) of this clause, postmarked not later than 40 days after the date the invoice amount is paid.

(ii)(A) Contractors shall support written demands for additional penalty payments with the following data. No additional data shall be required. Contractors shall--

(1) Specifically assert that late payment interest is due under a specific invoice, and request payment of all overdue late payment interest penalty and such additional penalty as may be required;

(2) Attach a copy of the invoice on which the unpaid late payment interest was due; and

(3) State that payment of the principal has been received, including the date of receipt.

(B) Demands must be postmarked on or before the 40th day after payment was made, except that--

(1) If the postmark is illegible or nonexistent, the demand must have been received and annotated with the date of receipt by the designated payment office on or before the 40th day after payment was made; or

(2) If the postmark is illegible or nonexistent and the designated payment office fails to make the required annotation, the demand's validity will be determined by the date the Contractor has placed on the demand; provided such date is no later than the 40th day after payment was made.

(iii)(A) The additional penalty shall be equal to 100 percent of any original late payment interest penalty, except--

(1) The additional penalty shall not exceed $5,000;

(2) The additional penalty shall never be less than $25; and

(3) No additional penalty is owed if the amount of the underlying interest penalty is less than $1.

(B) If the interest penalty ceases to accrue in accordance with the limits stated in subdivision (a)(4)(iii) of this clause, the amount of the additional penalty shall be calculated on the amount of interest penalty that would have accrued in the absence of these limits, subject to the overall limits on the additional penalty specified in subdivision (a)(6)(iii)(A) of this clause.

(C) For determining the maximum and minimum additional penalties, the test shall be the interest penalty due on each separate payment made for each separate contract. The maximum and minimum additional penalty shall not be based upon individual invoices unless the invoices are paid separately. Where payments are consolidated for disbursing purposes, the maximum and minimum additional penalty determination shall be made separately for each contract therein.

(D) The additional penalty does not apply to payments regulated by other Government regulations (e.g., payments under utility contracts subject to tariffs and regulation).

(b) Contract financing payments. (1) Due dates for recurring financing payments. If this contract provides for contract financing, requests for payment shall be submitted to the designated billing office as specified in this contract or as directed by the Contracting Officer. Contract financing

payments shall be made on the 30th day after receipt of a proper contract financing request by the designated billing office. In the event that an audit or other review of a specific financing request is required to ensure compliance with the terms and conditions of the contract, the designated payment office is not compelled to make payment by the due date specified.

(2) Due dates for other contract financing. For advance payments, loans, or other arrangements that do not involve recurring submissions of contract financing requests, payment shall be made in accordance with the corresponding contract terms or as directed by the Contracting Officer.

(3) Interest penalty not applicable. Contract financing payments shall not be assessed an interest penalty for payment delays.

(c) Subcontract clause requirements. The Contractor shall include in each subcontract for property or services (including a material supplier) for the purpose of performing this contract the following:

(1) Prompt payment for subcontractors. A payment clause that obligates the Contractor to pay the subcontractor for satisfactory performance under its subcontract not later than 7 days from receipt of payment out of such amounts as are paid to the Contractor under this contract.

(2) Interest for subcontractors. An interest penalty clause that obligates the Contractor to pay to the subcontractor an interest penalty for each payment not made in accordance with the payment clause--

(i) For the period beginning on the day after the required payment date and ending on the date on which payment of the amount due is made; and

(ii) Computed at the rate of interest established by the Secretary of the Treasury, and published in the Federal Register, for interest payments under section 12 of the Contract Disputes Act of 1978 (41 U.S.C. 611) in effect at the time the Contractor accrues the obligation to pay an interest penalty.

(3) Subcontractor clause flowdown. A clause requiring each subcontractor to include a payment clause and an interest penalty clause conforming to the standards set forth in subparagraphs (c)(1) and (c)(2) of this clause in each of its subcontracts, and to require each of its subcontractors to include such clauses in their subcontracts with each lower-tier subcontractor or supplier.

(d) Subcontract clause interpretation. The clauses required by paragraph (c) of this clause shall not be construed to impair the right of the Contractor or a subcontractor at any tier to negotiate, and to include in their subcontract, provisions that--

(1) Retainage permitted. Permit the Contractor or a subcontractor to retain (without cause) a specified percentage of each progress payment otherwise due to a subcontractor for satisfactory performance under the subcontract without incurring any obligation to pay a late payment interest penalty, in accordance with terms and conditions agreed to by the parties to the

subcontract, giving such recognition as the parties deem appropriate to the ability of a subcontractor to furnish a performance bond and a payment bond;

(2) Withholding permitted. Permit the Contractor or subcontractor to make a determination that part or all of the subcontractor's request for payment may be withheld in accordance with the subcontract agreement; and

(3) Withholding requirements. Permit such withholding without incurring any obligation to pay a late payment penalty if--

(i) A notice conforming to the standards of paragraph (g) of this clause previously has been furnished to the subcontractor; and

(ii) A copy of any notice issued by a Contractor pursuant to subdivision (d)(3)(i) of this clause has been furnished to the Contracting Officer.

(e) Subcontractor withholding procedures. If a Contractor, after making a request for payment to the Government but before making a payment to a subcontractor for the subcontractor's performance covered by the payment request, discovers that all or a portion of the payment otherwise due such subcontractor is subject to withholding from the subcontractor in accordance with the subcontract agreement, then the Contractor shall--

(1) Subcontractor notice. Furnish to the subcontractor a notice conforming to the standards of paragraph (g) of this clause as soon as practicable upon ascertaining the cause giving rise to a withholding, but prior to the due date for subcontractor payment;

(2) Contracting Officer notice. Furnish to the Contracting Officer, as soon as practicable, a copy of the notice furnished to the subcontractor pursuant to subparagraph (e)(1) of this clause;

(3) Subcontractor progress payment reduction. Reduce the subcontractor's progress payment by an amount not to exceed the amount specified in the notice of withholding furnished under subparagraph (e)(1) of this clause;

(4) Subsequent subcontractor payment. Pay the subcontractor as soon as practicable after the correction of the identified subcontract performance deficiency, and--

(i) Make such payment within--

(A) Seven days after correction of the identified subcontract performance deficiency (unless the funds therefor must be recovered from the Government because of a reduction under subdivision (e)(5)(i)) of this clause; or

(B) Seven days after the Contractor recovers such funds from the Government; or

(ii) Incur an obligation to pay a late payment interest penalty computed at the rate of interest established by the Secretary of the Treasury, and published in the Federal Register, for interest

payments under section 12 of the Contracts Disputes Act of 1978 (41 U.S.C. 611) in effect at the time the Contractor accrues the obligation to pay an interest penalty;

(5) Notice to Contracting Officer. Notify the Contracting Officer upon--

(i) Reduction of the amount of any subsequent certified application for payment; or

(ii) Payment to the subcontractor of any withheld amounts of a progress payment, specifying--

(A) The amounts withheld under subparagraph (e)(1) of this clause; and

(B) The dates that such withholding began and ended; and

(6) Interest to Government. Be obligated to pay to the Government an amount equal to interest on the withheld payments (computed in the manner provided in 31 U.S.C. 3903(c)(1)), from the 8th day after receipt of the withheld amounts from the Government until--

(i) The day the identified subcontractor performance deficiency is corrected; or

(ii) The date that any subsequent payment is reduced under subdivision (e)(5)(i) of this clause.

(f) Third-party deficiency reports. (1) Withholding from subcontractor. If a Contractor, after making payment to a first-tier subcontractor, receives from a supplier or subcontractor of the first-tier subcontractor (hereafter referred to as a "second-tier subcontractor") a written notice in accordance with section 2 of the Act of August 24, 1935 (40 U.S.C. 270b, Miller Act), asserting a deficiency in such first-tier subcontractor's performance under the contract for which the Contractor may be ultimately liable, and the Contractor determines that all or a portion of future payments otherwise due such first-tier subcontractor is subject to withholding in accordance with the subcontract agreement, the Contractor may, without incurring an obligation to pay an interest penalty under subparagraph (e)(6) of this clause--

(i) Furnish to the first-tier subcontractor a notice conforming to the standards of paragraph (g) of this clause as soon as practicable upon making such determination; and

(ii) Withhold from the first-tier subcontractor's next available progress payment or payments an amount not to exceed the amount specified in the notice of withholding furnished under subdivision (f)(1)(i) of this clause.

(2) Subsequent payment or interest charge. As soon as practicable, but not later than 7 days after receipt of satisfactory written notification that the identified subcontract performance deficiency has been corrected, the Contractor shall--

(i) Pay the amount withheld under subdivision (f)(1)(ii) of this clause to such first-tier subcontractor; or

(ii) Incur an obligation to pay a late payment interest penalty to such first-tier subcontractor

computed at the rate of interest established by the Secretary of the Treasury, and published in the Federal Register, for interest payments under section 12 of the Contracts Disputes Act of 1978 (41 U.S.C. 611) in effect at the time the Contractor accrues the obligation to pay an interest penalty.

(g) Written notice of subcontractor withholding. A written notice of any withholding shall be issued to a subcontractor (with a copy to the Contracting Officer of any such notice issued by the Contractor), specifying--

(1) The amount to be withheld;

(2) The specific causes for the withholding under the terms of the subcontract; and

(3) The remedial actions to be taken by the subcontractor in order to receive payment of the amounts withheld.

(h) Subcontractor payment entitlement. The Contractor may not request payment from the Government of any amount withheld or retained in accordance with paragraph (d) of this clause until such time as the Contractor has determined and certified to the Contracting Officer that the subcontractor is entitled to the payment of such amount.

(i) Prime-subcontractor disputes. A dispute between the Contractor and subcontractor relating to the amount or entitlement of a subcontractor to a payment or a late payment interest penalty under a clause included in the subcontract pursuant to paragraph (c) of this clause does not constitute a dispute to which the United States is a party. The United States may not be interpleaded in any judicial or administrative proceeding involving such a dispute.

(j) Preservation of prime-subcontractor rights. Except as provided in paragraph (i) of this clause, this clause shall not limit or impair any contractual, administrative, or judicial remedies otherwise available to the Contractor or a subcontractor in the event of a dispute involving late payment or nonpayment by the Contractor or deficient subcontract performance or nonperformance by a subcontractor.

(k) Non-recourse for prime contractor interest penalty. The Contractor's obligation to pay an interest penalty to a subcontractor pursuant to the clauses included in a subcontract under paragraph (c) of this clause shall not be construed to be an obligation of the United States for such interest penalty. A cost-reimbursement claim may not include any amount for reimbursement of such interest penalty.

52.232-33 PAYMENT BY ELECTRONIC FUNDS TRANSFER—CENTRAL CONTRACTOR REGISTRATION (MAY 1999)

(a) Method of payment. (1) All payments by the Government under this contract shall be made by electronic funds transfer (EFT), except as provided in paragraph (a)(2) of this clause. As used

in this clause, the term “EFT” refers to the funds transfer and may also include the payment information transfer.

(2) In the event the Government is unable to release one or more payments by EFT, the Contractor agrees to either--

(i) Accept payment by check or some other mutually agreeable method of payment; or

(ii) Request the Government to extend the payment due date until such time as the Government can make payment by EFT (but see paragraph (d) of this clause).

(b) Contractor's EFT information. The Government shall make payment to the Contractor using the EFT information contained in the Central Contractor Registration (CCR) database. In the event that the EFT information changes, the Contractor shall be responsible for providing the updated information to the CCR database.

(c) Mechanisms for EFT payment. The Government may make payment by EFT through either the Automated Clearing House (ACH) network, subject to the rules of the National Automated Clearing House Association, or the Fedwire Transfer System. The rules governing Federal payments through the ACH are contained in 31 CFR part 210.

(d) Suspension of payment. If the Contractor's EFT information in the CCR database is incorrect, then the Government need not make payment to the Contractor under this contract until correct EFT information is entered into the CCR database; and any invoice or contract financing request shall be deemed not to be a proper invoice for the purpose of prompt payment under this contract. The prompt payment terms of the contract regarding notice of an improper invoice and delays in accrual of interest penalties apply.

(e) Contractor EFT arrangements. If the Contractor has identified multiple payment receiving points (i.e., more than one remittance address and/or EFT information set) in the CCR database, and the Contractor has not notified the Government of the payment receiving point applicable to this contract, the Government shall make payment to the first payment receiving point (EFT information set or remittance address as applicable) listed in the CCR database.

(f) Liability for uncompleted or erroneous transfers. (1) If an uncompleted or erroneous transfer occurs because the Government used the Contractor's EFT information incorrectly, the Government remains responsible for--

(i) Making a correct payment;

(ii) Paying any prompt payment penalty due; and

(iii) Recovering any erroneously directed funds.

(2) If an uncompleted or erroneous transfer occurs because the Contractor's EFT information was incorrect, or was revised within 30 days of Government release of the EFT payment transaction instruction to the Federal Reserve System, and--

(i) If the funds are no longer under the control of the payment office, the Government is deemed to have made payment and the Contractor is responsible for recovery of any erroneously directed funds; or

(ii) If the funds remain under the control of the payment office, the Government shall not make payment, and the provisions of paragraph (d) of this clause shall apply.

(g) EFT and prompt payment. A payment shall be deemed to have been made in a timely manner in accordance with the prompt payment terms of this contract if, in the EFT payment transaction instruction released to the Federal Reserve System, the date specified for settlement of the payment is on or before the prompt payment due date, provided the specified payment date is a valid date under the rules of the Federal Reserve System.

(h) EFT and assignment of claims. If the Contractor assigns the proceeds of this contract as provided for in the assignment of claims terms of this contract, the Contractor shall require as a condition of any such assignment, that the assignee shall register in the CCR database and shall be paid by EFT in accordance with the terms of this clause. In all respects, the requirements of this clause shall apply to the assignee as if it were the Contractor. EFT information that shows the ultimate recipient of the transfer to be other than the Contractor, in the absence of a proper assignment of claims acceptable to the Government, is incorrect EFT information within the meaning of paragraph (d) of this clause.

(i) Liability for change of EFT information by financial agent. The Government is not liable for errors resulting from changes to EFT information made by the Contractor's financial agent.

(j) Payment information. The payment or disbursing office shall forward to the Contractor available payment information that is suitable for transmission as of the date of release of the EFT instruction to the Federal Reserve System. The Government may request the Contractor to designate a desired format and method(s) for delivery of payment information from a list of formats and methods the payment office is capable of executing. However, the Government does not guarantee that any particular format or method of delivery is available at any particular payment office and retains the latitude to use the format and delivery method most convenient to the Government. If the Government makes payment by check in accordance with paragraph (a) of this clause, the Government shall mail the payment information to the remittance address contained in the CCR database.

(End of Clause)

52.233-1 DISPUTES (DEC 1998)

(a) This contract is subject to the Contract Disputes Act of 1978, as amended (41 U.S.C. 601-

613).

(b) Except as provided in the Act, all disputes arising under or relating to this contract shall be resolved under this clause.

(c) "Claim," as used in this clause, means a written demand or written assertion by one of the contracting parties seeking, as a matter of right, the payment of money in a sum certain, the adjustment or interpretation of contract terms, or other relief arising under or relating to this contract. A claim arising under a contract, unlike a claim relating to that contract, is a claim that can be resolved under a contract clause that provides for the relief sought by the claimant. However, a written demand or written assertion by the Contractor seeking the payment of money exceeding $100,000 is not a claim under the Act until certified as required by subparagraph (d)(2) of this clause. A voucher, invoice, or other routine request for payment that is not in dispute when submitted is not a claim under the Act. The submission may be converted to a claim under the Act, by complying with the submission and certification requirements of this clause, if it is disputed either as to liability or amount or is not acted upon in a reasonable time.

(d)(1) A claim by the Contractor shall be made in writing and, unless otherwise stated in this contract, submitted within 6 years after accrual of the claim to the Contracting Officer for a written decision. A claim by the Government against the Contractor shall be subject to a written decision by the Contracting Officer.

(2)(i) The contractors shall provide the certification specified in subparagraph (d)(2)(iii) of this clause when submitting any claim -

(A) Exceeding $100,000; or

(B) Regardless of the amount claimed, when using -

(1) Arbitration conducted pursuant to 5 U.S.C. 575-580; or

(2) Any other alternative means of dispute resolution (ADR) technique that the agency elects to handle in accordance with the Administrative Dispute Resolution Act (ADRA).

(ii) The certification requirement does not apply to issues in controversy that have not been submitted as all or part of a claim.

(iii) The certification shall state as follows: "I certify that the claim is made in good faith; that the supporting data are accurate and complete to the best of my knowledge and belief; that the amount requested accurately reflects the contract adjustment for which the Contractor believes the Government is liable; and that I am duly authorized to certify the claim on behalf of the Contractor.

(3) The certification may be executed by any person duly authorized to bind the Contractor with respect to the claim.

(e) For Contractor claims of $100,000 or less, the Contracting Officer must, if requested in writing by the Contractor, render a decision within 60 days of the request. For Contractor-certified claims over $100,000, the Contracting Officer must, within 60 days, decide the claim or notify the Contractor of the date by which the decision will be made.

(f) The Contracting Officer's decision shall be final unless the Contractor appeals or files a suit as provided in the Act.

(g) If the claim by the Contractor is submitted to the Contracting Officer or a claim by the Government is presented to the Contractor, the parties, by mutual consent, may agree to use alternative dispute resolution (ADR). If the Contractor refuses an offer for ADR, the Contractor shall inform the Contracting Officer, in writing, of the Contractor's specific reasons for rejecting the request.

(h) The Government shall pay interest on the amount found due and unpaid from (1) the date the Contracting Officer receives the claim (certified, if required); or (2) the date that payment otherwise would be due, if that date is later, until the date of payment. With regard to claims having defective certifications, as defined in (FAR) 48 CFR 33.201, interest shall be paid from the date that the Contracting Officer initially receives the claim. Simple interest on claims shall be paid at the rate, fixed by the Secretary of the Treasury as provided in the Act, which is applicable to the period during which the Contracting Officer receives the claim and then at the rate applicable for each 6-month period as fixed by the Treasury Secretary during the pendency of the claim.

(i) The Contractor shall proceed diligently with performance of this contract, pending final resolution of any request for relief, claim, appeal, or action arising under the contract, and comply with any decision of the Contracting Officer.

(End of clause)

52.233-3 PROTEST AFTER AWARD (AUG. 1996)

(a) Upon receipt of a notice of protest (as defined in FAR 33.101) or a determination that a protest is likely (see FAR 33.102(d)), the Contracting Officer may, by written order to the Contractor, direct the Contractor to stop performance of the work called for by this contract. The order shall be specifically identified as a stop-work order issued under this clause. Upon receipt of the order, the Contractor shall immediately comply with its terms and take all reasonable steps to minimize the incurrence of costs allocable to the work covered by the order during the period of work stoppage. Upon receipt of the final decision in the protest, the Contracting Officer shall either--

(1) Cancel the stop-work order; or

(2) Terminate the work covered by the order as provided in the Default, or the Termination for Convenience of the Government, clause of this contract.

(b) If a stop-work order issued under this clause is canceled either before or after a final decision in the protest, the Contractor shall resume work. The Contracting Officer shall make an equitable adjustment in the delivery schedule or contract price, or both, and the contract shall be modified, in writing, accordingly, if--

(1) The stop-work order results in an increase in the time required for, or in the Contractor's cost properly allocable to, the performance of any part of this contract; and

(2) The Contractor asserts its right to an adjustment within 30 days after the end of the period of work stoppage; provided, that if the Contracting Officer decides the facts justify the action, the Contracting Officer may receive and act upon a proposal at any time before final payment under this contract.

(c) If a stop-work order is not canceled and the work covered by the order is terminated for the convenience of the Government, the Contracting Officer shall allow reasonable costs resulting from the stop-work order in arriving at the termination settlement.

(d) If a stop-work order is not canceled and the work covered by the order is terminated for default, the Contracting Officer shall allow, by equitable adjustment or otherwise, reasonable costs resulting from the stop-work order.

(e) The Government's rights to terminate this contract at any time are not affected by action taken under this clause.

(f) If, as the result of the Contractor's intentional or negligent misstatement, misrepresentation, or miscertification, a protest related to this contract is sustained, and the Government pays costs, as provided in FAR 33.102(b)(2) or 33.104(h)(1), the Government may require the Contractor to reimburse the Government the amount of such costs. In addition to any other remedy available, and pursuant to the requirements of Subpart 32.6, the Government may collect this debt by offsetting the amount against any payment due the Contractor under any contract between the Contractor and the Government.

52.236-2 DIFFERING SITE CONDITIONS (APR 1984)

As prescribed in 36.502, insert the following clause in solicitations and contracts when a fixed-price construction contract or a fixed-price dismantling, demolition, or removal of improvements contract is contemplated and the contract amount is expected to exceed the small purchase limitation. The Contracting Officer may insert the clause in solicitations and contracts when a fixed-price construction or a fixed-price contract for dismantling, demolition, or removal of improvements is contemplated and the contract amount is expected to be within the small purchase limitation.

(a) The Contractor shall promptly, and before the conditions are disturbed, give a written notice

to the Contracting Officer of

(1) subsurface or latent physical conditions at the site which differ materially from those indicated in this contract, or

(2) unknown physical conditions at the site, of an unusual nature, which differ materially from those ordinarily encountered and generally recognized as inhering in work of the character provided for in the contract.

(b) The Contracting Officer shall investigate the site conditions promptly after receiving the notice. If the conditions do materially so differ and cause an increase or decrease in the Contractor's cost of, or the time required for, performing any part of the work under this contract, whether or not changed as a result of the conditions, an equitable adjustment shall be made under this clause and the contract modified in writing accordingly.

(c) No request by the Contractor for an equitable adjustment to the contract under this clause shall be allowed, unless the Contractor has given the written notice required; provided, that the time prescribed in (a) above for giving written notice may be extended by the Contracting Officer.

(d) No request by the Contractor for an equitable adjustment to the contract for differing site conditions shall be allowed if made after final payment under this contract.

52.236-3 SITE INVESTIGATION AND CONDITIONS AFFECTING THE WORK (APR 1984)

(a) The Contractor acknowledges that it has taken steps reasonably necessary to ascertain the nature and location of the work, and that it has investigated and satisfied itself as to the general and local conditions which can affect the work or its cost, including but not limited to

(1) conditions bearing upon transportation, disposal, handling, and storage of materials;

(2) the availability of labor, water, electric power, and roads;

(3) uncertainties of weather, river stages, tides, or similar physical conditions at the site;

(4) the conformation and conditions of the ground; and (5) the character of equipment and facilities needed preliminary to and during work performance. The Contractor also acknowledges that it has satisfied itself as to the character, quality, and quantity of surface and subsurface materials or obstacles to be encountered insofar as this information is reasonably ascertainable from an inspection of the site, including all exploratory work done by the Government, as well as from the drawings and specifications made a part of this contract. Any failure of the Contractor to take the actions described and acknowledged in this paragraph will not relieve the Contractor from responsibility for estimating properly the difficulty and cost of

successfully performing the work, or for proceeding to successfully perform the work without additional expense to the Government.

(b) The Government assumes no responsibility for any conclusions or interpretations made by the Contractor based on the information made available by the Government. Nor does the Government assume responsibility for any understanding reached or representation made concerning conditions which can affect the work by any of its officers or agents before the execution of this contract, unless that understanding or representation is expressly stated in this contract.

52.236-5 MATERIAL AND WORKMANSHIP (APR 1984)

(a) All equipment, material, and articles incorporated into the work covered by this contract shall be new and of the most suitable grade for the purpose intended, unless otherwise specifically provided in this contract. References in the specifications to equipment, material, articles, or patented processes by trade name, make, or catalog number, shall be regarded as establishing a standard of quality and shall not be construed as limiting competition. The Contractor may, at its option, use any equipment, material, article, or process that, in the judgment of the Contracting Officer, is equal to that named in the specifications, unless otherwise specifically provided in this contract.

(b) The Contractor shall obtain the Contracting Officer's approval of the machinery and mechanical and other equipment to be incorporated into the work. When requesting approval, the Contractor shall furnish to the Contracting Officer the name of the manufacturer, the model number, and other information concerning the performance, capacity, nature, and rating of the machinery and mechanical and other equipment. When required by this contract or by the Contracting Officer, the Contractor shall also obtain the Contracting Officer's approval of the material or articles which the Contractor contemplates incorporating into the work. When requesting approval, the Contractor shall provide full information concerning the material or articles. When directed to do so, the Contractor shall submit samples for approval at the Contractor's expense, with all shipping charges prepaid. Machinery, equipment, material, and articles that do not have the required approval shall be installed or used at the risk of subsequent rejection.

(c) All work under this contract shall be performed in a skillful and workmanlike manner. The Contracting Officer may require, in writing, that the Contractor remove from the work any employee the Contracting Officer deems incompetent, careless, or otherwise objectionable.

52.236-6 SUPERINTENDENCE BY THE CONTRACTOR (APR 1984)

At all times during performance of this contract and until the work is completed and accepted, the Contractor shall directly superintend the work or assign and have on the worksite a

competent superintendent who is satisfactory to the Contracting Officer and has authority to act for the Contractor.

52.236-7 PERMITS AND RESPONSIBILITIES (NOV 1991)

The Contractor shall, without additional expense to the Government, be responsible for obtaining any necessary licenses and permits, and for complying with any Federal, State, and municipal laws, codes, and regulations applicable to the performance of the work. The Contractor shall also be responsible for all damages to persons or property that occur as a result of the Contractor's fault or negligence. The Contractor shall also be responsible for all materials delivered and work performed until completion and acceptance of the entire work, except for any completed unit of work which may have been accepted under the contract.

52.236-8 OTHER CONTRACTS (APR 1984)

The Government may undertake or award other contracts for additional work at or near the site of the work under this contract. The Contractor shall fully cooperate with the other contractors and with Government employees and shall carefully adapt scheduling and performing the work under this contract to accommodate the additional work, heeding any direction that may be provided by the Contracting Officer. The Contractor shall not commit or permit any act that will interfere with the performance of work by any other contractor or by Government employees.

52.236-9 PROTECTION OF EXISTING VEGETATION, STRUCTURES, EQUIPMENT, UTILITIES, AND IMPROVEMENTS (APR 1984)

(a) The Contractor shall preserve and protect all structures, equipment, and vegetation (such as trees, shrubs, and grass) on or adjacent to the work site, which are not to be removed and which do not unreasonably interfere with the work required under this contract. The Contractor shall only remove trees when specifically authorized to do so, and shall avoid damaging vegetation that will remain in place. If any limbs or branches of trees are broken during contract performance, or by the careless operation of equipment, or by workmen, the Contractor shall trim those limbs or branches with a clean cut and paint the cut with a tree-pruning compound as directed by the Contracting Officer.

(b) The Contractor shall protect from damage all existing improvements and utilities

(1) at or near the work site, and

(2) on adjacent property of a third party, the locations of which are made known to or should be known by the Contractor. The Contractor shall repair any damage to those facilities, including

those that are the property of a third party, resulting from failure to comply with the requirements of this contract or failure to exercise reasonable care in performing the work. If the Contractor fails or refuses to repair the damage promptly, the Contracting Officer may have the necessary work performed and charge the cost to the Contractor.

52.236-10 OPERATIONS AND STORAGE AREAS (APR 1984)

(a) The Contractor shall confine all operations (including storage of materials) on Government premises to areas authorized or approved by the Contracting Officer. The Contractor shall hold and save the Government, its officers and agents, free and harmless from liability of any nature occasioned by the Contractor's performance.

(b) Temporary buildings (e.g., storage sheds, shops, offices) and utilities may be erected by the Contractor only with the approval of the Contracting Officer and shall be built with labor and materials furnished by the Contractor without expense to the Government. The temporary buildings and utilities shall remain the property of the Contractor and shall be removed by the Contractor at its expense upon completion of the work. With the written consent of the Contracting Officer, the buildings and utilities may be abandoned and need not be removed.

(c) The Contractor shall, under regulations prescribed by the Contracting Officer, use only established roadways, or use temporary roadways constructed by the Contractor when and as authorized by the Contracting Officer. When materials are transported in prosecuting the work, vehicles shall not be loaded beyond the loading capacity recommended by the manufacturer of the vehicle or prescribed by any Federal, State, or local law or regulation. When it is necessary to cross curbs or sidewalks, the Contractor shall protect them from damage. The Contractor shall repair or pay for the repair of any damaged curbs, sidewalks, or roads.

52.236-11 USE AND POSSESSION PRIOR TO COMPLETION (APR 1984)

(a) The Government shall have the right to take possession of or use any completed or partially completed part of the work. Before taking possession of or using any work, the Contracting Officer shall furnish the Contractor a list of items of work remaining to be performed or corrected on those portions of the work that the Government intends to take possession of or use. However, failure of the Contracting Officer to list any item of work shall not relieve the Contractor of responsibility for complying with the terms of the contract. The Government's possession or use shall not be deemed an acceptance of any work under the contract.

(b) While the Government has such possession or use, the Contractor shall be relieved of the responsibility for the loss of or damage to the work resulting from the Government's possession or use, notwithstanding the terms of the clause in this contract entitled "Permits and Responsibilities." If prior possession or use by the Government delays the progress of the work or causes additional expense to the Contractor, an equitable adjustment shall be made in the

contract price or the time of completion, and the contract shall be modified in writing accordingly.

52.236-12 CLEANING UP (APR 1984)

The Contractor shall at all times keep the work area, including storage areas, free from accumulations of waste materials. Before completing the work, the Contractor shall remove from the work and premises any rubbish, tools, scaffolding, equipment, and materials that are not the property of the Government. Upon completing the work, the Contractor shall leave the work area in a clean, neat, and orderly condition satisfactory to the Contracting Officer.

52.236-13 ACCIDENT PREVENTION (NOV 1991) – ALTERNATE I (NOV 1991)

(a) The Contractor shall provide and maintain work environments and procedures which will

(1) safeguard the public and Government personnel, property, materials, supplies, and equipment exposed to Contractor operations and activities;

(2) avoid interruptions of Government operations and delays in project completion dates; and

(3) control costs in the performance of this contract.

(b) For these purposes on contracts for construction or dismantling, demolition, or removal of improvements, the Contractor shall-

(1) Provide appropriate safety barricades, signs, and signal lights;

(2) Comply with the standards issued by the Secretary of Labor at 29 CFR Part 1926 and 29 CFR Part 1910; and

(3) Ensure that any additional measures the Contracting Officer determines to be reasonably necessary for the purposes are taken.

(c) If this contract is for construction or dismantling, demolition or removal of improvements with any Department of Defense agency or component, the Contractor shall comply with all pertinent provisions of the latest version of U.S. Army Corps of Engineers Safety and Health Requirements Manual, EM 385-1-1, in effect on the date of the solicitation.

(d) Whenever the Contracting Officer becomes aware of any noncompliance with these requirements or any condition which poses a serious or imminent danger to the health or safety of the public or Government personnel, the Contracting Officer shall notify the Contractor orally, with written confirmation, and request immediate initiation of corrective action. This notice,

when delivered to the Contractor or the Contractor's representative at the work site, shall be deemed sufficient notice of the noncompliance and that corrective action is required. After receiving the notice, the Contractor shall immediately take corrective action. If the Contractor fails or refuses to promptly take corrective action, the Contracting Officer may issue an order stopping all or part of the work until satisfactory corrective action has been taken. The Contractor shall not be entitled to any equitable adjustment of the contract price or extension of the performance schedule on any stop work order issued under this clause.

(e) The Contractor shall insert this clause, including this paragraph (e), with appropriate changes in the designation of the parties, in subcontracts.

(f) Before commencing the work, the Contractor shall-

(1) Submit a written proposed plan for implementing this clause. The plan shall include an analysis of the significant hazards to life, limb, and property inherent in contract work performance and a plan for controlling these hazards; and

(2) Meet with representatives of the Contracting Officer to discuss and develop a mutual understanding relative to administration of the overall safety program.

52.236-15 SCHEDULES FOR CONSTRUCTION CONTRACTS (APR 1984)

(a) The Contractor shall, within five days after the work commences on the contract or another period of time determined by the Contracting Officer, prepare and submit to the Contracting Officer for approval three copies of a practicable schedule showing the order in which the Contractor proposes to perform the work, and the dates on which the Contractor contemplates starting and completing the several salient features of the work (including acquiring materials, plant, and equipment). The schedule shall be in the form of a progress chart of suitable scale to indicate appropriately the percentage of work scheduled for completion by any given date during the period. If the Contractor fails to submit a schedule within the time prescribed, the Contracting Officer may withhold approval of progress payments until the Contractor submits the required schedule.

(b) The Contractor shall enter the actual progress on the chart as directed by the Contracting Officer, and upon doing so shall immediately deliver three copies of the annotated schedule to the Contracting Officer. If, in the opinion of the Contracting Officer, the Contractor falls behind the approved schedule, the Contractor shall take steps necessary to improve its progress, including those that may be required by the Contracting Officer, without additional cost to the Government. In this circumstance, the Contracting Officer may require the Contractor to increase the number of shifts, overtime operations, days of work, and/or the amount of construction plant, and to submit for approval any supplementary schedule or schedules in chart form as the Contracting Officer deems necessary to demonstrate how the approved rate of progress will be regained.

(c) Failure of the Contractor to comply with the requirements of the Contracting Officer under this clause shall be grounds for a determination by the Contracting Officer that the Contractor is not prosecuting the work with sufficient diligence to ensure completion within the time specified in the contract. Upon making this determination, the Contracting Officer may terminate the Contractor's right to proceed with the work, or any separable part of it, in accordance with the default terms of this contract.

52.236-21 SPECIFICATIONS AND DRAWINGS FOR CONSTRUCTION (FEB 1997)

(a) The Contractor shall keep on the work site a copy of the drawings and specifications and shall at all times give the Contracting Officer access thereto. Anything mentioned in the specifications and not shown on the drawings, or shown on the drawings and not mentioned in the specifications, shall be of like effect as if shown or mentioned in both. In case of difference between drawings and specifications, the specifications shall govern. In case of discrepancy in the figures, in the drawings, or in the specifications, the matter shall be promptly submitted to the Contracting Officer, who shall promptly make a determination in writing. Any adjustment by the Contractor without such a determination shall be at its own risk and expense. The Contracting Officer shall furnish from time to time such detailed drawings and other information as considered necessary, unless otherwise provided.

(b) Wherever in the specifications or upon the drawings the words "directed", "required", "ordered", "designated", "prescribed", or words of like import are used, it shall be understood that the "direction", "requirement", "order", "designation", or "prescription", of the Contracting Officer is intended and similarly the words "approved", "acceptable", "satisfactory", or words of like import shall mean "approved by," or "acceptable to", or "satisfactory to" the Contracting Officer, unless otherwise expressly stated.

(c) Where "as shown," as indicated", "as detailed", or words of similar import are used, it shall be understood that the reference is made to the drawings accompanying this contract unless stated otherwise. The word "provided" as used herein shall be understood to mean "provide complete in place," that is "furnished and installed".

(d) Shop drawings means drawings, submitted to the Government by the Contractor, subcontractor, or any lower tier subcontractor pursuant to a construction contract, showing in detail (1) the proposed fabrication and assembly of structural elements, and (2) the installation (i.e., fit, and attachment details) of materials or equipment. It includes drawings, diagrams, layouts, schematics, descriptive literature, illustrations, schedules, performance and test data, and similar materials furnished by the contractor to explain in detail specific portions of the work required by the contract. The Government may duplicate, use, and disclose in any manner and for any purpose shop drawings delivered under this contract.

(e) If this contract requires shop drawings, the Contractor shall coordinate all such drawings, and review them for accuracy, completeness, and compliance with contract requirements and shall indicate its approval thereon as evidence of such coordination and review. Shop drawings

submitted to the Contracting Officer without evidence of the Contractor's approval may be returned for resubmission. The Contracting Officer will indicate an approval or disapproval of the shop drawings and if not approved as submitted shall indicate the Government's reasons therefor. Any work done before such approval shall be at the Contractor's risk. Approval by the Contracting Officer shall not relieve the Contractor from responsibility for any errors or omissions in such drawings, nor from responsibility for complying with the requirements of this contract, except with respect to variations described and approved in accordance with (f) below.

(f) If shop drawings show variations from the contract requirements, the Contractor shall describe such variations in writing, separate from the drawings, at the time of submission. If the Contracting Officer approves any such variation, the Contracting Officer shall issue an appropriate contract modification, except that, if the variation is minor or does not involve a change in price or in time of performance, a modification need not be issued.

(g) The Contractor shall submit to the Contracting Officer for approval four copies (unless otherwise indicated) of all shop drawings as called for under the various headings of these specifications. Three sets (unless otherwise indicated) of all shop drawings, will be retained by the Contracting Officer and one set will be returned to the Contractor.

52.236-26 PRECONSTRUCTION CONFERENCE (FEB 1995)

If the Contracting Officer decides to conduct a preconstruction conference, the successful offeror will be notified and will be required to attend. The Contracting Officer's notification will include specific details regarding the date, time, and location of the conference, any need for attendance by subcontractors, and information regarding the items to be discussed.

52.242-13 BANKRUPTCY (JUL 1995)

In the event the Contractor enters into proceedings relating to bankruptcy, whether voluntary or involuntary, the Contractor agrees to furnish, by certified mail or electronic commerce method authorized by the contract, written notification of the bankruptcy to the Contracting Officer responsible for administering the contract. This notification shall be furnished within five days of the initiation of the proceedings relating to bankruptcy filing. This notification shall include the date on which the bankruptcy petition was filed, the identity of the court in which the bankruptcy petition was filed, and a listing of Government contract numbers and contracting offices for all Government contracts against which final payment has not been made. This obligation remains in effect until final payment under this contract.

(End of clause)

52.242-14 SUSPENSION OF WORK (APR 1984)

(a) The Contracting Officer may order the Contractor, in writing, to suspend, delay, or interrupt all or any part of the work of this contract for the period of time that the Contracting Officer determines appropriate for the convenience of the Government.

(b) If the performance of all or any part of the work is, for an unreasonable period of time, suspended, delayed, or interrupted (1) by an act of the Contracting Officer in the administration of this contract, or (2) by the Contracting Officer's failure to act within the time specified in this contract (or within a reasonable time if not specified), an adjustment shall be made for any increase in the cost of performance of this contract (excluding profit) necessarily caused by the unreasonable suspension, delay, or interruption, and the contract modified in writing accordingly. However, no adjustment shall be made under this clause for any suspension, delay, or interruption to the extent that performance would have been so suspended, delayed, or interrupted by any other cause, including the fault or negligence of the Contractor, or for which an equitable adjustment is provided for or excluded under any other term or condition of this contract. (c) A claim under this clause shall not be allowed (1) for any costs incurred more than 20 days before the Contractor shall have notified the Contracting Officer in writing of the act or failure to act involved (but this requirement shall not apply as to a claim resulting from a suspension order), and (2) unless the claim, in an amount stated, is asserted in writing as soon as practicable after the termination of the suspension, delay, or interruption, but not later than the date of final payment under the contract.

52.243-4 CHANGES (AUG 1987)

(a) The Contracting Officer may, at any time, without notice to the sureties, if any, by written order designated or indicated to be a change order, make changes in the work within the general scope of the contract, including changes--

(1) In the specifications (including drawings and designs);

(2) In the method or manner of performance of the work;

(3) In the Government-furnished facilities, equipment, materials, services, or site; or

(4) Directing acceleration in the performance of the work.

(b) Any other written or oral order (which, as used in this paragraph (b), includes direction, instruction, interpretation, or determination) from the Contracting Officer that causes a change shall be treated as a change order under this clause; provided, that the Contractor gives the Contracting Officer written notice stating

(1) the date, circumstances, and source of the order and

(2) that the Contractor regards the order as a change order.

(c) Except as provided in this clause, no order, statement, or conduct of the Contracting Officer shall be treated as a change under this clause or entitle the Contractor to an equitable adjustment.

(d) If any change under this clause causes an increase or decrease in the Contractor's cost of, or the time required for, the performance of any part of the work under this contract, whether or not changed by any such order, the Contracting Officer shall make an equitable adjustment and modify the contract in writing. However, except for an adjustment based on defective specifications, no adjustment for any change under paragraph (b) of this clause shall be made for any costs incurred more than 20 days before the Contractor gives written notice as required. In the case of defective specifications for which the Government is responsible, the equitable adjustment shall include any increased cost reasonably incurred by the Contractor in attempting to comply with the defective specifications.

(e) The Contractor must assert its right to an adjustment under this clause within 30 days after

(1) receipt of a written change order under paragraph (a) of this clause or (2) the furnishing of a written notice under paragraph (b) of this clause, by submitting to the Contracting Officer a written statement describing the general nature and amount of the proposal, unless this period is extended by the Government. The statement of proposal for adjustment may be included in the notice under paragraph (b) above.

(f) No proposal by the Contractor for an equitable adjustment shall be allowed if asserted after final payment under this contract.

52.244-6 SUBCONTRACTS FOR COMMERCIAL ITEMS AND COMMERCIAL COMPONENTS (OCT 1998)

(a) Definitions.

"Commercial item", as used in this clause, has the meaning contained in the clause at 52.202-1, Definitions.

"Subcontract", as used in this clause, includes a transfer of commercial items between divisions, subsidiaries, or affiliates of the Contractor or subcontractor at any tier.

(b) To the maximum extent practicable, the Contractor shall incorporate, and require its subcontractors at all tiers to incorporate, commercial items or nondevelopmental items as components of items to be supplied under this contract.

(c) Notwithstanding any other clause of this contract, the Contractor is not required to include any FAR provision or clause, other than those listed below to the extent they are applicable and as may be required to establish the reasonableness of prices under Part 15, in a subcontract at any tier for commercial items or commercial components:

(1) 52.222-26, Equal Opportunity (E.O. 11246);

(2) 52.222-35, Affirmative Action for Disabled Veterans and Veterans of the Vietnam Era (38 U.S.C. 4212(a));

(3) 52.222-36, Affirmative Action for Workers with Disabilities (29 U.S.C. 793); and

(4) 52.247-64, Preference for Privately-Owned U.S.-Flagged Commercial Vessels (46 U.S.C. 1241)(flow down not required for subcontracts awarded beginning May 1, 1996).

(d) The Contractor shall include the terms of this clause, including this paragraph (d), in subcontracts awarded under this contract.

52.245-2 GOVERNMENT PROPERTY (FIXED-PRICE CONTRACTS) (DEC 1989)

(a) Government-furnished property. (1) The Government shall deliver to the Contractor, for use in connection with and under the terms of this contract, the Government-furnished property described in the Schedule or specifications together with any related data and information that the Contractor may request and is reasonably required for the intended use of the property (hereinafter referred to as "Government-furnished property").

(2) The delivery or performance dates for this contract are based upon the expectation that Government-furnished property suitable for use (except for property furnished "as is") will be delivered to the Contractor at the times stated in the Schedule or, if not so stated, in sufficient time to enable the Contractor to meet the contract's delivery or performance dates.

(3) If Government-furnished property is received by the Contractor in a condition not suitable for the intended use, the Contractor shall, upon receipt of it, notify the Contracting Officer, detailing the facts, and, as directed by the Contracting Officer and at Government expense, either repair, modify, return, or otherwise dispose of the property. After completing the directed action and upon written request of the Contractor, the Contracting Officer shall make an equitable adjustment as provided in paragraph (h) of this clause.

(4) If Government-furnished property is not delivered to the Contractor by the required time, the Contracting Officer shall, upon the Contractor's timely written request, make a determination of the delay, if any, caused the Contractor and shall make an equitable adjustment in accordance with paragraph (h) of this clause.

(b) Changes in Government-furnished property. (1) The Contracting Officer may, by written notice, (i) decrease the Government-furnished property provided or to be provided under this contract, or (ii) substitute other Government-furnished property for the property to be provided by the Government, or to be acquired by the Contractor for the Government, under this contract. The Contractor shall promptly take such action as the Contracting Officer may direct regarding the removal, shipment, or disposal of the property covered by such notice.

(2) Upon the Contractor's written request, the Contracting Officer shall make an equitable adjustment to the contract in accordance with paragraph (h) of this clause, if the Government has agreed in the Schedule to make the property available for performing this contract and there is any--

(i) Decrease or substitution in this property pursuant to subparagraph (b)(1) of this clause; or

(ii) Withdrawal of authority to use this property, if provided under any other contract or lease.

(c) Title in Government property. (1) The Government shall retain title to all Government-furnished property.

(2) All Government-furnished property and all property acquired by the Contractor, title to which vests in the Government under this paragraph (collectively referred to as "Government property"), are subject to the provisions of this clause. However, special tooling accountable to this contract is subject to the provisions of the Special Tooling clause and is not subject to the provisions of this clause. Title to Government property shall not be affected by its incorporation into or attachment to any property not owned by the Government, nor shall Government property become a fixture or lose its identity as personal property by being attached to any real property.

(3) Title to each item of facilities and special test equipment acquired by the Contractor for the Government under this contract shall pass to and vest in the Government when its use in performing this contract commences or when the Government has paid for it, whichever is earlier, whether or not title previously vested in the Government.

(4) If this contract contains a provision directing the Contractor to purchase material for which the Government will reimburse the Contractor as a direct item of cost under this contract--

(i) Title to material purchased from a vendor shall pass to and vest in the Government upon the vendor's delivery of such material; and

(ii) Title to all other material shall pass to and vest in the Government upon--

(A) Issuance of the material for use in contract performance;

(B) Commencement of processing of the material or its use in contract performance; or

(C) Reimbursement of the cost of the material by the Government, whichever occurs first.

(d) Use of Government property. The Government property shall be used only for performing this contract, unless otherwise provided in this contract or approved by the Contracting Officer.

(e) Property administration. (1) The Contractor shall be responsible and accountable for all Government property provided under this contract and shall comply with Federal Acquisition Regulation (FAR) Subpart 45.5, as in effect on the date of this contract.

(2) The Contractor shall establish and maintain a program for the use, maintenance, repair, protection, and preservation of Government property in accordance with sound industrial practice and the applicable provisions of Subpart 45.5 of the FAR.

(3) If damage occurs to Government property, the risk of which has been assumed by the Government under this contract, the Government shall replace the items or the Contractor shall make such repairs as the Government directs. However, if the Contractor cannot effect such repairs within the time required, the Contractor shall dispose of the property as directed by the Contracting Officer. When any property for which the Government is responsible is replaced or repaired, the Contracting Officer shall make an equitable adjustment in accordance with paragraph (h) of this clause.

(4) The Contractor represents that the contract price does not include any amount for repairs or replacement for which the Government is responsible. Repair or replacement of property for which the Contractor is responsible shall be accomplished by the Contractor at its own expense.

(f) Access. The Government and all its designees shall have access at all reasonable times to the premises in which any Government property is located for the purpose of inspecting the Government property.

(g) Risk of loss. Unless otherwise provided in this contract, the Contractor assumes the risk of, and shall be responsible for, any loss or destruction of, or damage to, Government property upon its delivery to the Contractor or upon passage of title to the Government under paragraph (c) of this clause. However, the Contractor is not responsible for reasonable wear and tear to Government property or for Government property properly consumed in performing this contract.

(h) Equitable adjustment. When this clause specifies an equitable adjustment, it shall be made to any affected contract provision in accordance with the procedures of the Changes clause. When appropriate, the Contracting Officer may initiate an equitable adjustment in favor of the Government. The right to an equitable adjustment shall be the Contractor's exclusive remedy. The Government shall not be liable to suit for breach of contract for--

(1) Any delay in delivery of Government-furnished property;

(2) Delivery of Government-furnished property in a condition not suitable for its intended use;

(3) A decrease in or substitution of Government-furnished property; or

(4) Failure to repair or replace Government property for which the Government is responsible.

(i) Final accounting and disposition of Government property. Upon completing this contract, or at such earlier dates as may be fixed by the Contracting Officer, the Contractor shall submit, in a form acceptable to the Contracting Officer, inventory schedules covering all items of Government property (including any resulting scrap) not consumed in performing this contract or

delivered to the Government. The Contractor shall prepare for shipment, deliver f.o.b. origin, or dispose of the Government property as may be directed or authorized by the Contracting Officer. The net proceeds of any such disposal shall be credited to the contract price or shall be paid to the Government as the Contracting Officer directs.

(j) Abandonment and restoration of Contractor's premises. Unless otherwise provided herein, the Government--

(1) May abandon any Government property in place, at which time all obligations of the Government regarding such abandoned property shall cease; and

(2) Has no obligation to restore or rehabilitate the Contractor's premises under any circumstances (e.g., abandonment, disposition upon completion of need, or upon contract completion). However, if the Government-furnished property (listed in the Schedule or specifications) is withdrawn or is unsuitable for the intended use, or if other Government property is substituted, then the equitable adjustment under paragraph (h) of this clause may properly include restoration or rehabilitation costs.

(k) Communications. All communications under this clause shall be in writing.

(l) Overseas contracts. If this contract is to be performed outside of the United States of America, its territories, or possessions, the words "Government" and "Government-furnished" (wherever they appear in this clause) shall be construed as "United States Government" and "United States Government-furnished," respectively.

(End of clause)

52.245-4 GOVERNMENT-FURNISHED PROPERTY (SHORT FORM) (APR 1984)

(a) The Government shall deliver to the Contractor, at the time and locations stated in this contract, the Government-furnished property described in the Schedule or specifications. If that property, suitable for its intended use, is not delivered to the Contractor, the Contracting Officer shall equitably adjust affected provisions of this contract in accordance with the Changes clause when--

(1) The Contractor submits a timely written request for an equitable adjustment; and

(2) The facts warrant an equitable adjustment.

(b) Title to Government-furnished property shall remain in the Government. The Contractor shall use the Government-furnished property only in connection with this contract. The Contractor shall maintain adequate property control records in accordance with sound industrial practice and will make such records available for Government inspection at all reasonable times, unless the clause at Federal Acquisition Regulation 52.245-1, Property Records, is included in this contract.

(c) Upon delivery of Government-furnished property to the Contractor, the Contractor assumes the risk and responsibility for its loss or damage, except--

(1) For reasonable wear and tear;

(2) To the extent property is consumed in performing this contract; or

(3) As otherwise provided for by the provisions of this contract.

(d) Upon completing this contract, the Contractor shall follow the instructions of the Contracting Officer regarding the disposition of all Government-furnished property not consumed in performing this contract or previously delivered to the Government. The Contractor shall prepare for shipment, deliver f.o.b. origin, or dispose of the Government property, as may be directed or authorized by the Contracting Officer. The net proceeds of any such disposal shall be credited to the contract price or shall be paid to the Government as directed by the Contracting Officer.

(e) If this contract is to be performed outside the United States of America, its territories, or possessions, the words "Government" and "Government-furnished" (wherever they appear in this clause) shall be construed as "United States Government" and "United States Government-furnished," respectively.

52.246-12 INSPECTION OF CONSTRUCTION (AUG 1996)

(a) Definition. "Work" includes, but is not limited to, materials, workmanship, and manufacture and fabrication of components.

(b) The Contractor shall maintain an adequate inspection system and perform such inspections as will ensure that the work performed under the contract conforms to contract requirements. The Contractor shall maintain complete inspection records and make them available to the Government. All work shall be conducted under the general direction of the Contracting Officer and is subject to Government inspection and test at all places and at all reasonable times before acceptance to ensure strict compliance with the terms of the contract.

(c) Government inspections and tests are for the sole benefit of the Government and do not--

(1) Relieve the Contractor of responsibility for providing adequate quality control measures;

(2) Relieve the Contractor of responsibility for damage to or loss of the material before acceptance;

(3) Constitute or imply acceptance; or

(4) Affect the continuing rights of the Government after acceptance of the completed work under

paragraph (i) of this section.

(d) The presence or absence of a Government inspector does not relieve the Contractor from any contract requirement, nor is the inspector authorized to change any term or condition of the specification without the Contracting Officer's written authorization.

(e) The Contractor shall promptly furnish, at no increase in contract price, all facilities, labor, and material reasonably needed for performing such safe and convenient inspections and tests as may be required by the Contracting Officer. The Government may charge to the Contractor any additional cost of inspection or test when work is not ready at the time specified by the Contractor for inspection or test, or when prior rejection makes reinspection or retest necessary. The Government shall perform all inspections and tests in a manner that will not unnecessarily delay the work. Special, full size, and performance tests shall be performed as described in the contract.

(f) The Contractor shall, without charge, replace or correct work found by the Government not to conform to contract requirements, unless in the public interest the Government consents to accept the work with an appropriate adjustment in contract price. The Contractor shall promptly segregate and remove rejected material from the premises.

(g) If the Contractor does not promptly replace or correct rejected work, the Government may (1) by contract or otherwise, replace or correct the work and charge the cost to the Contractor or (2) terminate for default the Contractor's right to proceed.

(h) If, before acceptance of the entire work, the Government decides to examine already completed work by removing it or tearing it out, the Contractor, on request, shall promptly furnish all necessary facilities, labor, and material. If the work is found to be defective or nonconforming in any material respect due to the fault of the Contractor or its subcontractors, the Contractor shall defray the expenses of the examination and of satisfactory reconstruction. However, if the work is found to meet contract requirements, the Contracting Officer shall make an equitable adjustment for the additional services involved in the examination and reconstruction, including, if completion of the work was thereby delayed, an extension of time.

(i) Unless otherwise specified in the contract, the Government shall accept, as promptly as practicable after completion and inspection, all work required by the contract or that portion of the work the Contracting Officer determines can be accepted separately. Acceptance shall be final and conclusive except for latent defects, fraud, gross mistakes amounting to fraud, or the Government's rights under any warranty or guarantee.

52.248-3 VALUE ENGINEERING--CONSTRUCTION (FEB 2000) - ALTERNATE I (APR 1984)

(a) General. The Contractor is encouraged to develop, prepare, and submit value engineering change proposals (VECP's) voluntarily. The Contractor shall share in any instant contract savings realized from accepted VECP's, in accordance with paragraph (f) below.

(b) Definitions. "Collateral costs," as used in this clause, means agency costs of operation, maintenance, logistic support, or Government-furnished property.

"Collateral savings," as used in this clause, means those measurable net reductions resulting from a VECP in the agency's overall projected collateral costs, exclusive of acquisition savings, whether or not the acquisition cost changes.

"Contractor's development and implementation costs," as used in this clause, means those costs the Contractor incurs on a VECP specifically in developing, testing, preparing, and submitting the VECP, as well as those costs the Contractor incurs to make the contractual changes required by Government acceptance of a VECP.

"Government costs," as used in this clause, means those agency costs that result directly from developing and implementing the VECP, such as any net increases in the cost of testing, operations, maintenance, and logistic support. The term does not include the normal administrative costs of processing the VECP.

"Instant contract savings," as used in this clause, means the estimated reduction in Contractor cost of performance resulting from acceptance of the VECP, minus allowable Contractor's development and implementation costs, including subcontractors' development and implementation costs (see paragraph (h) below).

"Value engineering change proposal (VECP)" means a proposal that--

(1) Requires a change to this, the instant contract, to implement; and

(2) Results in reducing the contract price or estimated cost without impairing essential functions or characteristics; provided, that it does not involve a change--

(i) In deliverable end item quantities only; or

(ii) To the contract type only.

(c) VECP preparation. As a minimum, the Contractor shall include in each VECP the information described in subparagraphs (1) through (7) below. If the proposed change is affected by contractually required configuration management or similar procedures, the instructions in those procedures relating to format, identification, and priority assignment shall govern VECP preparation. The VECP shall include the following:

(1) A description of the difference between the existing contract requirement and that proposed, the comparative advantages and disadvantages of each, a justification when an item's function or characteristics are being altered, and the effect of the change on the end item's performance.

(2) A list and analysis of the contract requirements that must be changed if the VECP is accepted, including any suggested specification revisions.

(3) A separate, detailed cost estimate for (i) the affected portions of the existing contract requirement and (ii) the VECP. The cost reduction associated with the VECP shall take into account the Contractor's allowable development and implementation costs, including any amount attributable to subcontracts under paragraph (h) below.

(4) A description and estimate of costs the Government may incur in implementing the VECP, such as test and evaluation and operating and support costs.

(5) A prediction of any effects the proposed change would have on collateral costs to the agency.

(6) A statement of the time by which a contract modification accepting the VECP must be issued in order to achieve the maximum cost reduction, noting any effect on the contract completion time or delivery schedule.

(7) Identification of any previous submissions of the VECP, including the dates submitted, the agencies and contract numbers involved, and previous Government actions, if known.

(d) Submission. The Contractor shall submit VECP's to the Resident Engineer at the worksite, with a copy to the Contracting Officer.

(e) Government action. (1) The Contracting Officer shall notify the Contractor of the status of the VECP within 45 calendar days after the contracting office receives it. If additional time is required, the Contracting Officer shall notify the Contractor within the 45-day period and provide the reason for the delay and the expected date of the decision. The Government will process VECP's expeditiously; however, it shall not be liable for any delay in acting upon a VECP.

(2) If the VECP is not accepted, the Contracting Officer shall notify the Contractor in writing, explaining the reasons for rejection. The Contractor may withdraw any VECP, in whole or in part, at any time before it is accepted by the Government. The Contracting Officer may require that the Contractor provide written notification before undertaking significant expenditures for VECP effort.

(3) Any VECP may be accepted, in whole or in part, by the Contracting Officer's award of a modification to this contract citing this clause. The Contracting Officer may accept the VECP, even though an agreement on price reduction has not been reached, by issuing the Contractor a notice to proceed with the change. Until a notice to proceed is issued or a contract modification applies a VECP to this contract, the Contractor shall perform in accordance with the existing contract. The decision to accept or reject all or part of any VECP is a unilateral decision made solely at the discretion of the Contracting Officer.

(f) Sharing.

(1) Rates. The Government's share of savings is determined by subtracting Government costs from instant contract savings and multiplying the result by (i) 45 percent for fixed-price contracts or (ii) 75 percent for cost-reimbursement contracts.

(2) Payment. Payment of any share due the Contractor for use of a VECP on this contract shall be authorized by a modification to this contract to--

(i) Accept the VECP;

(ii) Reduce the contract price or estimated cost by the amount of instant contract savings; and

(iii) Provide the Contractor's share of savings by adding the amount calculated to the contract price or fee.

(g) Subcontracts. The Contractor shall include an appropriate value engineering clause in any subcontract of $50,000 or more and may include one in subcontracts of lesser value. In computing any adjustment in this contract's price under paragraph (f) above, the Contractor's allowable development and implementation costs shall include any subcontractor's allowable development and implementation costs clearly resulting from a VECP accepted by the Government under this contract, but shall exclude any value engineering incentive payments to a subcontractor. The Contractor may choose any arrangement for subcontractor value engineering incentive payments; provided, that these payments shall not reduce the Government's share of the savings resulting from the VECP.

(h) Data. The Contractor may restrict the Government's right to use any part of a VECP or the supporting data by marking the following legend on the affected parts:

"These data, furnished under the Value Engineering--Construction clause of contract . . . . . , shall not be disclosed outside the Government or duplicated, used, or disclosed, in whole or in part, for any purpose other than to evaluate a value engineering change proposal submitted under the clause. This restriction does not limit the Government's right to use information contained in these data if it has been obtained or is otherwise available from the Contractor or from another source without limitations."

If a VECP is accepted, the Contractor hereby grants the Government unlimited rights in the VECP and supporting data, except that, with respect to data qualifying and submitted as limited rights technical data, the Government shall have the rights specified in the contract modification implementing the VECP and shall appropriately mark the data. (The terms "unlimited rights" and "limited rights" are defined in Part 27 of the Federal Acquisition Regulation.)

(j) Collateral savings. If a VECP is accepted, the Contracting Officer will increase the instant contract amount by 20 percent of any projected collateral savings determined to be realized in a typical year of use after subtracting any Government costs not previously offset. However, the Contractor's share of collateral savings will not exceed the contract's firm-fixed-price or estimated cost, at the time the VECP is accepted, or $100,000, whichever is greater. The Contracting Officer will be the sole determiner of the amount of collateral savings.

(End of clause)

52.249-1 TERMINATION FOR CONVENIENCE OF THE GOVERNMENT (FIXED-PRICE) (SHORT FORM) (APR 1984)

The Contracting Officer, by written notice, may terminate this contract, in whole or in part, when it is in the Government's interest. If this contract is terminated, the rights, duties, and obligations of the parties, including compensation to the Contractor, shall be in accordance with Part 49 of the Federal Acquisition Regulation in effect on the date of this contract.

52.249-2 TERMINATION FOR CONVENIENCE OF THE GOVERNMENT (FIXED-PRICE) (SEP 1996) - ALTERNATE I (SEP 1996)

(a) The Government may terminate performance of work under this contract in whole or, from time to time, in part if the Contracting Officer determines that a termination is in the Government's interest. The Contracting Officer shall terminate by delivering to the Contractor a Notice of Termination specifying the extent of termination and the effective date.

(b) After receipt of a Notice of Termination, and except as directed by the Contracting Officer, the Contractor shall immediately proceed with the following obligations, regardless of any delay in determining or adjusting any amounts due under this clause:

(1) Stop work as specified in the notice.

(2) Place no further subcontracts or orders (referred to as subcontracts in this clause) for materials, services, or facilities, except as necessary to complete the continued portion of the contract.

(3) Terminate all subcontracts to the extent they relate to the work terminated.

(4) Assign to the Government, as directed by the Contracting Officer, all right, title, and interest of the Contractor under the subcontracts terminated, in which case the Government shall have the right to settle or to pay any termination settlement proposal arising out of those terminations.

(5) With approval or ratification to the extent required by the Contracting Officer, settle all outstanding liabilities and termination settlement proposals arising from the termination of subcontracts; the approval or ratification will be final for purposes of this clause.

(6) As directed by the Contracting Officer, transfer title and deliver to the Government (i) the fabricated or unfabricated parts, work in process, completed work, supplies, and other material produced or acquired for the work terminated, and (ii) the completed or partially completed

plans, drawings, information, and other property that, if the contract had been completed, would be required to be furnished to the Government.

(7) Complete performance of the work not terminated.

(8) Take any action that may be necessary, or that the Contracting Officer may direct, for the protection and preservation of the property related to this contract that is in the possession of the Contractor and in which the Government has or may acquire an interest.

(9) Use its best efforts to sell, as directed or authorized by the Contracting Officer, any property of the types referred to in subparagraph (b)(6) of this clause; provided, however, that the Contractor (i) is not required to extend credit to any purchaser and (ii) may acquire the property under the conditions prescribed by, and at prices approved by, the Contracting Officer. The proceeds of any transfer or disposition will be applied to reduce any payments to be made by the Government under this contract, credited to the price or cost of the work, or paid in any other manner directed by the Contracting Officer.

(c) The Contractor shall submit complete termination inventory schedules no later than 120 days from the effective date of termination, unless extended in writing by the Contracting Officer upon written request of the Contractor within this 120-day period.

(d) After expiration of the plant clearance period as defined in Subpart 45.6 of the Federal Acquisition Regulation, the Contractor may submit to the Contracting Officer a list, certified as to quantity and quality, of termination inventory not previously disposed of, excluding items authorized for disposition by the Contracting Officer. The Contractor may request the Government to remove those items or enter into an agreement for their storage. Within 15 days, the Government will accept title to those items and remove them or enter into a storage agreement. The Contracting Officer may verify the list upon removal of the items, or if stored, within 45 days from submission of the list, and shall correct the list, as necessary, before final settlement.

(e) After termination, the Contractor shall submit a final termination settlement proposal to the Contracting Officer in the form and with the certification prescribed by the Contracting Officer. The Contractor shall submit the proposal promptly, but no later than 1 year from the effective date of termination, unless extended in writing by the Contracting Officer upon written request of the Contractor within this 1-year period. However, if the Contracting Officer determines that the facts justify it, a termination settlement proposal may be received and acted on after 1 year or any extension. If the Contractor fails to submit the proposal within the time allowed, the Contracting Officer may determine, on the basis of information available, the amount, if any, due the Contractor because of the termination and shall pay the amount determined.

(f) Subject to paragraph (e) of this clause, the Contractor and the Contracting Officer may agree upon the whole or any part of the amount to be paid or remaining to be paid because of the termination. The amount may include a reasonable allowance for profit on work done. However, the agreed amount, whether under this paragraph (g) or paragraph (g) of this clause, exclusive of costs shown in subparagraph (g)(3) of this clause, may not exceed the total contract price as

reduced by (1) the amount of payments previously made and (2) the contract price of work not terminated. The contract shall be modified, and the Contractor paid the agreed amount. Paragraph (g) of this clause shall not limit, restrict, or affect the amount that may be agreed upon to be paid under this paragraph.

(g) If the Contractor and Contracting Officer fail to agree on the whole amount to be paid the Contractor because of the termination of work, the Contracting Officer shall pay the Contractor the amounts determined as follows, but without duplication of any amounts agreed upon under paragraph (f) of this clause:

(1) For contract work performed before the effective date of termination, the total (without duplication of any items) of--

(i) The cost of this work;

(ii) The cost of settling and paying termination settlement proposals under terminated subcontracts that are properly chargeable to the terminated portion of the contract if not included in subdivision (g)(1)(i) of this clause; and

(iii) A sum, as profit on subdivision (g)(1)(i) of this clause, determined by the Contracting Officer under 49.202 of the Federal Acquisition Regulation, in effect on the date of this contract, to be fair and reasonable; however, if it appears that the Contractor would have sustained a loss on the entire contract had it been completed, the Contracting Officer shall allow no profit under this subdivision (iii) and shall reduce the settlement to reflect the indicated rate of loss.

(2) The reasonable costs of settlement of the work terminated, including--

(i) Accounting, legal, clerical, and other expenses reasonably necessary for the preparation of termination settlement proposals and supporting data;

(ii) The termination and settlement of subcontracts (excluding the amounts of such settlements); and

(iii) Storage, transportation, and other costs incurred, reasonably necessary for the preservation, protection, or disposition of the termination inventory.

(h) Except for normal spoilage, and except to the extent that the Government expressly assumed the risk of loss, the Contracting Officer shall exclude from the amounts payable to the Contractor under paragraph (g) of this clause, the fair value, as determined by the Contracting Officer, of property that is destroyed, lost, stolen, or damaged so as to become undeliverable to the Government or to a buyer.

(i) The cost principles and procedures of Part 31 of the Federal Acquisition Regulation, in effect on the date of this contract, shall govern all costs claimed, agreed to, or determined under this clause.

(j) The Contractor shall have the right of appeal, under the Disputes clause, from any determination made by the Contracting Officer under paragraph (e), (g), or (l) of this clause, except that if the Contractor failed to submit the termination settlement proposal or request for equitable adjustment within the time provided in paragraph (e) or (l), respectively, and failed to request a time extension, there is no right of appeal.

(k) In arriving at the amount due the Contractor under this clause, there shall be deducted--

(1) All unliquidated advance or other payments to the Contractor under the terminated portion of this contract;

(2) Any claim which the Government has against the Contractor under this contract; and

(3) The agreed price for, or the proceeds of sale of, materials, supplies, or other things acquired by the Contractor or sold under the provisions of this clause and not recovered by or credited to the Government.

(l) If the termination is partial, the Contractor may file a proposal with the Contracting Officer for an equitable adjustment of the price(s) of the continued portion of the contract. The Contracting Officer shall make any equitable adjustment agreed upon. Any proposal by the Contractor for an equitable adjustment under this clause shall be requested within 90 days from the effective date of termination unless extended in writing by the Contracting Officer.

(m)(1) The Government may, under the terms and conditions it prescribes, make partial payments and payments against costs incurred by the Contractor for the terminated portion of the contract, if the Contracting Officer believes the total of these payments will not exceed the amount to which the Contractor will be entitled.

(2) If the total payments exceed the amount finally determined to be due, the Contractor shall repay the excess to the Government upon demand, together with interest computed at the rate established by the Secretary of the Treasury under 50 U.S.C. App. 1215(b)(2). Interest shall be computed for the period from the date the excess payment is received by the Contractor to the date the excess is repaid. Interest shall not be charged on any excess payment due to a reduction in the Contractor's termination settlement proposal because of retention or other disposition of termination inventory until 10 days after the date of the retention or disposition, or a later date determined by the Contracting Officer because of the circumstances.

(n) Unless otherwise provided in this contract or by statute, the Contractor shall maintain all records and documents relating to the terminated portion of this contract for 3 years after final settlement. This includes all books and other evidence bearing on the Contractor's costs and expenses under this contract. The Contractor shall make these records and documents available to the Government, at the Contractor's office, at all reasonable times, without any direct charge. If approved by the Contracting Officer, photographs, microphotographs, or other authentic reproductions may be maintained instead of original records and documents.

52.249-10 DEFAULT (FIXED-PRICE CONSTRUCTION) (APR 1984)

(a) If the Contractor refuses or fails to prosecute the work or any separable part, with the diligence that will insure its completion within the time specified in this contract including any extension, or fails to complete the work within this time, the Government may, by written notice to the Contractor, terminate the right to proceed with the work (or the separable part of the work) that has been delayed. In this event, the Government may take over the work and complete it by contract or otherwise, and may take possession of and use any materials, appliances, and plant on the work site necessary for completing the work. The Contractor and its sureties shall be liable for any damage to the Government resulting from the Contractor's refusal or failure to complete the work within the specified time, whether or not the Contractor's right to proceed with the work is terminated. This liability includes any increased costs incurred by the Government in completing the work.

(b) The Contractor's right to proceed shall not be terminated nor the Contractor charged with damages under this clause, if--

(1) The delay in completing the work arises from unforeseeable causes beyond the control and without the fault or negligence of the Contractor. Examples of such causes include

(i) acts of God or of the public enemy,

(ii) acts of the Government in either its sovereign or contractual capacity,

(iii) acts of another Contractor in the performance of a contract with the Government,

(iv) fires,

(v) floods,

(vi) epidemics,

(vii) quarantine restrictions,

(viii) strikes,

(ix) freight embargoes,

(x) unusually severe weather, or delays of subcontractors or suppliers at any tier arising from unforeseeable causes beyond the control and without the fault or negligence of both the Contractor and the subcontractors or suppliers; and

(2) The Contractor, within 10 days from the beginning of any delay (unless extended by the Contracting Officer), notifies the Contracting Officer in writing of the causes of delay. The Contracting Officer shall ascertain the facts and the extent of delay. If, in the judgment of the Contracting Officer, the findings of fact warrant such action, the time for completing the work

shall be extended. The findings of the Contracting Officer shall be final and conclusive on the parties, but subject to appeal under the Disputes clause.

(c) If, after termination of the Contractor's right to proceed, it is determined that the Contractor was not in default, or that the delay was excusable, the rights and obligations of the parties will be the same as if the termination had been issued for the convenience of the Government.

The rights and remedies of the Government in this clause are in addition to any other rights and remedies provided by law or under this contract.

52.252-2 CLAUSES INCORPORATED BY REFERENCE (FEB 1998)

This contract incorporates one or more clauses by reference, with the same force and effect as if they were given in full text. Upon request, the Contracting Officer will make their full text available. Also, the full text of a clause may be accessed electronically at this/these address(es):

http://www.arnet.gov/far
http://farsite.hill.af.mil
http://www.dtic.mil/dfars

52.252-4 ALTERATIONS IN CONTRACT (APR 1984)

Portions of this contract are altered as follows:

N/A

(End of clause)

52.252-6 AUTHORIZED DEVIATIONS IN CLAUSES (APR 1984)

(a) The use in this solicitation or contract of any Federal Acquisition Regulation (48 CFR Chapter 1) clause with an authorized deviation is indicated by the addition of "(DEVIATION)" after the date of the clause.

(b) The use in this solicitation or contract of any DoD FAR Supplement (48 CFR Chapter 2) clause with an authorized deviation is indicated by the addition of "(DEVIATION)" after the name of the regulation.

52.253-1 COMPUTER GENERATED FORMS (JAN 1991)

(a) Any data required to be submitted on a Standard or Optional Form prescribed by the Federal Acquisition Regulation (FAR) may be submitted on a computer generated version of the form, provided there is no change to the name, content, or sequence of the data elements on the form, and provided the form carries the Standard or Optional Form number and edition date.

(b) Unless prohibited by agency regulations, any data required to be submitted on an agency unique form prescribed by an agency supplement to the FAR may be submitted on a computer generated version of the form provided there is no change to the name, content, or sequence of the data elements on the form and provided the form carries the agency form number and edition date.

(c) If the Contractor submits a computer generated version of a form that is different than the required form, then the rights and obligations of the parties will be determined based on the content of the required form.

252.201-7000 CONTRACTING OFFICER'S REPRESENTATIVE (DEC 1991)

(a) "Definition. Contracting officer's representative" means an individual designated in accordance with subsection 201.602-2 of the Defense Federal Acquisition Regulation Supplement and authorized in writing by the contracting officer to perform specific technical or administrative functions.

(b) If the Contracting Officer designates a contracting officer's representative (COR), the Contractor will receive a copy of the written designation. It will specify the extent of the COR's authority to act on behalf of the contracting officer. The COR is not authorized to make any commitments or changes that will affect price, quality, quantity, delivery, or any other term or condition of the contract.

(End of clause)

252.203-7001 PROHIBITION ON PERSONS CONVICTED OF FRAUD OR OTHER DEFENSE-CONTRACT-RELATED FELONIES (MAR 1999)

(a) Definitions. As used in this clause—

(1) "Arising out of a contract with the DoD" means any act in connection with—

(i) Attempting to obtain;

(ii) Obtaining, or

(iii) Performing a contract or first-tier subcontract of any agency, department, or component of the Department of Defense (DoD).

(2) "Conviction of fraud or any other felony" means any conviction for fraud or a felony in violation of state or Federal criminal statutes, whether entered on a verdict or plea, including a plea of *nolo contendere*, for which sentence has been imposed.

(3) "Date of conviction" means the date judgment was entered against the individual.

(b) Any individual who is convicted after September 29, 1988, of fraud or any other felony arising out of a contract with the DoD is prohibited from serving--

(1) In a management or supervisory capacity on any DoD contract or first-tier subcontract;

(2) On the board of directors of any DoD contractor or first-tier subcontractor;

(3) As a consultant, agent, or representative for any DoD contractor or first-tier subcontractor; or

(4) In any other capacity with the authority to influence, advise, or control the decisions of any DoD contractor or subcontractor with regard to any DoD contract or first-tier subcontract.

(c) Unless waived, the prohibition in paragraph (b) of this clause applies for not less than 5 years from the date of conviction.

(d) 10 U.S.C. 2408 provides that a defense contractor or first-tier subcontractor shall be subject to a criminal penalty of not more than $500,000 if convicted of knowingly—

(1) Employing a person under a prohibition specified in paragraph (b) of this clause; or

(2) Allowing such a person to serve on the board of directors of the contractor or first-tier subcontractor.

(e) In addition to the criminal penalties contained in 10 U.S.C. 2408, the Government may consider other available remedies, such as—

(1) Suspension or debarment;

(2) Cancellation of the contract at no cost to the Government; or

(3) Termination of the contract for default.

(f) The Contractor may submit written requests for waiver of the prohibition in paragraph (b) of this clause to the Contracting Officer. Requests shall clearly identify—

(1) The person involved;

(2) The nature of the conviction and resultant sentence or punishment imposed;

(3) The reasons for the requested waiver; and

(4) An explanation of why a waiver is in the interest of national security.

(g) The Contractor agrees to include the substance of this clause, appropriately modified to reflect the identity and relationship of the parties, in all first-tier subcontracts exceeding the simplified acquisition threshold in Part 2 of the Federal Acquisition Regulation, except those for commercial items or components.

(h) Pursuant to 10 U.S.C. 2408(c), defense contractors and subcontractors may obtain information as to whether a particular person has been convicted of fraud or any other felony arising out of a contract with the DoD by contacting The Office of Justice Programs, The Denial of Federal Benefits Office, U.S. Department of Justice, telephone (202) 616-3507.

(End of clause)

252.204-7004 REQUIRED CENTRAL CONTRACTOR REGISTRATION (MAR 2000)

(a) Definitions.

As used in this clause--

(1) Central Contractor Registration (CCR) database means the primary DoD repository for contractor information required for the conduct of business with DoD.

(2) Data Universal Numbering System (DUNS) number means the 9-digit number assigned by Dun and Bradstreet Information Services to identify unique business entities.

(3) Data Universal Numbering System +4 (DUNS+4) number means the DUNS number assigned by Dun and Bradstreet plus a 4-digit suffix that may be assigned by a parent (controlling) business concern. This 4-digit suffix may be assigned at the discretion of the parent business concern for such purposes as identifying subunits or affiliates of the parent business concern.

(4) Registered in the CCR database means that all mandatory information, including the DUNS number or the DUNS+4 number, if applicable, and the corresponding Commercial and Government Entity (CAGE) code, is in the CCR database; the DUNS number and the CAGE code have been validated; and all edits have been successfully completed.

(b)(1) By submission of an offer, the offeror acknowledges the requirement that a prospective awardee must be registered in the CCR database prior to award, during performance, and through final payment of any contract resulting from this solicitation, except for awards to foreign vendors for work to be performed outside the United States.

(2) The offeror shall provide its DUNS or, if applicable, its DUNS+4 number with its offer, which will be used by the Contracting Officer to verify that the offeror is registered in the CCR database.

(3) Lack of registration in the CCR database will make an offeror ineligible for award.

(4) DoD has established a goal of registering an applicant in the CCR database within 48 hours after receipt of a complete and accurate application via the Internet. However, registration of an applicant submitting an application through a method other than the Internet may take up to 30 days. Therefore, offerors that are not registered should consider applying for registration immediately upon receipt of this solicitation.

(c) The Contractor is responsible for the accuracy and completeness of the data within the CCR, and for any liability resulting from the Government's reliance on inaccurate or incomplete data. To remain registered in the CCR database after the initial registration, the Contractor is required to confirm on an annual basis that its information in the CCR database is accurate and complete.

(d) Offerors and contractors may obtain information on registration and annual confirmation requirements by calling 1-888-227-2423, or via the Internet at http://www.ccr2000.com.

(End of clause)

252.209-7004 SUBCONTRACTING WITH FIRMS THAT ARE OWNED OR CONTROLLED BY THE GOVERNMENT OF A TERRORIST COUNTRY (MAR 1998)

(a) Unless the Government determines that there is a compelling reason to do so, the Contractor shall not enter into any subcontract in excess of $25,000 with a firm, or subsidiary of a firm, that is identified, on the List of Parties Excluded from Federal Procurement and Nonprocurement Programs, as being ineligible for the award of Defense contracts or subcontracts because it is owned or controlled by the government of a terrorist country.

(b) A corporate officer or a designee of the Contractor shall notify the Contracting Officer, in writing, before entering into a subcontract with a party that is identified, on the List of Parties Excluded from Federal Procurement and Nonprocurement Programs, as being ineligible for the award of Defense contracts or subcontracts because it is owned or controlled by the government of a terrorist country. The notice must include the name of the proposed subcontractor notwithstanding its inclusion on the List of Parties Excluded From Federal Procurement and Nonprocurement Programs.

252.223-7001 HAZARD WARNING LABELS (DEC 1991)

(a) "Hazardous material," as used in this clause, is defined in the Hazardous Material Identification and Material Safety Data clause of this contract.

(b) The Contractor shall label the item package (unit container) of any hazardous material to be delivered under this contract in accordance with the Hazard Communication Standard (29 CFR 1910.1200 et seq). The Standard requires that the hazard warning label conform to the

requirements of the standard unless the material is otherwise subject to the labeling requirements of one of the following statutes:

(1) Federal Insecticide, Fungicide and Rodenticide Act;

(2) Federal Food, Drug and Cosmetics Act;

(3) Consumer Product Safety Act;

(4) Federal Hazardous Substances Act; or

(5) Federal Alcohol Administration Act.

(c) The Offeror shall list which hazardous material listed in the Hazardous Material Identification and Material Safety Data clause of this contract will be labeled in accordance with one of the Acts in paragraphs (b)(1) through
(5) of this clause instead of the Hazard Communication Standard. Any hazardous material not listed will be interpreted to mean that a label is required in accordance with the Hazard Communication Standard.

MATERIAL (If None, Insert "None.")	ACT
_____	_____
_____	_____

(d) The apparently successful Offeror agrees to submit, before award, a copy of the hazard warning label for all hazardous materials not listed in paragraph (c) of this clause. The Offeror shall submit the label with the Material Safety Data Sheet being furnished under the Hazardous Material Identification and Material Safety Data clause of this contract.

(e) The Contractor shall also comply with MIL-STD-129, Marking for Shipment and Storage (including revisions adopted during the term of this contract).

(End of clause)

252.223-7004 DRUG-FREE WORK FORCE (SEP 1988)

(a) Definitions.

(1) "Employee in a sensitive position," as used in this clause, means an employee who has been granted access to classified information; or employees in other positions that the Contractor determines involve national security; health or safety, or functions other than the foregoing requiring a high degree of trust and confidence.

(2) "Illegal drugs," as used in this clause, means controlled substances included in Schedules I and II, as defined by section 802(6) of title 21 of the United States Code, the possession of which

is unlawful under chapter 13 of that Title. The term "illegal drugs" does not mean the use of a controlled substance pursuant to a valid prescription or other uses authorized by law.

(b) The Contractor agrees to institute and maintain a program for achieving the objective of a drug-free work force. While this clause defines criteria for such a program, contractors are encouraged to implement alternative approaches comparable to the criteria in paragraph (c) that are designed to achieve the objectives of this clause.

(c) Contractor programs shall include the following, or appropriate alternatives:

(1) Employee assistance programs emphasizing high level direction, education, counseling, rehabilitation, and coordination with available community resources;

(2) Supervisory training to assist in identifying and addressing illegal drug use by Contractor employees;

(3) Provision for self-referrals as well as supervisory referrals to treatment with maximum respect for individual confidentiality consistent with safety and security issues;

(4) Provision for identifying illegal drug users, including testing on a controlled and carefully monitored basis. Employee drug testing programs shall be established taking account of the following:

(i) The Contractor shall establish a program that provides for testing for the use of illegal drugs by employees in sensitive positions. The extent of and criteria for such testing shall be determined by the Contractor based on considerations that include the nature of the work being performed under the contract, the employee's duties, and efficient use of Contractor resources, and the risks to health, safety, or national security that could result from the failure of an employee adequately to discharge his or her position.

(ii) In addition, the Contractor may establish a program for employee drug testing--

(A) When there is a reasonable suspicion that an employee uses illegal drugs; or

(B) When an employees has been involved in an accident or unsafe practice;

(C) As part of or as a follow-up to counseling or rehabilitation for illegal drug use;

(D) As part of a voluntary employee drug testing program.

(iii) The Contractor may establish a program to test applicants for employment for illegal drug use.

(iv) For the purpose of administering this clause, testing for illegal drugs may be limited to those substances for which testing is prescribed by section 2..1 of subpart B of the "Mandatory

Guidelines for Federal Workplace Drug Testing Programs" (53 FR 11980 (April 11, 1988), issued by the Department of Health and Human Services.

(d) Contractors shall adopt appropriate personnel procedures to deal with employees who are found to be using drugs illegally. Contractors shall not allow any employee to remain on duty or perform in a sensitive position who is found to use illegal drugs until such times as the Contractor, in accordance with procedures established by the Contractor, determines that the employee may perform in such a position.

(e) The provisions of this clause pertaining to drug testing program shall not apply to the extent that are inconsistent with state or local law, or with an existing collective bargaining agreement; provided that with respect to the latter, the Contractor agrees those issues that are in conflict will be a subject of negotiation at the next collective bargaining session.

(End of clause)

252.225-7031 SECONDARY ARAB BOYCOTT OF ISRAEL (JUN 1992)

(a) Definitions. As used in this clause--

(1) "Foreign person" means any person other than a United States person as defined in Section 16(2) of the Export Administration Act of 1979 (50 U.S.C. App. Sec 2415).

(2) "United States person" is defined in Section 16(2) of the Export Administration Act of 1979 and means any United States resident or national (other than an individual resident outside the United States and employed by other than a United States person), any domestic concern (including any permanent domestic establishment of any foreign concern), and any foreign subsidiary or affiliate (including any permanent foreign establishment) of any domestic concern which is controlled in fact by such domestic concerns, as determined under regulations of the President.

(b) Certification. By submitting this offer, the Offeror, if a foreign person, company or entity, certifies that it--

(1) Does not comply with the Secondary Arab Boycott of Israel; and

(2) Is not taking or knowingly agreeing to take any action, with respect to the Secondary Boycott of Israel by Arab countries, which 50 U.S.C. App. Sec 2407(a) prohibits a United States person from taking.

(End of clause)

252.227-7033 RIGHTS IN SHOP DRAWINGS (APR 1966)

(a) Shop drawings for construction means drawings, submitted to the Government by the Construction Contractor, subcontractor or any lower-tier subcontractor pursuant to a construction contract, showing in detail (i) the proposed fabrication and assembly of structural elements and (ii) the installation (i.e., form, fit, and attachment details) of materials or equipment. The Government may duplicate, use, and disclose in any manner and for any purpose shop drawings delivered under this contract.

(b) This clause, including this paragraph (b), shall be included in all subcontracts hereunder at any tier.

252.231-7000 SUPPLEMENTAL COST PRINCIPLES (DEC 1991)

When the allowability of costs under this contract is determined in accordance with part 31 of the Federal Acquisition Regulation (FAR), allowability shall also be determined in accordance with part 231 of the Defense FAR Supplement, in effect on the date of this contract.

252.236-7000 MODIFICATION PROPOSALS - PRICE BREAKDOWN (DEC 1991)

(a) The Contractor shall furnish a price breakdown, itemized as required and within the time specified by the Contracting Officer, with any proposal for a contract modification.

(b) The price breakdown --

(1) Must include sufficient detail to permit an analysis of profit, and of all costs for --

(i) Material;

(ii) Labor;

(iii) Equipment;

(iv) Subcontracts; and

(v) Overhead; and

(2) Must cover all work involved in the modification, whether the work was deleted, added, or changed.

(c) The Contractor shall provide similar price breakdowns to support any amounts claimed for subcontracts.

(d) The Contractor’s proposal shall include a justification for any time extension proposed.

252.236-7008 CONTRACT PRICES - BIDDING SCHEDULES (DEC 1991)

(a) The Government's payment for the items listed in the Bidding Schedule shall constitute full compensation to the Contractor for --

(1) Furnishing all plant, labor, equipment, appliances, and materials; and

(2) Performing all operations required to complete the work in conformity with the drawings and specifications.

(b) The Contractor shall include in the prices for the items listed in the Bidding Schedule all costs for work in the specifications, whether or not specifically listed in the Bidding Schedule.

252.243-7001 PRICING OF CONTRACT MODIFICATIONS (DEC 1991)

When costs are a factor in any price adjustment under this contract, the contract cost principles and procedures in FAR part 31 and DFARS part 231, in effect on the date of this contract, apply.

252.247-7023 TRANSPORTATION OF SUPPLIES BY SEA (MAR 2000)

(a) Definitions. As used in this clause --

(1) "Components" means articles, materials, and supplies incorporated directly into end products at any level of manufacture, fabrication, or assembly by the Contractor or any subcontractor.

(2) "Department of Defense" (DoD) means the Army, Navy, Air Force, Marine Corps, and defense agencies.

(3) "Foreign flag vessel" means any vessel that is not a U.S.-flag vessel.

(4) "Ocean transportation" means any transportation aboard a ship, vessel, boat, barge, or ferry through international waters.

(5) "Subcontractor" means a supplier, materialman, distributor, or vendor at any level below the prime contractor whose contractual obligation to perform results from, or is conditioned upon, award of the prime contract and who is performing any part of the work or other requirement of the prime contract.

(6) "Supplies" means all property, except land and interests in land, that is clearly identifiable for

eventual use by or owned by the DoD at the time of transportation by sea.

(i) An item is clearly identifiable for eventual use by the DoD if, for example, the contract documentation contains a reference to a DoD contract number or a military destination.

(ii) "Supplies" includes (but is not limited to) public works; buildings and facilities; ships; floating equipment and vessels of every character, type, and description, with parts, subassemblies, accessories, and equipment; machine tools; material; equipment; stores of all kinds; end items; construction materials; and components of the foregoing.

(7) "U.S.-flag vessel" means a vessel of the United States or belonging to the United States, including any vessel registered or having national status under the laws of the United States.

(b)(1) The Contractor shall use U.S.-flag vessels when transporting any supplies by sea under this contract.

(2) A subcontractor transporting supplies by sea under this contract shall use U.S.-flag vessels if--

(i) This contract is a construction contract; or

(ii) The supplies being transported are--

(A) Noncommercial items; or

(B) Commercial items that--

(1) The Contractor is reselling or distributing to the Government without adding value (generally, the Contractor does not add value to items that it contracts for f.o.b. destination shipment);

(2) Are shipped in direct support of U.S. military contingency operations, exercises, or forces deployed in humanitarian or peacekeeping operations; or

(3) Are commissary or exchange cargoes transported outside of the Defense Transportation System in accordance with 10 U.S.C. 2643.

(c) The Contractor and its subcontractors may request that the Contracting Officer authorize shipment in foreign-flag vessels, or designate available U.S.-flag vessels, if the Contractor or a subcontractor believes that --

(1) U.S.-flag vessels are not available for timely shipment;

(2) The freight charges are inordinately excessive or unreasonable; or

(3) Freight charges are higher than charges to private persons for transportation of like goods.

(d) The Contractor must submit any request for use of other than U.S.-flag vessels in writing to the Contracting Officer at least 45 days prior to the sailing date necessary to meet its delivery schedules. The Contracting Officer will process requests submitted after such date(s) as expeditiously as possible, but the Contracting Officer's failure to grant approvals to meet the shipper's sailing date will not of itself constitute a compensable delay under this or any other clause of this contract. Requests shall contain at a minimum --

(1) Type, weight, and cube of cargo;

(2) Required shipping date;

(3) Special handling and discharge requirements;

(4) Loading and discharge points;

(5) Name of shipper and consignee;

(6) Prime contract number; and

(7) A documented description of efforts made to secure U.S.-flag vessels, including points of contact (with names and telephone numbers) with at least two U.S.-flag carriers contacted. Copies of telephone notes, telegraphic and facsimile message or letters will be sufficient for this purpose.

(e) The Contractor shall, within 30 days after each shipment covered by this clause, provide the Contracting Officer and the Division of National Cargo, Office of Market Development, Maritime Administration, U.S. Department of Transportation, Washington, DC 20590, one copy of the rated on board vessel operating carrier's ocean bill of lading, which shall contain the following information --

(1) Prime contract number;

(2) Name of vessel;

(3) Vessel flag of registry;

(4) Date of loading;

(5) Port of loading;

(6) Port of final discharge;

(7) Description of commodity;

(8) Gross weight in pounds and cubic feet if available;

(9) Total ocean freight in U.S. dollars; and

(10) Name of the steamship company.

(f) The Contractor agrees to provide with its final invoice under this contract a representation that to the best of its knowledge and belief --

(1) No ocean transportation was used in the performance of this contract;

(2) Ocean transportation was used and only U.S.-flag vessels were used for all ocean shipments under the contract;

(3) Ocean transportation was used, and the Contractor had the written consent of the Contracting Officer for all non-U.S.-flag ocean transportation; or

(4) Ocean transportation was used and some or all of the shipments were made on non-U.S.-flag vessels without the written consent of the Contracting Officer. The Contractor shall describe these shipments in the following format:

ITEM DESCRIPTION	CONTRACT LINE ITEMS	QUANTITY

TOTAL_____

(g) If the final invoice does not include the required representation, the Government will reject and return it to the Contractor as an improper invoice for the purposes of the Prompt Payment clause of this contract. In the event there has been unauthorized use of non-U.S.-flag vessels in the performance of this contract, the Contracting Officer is entitled to equitably adjust the contract, based on the unauthorized use.

(h) The Contractor shall include this clause, including this paragraph (h), in all subcontractors under this contract that--

(1) Exceed the simplified acquisition threshold in Part 2 of the Federal Acquisition Regulation; and

(2) Are for a type of supplies described in paragraph (b)(3) of this clause.

(End of clause)

252.247-7024 NOTIFICATION OF TRANSPORTATION OF SUPPLIES BY SEA (MAR 2000)

(a) The Contractor has indicated by the response to the solicitation provision, Representation of Extent of Transportation by Sea, that it did not anticipate transporting by sea any supplies. If, however, after the award of this contract, the Contractor learns that supplies, as defined in the Transportation of Supplies by Sea clause of this contract, will be transported by sea, the Contractor --

(1) Shall notify the Contracting Officer of that fact; and

(2) Hereby agrees to comply with all the terms and conditions of the Transportation of Supplies by Sea clause of this contract.

(b) The Contractor shall include this clause; including this paragraph (b), revised as necessary to reflect the relationship of the contracting parties--

(1) In all subcontracts under this contract, if this contract is a construction contract; or

(2) If this contract is not a construction contract, in all subcontracts under this contract that are for--

(i) Noncommercial items; or

(ii) Commercial items that--

(A) The Contractor is reselling or distributing to the Government without adding value (generally, the Contractor does not add value to items that it subcontracts for f.o.b. destination shipment);

(B) Are shipped in direct support of U.S. military contingency operations, exercises, or forces deployed in humanitarian or peacekeeping operations; or

(C) Are commissary or exchange cargoes transported outside of the Defense Transportation System in accordance with 10 U.S.C. 2643.

(End of clause)

END OF SECTION 00700

DITCH 10 CULVERT
CULVERT PLACEMENT
MISSISSIPPI COUNTY, ARKANSAS
SECTION 00800

SPECIAL CONTRACT REQUIREMENTS

TABLE OF CONTENTS

Para No.	Paragraph Title	Page No.
1.1	Commencement, Prosecution, and Completion of Work	00800-1
1.2	Exclusion Periods in Computing Completion Schedules (Not Used).	00800-1
1.3	Liquidated Damages-Construction	00800-1
1.4	Exception to Liquidated Damages	00800-1
1.5	Contract Drawings and Specifications	00800-1
1.6	Physical Data	00800-3
1.7	Rights-of-way	00800-3
1.8	Layout of Work	00800-4
1.9	Quantity Surveys (Not Used).	00800-4
1.10	Quantity Surveys-Alternate I	00800-4
1.11	Progress Chart	00800-5
1.12	Safety-Related Special Requirements	00800-5
1.13	Basis for Settlement of Proposals	00800-8
1.14	Certificates of Compliance	00800-8
1.15	Contractor's Certificate	00800-9
1.16	Shop Drawings	00800-9
1.17	As-Built Drawings	00800-9
1.18	Damage to Work	00800-10
1.19	Notification of Area Engineer Before Beginning Work	00800-10
1.20	Equipment Ownership and Operating Expense Schedule	00800-10
1.21	Retesting of Construction Materials	00800-11
1.22	Vehicle Weight Limitations	00800-11
1.23	Obstructions	00800-11
1.24	National Pollutant Discharge Elimination System (NPDES) (Not Used)	00800-12
1.25	Performance of Work by the Contractor	00800-13
1.26	Continuing Contracts	00800-13
1.27	Acceptance Sections (Not Used).	00800-14
1.28	Time Extensions for Unusually Severe Weather	00800-14

Para No.	Paragraph Title	Page No.
1.29	Payment for Mobilization and Demobilization	00800-15
1.30	Stone Sources	00800-16
1.31	Field Office Building	00800-16
1.32	Submittals (Not Used).	00800-17
1.33	Haul Roads (Not Used).	00800-17
1.34	Temporary Project Fencing	00800-17
1.35	Maintenance of Traffic	00800-17
1.36	Cooperation with Others (Not Used).	00800-17
1.37	Hours of Work (Not Used).	00800-17
1.38	Sunday, Holiday and Night Work	00800-17
1.39	Security Requirements (Not Used).	00800-17
1.40	Insurance Requirements for Work on Government Property (Not Used).	00800-17
1.41	Storage of Equipment and Materials	00800-17
1.42	Warranty of Construction	00800-18
1.43	Utility Services	00800-19
1.44	Commercial Warranty	00800-19
1.45	Payment for Material Stored Offsite (Not Used).	00800-19
1.46	Work in Quarantined Area (Not Used).	00800-19
1.47	Work on or Adjacent to Railroad Property (Not Used).	00800-19
1.48	Insurance Requirements for Work on or Adjacent to Railroad Property (Not Used).	00800-19
1.49	Control of Water Levels (Not Used).	00800-19
1.50	Flood Emergency	00800-19
1.51	Patents, Proprietary Rights (Not Used).	00800-20
1.52	Protection of Materials and Work	00800-20
1.53	Existing Flood Protection	00800-20
1.54	Final Acceptance (Not Used).	00800-20
1.55	Obstruction of Navigable Waterways (Not Used).	00800-21
1.56	Dredge Size (Not Used).	00800-21
1.57	Signal Lights (Not Used).	00800-21
1.58	Inspection (Not Used).	00800-21
1.59	Designated Billing Office	00800-21
1.60	Year 2000 Compliance (Not Used)	00800-21

DITCH 10 CULVERT
CULVERT PLACEMENT
MISSISSIPPI COUNTY, ARKANSAS

SECTION 00800 - SPECIAL CONTRACT REQUIREMENTS

1.1. COMMENCEMENT, PROSECUTION, AND COMPLETION OF WORK (APR 1984). The Contractor shall be required to (a) commence work under this contract within 10 calendar days after the date the Contractor receives the notice to proceed, (b) prosecute the work diligently, and (c) complete the entire work ready for use not later than 180 calendar days after the date of receipt by him of notice to proceed. The time stated for completion shall include final cleanup of the premises. (FAR 52.211-10)

1.2. EXCLUSION PERIODS IN COMPUTING COMPLETION SCHEDULES. No work will be required during the period between 1 December and 31 May, inclusive. This period has not been considered in computing the time allowed for completion in accordance with paragraph 1.1 above. The Contractor may, however, perform work during all or any part of the non-work period provided that he has received prior approval therefor, in writing, from the Contracting Officer. In the event that the Contractor's operations are suspended at the beginning of or during this period, the Contracting Officer reserves the right to direct the Contractor to restore the work area to at least the level of flood protection existing prior to the Contractor's operations in the area, in accordance with the procedures of paragraph 1.50 or 1.53 as applicable, all at no additional cost to the Government.

1.3. LIQUIDATED DAMAGES-CONSTRUCTION (Sept 2000).

(a) If the Contractor fails to complete the work within the time specified in the contract, the Contractor shall pay liquidated damages to the Government in the amount of $410.00 for each calendar day of delay until the work is completed or accepted.

(b) If the Government terminates the Contractor's right to proceed, liquidated damages will continue to accrue until the work is completed. These liquidated damages are in addition to excess costs of repurchase under the Termination clause.

1.4. EXCEPTION TO LIQUIDATED DAMAGES. The Contractor's obligations specified in Section 02935 – Turf are exempt from liquidated damages.

1.5. CONTRACT DRAWINGS AND SPECIFICATIONS (AUG 2000).

a. The Government will provide to the Contractor, without charge, one set of contract drawings and specifications, except publications incorporated into the technical provisions by reference, in electronic or paper media as chosen by the Contracting Officer.

b. The Contractor shall--

(1) Check all drawings immediately;

(2) Compare all drawings and verify the figures before laying out the work;

(3) Promptly notify the Contracting Officer of any discrepancies;

(4) Be responsible for any errors which might have been avoided by complying with this paragraph b; and

(5) Reproduce and print contract drawings and specifications as needed.

c. In general-

(1) Large-scale drawings shall govern small-scale drawings; and

(2) The Contractor shall follow figures marked on drawings in preference to scale measurements.

d. Omissions from the drawings or specifications or the misdescription of details of work that are manifestly necessary to carry out the intent of the drawings and specifications, or that are customarily performed, shall not relieve the Contractor from performing such omitted or misdescribed details of the work. The Contractor shall perform such details as if fully and correctly set forth and described in the drawings and specifications.

e. The work shall conform to the specifications and the contract drawings identified on the following index of drawings:

DITCH 10 CULVERT
CULVERT PLACEMENT
MISSISSIPPI COUNTY, ARKANSAS
ST. FRANCIS BASIN-CONSTRUCTION

INDEX TO DRAWINGS
FILE NUMBER: 001A0673 TO 015A0673, 001A0197

TITLE	DRAWING NUMBER
MAPS AND INDEX	1
GENERAL PLAN	2
PLAN AND SECTIONS	3
EXCAVATION PLAN AND SECTIONS	4
EARTHWORK SECTIONS	5
EARTHWORK SECTIONS	6
GATEWELL-MASONRY	7
GATEWELL- REINFORCEMENT	8
GATEWELL- REINFORCEMENT	9

OUTLET STRUCTURE - MASONRY	10
OUTLET STRUCTURE - REINFORCEMENT	11
WALL DRAIN DETAILS	12
MISCELLANEOUS METALS	13
GATE OPERATOR DETAILS	14
BORING LOGS	15
STANDARD BORING LEGEND	BL-1

(DFARS 252.236-7001)

1.6. PHYSICAL DATA (APR 1984). Data and information furnished or referred to below are for the Contractor's information. The Government shall not be responsible for any interpretation of or conclusion drawn from the data or information by the Contractor.

a. The indications of physical conditions on the drawings and in the specifications are the result of site investigations by aerial photographs and topographic surveys.

b. Weather Conditions. Information with respect to temperatures and precipitation may be obtained from the National Weather Service. Also see paragraph 1.28, "Time Extensions for Unusually Severe Weather".

c. Additional Data. Additional data consisting of river stage records may be available for inspection at the U.S. Army Engineer District, Memphis, Tennessee. (FAR 52.236-4)

1.7 RIGHTS-OF-WAY.

a. The rights-of-way and easements for the work to be constructed under this contract within the limits indicated on the drawings will be provided by the Government without cost to the Contractor. However, the Contractor shall make his own arrangements with the appropriate owners or organizations for transporting his equipment across, over or under railroad tracks, highways, bridges, private property, and utility lines and shall provide at his own expense any additional right-of-way or easements required to effect such crossings, including insurance requirements of owners. Limits of right-of-way that will be provided by the Government are as indicated on the drawings.

b. The Contractor shall, upon reasonable notice, without expense to the Government and at any time during the progress of the work when not being actively used for contract operations, promptly vacate and clean up any part of the Government grounds that have been allotted to or have been in use by him when directed to do so by the Contracting Officer.

c. The Contractor shall not obstruct any existing roads on the lands controlled by the United States except with the permission of the Contracting Officer, and shall maintain such roads in as good condition as exists at the time of commencement of the work.

d. Any additional right-of-way required for access or for the Contractor's method of

operation must be obtained by and at the expense of the Contractor. The Contractor shall submit written evidence to the Contracting Officer that he has obtained the rights-of-way from the property owners. The written evidence shall consist of an authenticated copy of the conveyance under which the Contractor acquired the rights-of-way, prepared and executed in accordance with the laws of the State of Arkansas. If temporary rights are obtained by the Contractor, the period of time shall coincide with paragraph 1.1, "Commencement, Prosecution, and Completion of Work", of the SPECIAL CONTRACT REQUIREMENTS, plus a reasonable time for any extension granted for completion of the work. The Contractor shall be solely responsible for any and all damages, claims for damages, and liability of any nature whatsoever arising from or growing out of the use of rights-of-way other than those rights-of-way furnished by the Government.

e. The Contractor shall repair, at his own expense, any and all damage to the existing roads when such damage is a result of his operations on this contract. The Contractor shall also replace, at his own expense, any and all surfacing displaced or damaged by his operations on this contract. The repairs and/or replacement shall be done to the satisfaction of the Contracting Officer.

1.8. LAYOUT OF WORK.

a. The Contractor will re-establish the following baselines and bench marks at the site of the work:

(1) Baselines as shown on the drawings.

(2) Bench marks as shown on the drawings.

b. From the baselines and bench marks established by the Government, the Contractor shall complete the layout of the work and shall be responsible for all measurements that may be required for the execution of the work to the location and limit marks prescribed in the specifications or on the contract drawings, subject to such modifications as the Contracting Officer may require to meet changed conditions or as a result of necessary modifications to the contract work.

c. The Contractor shall furnish, at his own expense, such stakes, templates, platforms, equipment, tools and materials, and all labor as may be required in laying out any part of the work from the baselines and bench marks established by the Government. It shall be the responsibility of the Contractor to maintain and preserve all stakes and marks established by the Contracting Officer until authorized to remove them, and if such marks are destroyed, by the Contractor or through his negligence, prior to their authorized removal, they may be replaced by the Contracting Officer, at his discretion, and the expense of replacement will be deducted from any amounts due or to become due the Contractor. The Contracting Officer may require that work be suspended at any time when location and limit marks established by the Contractor are not reasonably adequate to permit checking of the work.

1.9. QUANTITY SURVEYS (APR 1984). (NOT USED).

1.10. QUANTITY SURVEYS-ALTERNATE I (APR 1984).

a. Quantity surveys shall be conducted, and the data derived from these surveys shall be used in computing the quantities of work performed and the actual construction completed and in place.

b. The Contractor shall conduct the original and final surveys for any periods for which progress payments are requested. All these surveys shall be conducted under the direction of a representative of the Contracting Officer, unless the Contracting Officer waives this requirement in a specific instance. The Government shall make such computations as are necessary to determine the quantities of work performed or finally in place. The Contractor shall make the computations based on the surveys for any periods for which progress payments are requested.

c. Promptly upon completing a survey, the Contractor shall furnish the originals of all field notes and all other records relating to the survey or to the layout of the work to the Contracting Officer, who shall use them as necessary to determine the amount of progress payments. The Contractor shall retain copies of all such material furnished to the Contracting Officer. (FAR 52.236-16)

d. Quantity surveys as used in this clause means a topographical survey accomplished by ground methods requiring the use of a total station instrument with the display output recorded and stored in an electronic field book for further calculations in a computer. The Contractor shall furnish the electronic data in an Intergraph or PacSoft format to the Contracting Officer.

e. Quantity Survey Method. The cross-section method shall be used to obtain topography. Cross-section spacing will depend upon the terrain but shall not exceed 100 feet. All breaks in slope shall be recorded along the cross-section with a maximum distance 25 feet between observations.

f. Quantity Survey Limits. After clearing of vegetation and trees, the topographic survey shall extend to 50 feet beyond the limits of work or to the Right-of-Way limits as shown on the drawings.

1.11. PROGRESS CHART. The schedule of work will be in accordance with the progress chart. The progress chart required by provisions of paragraph (a) of the CONTRACT CLAUSE entitled "Schedules for Construction Contracts" shall be prepared on ENG Form 2454, copies of which will be furnished to the Contractor by the Government. THREE COPIES OF THE SCHEDULE WILL BE REQUIRED.

1.12. SAFETY-RELATED SPECIAL REQUIREMENTS. ALL WORK UNDER THIS CONTRACT SHALL COMPLY WITH THE LATEST VERSION OF U.S. ARMY CORPS OF ENGINEERS SAFETY AND HEALTH REQUIREMENTS MANUAL, EM 385-1-1, AND OCCUPATIONAL SAFETY AND HEALTH ACT (OSHA) STANDARDS IN EFFECT ON THE DATE OF THE SOLICITATION. NO SEPARATE PAYMENT WILL BE MADE FOR COMPLIANCE WITH EM 385-1-1, NOR FOR COMPLIANCE WITH ANY OF THE OTHER SAFETY-RELATED SPECIAL REQUIREMENTS.

a. Accident Investigations and Reporting. Refer to EM 385-1-1, Section 1. Accidents shall be investigated and reports completed by the immediate supervisor of the employee(s) involved and

reported to the Contracting Officer or his representative within one working day after the accident occurs.

b. Accident Prevention Program. Refer to the CONTRACT CLAUSE entitled, "Accident Prevention (Alternate I)". Within 21 calendar days after receipt of Notice of Award of the contract, four copies of the Accident Prevention Program shall be submitted to the Contracting Officer for review and approval. The program shall be prepared in the following format:

(1) An executed LMV Form 358R, Administrative Plan (available upon request).

(2) An executed LMV Form 359R, Activity Hazard Analysis (available upon request).

(3) A copy of company policy statement regarding accident prevention.

(4) When marine plant and equipment are in use under a contract, the method of fuel oil transfer shall be submitted on LMV Form 414R, Fuel Oil Transfer, (available upon request). (Refer to 33 CFR 156.)

The Contractor shall not commence physical work at the site until the Contracting Officer, or his authorized representative has approved the program. At the Contracting Officer's discretion, the Contractor may submit his Activity Hazard Analysis for only the first phase of construction provided that it is accompanied by an outline of the remaining phases of construction. All remaining phases shall be submitted and accepted prior to the beginning of work in each phase. Also refer to Section 1 of EM 385-1-1.

c. Daily Inspections. The Contractor shall perform daily safety inspections and record them on the forms approved by the Contracting Officer. Reports of daily inspections shall be maintained at the jobsite. The reports shall be records of the daily inspections and resulting actions. Each report will include, as a minimum, the following:

(1) Phase(s) of construction underway during the inspection.

(2) Locations or areas inspections were made.

(3) Results of inspection, including nature of deficiencies observed and corrective actions taken, or to be taken, date, and signature of the person responsible for its contents.

d. Machinery and Mechanized Equipment. Machinery and mechanized equipment used under this contract shall comply with the following:

(1) When mechanized equipment is operated on floating plant, the Contractor shall provide positive and acceptable means of preventing this equipment from moving or falling into the water. The type of equipment addressed by this clause includes front-end loaders, bulldozers, trucks (both on- and off-road), backhoes, track hoes, and similar equipment. If the Contractor plans to use such equipment on floating plant, an activity hazard analysis must be developed for this feature of

work. The plan must include a detailed explanation of the type or types of physical barriers, curbs, structures, etc., which will be incorporated to protect the operator and prevent the equipment from entering the water. Nonstructural warning devices may be considered for situations where the use of structural barriers is determined to be impracticable. The activity hazard analysis must thoroughly address the procedure and be submitted to the Corps for review and acceptance prior to start of this feature of work.

(2) The stability of crawler, truck, and wheel-mounted cranes shall be assured.

(a) The manufacturer's load-rating chart may be used to determine the maximum allowable working load for each particular crane's boom angle provided a test load, with a boom angle of 20 degrees, confirms the manufacturer's load-rating table.

(b) Stability tests are required if:

(i) There is no manufacturer's load-rating chart securely fixed to the operator's cab;

(ii) There has been a change in the boom or other structural members; or

(iii) There has been a change in the counterweight.

The test shall consist of lifting a load with the boom in the least stable undercarriage position and at an angle of 20 degrees above the horizontal. The test shall be conducted under close supervision on a firm, level surface. The load that tilts the machine shall be identified as the test load. The test load moment (in ft-lbs) shall then be calculated by multiplying the horizontal distance (in ft) from the center of rotation of the machine to the test load, times the test load (in lbs). Three-fourths of this test-load moment shall then be used to compute the maximum allowable operating loads for the boom at 20, 40, 60, and 80 degrees above horizontal. From these maximum allowable operating loads, a curve shall be plotted and posted in the cab of the machine in sight of the operator. These values shall not be exceeded except in the performance test described below. The test load shall never exceed 110 percent of the manufacturer's maximum rated capacity.

(c) In lieu of the test and computations above, the crane may be load tested for stability at each of the four boom positions listed above.

(3) Performance tests shall be performed in accordance with Section 16 of EM 385-1-1. Performance tests shall be conducted after each stability test, when the crane is placed in service on a project, and at least every 12 months.

(4) Inspections shall be made which will ensure a safe and economical operation of both cranes and draglines. Specific inspections and their frequencies are listed on the appropriate checklists noted below. Results of inspections and tests for cranes shall be recorded on the Safety Inspection Check List, LMV Form 326R (available upon request), and inspection results for draglines shall be recorded on LMV Form 373R (available upon request). Copies of the inspections

and tests
shall be available at the jobsite for review. The Contracting Officer or his authorized representative shall witness all stability and performance tests on cranes and all complete dragline inspections.

(5) A complete dragline inspection shall be made:

(a) At least annually;

(b) Prior to the dragline being placed in operation; and

(c) After the dragline has been out of service for more than six months.

e. Safety Sign. The Contractor shall furnish, erect, and maintain a safety sign at the site, as located by the Contracting Officer. The sign shall conform to the requirements of this paragraph and the drawing entitled "Safety Sign", included at the end of these Special Contract Requirements. The lettering shall be black and the background white. When placed on floating plant, the sign may be half size. Upon request, the Government will furnish a decal of the Engineer Castle. The sign shall be erected as soon as practicable, but not later than 15 calendar days after the date established for commencement of work. The data required shall be current.

1.13. BASIS FOR SETTLEMENT OF PROPOSALS (JAN 1997). Actual costs will be used to determine equipment costs for a settlement proposal submitted on the total cost basis under FAR 49.206-2(b). In evaluating a terminations settlement proposal using the total cost basis, the following principles will be applied to determine allowable equipment costs:

(1) Actual costs for each piece of equipment, or groups of similar serial or series equipment, need not be available in the Contractor's accounting records to determine total actual equipment costs.

(2) If equipment costs have been allocated to a contract using predetermined rates, those charges will be adjusted to actual costs.

(3) Recorded job costs adjusted for unallowable expenses will be used to determine equipment-operating expenses.

(4) Ownership costs (depreciation) will be determined using the Contractor's depreciation schedule (subject to the provisions of FAR 31.205-11).

(5) License, taxes, storage and insurance costs are normally recovered as an indirect expense and unless the Contractor charges these costs directly to contracts, they will be recovered through the indirect expense rate. (EFARS 52.249-5000)

1.14. CERTIFICATES OF COMPLIANCE. Any certificates required for demonstrating proof of compliance of material with specification requirements shall be executed in four (4) copies. Each certificate shall be signed by an official authorized to certify on behalf of the manufacturing company

and shall contain the name and address of the Contractor, the project name and location, and the quantity and date or dates of shipment or delivery to which the certificates apply. Copies of laboratory test reports submitted with certificates shall contain the name and address of the testing laboratory and the date or dates of the test to which the report applies. Certification shall not be construed as relieving the Contractor from furnishing satisfactory material, if, after tests are performed on selected samples, the material is found not to meet the specific requirements.

1.15. CONTRACTOR'S CERTIFICATE. Each submittal of shop drawings and materials data shall be accompanied by a certificate, signed by the head of the Quality Control Organization of the prime Contractor, that the prime Contractor has reviewed in detail all shop drawings and materials contained in the submittal and that they are correct and in strict conformance with the contract drawings and specifications except as may be otherwise explicitly stated. The Government will first check for the Contractor's certificate and then review and render approval action or indicate disapproval in those cases where contract requirements are not fulfilled.

1.16. SHOP DRAWINGS. The Contractor shall submit to the Contracting Officer for approval 6 copies of all shop drawings as called for under the various headings of these specifications. These drawings shall be complete and detailed. If approved by the Contracting Officer, each copy of the drawings will be identified as having received such approval by being so stamped and dated. The Contractor shall make any correction required by the Contracting Officer. If the Contractor considers any correction indicated on the drawings to constitute a change to the contract drawings or specifications, notice as required under the CONTRACT CLAUSE entitled "Changes", will be given to the Contracting Officer. The Contracting Officer will retain five sets of all shop drawings and one set will be returned to the Contractor. The approval of the drawings by the Contracting Officer shall not be construed as a complete check, but will indicate only that the general method of construction and detailing is satisfactory. Approval of such drawings will not relieve the Contractor of the responsibility for any errors that may exist, as the Contractor shall be responsible for the dimensions and design of adequate connections, details, and satisfactory construction of all work.

1.17. AS-BUILT DRAWINGS. The Contractor shall maintain two (2) full-size sets of the Contract drawings depicting a current record of the work as actually constructed. One set is for the Contractor's use and one for the Government's use. These working as-built drawing redline mark-ups may be manually or electronically generated using the construction plans. These working as-built drawings shall be reviewed at least monthly with the Contracting Officer, prior to the Contractor submitting a request for progress payment. Both shall certify that the as-built drawings are accurate and up-to-date before progress payment is made. Upon completion of the work and not later than 60 days from acceptance, the Contractor shall deliver a complete final set of the as-built red-line marked-up plans depicting the construction as actually accomplished. The final as-built drawings shall be identified as such by marking or stamping them with the words "AS-BUILT DRAWINGS" in letters at least 3/16" high. Those drawings where no change is involved shall be marked or stamped "AS-BUILT, NO CHANGE". Compliance and delivery of the final as-built drawings will be enforced through the approval of final payment. Also, the quality of the final as-built drawings will be reflected in the Contractor's performance evaluation.

1.18. DAMAGE TO WORK. The responsibility for damage to any part of the permanent work shall be as set forth in the CONTRACT CLAUSE entitled "Permits and Responsibilities". However, if, in the judgement of the Contracting Officer, any part of the permanent work performed by the Contractor is damaged by flood, tornado, or earthquake, which damage is not due to the failure of the Contractor to take reasonable precautions or to exercise sound engineering and construction practices in the conduct of the work, the Contractor shall make the repairs as ordered by the Contracting Officer and full compensation for such repairs will be made at the applicable contract unit or lump sum prices as fixed and established in the contract. If, in the opinion of the Contracting Officer, there are no contract unit or lump sum prices applicable to any part of such work, an equitable adjustment pursuant to the CONTRACT CLAUSE entitled "Changes" will be made as full compensation for the repairs of that part of the permanent work for which there are no applicable contract unit or lump sum prices. Except as herein provided, damage to all work (including temporary construction), utilities, materials, equipment and plant shall be repaired to the satisfaction of the Contracting Officer at the Contractor's expense regardless of the cause of such damage.

1.19. NOTIFICATION OF AREA ENGINEER BEFORE BEGINNING WORK. At least 7 days before beginning work, the Contractor shall notify Mr. Donald R. Tutor, Area Engineer, Wynne Area Office, Bennie House Center, 1932 N. Falls Boulevard, P.O. Box 729, Wynne, Arkansas 72396-0729, Telephone No. 901-544-3851 or 870-238-7983. COLLECT CALLS WILL NOT BE ACCEPTED.

1.20. EQUIPMENT OWNERSHIP AND OPERATING EXPENSE SCHEDULE (MAR 1995).

a. This clause does not apply to terminations. See SPECIAL CONTRACT REQUIREMENT entitled, "Basis for Settlement of Proposals" and FAR Part 49.

b. Allowable cost for construction and marine plant and equipment in sound workable condition owned or controlled and furnished by a Contractor or subcontractor at any tier shall be based on actual cost data for each piece of equipment or groups of similar serial and series for which the Government can determine both ownership and operating costs from the Contractor's accounting records. When both ownership and operating costs cannot be determined for any piece of equipment or groups of similar serial or series equipment from the Contractor's accounting records, costs for that equipment shall be based upon the applicable provisions of EP 1110-1-8, Construction Equipment Ownership and Operating Expense Schedule, Region III. Working conditions shall be considered to be average for determining equipment rates using the schedule unless specified otherwise by the Contracting Officer. For equipment not included in the schedule, rates for comparable pieces of equipment may be used or a rate may be developed using the formula provided in the schedule. For forward pricing, the schedule in effect at the time of negotiations shall apply. For retroactive pricing, the schedule in effect at the time the work was performed shall apply.

c. Equipment rental costs are allowable, subject to the provisions of FAR 31.105(d)(2)(ii) and FAR 31.205-36. Rates for equipment rented from an organization under common control, lease-purchase arrangements, and sale-leaseback arrangements, will be determined using the schedule, except that actual rates will be used for equipment leased from an organization under common control that has an established practice of leasing the same or similar equipment to unaffiliated

lessees.

d. When actual equipment costs are proposed and the total amount of the pricing action exceeds the small purchase threshold, the Contracting Officer shall request the Contractor to submit either certified cost or pricing data, or partial/limited data, as appropriate. (EFARS 52.231-5000)

NOTE: THE CONTRACTOR MAY PURCHASE THE EQUIPMENT MANUAL FROM THE GOVERNMENT PRINTING OFFICE. THE GOVERNMENT PRINTING OFFICE TELEPHONE NO. IS 202-512-1800 AND INTERNET ADDRESS IS *http://www.pls.com: 8001/his/cfr.html.*

1.21. RETESTING OF CONSTRUCTION MATERIALS. Unless otherwise specified, where the Technical Specifications state that tests will be performed at the expense of the Government, the cost of only the initial test will be borne by the Government. Any retesting due to failure of the materials to meet the requirements in the initial test or any retesting requested by the Contractor shall be performed at the Contractor's expense. The retests shall be at laboratories approved by the Contracting Officer. The costs of retests made at Government laboratories will be deducted from the total amount due the Contractor.

1.22. VEHICLE WEIGHT LIMITATIONS. Vehicle weight limitations for operation on roads, streets, and bridges may affect the prosecution of work under this contract. The Contractor will be responsible for obtaining all necessary licenses and permits in accordance with the CONTRACT CLAUSE entitled "Permits and Responsibilities".

1.23. OBSTRUCTIONS.

a. Utilities. Any utilities located at the site are to remain in place and operative during construction. The Contractor shall verify the exact location, depth, and height of utilities shown on drawings in the field. At least 10 days before beginning work in the vicinity of a utility, the Contractor shall call the appropriate "Call Before You Dig" number listed below. The Contractor shall exercise special care when working in the vicinity of utilities to prevent damage thereto or injury to the Contractor's employees or others. Any damage to the utilities or interruptions of service occasioned by the Contractor's operations shall be repaired and the service restored promptly at his expense. In the event the Contractor elects to have utilities relocated for his own convenience, he shall make his own arrangement with utility owners for the rerouting and replacement to their permanent location after completion of the work adjacent thereto. All costs associated with utility relocation for the Contractor's convenience shall be at his expense.

CALL BEFORE YOU DIG NUMBERS

Arkansas	1-800-482-8998	
Kentucky		
Louisiana		
Mississippi		
Missouri	1-800-344-7483	(1-800-DIG-RITE)
Tennessee	1-800-351-1111	

b.Mileposts and Gages. The Contractor shall, when necessary to perform the work under this contract, remove all levee mileposts and stage gages encountered within the work limits. After completion of the work, the Contractor shall reinstall the levee mileposts at their proper location and shall reset the stage gages at their correct elevations. Survey notes and records attesting to the locations and elevations of the mileposts and gages shall be furnished to the Contracting Officer. The Contractor shall be responsible for any damage to mileposts and gages caused through his fault or negligence. No separate payment will be made for the removal and restoration of mileposts and gages, and all cost incurred by this clause shall be considered an incidental expense of the Contractor.

1.24. NATIONAL POLLUTANT DISCHARGE ELIMINATION SYSTEM (NPDES) (NOT USED).

1.25. PERFORMANCE OF WORK BY THE CONTRACTOR (APR 1984). The Contractor shall perform on the site, and with its own organization, work equivalent to at least fifteen (15) percent of the total amount of work to be performed under the contract. This percentage may be reduced by a supplemental agreement to this contract if, during performing the work, the Contractor requests a reduction and the Contracting Officer determines that the reduction would be to the advantage of the Government. (FAR 52.236-1)

1.26. CONTINUING CONTRACTS (MAR 1995).

a. This is a continuing contract, as authorized by Section 10 of the River and Harbor Act of September 22, 1922 (33 U.S. Code 621). The payment of some portion of the contract price is dependent upon reservations of funds from future appropriations, and from future contribution to the project having one or more non-federal project sponsors. The responsibilities of the Government are limited by this clause notwithstanding any contrary provision of the "Payments Under Fixed-Price Construction Contracts" clause or any other clause of this contract.

b. The sum of $1,000.00 has been reserved for this contract and is available for payments to the Contractor during the current fiscal year. It is expected that Congress will make appropriations for future fiscal years from which additional funds together with funds provided by one or more non-federal project sponsors will be reserved for this contract.

c. Failure to make payments in excess of the amount currently reserved, or that may be reserved from time to time, shall not entitle the Contractor to a price adjustment under the terms of this contract except as specifically provided in paragraphs "f" and "i" below. No such failure shall constitute a breach of this contract, except that this provision shall not bar a breach-of-contract action if an amount finally determined to be due as a termination allowance remains unpaid for one year due solely to a failure to reserve sufficient additional funds therefor.

d. The Government may at any time reserve additional funds for payments under the contract if there are funds available for such purpose. The Contracting Officer will promptly notify the Contractor of any additional funds reserved for the contract by issuing an administrative modification

to the contract.

e. If earnings will be such that funds reserved for the contract will be exhausted before the end of any fiscal year, the Contractor shall give written notice to the Contracting Officer of the estimated date of exhaustion and the amount of additional funds which will be needed to meet payments due or to become due under the contract during that fiscal year. This notice shall be given not less than 45 or more than 60 days prior to the estimated date of exhaustion.

f. No payments will be made after exhaustion of funds except to the extent that additional funds are reserved for the contract. The Contractor shall be entitled to simple interest on any payment that the Contracting Officer determines was actually earned under the terms of the contract and would have been made except for exhaustion of funds. Interest shall be computed from the time such payment would otherwise have been made until actually or constructively made, and shall be at the rate established by the Secretary of the Treasury pursuant to Public Law 92-41, 85 STAT 97, as in effect on the first day of the delay in such payment.

g. Any suspension, delay, or interruption of work arising from exhaustion or anticipated exhaustion of funds shall not constitute a breach of this contract and shall not entitle the Contractor to any price adjustment under the "Suspension of Work" clause or in any other manner under this contract.

h. An equitable adjustment in performance time shall be made for any increase in the time required for performance of any part of the work arising from exhaustion of funds or the reasonable anticipation of exhaustion of funds.

i. If, upon the expiration of sixty (60) days after the beginning of the fiscal year following an exhaustion of funds, the Government has failed to reserve sufficient additional funds to cover payments otherwise due, the Contractor, by written notice delivered to the Contracting Officer at any time before such additional funds are reserved, may elect to treat his right to proceed with the work as having been terminated. Such a termination shall be considered a termination for the convenience of the Government.

j. If at any time it becomes apparent that the funds reserved for any fiscal year are in excess of the funds required to meet all payments due or to become due the Contractor because of work performed and to be performed under the contract during the fiscal year, the Government reserves the right, after notice to the Contractor, to reduce said reservation by the amount of such excess. (EFARS 52.232-5001)

1.27. ACCEPTANCE SECTIONS. (NOT USED).

1.28. TIME EXTENSIONS FOR UNUSUALLY SEVERE WEATHER (31 OCT 1989).

a. This provision specifies the procedure for determination of time extensions for unusually severe weather in accordance with the CONTRACT CLAUSE entitled "Default (Fixed-Price Construction)". In order for the Contracting Officer to award a time extension under this clause, the

following conditions must be satisfied:

(1) The weather experienced at the project site during the contract period must be found to be unusually severe, that is, more severe than the adverse weather anticipated for the project location during any given month.

(2) The unusually severe weather must actually cause a delay to the completion of the project. The delay must be beyond the control and without the fault or negligence of the Contractor.

b. The following schedule of monthly anticipated adverse weather delays is based on National Oceanic and Atmospheric Administration (NOAA) or similar data for the project location and will constitute the base line for monthly weather time evaluations. The Contractor's progress schedule must reflect these anticipated adverse weather delays in all weather dependent activities.

MONTHLY ANTICIPATED ADVERSE WEATHER DELAY
WORK DAYS BASED ON (6) DAY WORK WEEK

JAN	FEB	MAR	APR	MAY	JUN	JUL	AUG	SEP	OCT	NOV	DEC
(10)	(7)	(4)	(4)	(2)	(3)	(2)	(2)	(2)	(3)	(5)	(7)

c. Upon acknowledgment of the Notice to Proceed (NTP) and continuing throughout the contract, the Contractor will record on the daily CQC report, the occurrence of adverse weather and resultant impact to normally scheduled work. Actual adverse weather delay days must prevent work on critical activities for 50 percent or more of the Contractor's scheduled workday. The number of actual adverse weather delay days shall include days impacted by actual adverse weather (even if adverse weather occurred in previous month), be calculated chronologically from the first to the last day of each month, and be recorded as full days. If the number of actual adverse weather delay days exceeds the number of days anticipated in paragraph b, above, the Contracting Officer will convert any qualifying delays to calendar days, giving full consideration for equivalent fair weather work days, and issue a modification in accordance with the CONTRACT CLAUSE entitled "Default (Fixed-Price Construction)". (ER 415-1-15, Appendix A)

1.29. PAYMENT FOR MOBILIZATION AND DEMOBILIZATION (DEC 1991).

a. The Government will pay all costs for the mobilization and demobilization of all of the Contractor's plant and equipment at the contract lump sum price for this item.

(1) Sixty (60) percent of the lump sum price upon completion of the Contractor's mobilization at the work site.

(2) The remaining forty (40) percent upon completion of demobilization.

b. The Contracting Officer may require the Contractor to furnish cost data to justify this portion of the bid if the Contracting Officer believes that the percentages in paragraphs a(1) and (2) of this clause do not bear a reasonable relation to the cost of the work in this contract.

(1) Failure to justify such price to the satisfaction of the Contracting Officer will result in payment, as determined by the Contracting Officer, of--

(i) Actual mobilization costs at completion of mobilization;

(ii) Actual demobilization costs at completion of demobilization; and

(iii) The remainder of this item in the final payment under this contract.

(2) The Contracting Officer's determination of the actual costs in paragraph b(1) of this clause is not subject to appeal. (DFARS 252.236-7004)

1.30. STONE SOURCES.

a. Stone meeting the requirements of these specifications has been produced from the sources listed below:

Name of Firm	Name of Quarry	Location	Certification Date
Brickeys Stone, LLC	Old Menefee	Bloomsdale, MO	1997
Martin Marietta Aggregates	Three Rivers	Smithland, KY	1996
Meridian Aggregate Co.	Valley Stone	Black Rock, AR	1995
Pine Bluff Sand and Gravel Co.	River Mountain	Delaware, AR	1996
Seminole Stone	Seminole	Dexter, MO	1996
Tower Rock Stone Co.	Bussen	Ste. Genevieve, MO	1995
Tower Rock Stone Co.	Gray's Point	Scott City, MO	1995
Vulcan Materials Co.	Gilbertsville	Lake City, KY	1996
Vulcan Materials Co.	Parsons	Parsons, TN	1996
Vulcan Materials Co.	Verkler	Black Rock, AR	1996

b. Stone may be furnished either from any of the listed sources or from any other sources designated by the Contractor and accepted by the Contracting Officer, subject to the conditions hereinafter stated.

c. After the award of the contract, the Contractor shall designate in writing only one source or one combination of sources from which he proposes to furnish stone. If the Contractor proposes to furnish stone from a source or sources not listed above, he may designate only a single source for stone. Samples for acceptance testing shall be provided as required in the Technical Specifications. If a source for stone so designated by the Contractor is not accepted by the Contracting Officer for use, the Contractor may not propose other sources but shall furnish the stone from a listed source at no additional cost to the Government.

d. Acceptance of a source of stone shall not be construed as acceptance of all material from that source. The right is reserved to reject materials from certain localized areas, zones, strata, or channels, when such materials are unsuitable for stone as determined by the Contracting Officer.

Materials produced from a listed source shall meet all the requirements of the Technical Specifications.

1.31. FIELD OFFICE BUILDING.

a. The Contractor shall furnish and maintain a temporary building for the exclusive use of the Government inspectors during the life of the contract. The building shall conform to the following requirements:

Floor Space	Not less than 150 sq. ft.
Height of Ceiling	Not less than 7 feet
Windows	Not less than 4
Doors	At least 1
Type of Floor	Wood or Concrete

The building shall be of light but weatherproof construction. Windows shall be arranged to open and to be fastened from the inside. All door and window openings shall be provided with suitable screens. The door shall be equipped with a durable hasp and padlock. Interior surfaces of exterior walls and ceilings shall be covered with insulating board and an inside storage room of adequate size shall be provided. The Contractor shall furnish an adequate supply of approved drinking water, sufficient electrical outlets for office calculators and equipment, adequate toilet facilities, all electricity required and sufficient fixtures for adequate lighting, and during cold weather shall furnish adequate heat. The field office, its location and all facilities shall be subject to the approval of the Contracting Officer. The building shall also be equipped with air conditioning during hot weather. The office shall be equipped with at least 2 chairs and one desk.

b. No separate payment will be made for furnishing and maintaining the field office. Such building will remain the property of the Contractor and shall be removed upon completion of the work as provided in the CONTRACT CLAUSE entitled "Operations and Storage Areas".

1.32. SUBMITTALS. (NOT USED).

1.33. HAUL ROADS. (NOT USED).

1.34. TEMPORARY PROJECT FENCING. Temporary project fencing as required by Paragraph 04.A.04 of EM 385-1-1 is not required on this project.

1.35. MAINTENANCE OF TRAFFIC. The Contractor shall erect and maintain such signs and barricades, as the Contracting Officer deems appropriate for protection of the traveling public.

1.36. COOPERATION WITH OTHERS. (NOT USED).

1.37. HOURS OF WORK. (NOT USED).

1.38. SUNDAY, HOLIDAY AND NIGHT WORK. Sunday and Holiday work will be at the option

of the Contractor, but night work will not be permitted unless otherwise authorized by the Contracting Officer.

1.39. SECURITY REQUIREMENTS. (NOT USED).

1.40. INSURANCE REQUIREMENTS FOR WORK ON GOVERNMENT PROPERTY. (NOT USED).

1.41. STORAGE OF EQUIPMENT AND MATERIALS. Storage of the Contractor's equipment and materials shall be at those areas within the rights-of-way designated by the Contracting Officer.

1.42. WARRANTY OF CONSTRUCTION (MAR 1994).

a. In addition to any other warranties in this contract, the Contractor warrants, except as provided in paragraph i. of this clause, that work performed under this contract conforms to the contract requirements and is free of any defect in equipment, material, or design furnished, or workmanship performed by the Contractor or any subcontractor or supplier at any tier.

b. This warranty shall continue for a period of 1 year from the date of final acceptance of the work. If the Government takes possession of any part of the work before final acceptance, this warranty shall continue for a period of 1 year from the date the Government takes possession.

c. The Contractor shall remedy at the Contractor's expense any failure to conform, or any defect. In addition, the Contractor shall remedy at the Contractor's expense any damage to Government-owned or controlled real or personal property, when that damage is the result of--

(1) The Contractor's failure to conform to contract requirements; or

(2) Any defect of equipment, material, workmanship, or design furnished.

d. The Contractor shall restore any work damaged in fulfilling the terms and conditions of this clause. The Contractor's warranty with respect to work repaired or replaced will run for 1 year from the date of repair or replacement.

e. The Contracting Officer shall notify the Contractor, in writing, within a reasonable time after the discovery of any failure, defect, or damage.

f. If the Contractor fails to remedy any failure, defect, or damage within a reasonable time after receipt of notice, the Government shall have the right to replace, repair, or otherwise remedy the failure, defect, or damage at the Contractor's expense.

g. With respect to all warranties, express or implied, from subcontractors, manufacturers, or suppliers for work performed and materials furnished under this contract, the Contractor shall--

(1) Obtain all warranties that would be given in normal commercial practice;

(2) Require all warranties to be executed, in writing, for the benefit of the Government, if directed by the Contracting Officer; and

(3) Enforce all warranties for the benefit of the Government, if directed by the Contracting Officer.

h. In the event the Contractor's warranty under paragraph (b) of this clause has expired, the Government may bring suit at its expense to enforce a subcontractor's, manufacturer's, or supplier's warranty.

i. Unless a defect is caused by the negligence of the Contractor or subcontractor or supplier at any tier, the Contractor shall not be liable for the repair of any defects of material or design furnished by the Government nor for the repair of any damage that results from any defect in Government-furnished material or design.

j. This warranty shall not limit the Government's rights under the Inspection and Acceptance clause of this contract with respect to latent defects, gross mistakes, or fraud. (FAR 52.246-21)

1.43. UTILITY SERVICES.

a. The Contractor shall provide at the site for all work under this contract, the necessary utility services needed for completion of work under this contract.

b. Electricity. All electric current required by the Contractor shall be furnished at his own expense. All temporary connections for electricity shall be subject to the approval of the Contracting Officer. All temporary lines shall be furnished, installed, connected and maintained by the Contractor in a workman-like manner satisfactory to the Contracting Officer, and shall be removed by the Contractor in like manner at his expense prior to completion of the construction.

1.44. COMMERCIAL WARRANTY. The Contractor agrees that the building and construction materials and building hardware furnished under this contract shall be covered by the most favorable commercial warranty the Contractor gives to any customer for such products and that the rights and remedies provided herein are in addition to and do not limit any rights afforded to the Government by any other clause of this contract. The warranty will take effect immediately after compliance by the Contractor of these specifications, and acceptance of the completed work by the Government.

1.45. PAYMENT FOR MATERIAL STORED OFFSITE. (NOT USED).

1.46. WORK IN QUARANTINED AREA. (NOT USED).

1.47. WORK ON OR ADJACENT TO RAILROAD PROPERTY. (NOT USED).

1.48. INSURANCE REQUIREMENTS FOR WORK ON OR ADJACENT TO RAILROAD PROPERTY. (NOT USED).

1.49. CONTROL OF WATER LEVELS. (NOT USED).

1.50. FLOOD EMERGENCY.

a. In the event that a threat of flood is considered to exist or to be impending during work under this contract, the Contractor, if ordered, shall perform emergency operations as directed in order to place the pumping plant into operation, and an equitable adjustment in the contract price will be made in accordance with the CONTRACT CLAUSE entitled "Changes" on account of the additional work required.

b. Should the Contractor, after specific notification by the Contracting Officer that a flood emergency is considered to exist, or to be impending, fail to complete, without delay, the emergency operations as specified in paragraph a above, or should the flood emergency be of such nature that, in the opinion of the Contracting Officer, the Contractor is unable to complete the required emergency operations in time to place the pumping plant into operation by the time it is needed, the Contracting Officer shall have the right to prescribe the location and the order of work by the Contractor for the duration of the flood emergency and to employ the necessary equipment and perform all or any part of such work or to cause all or any part of such work to be performed by others. No payment will be made to the Contractor for any work by the Contracting Officer or by others under the terms of this subparagraph or for added expense to the Contractor occasioned by construction difficulties arising from operations of the Contracting Officer or others under the terms of this subparagraph.

c. The right is reserved by the Contracting Officer to suspend the Contractor's operations for such period or periods of time during threat of impending flood or flood emergency as may be necessary. Intervals during which work is suspended by order of the Contracting Officer under the provisions of this subparagraph will not be counted as part of the contract period.

d. The dewatering system shall be designed with the understanding that the probability of backflooding the excavation is high. The components of the dewatering system should be designed so that they can be moved prior to emergency flooding or can be submerged with minimal or no damage.

1.51. PATENTS, PROPRIETARY RIGHTS. (NOT USED).

1.52. PROTECTION OF MATERIALS AND WORK. The Contractor shall at all times protect and preserve all materials, supplies, and equipment of every description (including property which may be Government-furnished or owned) and all work performed. AT ALL TIMES THE CONTRACTOR SHALL PROTECT THE AREAS BEHIND THE LEVEE FROM HIGH WATER ON THE LEVEE ENTERING THE PROTECTED (LANDSIDE) AREA THROUGH THE BREECHED LEVEE. ADEQUATE DEWATERING SYSTEM SHALL BE PROVIDED AND MAINTAINED. All reasonable requests of the Contracting Officer to enclose or specially protect such property shall be complied with. If, as determined by the Contracting Officer, material, equipment, supplies, and work performed are not adequately protected by the Contractor, the

Government may protect such property and the cost thereof may be charged to the Contractor or deducted from any payments due to him.

1.53. EXISTING FLOOD PROTECTION. The Contractor shall conduct the construction of all work under this contract in such manner that existing flood protection within the limits of the existing embankments is maintained at all times. The embankments shall not be disturbed except as necessary to perform the work. When the work under this contract is completed, flood protection within such areas shall be at least equal to that existing before start of construction.

1.54. FINAL ACCEPTANCE. (NOT USED).

1.55. OBSTRUCTION OF NAVIGABLE WATERWAYS (DEC 1991). (NOT USED).

1.56. DREDGE SIZE. (NOT USED).

1.57. SIGNAL LIGHTS. (NOT USED).

1.58. INSPECTION. (NOT USED).

1.59. DESIGNATED BILLING OFFICE. The designated billing office for this contract shall be Wynne Area Office, Bennie House Center, 1932 N. Falls Boulevard, P.O. Box 729, Wynne, Arkansas 72396-0729.

1.60. YEAR 2000 COMPLIANCE. (NOT USED)

-- End of Section --

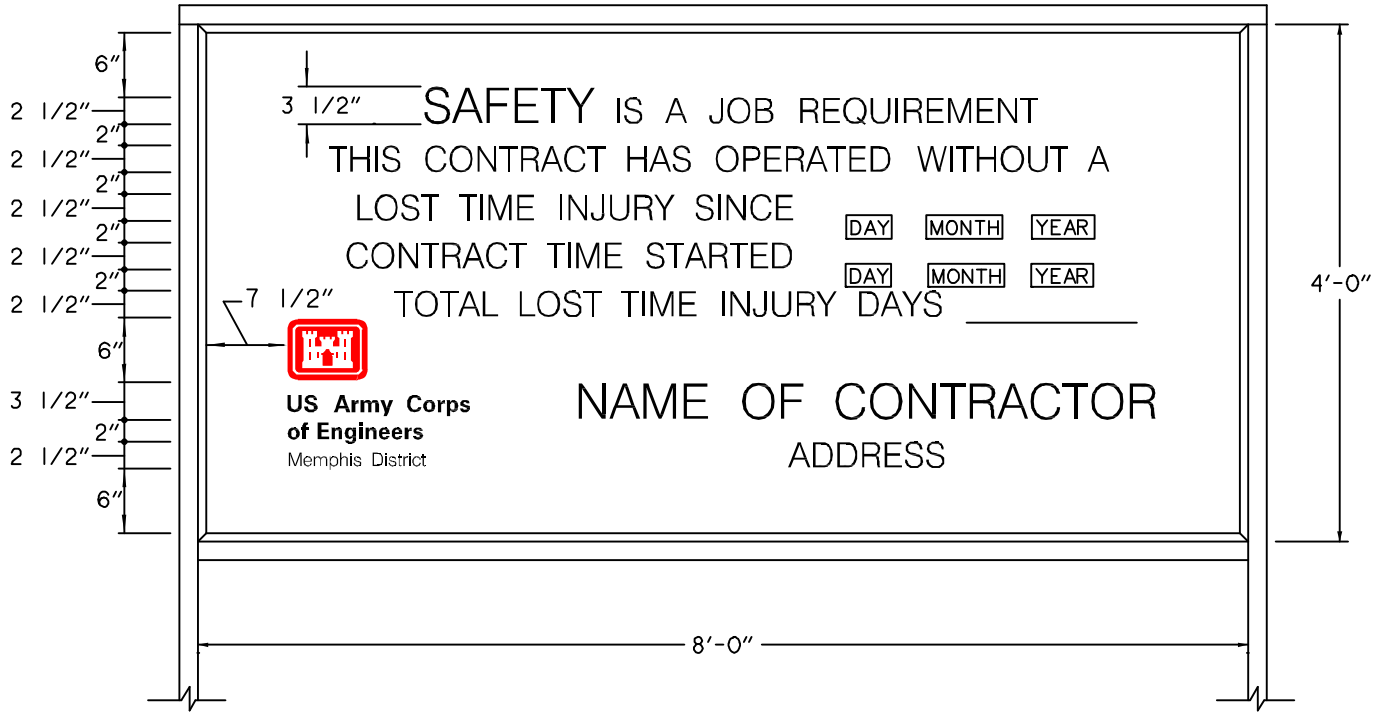

ELEVATION

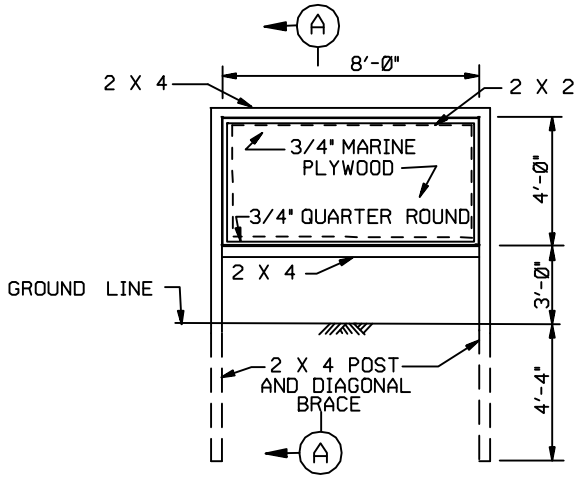

ELEVATION

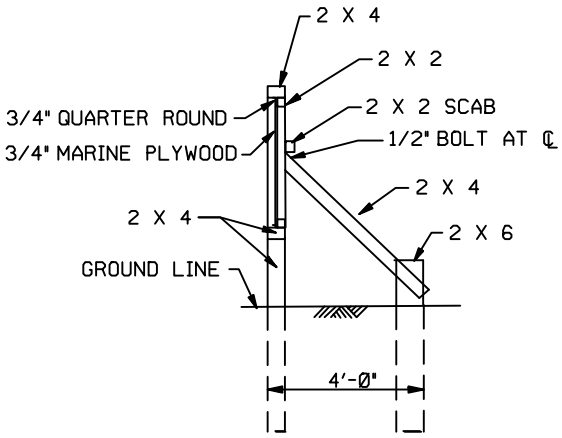

SECTION A-A

NOTES:

1. CONTRACTOR SHALL CONSTRUCT AND MAINTAIN A DURABLE SIGN AS SHOWN.
2. WOOD IN CONTACT WITH GROUND SHALL BE TREATED LUMBER.
3. ALL EXPOSED SURFACES SHALL BE WHITE HOUSE PAINT.
4. LETTERING SHALL BE BLACK.
5. ENGINEER CASTLE DECAL FURNISHED BY GOVERNMENT.
6. 22 GA. SHEET METAL MAY BE USED IN LIEU OF PLYWOOD.

US Army Corps of Engineers
Memphis District

ENGINEER CASTLE DETAIL

SCALE: NONE MARCH 1995

U.S. ARMY ENGINEER DISTRICT, MEMPHIS
CORPS OF ENGINEERS
MEMPHIS, TENNESSEE

SAFETY SIGN

TECHNICAL TABLE OF CONTENTS

SECTION NO.	DESCRIPTION
DIVISION 01	GENERAL REQUIREMENTS
01025	MEASUREMENT AND PAYMENT
01090	SOURCES FOR REFERENCE PUBLICATIONS
01130	ENVIRONMENTAL PROTECTION
01330	SUBMITTAL PROCEDURES
01451	CONTRACTOR QUALITY CONTROL
01452	PROJECT SIGN
DIVISION 02	SITE WORK
02210	CLEARING AND GRUBBING
02215	GEOTEXTILES
02216	STONE PROTECTION
02220	DEWATERING
02221	EXCAVATION
02222	BACKFILLS AND EMBANKMENTS
02400	WALL DRAIN SYSTEM
02464	METAL SHEET PILING
02546	AGGREGATE SURFACING
02720	STORM DRAINAGE SYSTEM
02935	TURF
DIVISION 03	CONCRETE
03101	FORMWORK FOR CONCRETE
03210	STEEL BARS FOR CONCRETE REINFORCEMENT
03301	CAST-IN-PLACE STRUCTURAL CONCRETE
DIVISION 04	NOT USED
DIVISION 05	METALS
05055	WELDING, STRUCTURAL
05120	STRUCTURAL STEEL AND MISCELLANEOUS
05914	SLUICE GATE AND GATE LIFT ASSEMBLY

DIVISIONS 06 THROUGH 16 NOT USED

DIVISION 1 - GENERAL REQUIREMENTS

SECTION 01025

MEASUREMENT AND PAYMENT

TABLE OF CONTENTS

PART 1 GENERAL 1
1.1 PROJECT AND SAFETY SIGNS 1
1.2 LUMP SUM PAYMENT ITEMS 1
1.3 UNIT PRICE PAYMENT ITEMS 5

PART 2 PRODUCTS (NOT APPLICABLE) 8

PART 3 EXECUTION (NOT APPLICABLE) 8

SECTION 01025

MEASUREMENT AND PAYMENT

PART 1 GENERAL

1.1 PROJECT AND SAFETY SIGNS

No separate payment will be made for erecting, maintaining and removing safety and project signs, and all costs in connection therewith will be considered an incidental obligation of the Contractor.

1.2 LUMP SUM PAYMENT ITEMS

Payment items for the work of this contract for which contract lump sum payments will be made are listed in the BIDDING SCHEDULE and described below. All costs for items of work, which are not specifically mentioned to be included in a particular lump sum or unit price payment item, shall be included in the listed lump sum item most closely associated with the work involved. The lump sum price and payment made for each item listed shall constitute full compensation for furnishing all plant, labor, materials, and equipment, and performing any associated Contractor quality control, environmental protection, meeting safety requirements, tests and reports, and for performing all work required for which separate payment is not otherwise provided. All pay items with the unit measure of LS (lump sum) will be considered lump sum items.

(1) Mobilization and Demobilization

a. Payment will be made for costs associated with mobilization and demobilization, as defined in Special Contract Requirement PAYMENT FOR MOBILIZATION AND DEMOBILIZATION.

b. Unit of Measure: Lump Sum (LS).

.

(2) Environmental Protection

a. Payment will be made for costs associated with operations necessary for environmental protection as specified in Section 01130 ENVIRONMENTAL PROTECTION.

b. Unit of measure: Lump Sum (LS).

(3) Clearing and Grubbing

a. Payment for clearing and grubbing will be made at the contract lump sum price for “Clearing and Grubbing”, which price and payment shall constitute full

compensation for clearing and grubbing, disposal of cleared and grubbed materials, refill of grubbing holes, and performing all operations incidental thereto; all as specified in Section 02210 CLEARING AND GRUBBING.

b. Unit of measure: Lump Sum (LS).

(4) Dewatering

a. Payment for maintaining drainage and the water removal system will be made in accordance with the Payment Schedule below at the contract lump sum price for "Dewatering", which price and payment shall constitute full compensation for furnishing all plant, labor, material and equipment; designing, furnishing, installing, maintaining, operating and removing the water removal system, drainage system and all work incidental thereto including construction of dikes, ditches, drains, sumps, pumps, and all other work which may be necessary to accomplish the specified dewatering results and which is not specified to be paid for separately. All wells required for this job shall be installed by the Contractor and will be considered a part of the bid price.

Payment Schedule

20%	At completion of installation and acceptable initial operation.
70%	Prorated cost on the basis of the estimated number of months of use.
10%	At completion of removal as required herein.

b. Unit of measure: Lump Sum (LS).

(5) Wall Drain

a. Payment for wall drain system will be made at the contract lump sum price for "Wall Drain", which price and payment shall constitute full compensation for furnishing all materials and performing all operations incidental thereto; all as specified in Section 02400 WALL DRAIN SYSTEM.

b. Unit of Measure: Lump Sum (LS)

(6) Turf

a. Seeding completed and accepted will be paid for at the contract lump sum price for "Turf". Payment will be made in accordance with the following schedule:

70% On the first regularly scheduled estimate after the Seeding and Erosion Control process is complete.

30% After the Turf Establishment period is complete.

The price shall include full compensation for soil tests; for seedbed preparation; for furnishing and applying lime, fertilizer, soil conditioners, seed, mulch; for watering; for erosion protection; for pesticides; for restoration and clean up; and for all labor, equipment, tools, and incidentals to complete the work.

b. Unit of measure: Lump Sum (LS).

(7) Outlet Structure

a. Payment for Outlet Structure will be made at the contract lump sum price for "Outlet Structure". Payment will be provided for the following: all equipment for transportation and placement of concrete, labor, joint materials, formwork, testing, inspection, quality control, curing and protection, furnishing, transporting, delivering, and placing deformed steel bars for concrete reinforcement, including steel laps as indicated or required, and other incidental items, required to complete the work.

b. Unit of measure: Lump Sum (LS).

(8) Gate Well Structure

a. Payment for Outlet Structure will be made at the contract lump sum price for "Gate Well Structure". Payment will be provided for the following: all equipment for transportation and placement of concrete, labor, joint materials, formwork, testing, inspection, quality control, curing and protection, furnishing, transporting, delivering, and placing deformed steel bars for concrete reinforcement, including steel laps as indicated or required, and other incidental items, required to complete the work.

b. Unit of measure: Lump Sum (LS).

(9) Handrails and Miscellaneous Steel

a. Work completed and accepted will be paid for by the lump sum price for "Handrails and Miscellaneous Steel" which price shall be full compensation for furnishing all materials; for fabrication, shop work including hot-dip galvanizing, transportation, repairing galvanized surfaces, performing of quality control, sampling and testing, and for all labor, equipment, tools, and incidentals necessary to complete the work.

b. Unit of measure: Lump Sum (LS).

(10) Sluice Gate and Gate Lift Assemblies

a. Payment for Sluice Gate and Gate Lift Assemblies will be made at the contract lump sum price for “Sluice Gate and Gate Lift Assemblies”, which price and payment shall be full compensation for delivery, storage, and installation of manufactured products including sluice gate, wall thimble, stem, stem guides, operator lift, portable gasoline powered actuator, stem cover, position indicators, all fasteners, base plates; for all labor, material and equipment for installation; for all acceptance trial operations and tests; all operation and maintenance manuals and incidental items for completion of work.

b. Unit of measure: Lump Sum (LS).

(11) Aggregate Surfacing

a. Payment for surfacing the levee road will be paid for at the contract lump sum price for “Aggregate Surfacing”, which includes all equipment, tools, and labor; for furnishing materials, installing, for performing quality control and testing, and incidental operations necessary to complete the work as specified in Section 02546 AGGREGATE SURFACING.

b. Unit of measure: Lump Sum (LS).

(12) Excavation

a. Payment for excavation material will be made at the lump sum price for “Excavation”, which includes all equipment and labor; all removing and hauling of excavation material, disposal of excess material, preparation for structures and storm drainage, all maintenance of subgrade prior to placement of backfill or construction of structures, all stockpiling of materials in segregated form, for final cleanup of right-of-way and incidental operations required to complete the work as specified in Section 02221 EXCAVATION.

b. Unit of measure: Lump Sum (LS).

(13) Cofferdam

a. Payment for temporary earthen cofferdam construction and removal will be made at the contract lump sum price for “Cofferdam”, which price and payment shall constitute full compensation for clearing and grubbing; stripping and stockpiling topsoil; excavation, loading and hauling; preparation of cofferdam foundation surface; installation, maintenance, and formation of temporary earthen cofferdam; compaction; performing quality control; testing and sampling, removal of temporary cofferdam, final clean up; all equipment and labor; seeding and restoration as required; environmental protection and incidental operations required to complete the work as shown on the contract drawings. All materials, equipment and work required for the installation and removal of this item shall be considered subsidiary to the item “COFFERDAM”.

c. Unit of Measure: Lump Sum (LS)

(14) Pervious Backfill

a. Payment for pervious backfill material will be made at the contract lump sum price for "Pervious Backfill," which price shall include all costs of furnishing, hauling, placing, and maintenance of the pervious backfill material as described in Section 02222 BACKFILLS AND EMBANKMENTS.

b. Unit of Measure: Lump Sum (LS).

(15) Compacted Impervious Backfill

a. Payment for compacted impervious backfill material will be made at the contract lump sum price for "Compacted Impervious Backfill," which price shall include all costs of furnishing, hauling, placing, and maintenance of the pervious backfill material as described in Section 02222 BACKFILLS AND EMBANKMENTS.

b. Unit of Measure: Lump Sum (LS).

(16) Semi-Compacted Impervious Backfill

a. Payment for semi-compacted impervious backfill material will be made at the contract lump sum price for "Semi-Compacted Impervious Backfill," which price shall include all costs of furnishing, hauling, placing, and maintenance of the pervious backfill material as described in Section 02222 BACKFILLS AND EMBANKMENTS.

b. Unit of Measure: Lump Sum (LS).

1.3 UNIT PRICE PAYMENT ITEMS

Payment items for work on this contract on which the contract unit price payments will be made are listed in the BIDDING SCHEDULE and described below. The unit price and payment made for each item listed shall constitute full compensation for furnishing all plant, labor, materials, and equipment, and performing any associated Contractor quality control, environmental protection, meeting safety requirements, tests and reports, and for performing all work required for each of the unit price items.

(1) Geotextile Fabric

a. Payment shall be made at the contract unit price per square foot for “Geotextile”, which price and payment shall be full compensation to the Contractor for providing all plant, labor, material, and equipment and performing all operations

necessary for the complete and satisfactory installation of the geotextile fabric. The following items are included in the contract unit price for "Geotextile Fabric" and shall not be counted a second time in the process of determining the extent of geotextile placed: Material and associated equipment and operation used in laps, seams, or extra length; securing pins and associated material, equipment, and operations. No payment will be made for geotextile fabric replaced because of waste, contamination, damage, repair, or due to Contractor fault or negligence.

b. Measurement for geotextile will be made in place in the field, in accordance with Paragraph 1.10 of Section 00800.

Unit of Measure: Square Foot (SF)

(2) Filter Material

a. Payment for filter material will be made at the contract unit price for "Filter Material," which price shall include all costs of furnishing, hauling, placing, and maintenance of the filter material layer until placement of the riprap cover is completed and accepted. No payment will be made for excess thickness of the filter material layer nor for material required to replace embankment or subgrade material lost by rain wash, wind erosion, or otherwise, except for additional bedding material ordered in writing by the Contracting Officer.

b. The filter material will be measured for payment, in the presence of a Government Inspector, unless waived by the Contracting Officer, by being weighed on approved, accurately calibrated scales furnished by and at the expense of the Contractor. Weight certificates furnished by a public weighmaster where available will be acceptable in lieu of such procedure when authorized by the Contracting Officer. Individual weight tickets shall be furnished the Government Inspector at the time of delivery.

c. Unit of Measure: Ton (TN).

(3) Riprap

a. Payment for riprap will be made at the contract unit prices for "Riprap, R-90" and “Riprap, R-200” which prices shall include all costs of furnishing, hauling, testing, handling, and placing the riprap as specified in Section 02216 STONE PROTECTION.

b. Riprap will be measured for payment, in the presence of a Government Inspector, unless waived by the Contracting Officer, by being weighed on approved, accurately calibrated scales furnished by and at the expense of the Contractor. Weight certificates furnished by a public weighmaster where available will be acceptable in lieu of such procedure when authorized by the Contracting Officer. Individual weight tickets shall be furnished the Government Inspector at the time of delivery.

c. Unit of Measure: Ton (TN).

(4) Reinforced Concrete Pipe

a. Payment for pipe culvert will be made at the contract unit price for "Reinforced Concrete Pipe" which includes compensation for furnishing materials, including carrier pipe, encasement pipe, and incidentals, delivery and/or hauling, installation, and trench backfill compaction in accordance with the plans and specifications, gaskets or joint fillers, for all labor, equipment, tools, and incidentals to complete the work.

b. Measurement for payment will be based on linear feet of concrete pipe installed.

c. Unit of Measure: Linear Foot (LF).

(5) Precast Flared End Section

a. Payment for flared end sections will be paid for at the contract unit price for "Precast Flared End Section", which includes compensation for furnishing materials, delivery and/or hauling, installation, gaskets or joint fillers, for all labor, equipment, tools, and incidentals to complete the work.

b. Measurement for payment will be based on number of flared end sections installed.

c. Unit of Measure: Each (EA).

(6) Sheet Piling

a. Payment for steel sheet piling quantities will be made at the applicable contract price per square foot "Sheet Piling," which applicable price shall include all cost of furnishing, driving, trimming the tops of piles, treatment of pile tops, cutting holes, for performing quality control and testing, and incidental operations necessary to complete the work as specified in Section 02464 METAL SHEET PILING. When piles which have not been driven to penetration depths shown on drawings are directed to be cut off, except for cut-offs due to excessive battering, a lump sum payment of $10.00 will be made for cutting off each pile, plus an additional sum will be paid for each square foot of the portion cut off and measured for payment in the amount of 50 percent of the full applicable contract unit price.

b. Splices: A payment of $25.00 will be made for each welded pile splice made at the direction of the Contracting Officer to drive piles to depths greater than the

predetermined lengths and to extend these piles to the indicated top of pile elevation shown on drawings.

c. Pulled Piles: Piles which are directed to be pulled and found to be in good condition will be paid for at the applicable contract price for furnishing and driving the pile in its original position plus an equal amount for the cost of pulling. Such pulled piles when redriven will be paid for at 50 percent of the applicable contract unit price for that portion of the pile redriven only; the cost of furnishing, initial driving and pulling the piles is to be paid for as specified above. When piles are pulled and found to be damaged no payment will be made for originally furnishing and driving such piles, nor for the operation of pulling. Piles replacing damaged piles will be paid for at the applicable contract unit price for the lengths driven.

d. Unit of measure: Square Foot (SF).

PART 2 PRODUCTS (NOT APPLICABLE)

PART 3 EXECUTION (NOT APPLICABLE)

-- End of Section --

DIVISION 1 - GENERAL REQUIREMENTS

SECTION 01090

SOURCES FOR REFERENCE PUBLICATIONS

TABLE OF CONTENTS

PART 1 GENERAL 1
1.1 REFERENCES 1
1.2 ORDERING INFORMATION 1

SECTION 01090

SOURCES FOR REFERENCE PUBLICATIONS

PART 1 GENERAL

1.1 REFERENCES

Various publications are referenced in other sections of the specifications to establish requirements for the work. These references are identified in each section by document number, date and title. The document number used in the citation is the number assigned by the sponsoring organization, e.g. UL 1 (1993; Rev thru Jan 1995) Flexible Metal Conduit. However, when the sponsoring organization has not assigned a number to a document, an identifying number has been assigned for convenience, e.g. UL's unnumbered 1995 edition of their Building Materials Directory is identified as UL-01 (1995) Building Materials Directory. The sponsoring organization number (UL 1) can be distinguished from an assigned identifying number (UL-01) by the lack of a dash mark (-) in the sponsoring organization assigned number.

1.2 ORDERING INFORMATION

The addresses of the organizations whose publications are referenced in other sections of these specifications are listed below, and if the source of the publications is different from the address of the sponsoring organization, that information is also provided. Documents listed in the specifications with numbers which were not assigned by the sponsoring organization should be ordered from the source by title rather than by number.

ACI INTERNATIONAL (ACI)
P.O. Box 9094
Farmington Hills, MI 48333-9094
Ph: 248-848-3700
Fax: 248-848-3701
Internet: http://www.aci-int.inter.net

AGRICULTURAL MARKETING SERVICE (AMS)
Seed Regulatory and Testing Branch
USDA, AMS, LS Div.
Room 209, Bldg. 306, BARC-East
Beltsville, MD 20705-2325
Ph: 301-504-9430
Fax: 301-504-5454
Internet: http://www.ams.usda.gov/lsg/ls-sd.htm
e-mail: james_p_triplitt@usda.gov

AMERICAN INSTITUTE OF STEEL CONSTRUCTION (AISC)
One East Wacker Dr., Suite 3100
Chicago, IL 60601-2001
Ph: 312-670-2400
Publications: 800-644-2400
Fax: 312-670-2400
Internet: http://www.aiscweb.com

AMERICAN ASSOCIATION OF STATE HIGHWAY AND TRANSPORTATION OFFICIALS (AASHTO)
444 N. Capital St., NW, Suite 249
Washington, DC 20001
Ph: 888-227-4860 or 202-624-5800
Fax: 202-624-5806

AMERICAN SOCIETY FOR TESTING AND MATERIALS (ASTM)
100 Barr Harbor Drive
West Conshohocken, PA 19428-2959
Ph: 610-832-9500
Fax: 610-832-9555
E-mail: cservice@astm.org

AMERICAN SOCIETY OF MECHANICAL ENGINEERS (ASME)
22 Law Dr., Box 2300
Fairfield, NJ 07007-2900
Ph: 800-843-2763
Fax: 201-882-1717
Internet: www.asme.org

AMERICAN WATER WORKS ASSOCIATION
(AWWA)
6666 West Quincy
Denver, CO 80235
Ph: 800-926-7337
Fax: 303-795-1989
Internet: www.awwa.org

AMERICAN WELDING SOCIETY (AWS)
550 N.W. LeJeune Road
Miami, FL 33126
Ph: 305-443-9353
Fax: 305-443-7559

TENNESSEE DEPARTMENT OF TRANSPORTATION (IDOT)
505 Deaderick St.
Suite 700 James K. Polk Bldg.
Ph: 615-741-2331

CODE OF FEDERAL REGULATIONS (CFR)
Order from:
Government Printing Office
Washington, DC 20402
Ph: 202-512-1800
Fax: 202-275-7703
Internet: http://www.pls.com:8001/his/cfr.html

COMMERCIAL ITEM DESCRIPTIONS (CID)
Order from:
General Services Administration
Federal Supply Service Bureau
470 E L'Enfant Plaza, S.W.
Washington, DC 20407
Ph: 202-619-8925
Internet: http://pub.fss.gsa.gov/h1-pub.html

CORPS OF ENGINEERS (COE)
Order from:
U.S. Army Engineer Waterways Experiment Station
ATTN: Technical Report Distribution Section, Services
Branch, TIC
3909 Halls Ferry Rd.
Vicksburg, MS 39180-6199
Ph: 601-634-2355
Fax: 601-634-2506

ENGINEERING MANUALS (EM)
USACE Publications Depot
Attn: CEIM-SP-D
2803 52nd Avenue
Hyattsville, MD 20781-1102
Ph: 301-394-0081

FEDERAL SPECIFICATIONS (FS)
Order from:
General Services Administration
Federal Supply Service Bureau
470 L'Enfant Plaza, S.W.
Washington, DC 20407
Ph: 202-619-8925
Fax: 202-619-8978
Internet: http://pub.fss.gsa.gov/h1-pub.html

End of Section

DIVISION 1 - GENERAL REQUIREMENTS

SECTION 01130

ENVIRONMENTAL PROTECTION

TABLE OF CONTENTS

PART 1 GENERAL 1
1.1 DEFINITIONS 1
1.2 ENVIRONMENTAL PROTECTION REQUIREMENTS 1
1.2.1 Environmental Protection Plan 1
1.2.1.1 Protection of Features 1
1.2.1.2 Procedures 2
1.2.1.3 Permit or License 2
1.2.1.4 Drawings 2
1.2.1.5 Environmental Monitoring Plans 2
1.2.1.6 Traffic Control Plan 2
1.2.1.7 Surface and Ground Water 2
1.2.1.8 Work Area Plan 2
1.2.1.9 Plan of Borrow Area(s) 2
1.3 SUBCONTRACTORS 2
1.4 PERMITS OBTAINED BY CORPS OF ENGINEERS 3
1.5 REGULATORY REQUIREMENTS 3

PART 2 PRODUCTS (Not Applicable) 3

PART 3 EXECUTION 3
3.1 PROTECTION OF ENVIRONMENTAL RESOURCES 3
3.1.1 Protection of Land Resources 3
3.1.2 Work Area Limits 3
3.1.3 Protection of Landscape 3
3.1.4 Reduction of Exposure of Unprotected Erodible Soils 4
3.1.5 Temporary Protection of Disturbed Areas 4
3.1.6 Erosion and Sedimentation Control Devices 4
3.1.7 Location of Contractor Facilities 4
3.1.8 Borrow Areas on Government Property 4
3.1.9 Disposal Areas on Government Property 4
3.1.10 Temporary Excavation and Embankments 5
3.1.11 Disposal of Solid Wastes 5
3.1.12 Disposal of Chemical Wastes 5
3.1.13 Disposal of Discarded Materials 5
3.2 HISTORICAL, ARCHAEOLOGICAL, AND CULTURAL RESOURCES 5
3.3 PROTECTION OF WATER RESOURCES 5
3.3.1 Stream Crossings 5
3.3.2 Monitoring of Water Areas Affected by Construction Activities 6

3.4 PROTECTION OF FISH AND WILDLIFE RESOURCES 6
3.5 PROTECTION OF AIR RESOURCES 6
3.5.1 Particulates 6
3.5.2 Hydrocarbons and Carbon Monoxide 6
3.5.3 Odors 7
3.5.4 Monitoring Air Quality 7
3.6 INSPECTION 7
3.7 POST CONSTRUCTION CLEANUP 7
3.8 RESTORATION OF LANDSCAPE DAMAGE 7
3.9 MAINTENANCE OF POLLUTION FACILITIES 7
3.10 TRAINING OF CONTRACTOR PERSONNEL IN POLLUTION CONTROL 7

SECTION 01130

ENVIRONMENTAL PROTECTION

PART 1 GENERAL

1.1 DEFINITIONS

For the purpose of this specification, environmental pollution and damage is defined as the presence of chemical, physical, or biological elements or agents which adversely affect human health or welfare; unfavorably alter ecological balances of importance to human life; affect other species of importance to man; or degrade the utility of the environment for aesthetic, cultural and/or historical purposes. The control of environmental pollution and damage requires consideration of air, water, and land, and includes management of visual aesthetics, noise, solid waste, radiant energy and radioactive materials, as well as other pollutants.

1.2 ENVIRONMENTAL PROTECTION REQUIREMENTS

Provide and maintain, during the life of the contract, environmental protection. Plan for and provide environmental protective measures to control pollution that develops during normal construction practice. Plan for and provide environmental protective measures required to correct conditions that develop during the construction of permanent or temporary environmental features associated with the project. Comply with Federal, State, and local regulations pertaining to the environment, including but not limited to water, air, and noise pollution.

1.2.1 Environmental Protection Plan

Within 21 days after receipt of Notice of Award of the contract, the Contractor shall submit in writing an Environmental Protection Plan and, prior to starting work, and meet with representatives of the Contracting Officer to develop mutual understanding relative to compliance with this provision and administration of the environmental protection program. Approval of the Contractor's plan will not relieve the Contractor of his responsibility for adequate and continuing control of pollutants and other environmental protection measures. The Government reserves the right to make changes in his environmental protection plan and operations as necessary to maintain satisfactory environmental protection performance. The Environmental Protection Plan shall include but not be limited to the following:

1.2.1.1 Protection of Features

The Contractor shall determine methods for the protection of features to be preserved within authorized work areas. The Contractor shall prepare a listing of methods to protect resources needing protection, i.e., trees, shrubs, vines, grasses and ground cover, landscape features, air and water quality, fish and wildlife, soil, historical, archaeological and cultural resources.

1.2.1.2 Procedures

The Contractor shall implement procedures to provide the required environmental protection and to comply with the applicable laws and regulations. The Contractor shall set out the procedures to be followed to correct pollution of the environment due to accident, natural causes or failure to follow the procedures set out in accordance with the Environmental Protection Plan.

1.2.1.3 Permit or License

The Contractor shall obtain all needed permits or licenses.

1.2.1.4 Drawings

The Contractor shall include drawings showing locations of any proposed temporary excavations or embankments for haul roads, stream crossings, material storage areas, structures, sanitary facilities, stockpiles of earth materials, and disposal areas for excess earth material and unsatisfactory earth materials.

1.2.1.5 Environmental Monitoring Plans

The Contractor shall include environmental monitoring plans for the job site which incorporate land, water, air and noise monitoring.

1.2.1.6 Traffic Control Plan

The Contractor shall include a traffic control plan for the job site.

1.2.1.7 Surface and Ground Water

The Contractor shall establish methods of protecting surface and ground water during construction activities.

1.2.1.8 Work Area Plan

The Contractor shall include a work area plan showing the proposed activity in each portion of the area and identifying the areas of limited use or nonuse. The plan shall include measures for marking the limits of use areas.

1.2.1.9 Plan of Borrow Area(s)

The Contractor shall include a plan of borrow area(s) for the job site.

1.3 SUBCONTRACTORS

Assurance of compliance with this section by subcontractors will be the responsibility of the Contractor.

1.4 PERMITS OBTAINED BY CORPS OF ENGINEERS

The Corps of Engineers will not obtain any permits for this project. See Contract Clause entitled "PERMITS AND RESPONSIBILITIES".

1.5 REGULATORY REQUIREMENTS

The Contractor shall comply with all state regulatory and statutory requirements.

PART 2 PRODUCTS (NOT APPLICABLE)

PART 3 EXECUTION

3.1 PROTECTION OF ENVIRONMENTAL RESOURCES

The environmental resources within the project boundaries and those affected outside the limits of permanent work under this contract shall be protected during the entire period of this contract. The Contractor shall confine his activities to areas defined by the contract drawings or specifications. Environmental protection shall be as stated in the following subparagraphs.

3.1.1 Protection of Land Resources

Prior to the beginning of any construction, the Contracting Officer will identify all land resources to be preserved within the Contractor's work area. The Contractor shall not remove, cut, deface, injure, or destroy land resources including trees, shrubs, vines, grasses, top soil, and land forms without special permission from the Contracting Officer. No ropes, cables, or guys shall be fastened to or attached to any trees for anchorage unless specifically authorized. Where such special emergency use is permitted, the Contractor shall provide effective protection for land and vegetation resources at all times as defined in the following subparagraphs.

3.1.2 Work Area Limits

Prior to any construction, the Contractor shall mark the areas where no work is to be performed under this contract. Isolated areas within the general work area which are to be saved and protected shall also be marked or fenced. Monuments and markers shall be protected before construction operations commence and during all construction operations. Where construction operations are to be conducted during darkness, the markers shall be visible during darkness. The Contractor shall convey to his personnel the purpose of marking and/or protection of all necessary objects.

3.1.3 Protection of Landscape

Trees, shrubs, vines, grasses, land forms and other landscape features to be preserved, indicated and defined on the drawings submitted by the Contractor as a part of the Environmental Protection Plan, shall be clearly identified by marking, fencing, or wrapping with boards, or any

other approved techniques.

3.1.4 Reduction of Exposure of Unprotected Erodible Soils

Earthwork brought to final grade shall be finished as indicated and specified. Side slopes and back slopes shall be protected as soon as practicable upon completion of rough grading. All earthwork shall be planned and conducted to minimize the duration of exposure of unprotected soils. Except in instances where the constructed feature obscures borrow areas, quarries and waste material areas, these areas shall not initially be cleared in total. Clearing of such areas shall progress in reasonably sized increments as needed to use the areas developed as approved by the Contracting Officer.

3.1.5 Temporary Protection of Disturbed Areas

Such methods as necessary shall be utilized to effectively prevent erosion and control sedimentation, including but not limited to the following:

a. Retardation and Control of Runoff

Runoff from the construction site shall be controlled by construction of diversion ditches, benches, and berms to retard and divert runoff to protected drainage courses, and the Contractor shall also utilize any measures required by area-wide plans approved under Paragraph 208 of the Clean Water Act.

3.1.6 Erosion and Sedimentation Control Devices

The Contractor shall construct or install all temporary and permanent erosion sedimentation control features. Temporary erosion and sediment control measures such as berms, dikes, drains, sedimentation basin, grassing and mulching shall be maintained until permanent drainage and erosion control facilities are completed and operative.

3.1.7 Location of Contractor Facilities

The Contractor's field offices, staging areas, stockpiles, storage, and temporary buildings shall be placed in areas designated on the contract drawings and approved by the Contracting Officer. Temporary movement or relocation of Contractor facilities shall be made only on approval by the Contracting Officer.

3.1.8 Borrow Areas on Government Property

Borrow areas on Government property shall be managed to minimize erosion and to prevent sediment from entering nearby water courses or lakes.

3.1.9 Disposal Areas on Government Property

Disposal areas on Government property shall be managed and controlled to limit material to

areas designated on the contract drawings and prevent erosion of soil or sediment from entering nearby water courses or lakes. Disposal areas shall be developed in accordance with the grading plan indicated on the contract drawings.

3.1.10 Temporary Excavation and Embankments

Temporary excavation and embankments shall be controlled to protect adjacent areas from contamination.

3.1.11 Disposal of Solid Wastes

Solid wastes (excluding clearing debris) shall be placed in containers which are emptied on a regular schedule. All handling and disposal shall be conducted to prevent contamination. The Contractor shall transport all solid waste off Government property and dispose of it in compliance with Federal, State, and local requirements for solid waste disposal.

3.1.12 Disposal of Chemical Wastes

Chemical wastes shall be stored in corrosion resistant containers, removed from the work area and disposed of in accordance with Federal, State, and local regulations.

3.1.13 Disposal of Discarded Materials

Discarded materials other than those which can be included in the solid waste category shall be handled as directed by the Contracting Officer.

3.2 HISTORICAL, ARCHAEOLOGICAL, AND CULTURAL RESOURCES

Existing historical, archaeological and cultural resources within the Contractor's work area will be so designated by the Contracting Officer and precautions shall be taken by the Contractor to preserve all such resources as they existed at the time they were pointed out to the Contractor. The Contractor shall install all protection for these resources so designated on the contract drawings and shall be responsible for their preservation during this contract. If during construction items of apparent archaeological or historical interest are discovered, they shall be left undisturbed and the Contractor shall report the find immediately to the Contracting Officer.

3.3 PROTECTION OF WATER RESOURCES

The Contractor shall keep construction activities under surveillance, management and control to avoid pollution of surface and ground waters. Special management techniques as set out below shall be implemented to control water pollution by the listed construction activities which are included in this contract.

3.3.1 Stream Crossings

Stream crossings shall be controlled during construction. Crossings shall provide movement of

materials or equipment which do not violate water pollution control standards of the Federal, State or local Government.

3.3.2 Monitoring of Water Areas Affected by Construction Activities

Monitoring of water areas affected by construction activities shall be the responsibility of the Contractor. All water areas affected by construction activities shall be monitored by the Contractor.

3.4 PROTECTION OF FISH AND WILDLIFE RESOURCES

The Contractor shall keep construction activities under surveillance, management and control to minimize interference with, disturbance to and damage of fish and wildlife. Species that require specific attention along with measures for their protection shall be listed by the Contractor prior to beginning of construction operations.

3.5 PROTECTION OF AIR RESOURCES

The Contractor shall keep construction activities under surveillance, management and control to minimize pollution of air resources. All activities, equipment, processes, and work operated or performed by the Contractor in accomplishing the specified construction shall be in strict accordance with the laws of the state or states in which the work is being done and all Federal emission and performance laws and standards. Special management techniques as set out below shall be implemented to control air pollution by the construction activities which are included in the contract.

3.5.1 Particulates

Dust particles, aerosols, gaseous by-products from all construction activities, processing and preparation of materials, such as from asphaltic batch plants, shall be controlled at all times, including weekends, holidays and hours when work is not in progress. The Contractor shall maintain all excavations, stockpiles, haul roads, permanent and temporary access roads, plant sites, spoil areas, borrow areas, and all other work areas within or outside the project boundaries free from particulates which would cause the air pollution standards mentioned in the paragraph "PROTECTION OF AIR RESOURCES" to be exceeded or which would cause a hazard or a nuisance. Sprinkling, chemical treatment of an approved type, light bituminous treatment, baghouse, scrubbers, electrostatic precipitators or other methods will be permitted to control particulates in the work area. Sprinkling, to be efficient, must be repeated at such intervals as to keep the disturbed area damp at all times. The Contractor must have sufficient competent equipment available to accomplish this task. Particulate control shall be performed as the work proceeds and whenever a particulate nuisance or hazard occurs.

3.5.2 Hydrocarbons and Carbon Monoxide

Hydrocarbons and carbon monoxide emissions from equipment shall be controlled to Federal and State allowable limits at all times.

3.5.3 Odors

Odors shall be controlled at all times for all construction activities, processing and preparation of materials.

3.5.4 Monitoring Air Quality

Monitoring of air quality shall be the responsibility of the Contractor. All air areas affected by the construction activities shall be monitored by the Contractor.

3.6 INSPECTION

The Contracting Officer will notify the Contractor in writing of any observed noncompliance with the Contractor's environmental protection plan. The Contractor shall, after receipt of such notice, inform the Contracting Officer of proposed corrective action and take such action as may be approved. If the Contractor fails to comply promptly, the Contracting Officer may issue an order stopping all or part of the work until satisfactory corrective action has been taken. No time extensions will be granted or costs or damages allowed to the Contractor for any such suspension.

3.7 POST CONSTRUCTION CLEANUP

The Contractor shall clean up all area(s) used for construction.

3.8 RESTORATION OF LANDSCAPE DAMAGE

The Contractor shall restore all landscape features damaged or destroyed during construction operations outside the limits of the approved work areas. Such restoration shall be in accordance with the plans submitted for approval by the Contracting Officer.

3.9 MAINTENANCE OF POLLUTION FACILITIES

The Contractor shall maintain all constructed facilities and temporary pollution control devices for the duration of the contract or for that length of time construction activities create the particular pollutant.

3.10 TRAINING OF CONTRACTOR PERSONNEL IN POLLUTION CONTROL

The Contractor shall train his personnel in all phases of environmental protection. The training shall include methods of detecting and avoiding pollution, familiarization with pollution standards, both statutory and contractual, and installation and care of facilities (vegetative covers and instruments required for monitoring purposes) to insure adequate and continuous environmental pollution control.

End of Section

DIVISION 1 - GENERAL REQUIREMENTS

SECTION 01330

SUBMITTAL PROCEDURES

TABLE OF CONTENTS

PART 1 GENERAL 1
1.1 SUBMITTAL IDENTIFICATION 1
1.2 SUBMITTAL CLASSIFICATION 1
1.2.1 Government Approved 1
1.2.2 Information Only 1
1.3 APPROVED SUBMITTALS 2
1.4 DISAPPROVED SUBMITTALS 2
1.5 WITHHOLDING OF PAYMENT 2

PART 2 PRODUCTS (NOT APPLICABLE) 2

PART 3 EXECUTION 2
3.1 GENERAL 2
3.2 SUBMITTAL REGISTER (ENG FORM 4288R) 3
3.3 SCHEDULING 3
3.4 TRANSMITTAL FORM (ENG FORM 4025R) 3
3.5 SUBMITTAL PROCEDURE 3
3.5.1 Procedures 3
3.5.2 Deviations 4
3.6 CONTROL OF SUBMITTALS 4
3.7 GOVERNMENT APPROVED SUBMITTALS 4
3.8 INFORMATION ONLY SUBMITTALS 4
3.9 STAMPS 4

SECTION 01330

SUBMITTAL PROCEDURES

PART 1 GENERAL

1.1 SUBMITTAL IDENTIFICATION

SD-01 Data

SD-04 Drawings

SD-06 Instructions

SD-07 Schedules

SD-08 Statements

SD-09 Reports

SD-13 Certificates

SD-14 Samples

SD-18 Records

SD-19 Operation and Maintenance Manuals

1.2 SUBMITTAL CLASSIFICATION

Submittals are classified as follows:

1.2.1 Government Approved

Governmental approval is required for extensions of design, critical materials, deviations, equipment whose compatibility with the entire system must be checked, and other items as designated by the Contracting Officer. Within the terms of the Contract Clause entitled "Specifications and Drawings for Construction," they are considered to be "shop drawings."

1.2.2 Information Only

All submittals not requiring Government approval will be for information only. They are not considered to be "shop drawings" within the terms of the Contract Clause referred to above.

1.3 APPROVED SUBMITTALS

The Contracting Officer's approval of submittals shall not be construed as a complete check, but will indicate only that the general method of construction, materials, detailing and other information are satisfactory. Approval will not relieve the Contractor of the responsibility for an error that may exist, as the Contractor is responsible for dimensions, the design of adequate connections and details, and the satisfactory construction of all work. After submittals have been approved by the Contracting Officer, resubmitting for the purpose of substituting materials or equipment will not be considered unless accompanied by an explanation of why a substitution is necessary.

1.4 DISAPPROVED SUBMITTALS

The Contractor shall make all corrections required by the Contracting Officer and promptly furnish a corrected submittal in the form and number of copies specified for the initial submittal. If the Contractor considers any correction indicated on the submittals to constitute a change to the contract, a notice in accordance with the Contract Clause "Changes" shall be given promptly to the Contracting Officer.

1.5 WITHHOLDING OF PAYMENT

Payment for materials incorporated in the work will not be made if required approvals have not been obtained.

PART 2 PRODUCTS (NOT APPLICABLE)

PART 3 EXECUTION

3.1 GENERAL

The Contractor shall make submittals as required by the specifications. The Contracting Officer may request submittals in addition to those specified when deemed necessary to adequately describe the work covered in the respective sections. Units of weights and measures used on all submittals shall be the same as those used in the contract drawings. Each submittal shall be complete and in sufficient detail to allow ready determination of compliance with contract requirements. Prior to submittal, all items shall be checked and approved by the Contractor's Quality Control (CQC) representative and each item shall be stamped, signed, and dated by the CQC representative indicating action taken. Proposed deviations from the contract requirements shall be clearly identified. Submittals shall include items such as: Contractor's, manufacturer's, or fabricator's drawings; descriptive literature including (but not limited to) catalog cuts, diagrams, operating charts or curves; test reports; test cylinders; samples; O&M manuals (including parts list); certifications; warranties; and other such required submittals. Submittals requiring Government approval shall be scheduled and made prior to the acquisition of the material or equipment covered thereby. Samples remaining upon completion of the work shall be picked up and disposed of in accordance with manufacturer's Material Safety Data Sheets (MSDS) and in compliance with existing laws and regulations.

3.2 SUBMITTAL REGISTER (ENG FORM 4288R)

At the end of this section is one set of ENG Form 4288R listing items of equipment and materials for which submittals are required by the specifications; this list may not be all inclusive and additional submittals may be required. The Contractor will also be given the submittal register as a diskette containing the computerized ENG Form 4288R and instructions on the use of the diskette. Columns "d" through "q" have been completed by the Government; the Contractor shall complete columns "a" and "r" through "t" and submit the forms (hard copy plus associated electronic file) to the Contracting Officer for approval within 15 calendar days after Notice to Proceed. The Contractor shall keep this diskette up-to-date and shall submit it to the Government together with the monthly payment request. The approved submittal register will become the scheduling document and will be used to control submittals throughout the life of the contract. The submittal register and the progress schedules shall be coordinated.

3.3 SCHEDULING

Submittals covering component items forming a system or items that are interrelated shall be scheduled to be coordinated and submitted concurrently. Certifications to be submitted with the pertinent drawings shall be so scheduled. Adequate time (15 calendar days for FIO submittals; 30 calender days for GA submittals and re-submittals; 45 calendar days for submittals requesting variation or deviation from contract requirements) shall be allowed and shown on the register for review and approval. No delay damages or time extensions will be allowed for time lost in late submittals.

3.4 TRANSMITTAL FORM (ENG FORM 4025R)

The sample transmittal form (ENG Form 4025R) attached to this section shall be used for submitting both Government approved and information only submittals in accordance with the instructions on the reverse side of the form. These forms will be furnished to the Contractor. This form shall be properly completed by filling out all the heading blank spaces and identifying each item submitted. Special care shall be exercised to ensure proper listing of the specification paragraph and/or sheet number of the contract drawings pertinent to the data submitted for each item.

3.5 SUBMITTAL PROCEDURE

Submittals shall be made as follows:

3.5.1 Procedures

Submittals shall be prepared as specified with the required number of copies and delivered to:

U.S. Army Corps of Engineers
Wynne Area Office
Bennie House Center,
Highway 1 North, P.O. Box 729,
Wynne, Arkansas 72396-0729

3.5.2 Deviations

For submittals that include proposed deviations requested by the Contractor, the column "variation" of ENG Form 4025R shall be checked. The Contractor shall set forth in writing the reason for any deviations and annotate such deviations on the submittal. The Government reserves the right to rescind inadvertent approval of submittals containing unnoted deviations.

3.6 CONTROL OF SUBMITTALS

The Contractor shall carefully control his procurement operations to ensure that each individual submittal is made on or before the Contractor scheduled submittal date shown on the approved "Submittal Register."

3.7 GOVERNMENT APPROVED SUBMITTALS

Upon completion of review of submittals requiring Government approval, the submittals will be identified as having received approval by being so stamped and dated. Four copies of the submittal will be retained by the Contracting Officer and two (2) copies of the submittal will be returned to the Contractor.

3.8 INFORMATION ONLY SUBMITTALS

Normally submittals for information only will not be returned. Approval of the Contracting Officer is not required on information only submittals. The Government reserves the right to require the Contractor to resubmit any item found not to comply with the contract. This does not relieve the Contractor from the obligation to furnish material conforming to the plans and specifications; will not prevent the Contracting Officer from requiring removal and replacement of nonconforming material incorporated in the work; and does not relieve the Contractor of the requirement to furnish samples for testing by the Government laboratory or for check testing by the Government in those instances where the technical specifications so prescribe.

3.9 STAMPS

Stamps used by the Contractor on the submittal data to certify that the submittal meets contract requirements shall be similar to that shown on the following page:

CONTRACTOR
(Firm Name)

_____ Approved

_____ Approved with corrections as noted on submittal data and/or attached sheets(s)

SIGNATURE: _____

TITLE: _____

DATE: _____

End of Section

TRANSMITTAL OF SHOP DRAWINGS, EQUIPMENT DATA, MATERIAL SAMPLES OR MANUFACTURE'S CERTIFICATES OF COMPLIANCE (Read instructions on the reverse side prior to initiating this form)	DATE	TRANSMITTAL NO.

SECTION I - REQUEST FOR APPROVAL OF THE FOLLOWING ITEMS (This section will be initiated by the contractor)

TO:	FROM	CONTRACT NO.	CHECK ONE: [ ] THIS IS A NEW TRANSMITTAL [ ] THIS IS A RESUBMITTAL OF TRANSMITTAL _____

SPECIFICATION SECT. NO. (Cover only one section with each transmittal)	PROJECT TITLE AND LOCATION	CHECK ONE: THIS TRANSMITTAL IS FOR [ ] FIO [ ] GOV''T APPROVAL

ITEM NO.	DESCRIPTION OF ITEM SUBMITTED (Type size, model number/etc.)	MFG OR CONTR. CAT., CURVE DRAWING OR BROCHURE NO. (See instruction no. 8)	NO. OF COPIES	CONTRACT REFERENCE DOCUMENT		FOR CONTRACTOR USE CODE	VARIATION (See Instruction No. 6)	FOR CE USE CODE
				SPEC. PARA NO.	DRAWING SHEET NO.			
a.	b.	c.	d.	e.	f.	g.	h.	i.

REMARKS	I certify that the above submitted items have been reviewed in detail and are correct and in strict conformance with the contract drawings and specifications except as otherwise stated. _____ NAME AND SIGNATURE OF CONTRACTOR

SECTION II - APPROVAL ACTION

ENCLOSURE RETURNED (Listed by Item No.)	NAME, TITLE AND SIGNATURE OF APPROVING AUTHORITY	DATE

1. Section 1 will be initiated by the Contractor in the required number of copies.

2. Each transmittal shall be numbered consecutively in the space provided for "Transmittal No.". This number, in addition to the contract number, will form a serial number for identifying each submittal. For new submittals or resubmittals, mark the appropriate box; on resubmittals, insert transmittal number of last submission as well as the new submittal number.

3. The "Item No." will be the same "Item No." as indicated on ENG FORM 4288 for each entry on this form.

4. Submittals requiring expeditious handling will be submitted on a separate form.

5. Separate transmittal form will be used for submittals under separate sections of the specifications.

6. A check shall be placed in the "Variation" column when a submittal is not in accordance with the plans and specifications--also, a written statement to that effect shall be included in the space provided for "Remarks".

7. Form is self-transmittal, letter of transmittal is not required.

8. When a sample of material or Manufacturer's Certificate of Compliance is transmitted, indicate "Sample" or "Certificate" in column c, Section I.

9. U.S. Army Corps of Engineers approving authority will assign action codes as indicated below in space provided in Section I, column i to each item submitted. In addition they will ensure enclosures are indicated and attached to the form prior to return to the contractor. The Contractor will assign action codes as indicated below in Section I, column g, to each item submitted.

THE FOLLOWING ACTION CODES ARE GIVEN TO ITEMS SUBMITTED

A -- Approved as submitted.

B -- Approved, except as noted on drawings.

C -- Approved, except as noted on drawings. Refer to attached sheet resubmission required.

D -- Will be returned by separate correspondence.

E -- Disapproved (See attached).

F -- Receipt acknowledge.

FX -- Receipt acknowledged, does not comply as noted with contract requirements.

G -- Other *(Specify)*

10. Approval of items does not relieve the contractor from complying with all the requirements of the contract plans and specifi cations.

SUBMITTAL REGISTER
(ER 415-1-10)

CONTRACT NO.

TITLE AND LOCATION: DITCH 10 CULVERT PLACEMENT
MISSISSIPPI COUNTY, ARKANSAS

CONTRACTOR

SPECIFICATION SECTION: 02210

ACTIVITY NO. a	TRANS-MITTAL NO. b	ITEM NO. c	SPECIFICATION PARAGRAPH NUMBER d	DESCRIPTION OF ITEM SUBMITTED e	TYPE OF SUBMITTAL: DATA f	DRAWINGS g	INSTRUCTIONS h	SCHEDULES i	STATEMENTS j	REPORTS k	CERTIFICATES l	SAMPLES m	RECORDS n	CLASSIFICATION: INFORMATION ONLY o	GOVERNMENT APPROVED p	REVIEWER q	CONTRACTOR SCHEDULE DATES: SUBMIT r	APPROVAL NEEDED BY s	MATERIAL NEEDED BY t	CONTRACTOR ACTION: CODE u	DATE v	SUBMIT TO GOVERN-MENT w	GOVERNMENT ACTION: CODE x	DATE y	REMARKS z
			1.2	Materials Other Than Salable Timber									X	X											
			1.2	Weight Certificate	X									X											

SUBMITTAL REGISTER
(ER 415-1-10)

CONTRACT NO.

TITLE AND LOCATION: DITCH 10 CULVERT PLACEMENT
MISSISSIPPI COUNTY, ARKANSAS

CONTRACTOR

SPECIFICATION SECTION: 02215

ACTIVITY NO. a	TRANS-MITTAL NO. b	ITEM NO. c	SPECIFICATION PARAGRAPH NUMBER d	DESCRIPTION OF ITEM SUBMITTED e	TYPE OF SUBMITTAL: DATA f	DRAWINGS g	INSTRUCTIONS h	SCHEDULES i	STATEMENTS j	REPORTS k	CERTIFICATES l	SAMPLES m	RECORDS n	CLASSIFICATION: INFORMATION ONLY o	GOVERNMENT APPROVED p	REVIEWER q	CONTRACTOR SCHEDULE DATES: SUBMIT r	APPROVAL NEEDED BY s	MATERIAL NEEDED BY t	CONTRACTOR ACTION: CODE u	DATE v	SUBMIT TO GOVERN-MENT w	GOVERNMENT ACTION: CODE x	DATE y	REMARKS z
			1.2	Geotextile							X			x											
			1.2	Geotextile								X			X										

SUBMITTAL REGISTER
(ER 415-1-10)

CONTRACT NO.

TITLE AND LOCATION: DITCH 10 CULVERT PLACEMENT
MISSISSIPPI COUNTY, ARKANSAS

CONTRACTOR

SPECIFICATION SECTION: 02216

ACTIVITY NO. a	TRANS-MITTAL NO. b	ITEM NO. c	SPECIFICATION PARAGRAPH NUMBER d	DESCRIPTION OF ITEM SUBMITTED e	TYPE OF SUBMITTAL: DATA f	DRAWINGS g	INSTRUCTIONS h	SCHEDULES i	STATEMENTS j	REPORTS k	CERTIFICATES l	SAMPLES m	RECORDS n	CLASSIFICATION: INFORMATION ONLY o	GOVERNMENT APPROVED p	REVIEWER q	CONTRACTOR SCHEDULE DATES: SUBMIT r	APPROVAL NEEDED BY s	MATERIAL NEEDED BY t	CONTRACTOR ACTION: CODE u	DATE v	SUBMIT TO GOVERN-MENT w	GOVERNMENT ACTION: CODE x	DATE y	REMARKS z
			1.4	Equipment	X									X											
			1.4	Sampling and Testing						X				x											
			1.4	Density						X				X											

SUBMITTAL REGISTER
(ER 415-1-10)

CONTRACT NO.

TITLE AND LOCATION: DITCH 10 CULVERT PLACEMENT
TIPTONVILLE, TENNESSEE

CONTRACTOR

SPECIFICATION SECTION: 02220

ACTIVITY NO. a	TRANS-MITTAL NO. b	ITEM NO. c	SPECIFICATION PARAGRAPH NUMBER d	DESCRIPTION OF ITEM SUBMITTED e	TYPE OF SUBMITTAL: DATA f	DRAWINGS g	INSTRUCTIONS h	SCHEDULES i	STATEMENTS j	REPORTS k	CERTIFICATES l	SAMPLES m	RECORDS n	CLASSIFICATION: INFORMATION ONLY o	GOVERNMENT APPROVED p	REVIEWER q	CONTRACTOR SCHEDULE DATES: SUBMIT r	APPROVAL NEEDED BY s	MATERIAL NEEDED BY t	CONTRACTOR ACTION: CODE u	DATE v	SUBMIT TO GOVERN-MENT w	GOVERNMENT ACTION: CODE x	DATE y	REMARKS z
			1.7	Equipment	X										X										
			1.5	Dewatering Plan		X			X	X					X										
			1.7	Falling Head Tests	X										X										
			1.7	Piezometer Readings	X										X										
			1.7	Monitoring of Sanding	X										X										
			1.7	Shop Drawings		X									X										

SUBMITTAL REGISTER
(ER 415-1-10)

CONTRACT NO.

TITLE AND LOCATION: DITCH 10 CULVERT PLACEMENT
MISSISSIPPI COUNTY, ARKANSAS

CONTRACTOR

SPECIFICATION SECTION: 02221

ACTIVITY NO. a	TRANS-MITTAL NO. b	ITEM NO. c	SPECIFICATION PARAGRAPH NUMBER d	DESCRIPTION OF ITEM SUBMITTED e	TYPE OF SUBMITTAL: DATA f	DRAWINGS g	INSTRUCTIONS h	SCHEDULES i	STATEMENTS j	REPORTS k	CERTIFICATES l	SAMPLES m	RECORDS n	CLASSIFICATION: INFORMATION ONLY o	GOVERNMENT APPROVED p	REVIEWER q	CONTRACTOR SCHEDULE DATES: SUBMIT r	APPROVAL NEEDED BY s	MATERIAL NEEDED BY t	CONTRACTOR ACTION: CODE u	DATE v	SUBMIT TO GOVERN-MENT w	GOVERNMENT ACTION: CODE x	DATE y	REMARKS z
			1.2	Testing						X				X											

ENG FORM 4288-R, MAR 95 EDITION OF SEP 93 IS OBSOLETE PAGE_____ OF_____ PAGES (Proponent CEMP-CE)

SUBMITTAL REGISTER
(ER 415-1-10)

CONTRACT NO.

TITLE AND LOCATION: DITCH 10 CULVERT PLACEMENT
MISSISSIPPI COUNTY, ARKANSAS

CONTRACTOR

SPECIFICATION SECTION: 02222

ACTIVITY NO. a	TRANS-MITTAL NO. b	ITEM NO. c	SPECIFICATION PARAGRAPH NUMBER d	DESCRIPTION OF ITEM SUBMITTED e	TYPE OF SUBMITTAL: DATA f	DRAWINGS g	INSTRUCTIONS h	SCHEDULES i	STATEMENTS j	REPORTS k	CERTIFICATES l	SAMPLES m	RECORDS n	CLASSIFICATION: INFORMATION ONLY o	GOVERNMENT APPROVED p	REVIEWER q	CONTRACTOR SCHEDULE DATES: SUBMIT r	APPROVAL NEEDED BY s	MATERIAL NEEDED BY t	CONTRACTOR ACTION: CODE u	DATE v	SUBMIT TO GOVERN-MENT w	GOVERNMENT ACTION: CODE x	DATE y	REMARKS z
			1.2	Layout		X								X											
			1.2	Testing		X								X											
			1.2	Compaction	X										X										

SUBMITTAL REGISTER
(ER 415-1-10)

CONTRACT NO.

TITLE AND LOCATION: Ditch 10 Culvert

CONTRACTOR

SPECIFICATION SECTION: 02400

ACTIVITY NO. a	TRANS-MITTAL NO. b	ITEM NO. c	SPECIFICATION PARAGRAPH NUMBER d	DESCRIPTION OF ITEM SUBMITTED e	TYPE OF SUBMITTAL: DATA f	DRAWINGS g	INSTRUCTIONS h	SCHEDULES i	STATEMENTS j	REPORTS k	CERTIFICATES l	SAMPLES m	RECORDS n	CLASSIFICATION: INFORMATION ONLY o	GOVERNMENT APPROVED p	REVIEWER q	CONTRACTOR SCHEDULE DATES: SUBMIT r	APPROVAL NEEDED BY s	MATERIAL NEEDED BY t	CONTRACTOR ACTION: CODE u	DATE v	SUBMIT TO GOVERN-MENT w	GOVERNMENT ACTION: CODE x	DATE y	REMARKS z
			3.1.3	Pipe and Fittings	X									X											
			2.1.5	Outlet Screen		X									X										

SUBMITTAL REGISTER
(ER 415-1-10)

CONTRACT NO.

TITLE AND LOCATION: DITCH 10 CULVERT PLACEMENT
MISSISSIPPI COUNTY, ARKANSAS

CONTRACTOR

SPECIFICATION SECTION 02464

ACTIVITY NO. a	TRANS-MITTAL NO. b	ITEM NO. c	SPECIFICATION PARAGRAPH NUMBER d	DESCRIPTION OF ITEM SUBMITTED e	TYPE OF SUBMITTAL: DATA f	DRAWINGS g	INSTRUCTIONS h	SCHEDULES i	STATEMENTS j	REPORTS k	CERTIFICATES l	SAMPLES m	RECORDS n	CLASSIFICATION: INFORMATION ONLY o	GOVERNMENT APPROVED p	REVIEWER q	CONTRACTOR SCHEDULE DATES: SUBMIT r	APPROVAL NEEDED BY s	MATERIAL NEEDED BY t	CONTRACTOR ACTION: CODE u	DATE v	SUBMIT TO GOVERN-MENT w	GOVERNMENT ACTION: CODE x	DATE y	REMARKS z
			1.2	Metal Sheet Piling		X									X										
			1.2	Pile Driving Equipment				X						X											
			1.2	Pulling and Redriving					X						X										
			1.2	Interlocked Joint Strength						X					X										
			1.2	Material Test						X				X											
			1.2	Driving Operations									X	X											

SUBMITTAL REGISTER
(ER 415-1-10)

CONTRACT NO.

TITLE AND LOCATION: DITCH 10 CULVERT PLACEMENT
MISSISSIPPI COUNTY, ARKANSAS

CONTRACTOR

SPECIFICATION SECTION 02546

ACTIVITY NO. a	TRANS-MITTAL NO. b	ITEM NO. c	SPECIFICATION PARAGRAPH NUMBER d	DESCRIPTION OF ITEM SUBMITTED e	TYPE OF SUBMITTAL: DATA f	DRAWINGS g	INSTRUCTIONS h	SCHEDULES i	STATEMENTS j	REPORTS k	CERTIFICATES l	SAMPLES m	RECORDS n	CLASSI-FICATION: INFORMATION ONLY o	GOVERNMENT APPROVED p	REVIEWER q	CONTRACTOR SCHEDULE DATES: SUBMIT r	APPROVAL NEEDED BY s	MATERIAL NEEDED BY t	CONTRACTOR ACTION: CODE u	DATE v	SUBMIT TO GOVERN-MENT w	GOVERNMENT ACTION: CODE x	DATE y	REMARKS z
			1.2	Materials	X						X	X			X										

ENG FORM 4288-R, MAR 95 EDITION OF SEP 93 IS OBSOLETE PAGE_____ OF_____ PAGES (Proponent CEMP-CE)

SUBMITTAL REGISTER
(ER 415-1-10)

CONTRACT NO.

TITLE AND LOCATION: DITCH 10 CULVERT PLACEMENT
MISSISSIPPI COUNTY, ARKANSAS

CONTRACTOR

SPECIFICATION SECTION: 02720

ACTIVITY NO. a	TRANS-MITTAL NO. b	ITEM NO. c	SPECIFICATION PARAGRAPH NUMBER d	DESCRIPTION OF ITEM SUBMITTED e	TYPE OF SUBMITTAL: DATA f	DRAWINGS g	INSTRUCTIONS h	SCHEDULES i	STATEMENTS j	REPORTS k	CERTIFICATES l	SAMPLES m	RECORDS n	CLASSIFICATION: INFORMATION ONLY o	GOVERNMENT APPROVED p	REVIEWER q	CONTRACTOR SCHEDULE DATES: SUBMIT r	APPROVAL NEEDED BY s	MATERIAL NEEDED BY t	CONTRACTOR ACTION: CODE u	DATE v	SUBMIT TO GOVERN-MENT w	GOVERNMENT ACTION: CODE x	DATE y	REMARKS z
			1.2	Pipe Placing			X							X											
			1.2	Emergency Closure Plan					X						X										
			1.2	Pipe for Culverts and Storm Drains								X			X										

SUBMITTAL REGISTER
(ER 415-1-10)

CONTRACT NO.

TITLE AND LOCATION: DITCH 10 CULVERT PLACEMENT
MISSISSIPPI COUNTY, ARKANSAS

CONTRACTOR

SPECIFICATION SECTION: 02935

ACTIVITY NO. a	TRANS-MITTAL NO. b	ITEM NO. c	SPECIFICATION PARAGRAPH NUMBER d	DESCRIPTION OF ITEM SUBMITTED e	TYPE OF SUBMITTAL: DATA f	DRAWINGS g	INSTRUCTIONS h	SCHEDULES i	STATEMENTS j	REPORTS k	CERTIFICATES l	SAMPLES m	RECORDS n	CLASSIFICATION: INFORMATION ONLY o	GOVERNMENT APPROVED p	REVIEWER q	CONTRACTOR SCHEDULE DATES: SUBMIT r	APPROVAL NEEDED BY s	MATERIAL NEEDED BY t	CONTRACTOR ACTION: CODE u	DATE v	SUBMIT TO GOVERN-MENT w	GOVERNMENT ACTION: CODE x	DATE y	REMARKS z
			1.2	Manufacturer's Literature	X									X											
			1.2	Equipment List				X						X											
			1.2	Delivery					X						X										
			1.2	Maintenance Report					X						X										
			1.2	Turf Establishment Period				X						X											
			1.2	Seed							X				X										
			1.2	Fertilizer							X				X										
			1.2	Agriculture Limestone							X			X											
			1.2	Peat							X			X											
			1.2	Asphalt Adhesive							X			X											
			1.2	Topsoil							X			X											

SUBMITTAL REGISTER
(ER 415-1-10)

CONTRACT NO.

TITLE AND LOCATION: DITCH 10 CULVERT PLACEMENT
MISSISSIPPI COUNTY, ARKANSAS

CONTRACTOR

SPECIFICATION SECTION: 03101

ACTIVITY NO. a	TRANS-MITTAL NO. b	ITEM NO. c	SPECIFICATION PARAGRAPH NUMBER d	DESCRIPTION OF ITEM SUBMITTED e	TYPE OF SUBMITTAL: DATA f	DRAWINGS g	INSTRUCTIONS h	SCHEDULES i	STATEMENTS j	REPORTS k	CERTIFICATES l	SAMPLES m	RECORDS n	CLASSIFICATION: INFORMATION ONLY o	GOVERNMENT APPROVED p	REVIEWER q	CONTRACTOR SCHEDULE DATES: SUBMIT r	APPROVAL NEEDED BY s	MATERIAL NEEDED BY t	CONTRACTOR ACTION: CODE u	DATE v	SUBMIT TO GOVERN-MENT w	GOVERNMENT ACTION: CODE x	DATE y	REMARKS z
			1.3	Materials	X									X											
			1.3	Shop Drawings		X									X										
			1.3	Shop Drawings		X									X										
			1.3	Inspection						X					X										

SUBMITTAL REGISTER
(ER 415-1-10)

CONTRACT NO.

TITLE AND LOCATION: DITCH 10 CULVERT PLACEMENT
MISSISSIPPI COUNTY, ARKANSAS

CONTRACTOR

SPECIFICATION SECTION: 03210

ACTIVITY NO. a	TRANS-MITTAL NO. b	ITEM NO. c	SPECIFICATION PARAGRAPH NUMBER d	DESCRIPTION OF ITEM SUBMITTED e	TYPE OF SUBMITTAL: DATA f	DRAWINGS g	INSTRUCTIONS h	SCHEDULES i	STATEMENTS j	REPORTS k	CERTIFICATES l	SAMPLES m	RECORDS n	CLASSIFICATION: INFORMATION ONLY o	GOVERNMENT APPROVED p	REVIEWER q	CONTRACTOR SCHEDULE DATES: SUBMIT r	APPROVAL NEEDED BY s	MATERIAL NEEDED BY t	CONTRACTOR ACTION: CODE u	DATE v	SUBMIT TO GOVERN-MENT w	GOVERNMENT ACTION: CODE x	DATE y	REMARKS z
			1.2	Fabrication & Placement		X									X										
			1.2	Materials						X				X											
			1.2	Tests, Inspections, & Verifications						X				X											
			1.2	Materials									X	X											
			1.2	Shop Drawings		X									X										

SUBMITTAL REGISTER
(ER 415-1-10)

CONTRACT NO.

TITLE AND LOCATION: DITCH 10 CULVERT PLACEMENT
MISSISSIPPI COUNTY, ARKANSAS

CONTRACTOR

SPECIFICATION SECTION: 03301

ACTIVITY NO. a	TRANS-MITTAL NO. b	ITEM NO. c	SPECIFICATION PARAGRAPH NUMBER d	DESCRIPTION OF ITEM SUBMITTED e	TYPE OF SUBMITTAL: DATA f	DRAWINGS g	INSTRUCTIONS h	SCHEDULES i	STATEMENTS j	REPORTS k	CERTIFICATES l	SAMPLES m	RECORDS n	CLASSIFICATION: INFORMATION ONLY o	GOVERNMENT APPROVED p	REVIEWER q	CONTRACTOR SCHEDULE DATES: SUBMIT r	APPROVAL NEEDED BY s	MATERIAL NEEDED BY t	CONTRACTOR ACTION: CODE u	DATE v	SUBMIT TO GOVERN-MENT w	GOVERNMENT ACTION: CODE x	DATE y	REMARKS z
			1.2	Concrete Mix Proportioning	X										X										
			1.2	Conveying Equipment & Materials	X									X											
			1.2	Placing Equipment & Methods	X									X											
			1.2	Testing Technicians & Inspectors					X						X										
			1.2	Construction Joint Treatment					X						X										
			1.2	Curing and Protection					X						X										
			1.2	Cold-Weather Placing					X						X										
			1.2	Hot-Weather Placing					X						X										
			1.2	Tests and Inspections						X					X										
			1.2	Premolded Expansion Joint Filler Strips						X				X											
			1.2	Cementition Materials							X				X										
			1.2	Impervions Sheet Curing Material							X			X											
			1.2	Air-Entraining Admixture							X			X											
			1.2	Other Chemical Admixture							X			X											
			1.2	Membrane Forming Curing Compound							X			X											
			1.2	Epoxy Resin							X			X											
			1.2	Latex Bonding Compound							X			X											
			1.2	Nonshrink Grout							X			X											
			1.2	Field Molded Sealants and Primer								X			X										
			1.2	Waste Disposal					X						X										

SUBMITTAL REGISTER
(ER 415-1-10)

CONTRACT NO.

TITLE AND LOCATION: DITCH 10 CULVERT PLACEMENT
MISSISSIPPI COUNTY, ARKANSAS

CONTRACTOR

SPECIFICATION SECTION: 05055

ACTIVITY NO. a	TRANS-MITTAL NO. b	ITEM NO. c	SPECIFICATION PARAGRAPH NUMBER d	DESCRIPTION OF ITEM SUBMITTED e	TYPE OF SUBMITTAL: DATA f	DRAWINGS g	INSTRUCTIONS h	SCHEDULES i	STATEMENTS j	REPORTS k	CERTIFICATES l	SAMPLES m	RECORDS n	CLASSIFICATION: INFORMATION ONLY o	GOVERNMENT APPROVED p	REVIEWER q	CONTRACTOR SCHEDULE DATES: SUBMIT r	APPROVAL NEEDED BY s	MATERIAL NEEDED BY t	CONTRACTOR ACTION: CODE u	DATE v	SUBMIT TO GOVERN-MENT w	GOVERNMENT ACTION: CODE x	DATE y	REMARKS z
			1.4	Welding Procedure Qualifications					X						X										
			1.4	Welder, Welding Operator, and Tacker Qualification					X						X										
			1.4	Inspector Qualifications					X					X											
			1.4	Quality Control									X		X										

SUBMITTAL REGISTER
(ER 415-1-10)

CONTRACT NO.

TITLE AND LOCATION: DITCH 10 CULVERT PLACEMENT
MISSISSIPPI COUNTY, ARKANSAS

CONTRACTOR

SPECIFICATION SECTION: 05914

ACTIVITY NO. a	TRANS-MITTAL NO. b	ITEM NO. c	SPECIFICATION PARAGRAPH NUMBER d	DESCRIPTION OF ITEM SUBMITTED e	TYPE OF SUBMITTAL: DATA f	DRAWINGS g	INSTRUCTIONS h	SCHEDULES i	STATEMENTS j	REPORTS k	CERTIFICATES l	SAMPLES m	RECORDS n	CLASSIFICATION: INFORMATION ONLY o	GOVERNMENT APPROVED p	REVIEWER q	CONTRACTOR SCHEDULE DATES: SUBMIT r	APPROVAL NEEDED BY s	MATERIAL NEEDED BY t	CONTRACTOR ACTION: CODE u	DATE v	SUBMIT TO GOVERN-MENT w	GOVERNMENT ACTION: CODE x	DATE y	REMARKS z
			1.3	Material Mechanical & Equipment	X										X										
			1.3	Design and Performance Requirements	X									X											
			1.3	Shop Assembly and Testing	X									X											
			1.3	Field Testing	X										X										
			1.3	Detail Drawings		X									X										
			1.3	Materials Orders				X						X											
			1.3	Material List				X						X											
			1.3	Shipping Bill				X						X											
			1.3	Shop Tests, Inspections, and Verifications						X				X											
			1.3	Acceptance Trail Operation and Test						X				X											
			1.3	Materials Disposition Records									X	X											
			1.3	Operation and Maintenance Manuals			X								X										

DIVISION 1 - GENERAL REQUIREMENTS

SECTION 01451

CONTRACTOR QUALITY CONTROL

TABLE OF CONTENTS

PART 1 GENERAL 1
1.1 REFERENCES 1
1.2 PAYMENT 1

PART 2 PRODUCTS (Not Applicable) 1

PART 3 EXECUTION 1
3.1 GENERAL 1
3.2 QUALITY CONTROL PLAN 2
3.2.1 General 2
3.2.2 Content of the CQC Plan 2
3.2.3 Acceptance of Plan 3
3.2.4 Notification of Changes 3
3.3 COORDINATION MEETING 3
3.4 QUALITY CONTROL ORGANIZATION 4
3.4.1 CQC System Manager 4
3.4.2 CQC Staff 4
3.4.3 Additional Requirement 4
3.5 SUBMITTALS 4
3.6 CONTROL 4
3.6.1 Preparatory Phase 4
3.6.2 Initial Phase 5
3.6.3 Follow-up Phase 6
3.6.4 Additional Preparatory and Initial Phases 6
3.7 TESTS 6
3.7.1 Testing Procedure 6
3.7.2 Testing Laboratories 7
3.7.2.1 Capability Check 7
3.7.2.2 Capability Recheck 7
3.7.3 On-Site Laboratory 7
3.7.4 Furnishing or Transportation of Samples for Testing 7
3.8 COMPLETION INSPECTION 8
3.9 DOCUMENTATION 8
3.10 NOTIFICATION OF NONCOMPLIANCE (NOT USED) 9

SECTION 01451

CONTRACTOR QUALITY CONTROL

PART 1 GENERAL

1.1 REFERENCES

The publications listed below form a part of this specification to the extent referenced. The publications are referred to in the text by basic designation only.

AMERICAN SOCIETY FOR TESTING AND MATERIALS (ASTM)

ASTM D 3740	(1994a) Minimum Requirements for Agencies Engaged in the Testing and/or Inspection of Soil and Rock as Used in Engineering Design and Construction
ASTM E 329	(1993b) Agencies Engaged in the Testing and/or Inspection of Materials Used in Construction

1.2 PAYMENT

Separate payment will not be made for providing and maintaining an effective Quality Control program, and all costs associated therewith shall be included in the applicable unit prices or lump-sum prices contained in the Bidding Schedule.

PART 2 PRODUCTS (NOT APPLICABLE)

PART 3 EXECUTION

3.1 GENERAL

The Contractor is responsible for quality control and shall establish and maintain an effective quality control system in compliance with the Contract Clause entitled "Inspection of Construction." The quality control system shall consist of plans, procedures, and organization necessary to produce an end product that complies with the contract requirements. The system shall cover all construction operations, both on-site and off-site, and shall be keyed to the proposed construction sequence.

3.2 QUALITY CONTROL PLAN

3.2.1 General

The Contractor shall furnish for review by the Government, not later than 21 calendar days after receipt of Notice of Award of the contract, the Contractor Quality Control (CQC) Plan proposed to implement the requirements of the Contract Clause entitled "Inspection of Construction." The plan shall identify personnel, procedures, control, instructions, test, records, and forms to be used. The Government will consider an interim plan for the first 15 days of operation. Construction will be permitted to begin only after acceptance of the CQC Plan or acceptance of an interim plan applicable to the particular feature of work to be started. Work outside of the features of work included in an accepted interim plan will not be permitted to begin until acceptance of a CQC Plan or another interim plan containing the additional features of work to be started.

3.2.2 Content of the CQC Plan

The CQC plan shall include, as a minimum, the following to cover all construction operations, both on-site and off-site, including work by subcontractors, fabricators, suppliers, and purchasing agents:

a. A description of the quality control organization, including a chart showing lines of authority and acknowledgment that the CQC staff shall implement the three phase control system for all aspects of the work specified. The staff shall include a CQC system manager who shall report to the project manager or someone higher in the Contractor's organization. Project manager in this context shall mean the individual with responsibility for the overall management of the project including quality and production.

b. The name, qualifications (in resume format), duties, responsibilities, and authorities of each person assigned a CQC function.

c. A copy of the letter to the CQC System Manager signed by an authorized official of the firm which describes the responsibilities and delegates sufficient authorities to adequately perform the functions of the CQC System Manager, including authority to stop work which is not in compliance with the contract. The CQC System Manager shall issue letters of direction to all other various quality control representatives outlining duties, authorities, and responsibilities. Copies of these letters will also be furnished to the Government.

d. Procedures for scheduling, reviewing, certifying, and managing submittals, including those of subcontractors, off-site fabricators, suppliers, and purchasing agents. These procedures shall be in accordance with SECTION 1330 – SUBMITTAL PROCEDURES.

e. Control, verification, and acceptance testing procedures for each specific test to include the test name, specification paragraph requiring test, feature of work to be

tested, test frequency, and person responsible for each test. (Laboratory facilities will be approved by the Contracting Officer.)

f. Procedures for tracking preparatory, initial, and follow-up control phases and control, verification, and acceptance tests including documentation.

g. Procedures for tracking construction deficiencies from identification through acceptable corrective action. These procedures will establish verification that identified deficiencies have been corrected.

h. Reporting procedures, including proposed reporting formats.

i. A list of the definable features of work. A definable feature of work is a task which is separate and distinct from other tasks and has separate control requirements. It could be identified by different trades or disciplines, or it could be work by the same trade in a different environment. Although each section of the specifications may generally be considered as a definable feature of work, there are frequently more than one definable feature under a particular section. This list will be agreed upon during the coordination meeting.

3.2.3 Acceptance of Plan

Acceptance of the Contractor's plan is required prior to the start of construction. Acceptance is conditional and will be predicated on satisfactory performance during the construction. The Government reserves the right to require the Contractor to make changes in his CQC plan and operations including removal of personnel, as necessary, to obtain the quality specified.

3.2.4 Notification of Changes

After acceptance of the QC plan, the Contractor shall notify the Contracting Officer in writing a minimum of seven calendar days prior to any proposed change. Proposed changes are subject to acceptance by the Contracting Officer.

3.3 COORDINATION MEETING

After the Preconstruction Conference, before start of construction, and prior to acceptance by the Government of the Quality Control Plan, the Contractor shall meet with the Contracting Officer or Authorized Representative and discuss the Contractor's quality control system. During the meeting, a mutual understanding of the system details shall be developed, including the forms for recording the CQC operations, control activities, testing, administration of the system for both on-site and off-site work, and the interrelationship of Contractor's Management and control with the Government's Quality Assurance. Minutes of the meeting shall be prepared by the Government and signed by both the Contractor and the Contracting Officer. The minutes shall become a part of the contract file. There may be occasions when subsequent conferences will be called by either party to reconfirm mutual understandings and/or address deficiencies in the CQC system or procedures which may

require corrective action by the Contractor.

3.4 QUALITY CONTROL ORGANIZATION

3.4.1 CQC System Manager

The Contractor shall identify an individual within his organization at the worksite who shall be responsible for overall management of CQC and have the authority to act in all CQC matters for the Contractor. This CQC System Manager shall be subject to acceptance by the Contracting Officer. The CQC System Manager shall be assigned as System Manager but may have other duties in addition to quality control.

3.4.2 CQC Staff

A staff shall be maintained under the direction of the CQC System Manager to perform all CQC activities. An alternate will be identified to serve in the absence of the CQC System Manager. The staff must be of sufficient size to ensure adequate CQC coverage of all work phases, work shifts, and work crews involved in the construction. These personnel may perform other duties, but must be fully qualified by experience and technical training to perform their assigned CQC responsibilities and must be allowed sufficient time to carry out these responsibilities. The CQC plan will clearly state the duties and responsibilities of each staff member. All CQC Staff members or replacements shall be subject to acceptance by the Contracting Officer.

3.4.3 Additional Requirement

In addition to the above requirements, the CQC System Manager and his alternate shall complete the course entitled "Construction Quality Management for Contractors". This course is periodically offered by the Memphis District as well as other Corps Districts.

3.5 SUBMITTALS

Submittals shall be in accordance with SECTION 1330 – SUBMITTAL PROCEDURES. The CQC organization shall be responsible for certifying that all submittals are in compliance with the contract requirements.

3.6 CONTROL

The controls shall include at least three phases of control to be conducted by the CQC System Manager for all definable features of work, as follows:

3.6.1 Preparatory Phase

This phase shall be performed prior to beginning work on each definable feature of work and shall include:

a. A review of each paragraph of applicable specifications.

b. A review of the contract drawings.

c. A check to assure that all materials and/or equipment have been tested, submitted, and approved.

d. A check to assure that provisions have been made to provide required control inspection and testing.

e. Examination of the work area to assure that all required preliminary work has been completed and is in compliance with the contract.

f. A physical examination of required materials, equipment, and sample work to assure that they are on hand, conform to approved shop drawings or submitted data, and are properly stored.

g. A review of the appropriate activity hazard analysis to assure safety requirements are met.

h. Discussion of procedures for constructing the work including repetitive deficiencies. Document construction tolerances and workmanship standards for that phase of work.

i. A check to ensure that the portion of the plan for the work to be performed has been accepted by the Contracting Officer.

j. The Government shall be notified at least 24 hours in advance of beginning any of the required action of the preparatory phase. This phase shall include a meeting conducted by the CQC System Manager and attended by the superintendent, other CQC personnel (as applicable), and the foreman responsible for the definable feature. The results of the preparatory phase actions shall be documented by separate minutes prepared by the CQC System Manager and attached to the daily CQC report. The Contractor shall instruct applicable workers as to the acceptable level of workmanship required in order to meet contract specifications.

3.6.2 Initial Phase

This phase shall be accomplished at the beginning of a definable feature of work. The following shall be accomplished:

a. A check of preliminary work to ensure that it is in compliance with contract requirements. Review minutes of the preparatory meeting.

b. Verification of full contract compliance. Verify required control inspection and

testing.

c. Establish level of workmanship and verify that it meets minimum acceptable workmanship standards. Compare with sample panels as appropriate.

d. Resolve all differences.

e. Check safety to include compliance with and upgrading of the safety plan and activity hazard analysis. Review the activity analysis with each worker.

f. The Government shall be notified at least 24 hours in advance of beginning the initial phase. Separate minutes of this phase shall be prepared by the CQC System Manager and attached to the daily CQC report. Exact location of initial phase shall be indicated for future reference and comparison with follow-up phases.

g. The initial phase should be repeated for each new crew to work on-site, or any time acceptable specified quality standards are not being met.

3.6.3 Follow-up Phase

Daily checks shall be performed to assure continuing compliance with contract requirements, including control testing, until completion of the particular feature of work. The checks shall be made a matter of record in the CQC documentation. Final follow-up checks shall be conducted and all deficiencies corrected prior to the start of additional features of work which may be affected by the deficient work. The Contractor shall not build upon or conceal non-conforming work.

3.6.4 Additional Preparatory and Initial Phases

As determined by the Government, additional preparatory and initial phases may be conducted on the same definable features of work if the quality of on-going work is unacceptable, if there are changes in the applicable CQC staff, on-site production supervision or work crew, if work on a definable feature is resumed after a substantial period of inactivity, or if other problems develop.

3.7 TESTS

3.7.1 Testing Procedure

The Contractor shall perform specified or required tests to verify that control measures are adequate to provide a product which conforms to contract requirements. Testing includes operation and/or acceptance tests when specified. The Contractor shall procure the services of a Corps of Engineers approved testing laboratory or establish an approved testing laboratory at the project site. The Contractor shall perform the following activities and record and provide the following data:

a. Verify that testing procedures comply with contract requirements.

b. Verify that facilities and testing equipment are available and comply with testing standards.

c. Check test instrument calibration data against certified standards.

d. Verify that recording forms and test identification control number system, including all of the test documentation requirements, have been prepared.

e. Results of all tests taken, both passing and failing tests, will be recorded on the CQC report for the date taken. Specification paragraph reference, location where tests were taken, and the sequential control number identifying the test will be given. If approved by the Contracting Officer, actual test reports may be submitted later with a reference to the test number and date taken. An information copy of tests performed by an off-site or commercial test facility will be provided directly to the Contracting Officer. Failure to submit timely test reports as stated may result in nonpayment for related work performed and disapproval of the test facility for this contract.

3.7.2 Testing Laboratories

3.7.2.1 Capability Check

The Contracting Officer reserves the right to check laboratory equipment in the proposed laboratory for compliance with the standards set forth in the contract specifications and to check the laboratory technician's testing procedures and techniques. Laboratories utilized for testing soils, concrete, asphalt, and steel shall meet criteria detailed in ASTM D 3740 and ASTM E 329.

3.7.2.2 Capability Recheck

If the selected laboratory fails the capability check, the Contractor will be assessed a charge to reimburse the Government for each succeeding recheck of the laboratory or the checking of a subsequently selected laboratory. Such costs will be deducted from the contract amount due the Contractor. There will be no extension of time allowed due to necessity to perform capability rechecks.

3.7.3 On-Site Laboratory

The Contracting Officer reserves the right to utilize the Contractor's control testing laboratory and equipment to make assurance tests and to check the Contractor's testing procedures, techniques, and test results at no additional cost to the Government.

3.7.4 Furnishing or Transportation of Samples for Testing

Costs incidental to the transportation of samples or materials will be borne by the Contractor. Samples of materials for test verification and acceptance testing by the Government shall be

delivered by the Contractor to a location specified by the Contracting Officer.

3.8 COMPLETION INSPECTION

At the completion of all work or any increment thereof established by a completion time stated in the Special Contract Requirements entitled "Commencement, Prosecution, and Completion of Work," or stated elsewhere in the specifications, the CQC System Manager shall conduct an inspection of the work and develop a "punch list" of items which do not conform to the approved drawings and specifications. Such a list of deficiencies shall be included in the CQC documentation, as required by paragraph DOCUMENTATION below, and shall include the estimated date by which the deficiencies will be corrected. The CQC System Manager or staff shall make a second inspection to ascertain that all deficiencies have been corrected and so notify the Government. These inspections and any deficiency corrections required by this paragraph will be accomplished within the time stated for completion of the entire work or any particular increment thereof if the project is divided into increments by separate completion dates.

3.9 DOCUMENTATION

The Contractor shall maintain current records providing factual evidence that required quality control activities and/or tests have been performed. These records shall include the work of subcontractors and suppliers and shall be on an acceptable form that includes, as a minimum, the following information:

a. Contractor/subcontractor and their area of responsibility.

b. Operating plant/equipment with hours worked, idle, or down for repair.

c. Work performed each day, giving location, description, and by whom. When Network Analysis (NAS) is used, identify each phase of work performed each day by NAS activity number.

d. Test and/or control activities performed with results and references to specifications/drawings requirements. The control phase should be identified (Preparatory, Initial, Follow-up). List deficiencies noted along with corrective action.

e. Quantity of materials received at the site with statement as to acceptability, storage, and reference to specifications/drawings requirements.

f. Submittals reviewed, with contract reference, by whom, and action taken.

g. Off-site surveillance activities, including actions taken.

h. Job safety evaluations stating what was checked, results, and instructions or corrective actions.

i. Instructions given/received and conflicts in plans and/or specifications.

j. Contractor's verification statement.

These records shall indicate a description of trades working on the project; the number of personnel working; weather conditions encountered; and any delays encountered. These records shall cover both conforming and deficient features and shall include a statement that equipment and materials incorporated in the work and workmanship comply with the contract. The original and two copies of these records in report form shall be furnished to the Government daily within 24 hours after the date(s) covered by the report, except that reports need not be submitted for days on which no work is performed. As a minimum, one report shall be prepared and submitted for every seven days of no work and on the last day of a no work period. All calendar days shall be accounted for throughout the life of the contract. The first report following a day of no work shall be for that day only. Reports shall be signed and dated by the CQC System Manager. The report from the CQC System Manager shall include copies of test reports and copies of reports prepared by all subordinate quality control personnel.

3.10 NOTIFICATION OF NONCOMPLIANCE (NOT USED)

End of Section

DIVISION 1 - GENERAL REQUIREMENTS

SECTION 01452

PROJECT SIGN

TABLE OF CONTENTS

PART 1 GENERAL……..……..……..….1
1.1 SCOPE……..……..……..…….1
1.2 PROJECT SIGN……..……1
1.3 PAYMENT…….2

PART 2 PRODUCTS (Not Applicable)…….2

PART 3 EXECUTION (Not Applicable)……2

SECTION 01452

PROJECT SIGN

PART 1 GENERAL

1.1 SCOPE

The work covered by this section consists of furnishing, erecting, maintaining, and removing project sign.

1.2 PROJECT SIGN

The Contractor shall furnish, erect, and maintain one double faced project sign at the project site, at the specific location designated by the Contracting Officer. The sign shall be constructed of 3/4-inch A-C exterior plywood or 22-gage metal, mounted on a substantial framework of 2-inch material. Size, lettering, color and paint shall conform to the details shown on the drawing "Temporary Project Sign" included at the end of this section. Upon request, the Government will furnish without cost to the Contractor two decals of the Engineer Castle. The sign shall be erected as soon as practicable, but not later than 15 calendar days after the date established for commencement of work. The sign shall be removed upon completion of all other construction work under the contract and will become the property of the Contractor.

1.3 PAYMENT

No separate payment will be made for erecting, maintaining and removing the project sign, and all costs in connection therewith will be considered an incidental obligation of the Contractor.

PART 2 PRODUCTS (Not Applicable)

PART 3 EXECUTION (Not Applicable)

--End of Section--

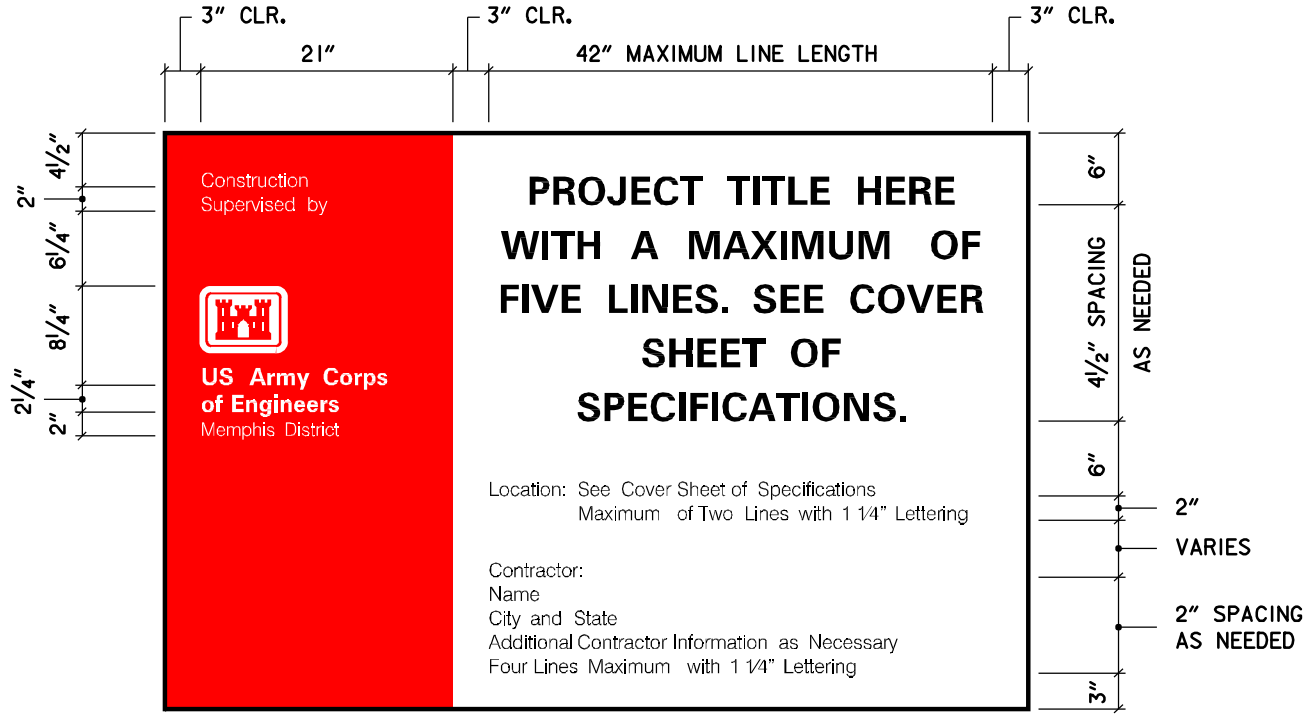

ELEVATION

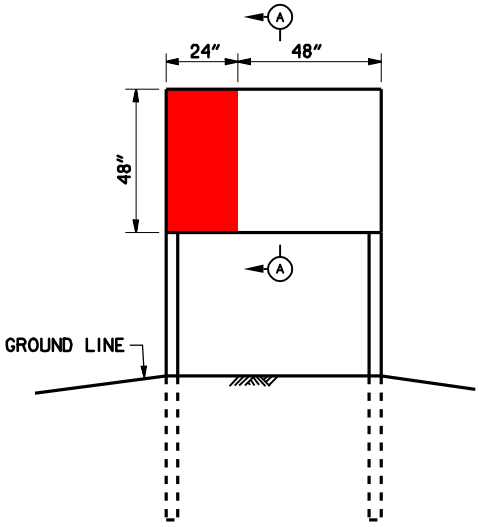

ELEVATION

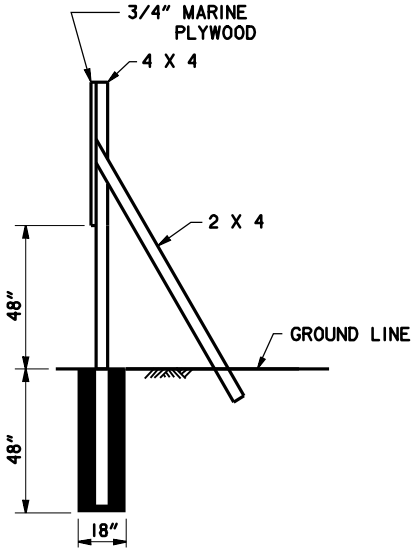

SECTION A–A

SPECIFICATIONS

1. SIGN PANEL SHALL BE 4' x 6' x 3/4" MARINE PLYWOOD OR 22 GAGE SHEET METAL.
2. POSTS AND BRACING SHALL BE TREATED, NO.1 GRADE YELLOW PINE.
3. ALL EXPOSED SURFACES SHALL BE GIVEN ONE COAT OF LINSEED OIL AND WIPED PRIOR TO PRIMING.
4. ALL EXPOSED SURFACES SHALL BE GIVEN ONE COAT OF WHITE AS PRIMER. SECOND COAT SHALL BE COMMUNICATIONS RED ON LEFT AND WHITE ELSEWHERE.
5. THE LEFT SECTION SHALL BE RED WITH WHITE LEGEND. THE RIGHT SECTION SHALL BE WHITE WITH BLACK LEGEND.
6. PAINT SHALL BE BENJAMIN MOORE NO. 120-60 POLY-SILICONE ENAMEL OR APPROVED
7. ALL LETTERING SHALL BE 1 1/4" EXCEPT FOR THE WORDS "US Army Corps of Engineers" AND THE PROJECT TITLE. THE WORDS "US Army Corps of Engineers" SHALL BE 1 1/2" TALL. THE PROJECT TITLE LETTERING SHALL BE A MINIMUM OF 1 1/2" TALL AND A MAXIMUM OF 3 1/2" TALL. THE LETTERING SIZE SHALL BE CHOSEN SUCH THAT LARGEST POSSIBLE LETTERS ARE USED WITHOUT EXCEEDING A MAXIMUM LINE LENGTH OF 42". THE NUMBER OF LINES IN THE PROJECT TITLE SHALL MATCH THAT SHOWN ON THE COVER SHEET OF THE SPECIFICATIONS.

SCALE: NONE JUNE 1998

U.S. ARMY ENGINEER DISTRICT, MEMPHIS
CORPS OF ENGINEERS
MEMPHIS, TENNESSEE

TEMPORARY PROJECT SIGN

DIVISION 2 - SITEWORK

SECTION 02210

CLEARING AND GRUBBING

TABLE OF CONTENTS

PART 1 GENERAL 1
1.1 DEFINITIONS 1
1.1.1 Clearing 1
1.1.2 Grubbing 1
1.2 SUBMITTALS 1

PART 2 PRODUCTS (NOT APPLICABLE) 2

PART 3 EXECUTION 2
3.1 CLEARING 2
3.2 GRUBBING 2
3.3 DISPOSAL OF MATERIALS 2
3.3.1 General 2
3.3.2 Burning 2
3.3.3 Burying 2
3.3.4 Removal from Site 3

SECTION 02210

CLEARING AND GRUBBING

PART 1 GENERAL

1.1 DEFINITIONS

1.1.1 Clearing

Clearing shall consist of the felling, trimming, and cutting of trees into sections and the satisfactory disposal of the trees and other vegetation designated for removal, including down timber, snags, brush, and rubbish occurring in the areas to be cleared. Rubbish may consist of discarded building materials and/or appliances. All rubbish shall be taken to a dump capable of handling such material. Clearing shall be limited to that necessary for the construction of this job.

1.1.2 Grubbing

Grubbing shall consist of the removal and disposal of stumps, roots larger than 75 mm (3 inches) in diameter, and matted roots from the designated grubbing areas.

1.2 SUBMITTALS

Government approval is required for submittals with a "GA" designation; submittals having an "FIO" designation are for information only. The following shall be submitted in accordance with Section 01330 SUBMITTAL PROCEDURES:

SD-01 Data

Weight Certificates; FIO.

SD-18 Records

Materials Other Than Salable Timber; FIO.

A signed copy of the agreement to dispose of such products on private property shall be filed with the Contracting Officer.

PART 2 PRODUCTS (NOT APPLICABLE)

PART 3 EXECUTION

3.1 CLEARING

Clearing shall be limited to that necessary for construction. Trees, stumps, roots, brush, and other vegetation in areas to be cleared shall be cut off flush with or below the original ground surface, except such trees and vegetation as may be indicated or directed to be left standing. Trees and vegetation to be left standing shall be protected from damage incident to clearing, grubbing, and construction operations by the erection of barriers or by such other means as the circumstances require. Clearing shall also include the removal and disposal of structures that obtrude, encroach upon, or otherwise obstruct the work.

3.2 GRUBBING

Material to be grubbed, together with logs and other organic, concrete, masonry, or metallic debris not suitable for foundation purposes, shall be removed to a depth of not less than 18 inches below the original surface level of the ground in areas indicated to be grubbed and in areas indicated as construction areas under this contract. Depressions made by grubbing shall be filled with suitable material and compacted to make the surface conform with the original adjacent surface of the ground.

3.3 DISPOSAL OF MATERIALS

3.3.1 General

All debris resulting from clearing operations on this contract shall, at the Contractor's option, be disposed of by burying, burning, or removal from the site. The Contractor shall make a reasonable effort to utilize this last method to channel materials of value resulting from clearing and grubbing operations into beneficial use.

3.3.2 Burning

The Contractor shall comply with the applicable pollution restrictions of the state of Arkansas. Subject to such restrictions and obtaining any permit which may be required by said state, the Contractor may burn material within the contract area, and at any time within the contract period, provided such burning does not cause the above standards to be exceeded. The material shall be piled for burning at locations and in such manner that it will not float into ditches or off the right-of-way. Burning operations shall be conducted so as to prevent damage to standing timber or other flammable growth. The Contractor will be responsible for any damage to life and/or property resulting from fires that are started by his employees or as a result of his operations. The Contractor shall furnish at the site of burning operations adequate fire fighting equipment to properly equip his personnel for fighting fires. Fires shall be guarded at all times and shall be under constant surveillance until they have been extinguished.

3.3.3 Burying

If the Contractor elects to bury the debris, it shall be placed in the northern or southern excess excavated material disposal areas indicated on the drawings. All material disposed of by burying shall be covered with a minimum of 24 inches of earth material. Debris placed for burying shall be placed in such manner that it will not float into the channel or off the right-of-way prior to being covered with earth materials.

3.3.4 Removal from Site

The Contractor may elect to remove all debris resulting from clearing and grubbing operations from the site of the work. Such disposal shall comply with all applicable Federal, State and local laws. The Contractor may, at his option retain for his own use or disposal by sale or otherwise any such materials of value. The Government assumes no responsibility for the protection or safekeeping of any materials retained by the Contractor. Such materials shall be removed from the site of the work before the date of completion of the work under this contract. The locations and manner of placement of clearing and grubbing debris on the right-of-way by the Contractor for his convenience prior to removal of the debris from the site of the work shall be subject to the approval of the Contracting Officer. When debris from clearing operations is placed on adjacent property, the Contractor shall obtain, without cost to the Government, additional rights-of-way for such purpose. Such material shall be placed so as not to interfere with roads, drainage, or other improvements.

--End of Section--

DIVISION 2 - SITEWORK

SECTION 02215

GEOTEXTILES

TABLE OF CONTENTS

PART 1 GENERAL 1
1.1 REFERENCES 1
1.2 SUBMITTALS 2
1.3 SHIPMENT, HANDLING, AND STORAGE 3

PART 2 PRODUCTS 3
2.1 MATERIALS 3
2.1.1 Geotextile 3
2.1.1.1 General 3
2.1.1.2 Geotextile Fiber 3
2.1.2 Manufactured Seams 3
2.1.3 Securing Pins 3
2.2 INSPECTIONS, VERIFICATIONS, AND TESTING 4
2.2.1 Manufacturing and Sampling 4
2.2.2 Site Verification and Testing 4

PART 3 EXECUTION 4
3.1 SURFACE PREPARATION 4
3.2 INSTALLATION OF THE GEOTEXTILE 4
3.2.1 General 4
3.2.2 Placement 4
3.3 PROTECTION 5
3.4 PLACEMENT OF MATERIALS 5
3.5 OVERLAPPING AND SEAMING 5
3.5.1 Overlapping 5
3.5.2 Field Seams 5
3.5.2.1 Overlapped Seams 5
3.5.2.2 Sewn Seams 5

SECTION 02215

GEOTEXTILES

PART 1 GENERAL

1.1 REFERENCES

The publications listed below form a part of this specification to the extent referenced. The publications are referred to in the text by basic designation only.

AMERICAN SOCIETY FOR TESTING AND MATERIALS (ASTM)

ASTM D 123	(1995a) Standard Terminology Relating to Textiles
ASTM D 1683	(1990a) Failure in Sewn Seams of Woven Fabrics
ASTM D 3786	(1987) Hydraulic Bursting Strength of Knitted Goods and Nonwoven Fabrics - Diaphragm Bursting Strength Tester Method
ASTM D 3884	(1992) Abrasion Resistance of Textile Fabrics (Rotary Platform, Double-Head Method)
ASTM D 4355	(1992) Deterioration of Geotextiles from Exposure to Ultraviolet light and Water (Xenon-Arc Type Apparatus)
ASTM D 4491	(1992) Water Permeability of Geotextiles By Permittivity
ASTM D 4533	(1991) Trapezoid Tearing Strength of Geotextile
ASTM D 4632	(1991) Grab Breaking Load and Elongation of Geotextiles
ASTM D 4751	(1993) Determining the Apparent Opening Size of a Geotextile
ASTM D 4833	(1988) Index Puncture Resistance of Geotextiles, Geomembranes, and Related Products

ASTM D 4873	(1988) Guide for Identification, Storage, and Handling of Geotextiles

AMERICAN ASSOCIATION OF STATE HIGHWAY AND TRANSPORTATION OFFICIALS

AASHTO M288	American Association of State Highway and Transportation Officials

1.2 SUBMITTALS

Government approval is required for all manufactured submittals with a "GA" designation; submittals having an "FIO" designation are for information only. The following shall be submitted in accordance with Section 01330 SUBMITTAL PROCEDURES:

SD-13 Certificates

Geotextile; FIO.

All brands of geotextile and all manufactured seams to be used shall be accepted on the basis of mill certificates or affidavits. The Contractor shall furnish the Contracting Officer, in duplicate, a mill certificate or affidavit signed by a legally authorized official from the company manufacturing the geotextile. The mill certificate or affidavit shall attest that the geotextile meets the chemical, physical and manufacturing requirements stated in this specification.

SD-14 Samples

Geotextile; GA.

If requested by the Contracting Officer, the Contractor shall provide to the Government geotextile samples for testing to determine compliance with any or all of the requirements in this specification. When samples are to be provided, they shall be submitted a minimum of 60 days prior to the beginning of installation of the same textile. A written certificate of compliance signed by a legally authorized official from the company shall be submitted, in duplicate, upon delivery of the geotextile. The certificate shall state that the geotextile shipped to the site meets the chemical requirements and exceeds the minimum average roll value in accordance to AASHTO M288, Table 1, Geotextile Fabric, Type A for Erosion Control. Upon request, the Contractor shall supply quality control tests for the geotextile. All samples provided shall be from the same production lot as will be supplied for the contract, and shall be the full manufactured width of the geotextile by at least 10 feet long, except that samples for seam strength may be a full width sample folded over and the edges stitched for a length of at least 5 feet. Samples submitted for testing shall be identified by manufacturers lot designation. For needle punched geotextile, the manufacturer shall certify that the geotextile has been inspected using permanent on-line metal detectors and does not contain any needles.

1.3 SHIPMENT, HANDLING, AND STORAGE

Only approved geotextile rolls shall be delivered to the project site. All geotextile shall be labeled, shipped, stored, and handled in accordance with ASTM D 4873. No hooks, tongs, or other sharp instruments shall be used for handling geotextile.

PART 2 PRODUCTS

2.1 MATERIALS

2.1.1 Geotextile

2.1.1.1 General

The geotextile (referred to as "Filter Fabric" on the drawings) shall be a non-woven pervious sheet of plastic yarn as defined by ASTM D 123. The geotextile shall equal or exceed the minimum average roll values in accordance to AASHTO M288, Table 1, Geotextile Fabric, Class A for Erosion Control. Strength values indicated in the table are for the weaker principal direction.

2.1.1.2 Geotextile Fiber

Fibers used in the manufacturing of the geotextile shall consist of a long-chain synthetic polymer composed of at least 85 percent by weight of polyolefins, polyesters, or polamides. Stabilizers and/or inhibitors shall be added to the base polymer if necessary to make the filaments resistant to deterioration caused by ultraviolet light and heat exposure. Reclaimed or recycled fibers or polymer shall not be added to the formulation. Geotextile shall be formed into a network such that the filaments or yarns retain dimensional stability relative to each other, including the edges. The edges of the geotextile shall be finished to prevent the outer fiber from pulling away from the geotextile. Geotextiles shall be the maximum standard width as supplied by the manufacturer.

2.1.2 Manufactured Seams

The manufactured seams of the geotextile shall be sewn with thread of a material meeting the chemical requirements given above for geotextile yarn or shall be bonded by cementing or by heat. Seams shall be tested in accordance with method ASTM D 1683. The strength of the seam shall be not less than 90 percent of the required grab tensile strength of the unaged geotextile in any principal direction.

2.1.3 Securing Pins

The geotextile shall be secured by pin to prevent movement prior to placement of filter materials. Other appropriate means to prevent movement such as staples, sand bags, and stone could also be used. Securing pins shall be inserted through both strips of overlapped geotextile along the

line passing through midpoints of the overlap. Securing pins shall be removed as placements of filter materials are placed to prevent tearing of geotextile or enlarging holes. The maximum pins spacing shall be equal to 24 inches. When windy conditions prevail at the construction site, the number of pins should be increased to ensure secure installation upon the demand of the Contracting Officer. Terminal ends of the geotextile shall be anchored.

2.2 INSPECTIONS, VERIFICATIONS, AND TESTING

2.2.1 Manufacturing and Sampling

Geotextiles and factory seams shall meet the requirements specified in accordance to AASHTO M288, Table 1, Geotextile Fabric, Class A for Erosion Control. Conformance testing shall be performed in accordance with the manufacturers approved quality control manual.

2.2.2 Site Verification and Testing

The Government maintains the right to request and test samples. Samples may be tested to verify that the geotextile meets the requirements specified in accordance to AASHTO M288, Table 1, Geotextile Fabric, Class A for Erosion Control. Samples shall be identified by manufacturer's name, type of geotextile, lot number, roll number and machine direction. Test results from the lot under review shall be approved prior to deployment of that lot of geotextile. Rolls which are sampled shall be immediately rewrapped in their protective covering.

PART 3 EXECUTION

3.1 SURFACE PREPARATION

Surface on which the geotextile will be placed shall be prepared, to a relatively smooth surface condition, in accordance with the applicable portion of this specification and shall be free from obstruction, debris, depressions, erosion feature, or vegetation. Any irregularities shall be removed so as to insure continuous, intimate contact of the geotextile with the surface. Any loose material, soft or low-density pockets of material shall be removed; erosion features such as rills, gullies etc. must be graded out of the surface before geotextile placement.

3.2 INSTALLATION OF THE GEOTEXTILE

3.2.1 General

The geotextile shall be placed in accordance with the manufacturer's recommendations and at the locations shown on the contract drawings. At the time of installation, the geotextile shall be rejected if it has defects, rips, holes, flaws, deterioration or damage incurred during manufacture, transportation or storage.

3.2.2 Placement

The geotextile shall be placed with the long dimension perpendicular to the centerline of the

channel and laid smooth and free of tension, stress, folds, wrinkles, or creases. Temporary pinning of the geotextile to help hold it in place until the bedding material is placed shall be allowed. The temporary pins shall be removed as the bedding material is placed to relieve high tensile stress that may occur during placement of material on the geotextile. Trimming shall be performed in such a manner that the geotextile shall not be damaged in any way.

3.3 PROTECTION

The geotextile shall be protected at all times during construction from contamination by surface runoff and any geotextile so contaminated shall be removed and replaced with uncontaminated geotextile. Any damage to the geotextile during its installation or during placement of filter materials, bedding materials or riprap protection shall be replaced by the Contractor at no cost to the Government. The work shall be scheduled so that the covering of the geotextile with a layer of the specified material is accomplished within the same day after placement of the geotextile. Failure to comply shall require replacement of geotextile. The geotextile shall be protected from damage prior to and during the placement of materials. Before placement of materials, the Contractor shall demonstrate that the placement technique will not cause damage to the geotextile. In no case shall any type of equipment be allowed on the unprotected geotextile.

3.4 PLACEMENT OF MATERIALS

Placing of bedding material, and riprap protection shall be performed in a manner to insure intimate contact of the geotextile with the prepared surface. The placement shall also be performed in a manner that shall not damage the geotextile including tear, puncture, or abrasion. Any geotextile damaged beneath the materials shall be uncovered as necessary and replaced at no cost to the Government.

3.5 OVERLAPPING AND SEAMING

3.5.1 Overlapping

The overlap of geotextile rolls shall be as recommended by the manufacturer but by no means shall be less than 12 inches. Appropriate measures will be taken to insure required overlap exists after cushion placement.

3.5.2 Field Seams

3.5.2.1 Overlapped Seams

Field seams shall be overlapped seams with overlap as required by manufacturer's recommendations and shall be no less than 24 inches. Pins shall be of the adequate size and shape to maintain the seams until subsequent filter material operations are performed. If seam integrity cannot be maintained, the Government may require some sewn field seams.

3.5.2.2 Sewn Seams

High strength thread should be used such that seam test should conform to ASTM D 1683. The thread shall meet the chemical, ultraviolet, and physical requirements of the geotextile, and the color shall be different from that of the geotextile. The seam strength shall be equal to the strength required for the fabric in the direction across the seam. Overlapping J-type seams are preferable over prayer-type seams as the overlapping fabric reduces the chance of openings to occur at the seam. Double sewing shall be used specially for field seams to provide a safety factor against undetected missed stitches.

Table No. 1 - Physical Requirements

Physical Property	Test Procedure	Applicable Values++
Geotextile Permeability	ASTM D 4491 Test Methods For Water Permeability of Geotextiles by	The permeability of the Geotextile shall be greater than 0.49 Feet Per Minute Permittivity
Tear Strength	ASTM D 4533 Trapezoidal Tear Strength	30 pounds minimum in any principal direction
Tensile Strength +(unaged geotextile)	ASTM D 4632 Determine breaking load as specified in the ASTM	200 pound minimum in any principal direction
Breaking Elongation +(unaged geotextile)	ASTM D 4632 Determine Apparent Elongation Breaking	15 percent minimum in any principal direction
Equivalent Opening Size (EOS)	ASTM D 4751 Determine Apparent Opening Size-AOS (EOS)	No finer than the U.S. Standard Sieve No. 100 and no coarser than the U.S. Standard Sieve No. 70
Puncture Strength +(unaged geotextile)	ASTM D 4833 Determine puncture resistance as specified in the ASTM	80 pound minimum

Abrasion Resistance	ASTM D 4886 Determine breaking load after abrasion test as specified in ASTM	55 pound minimum Residual Breaking Load in any principal direction
(N/A)	(N/A)	(N/A)
Percent Open Area (POA)	Specification Paragraph titled, "Determination of Percent Open Area."	The percent of open area shall not be less than ( ) percent

+Unaged geotextile is defined as geotextile in the condition received from the manufacturer or distributor.

++All numerical values represent minimum average roll values (i.e., any roll in a lot should meet or exceed the minimum in the table).

--End of Section--

DIVISION 2 - SITEWORK

SECTION 02216

STONE PROTECTION

TABLE OF CONTENTS

PART 1 GENERAL 1
1.1 SCOPE 1
1.2 QUALITY CONTROL 1
1.3 REFERENCES 1
1.4 SUBMITTALS 2

PART 2 PRODUCTS 2
2.1 MATERIALS 2
2.1.1 General 2
2.1.2 Sources and Evaluation Testing 2
2.1.3 Filter Material 3
2.1.4 Riprap 3
2.1.5 Test Method 4
2.1.6 Gradation Test 4

PART 3 EXECUTION 4
3.1 FOUNDATION PREPARATION 4
3.2 MATERIAL LAYER 4
3.3 RIPRAP 5
3.3.1 General 5
3.3.2 Placement 5

SECTION 02216

STONE PROTECTION

PART 1 GENERAL

1.1 SCOPE

The work covered by this section consists of furnishing all plant, labor, equipment, and materials, and performing all operations in connection with the construction of stone protection as shown on the drawings or as directed by the Contracting Officer in accordance with these specifications and applicable drawings. At the flared end section at the influent end of the 48-inch I.D. RCP culvert, stone protection consists of filter material covered by 30-inches of R-200 riprap material, which makes up the inverted filter. The slopes shall have 18-inches of R-90 riprap. At the outfall control structure of the 48-inch RCP culvert, stone protection consists of filter material covered by 24-inches of R-200 riprap material, with 18-inches of R-90 riprap material on the outlet channel slopes.

1.2 QUALITY CONTROL

The Contractor shall establish and maintain quality control for all stone protection testing and operations to assure compliance with contract requirements, and shall maintain records of the quality control for all construction including, but not limited to, the following:

1. Foundation preparation (line and grade).

2. Inspection at the work site to ensure use of specified materials.

3. Riprap gradation and placement.

A copy of these records of inspections and tests as well as the records of corrective action taken, shall be furnished to the Government.

1.3 REFERENCES

The following publication of the issue listed below, but referred to thereafter by basic designation only, forms a part of this specification to the extent indicated by the reference thereto:

US ARMY CORPS OF ENGINEERS, (COE)
HANDBOOK FOR CONCRETE AND CEMENT (CRD)

CRD-C 106-93	Unit Weight and Voids in Aggregate
CRD-C 107-94	Specific Gravity and Absorption of Coarse Aggregate

1.4 SUBMITTALS

Government approval is required for submittals with a "GA" designation; submittals having an "FIO" designation are for information only. The following shall be submitted in accordance with Section 01330 SUBMITTAL PROCEDURES:

SD-01 Data

Equipment; FIO.

List of proposed equipment to be used in performance of construction work including descriptive data.

SD-09 Reports

Sampling and Testing; FIO. Density Test; FIO.

Calibration curves and related test results prior to using the device or equipment being calibrated. Copies of field-test results within 24 hours after the tests are performed. Test results from samples, not less than 30 days before material is required for the work. Results of laboratory tests for quality control purposes, for approval, prior to using the material.

PART 2 PRODUCTS

2.1 MATERIALS

2.1.1 General

All stone shall be durable material as approved by the Contractor Officer. The sources from which the Contractor proposed to obtain the material shall be selected well in advance of the time when the material will be required. Stone for riprap shall be of a suitable quality to ensure permanence in the structure and in the climate in which it is to be used. It shall be free from cracks, seams and other defects that would tend unduly to increase its deterioration from natural causes. The inclusion of objectionable quantities of dirt, sand, clay and rock fines will not be permitted.

2.1.2 Sources and Evaluation Testing

Riprap shall be obtained in accordance with the provisions of SPECIAL CONTRACT REQUIREMENT paragraph entitled STONE SOURCES. If the Contractor proposed to furnish riprap from a source not currently listed, the Contractor shall make such investigations as necessary to determine whether acceptable stone can be produced from the proposed source. The Contractor shall submit suitable test reports and service records to show the acceptability of the stone. Satisfactory service records on work outside the Corps of Engineers will be

acceptable. If no such records are available, the Contractor shall make tests to assure the acceptability of the stone. The tests to which the stone may be subjected will include petrographic analysis, specific gravity, abrasion, absorption, wetting and drying, freezing and thawing and such other tests as may be considered necessary by the Contracting Officer. The following guidance is provided for use by the Contractor in analyzing a new source of stone. Stone that weighs less than 155 lbs/c.f. and has more than 2% absorption will not be acceptable unless other tests and services records show that the stone is satisfactory. The method of tests for unit weight will be CRD-C 106, "Standard Test Method for Unit Weight and Voids in Aggregate". The method of tests for absorption will be CRD-C 107, entitled "Standard Test Method for Specific Gravity and Absorption of Coarse Aggregate". Samples shall be taken by the Contractor under the supervision of the Contracting Officer at least 60 days in advance of the time the placing of the stone is expected to begin. The tests will be conducted in accordance with applicable Corps of Engineers methods of tests given in the Handbook for Concrete and Cement, and will be performed at an approved testing laboratory. The cost of testing will be borne by the Contractor.

2.1.3 Filter Material

Filter material shall consist of sand, gravel, or crushed stone, well graded between the prescribed limits as specified below. The material shall be composed of tough, durable particles, shall be reasonably free from thin, flat and elongated pieces, and shall contain no organic matter or soft, friable particles in quantities considered objectionable by the Contracting Officer.

Sieve Size	Percent by Weight Passing
3 inches	100
1 ½ inches	85-100
¾ inch	35-70
3/8 inch	5-40
No. 4	0-10

2.1.4 Riprap

Stone for riprap shall be durable and of a suitable quality to insure permanence in the structure and in the climate in which its is to be used. It shall be free from cracks, seams, and other defects that would tend to increase unduly its deterioration from natural causes. The inclusion of objectionable quantities of dirt, sand, clay, and rock fines will not be permitted. The riprap gradation shall conform to the following tables using the plates I through IX of Paragraph 2.1.5.

R-90 Riprap Stone

Percent Lighter, by Weight	Limits of Stone Weight, 1bs
100	90-40
50	40- 20
15	20-5

R-200 Riprap Stone

Percent Lighter, by Weight	Limits of Stone Weight, 1bs
100	200-80
50	80-40
15	40-10

Neither the breadth nor the thicknesses of any piece of riprap shall be less than 1/3 the length.

2.1.5 Test Method

Gradation test method shall conform to the requirements of "LMVD Standard Test Method for Gradation of Riprap" which is inserted at the end of this section as PLATE I through I.X.

2.1.6 Gradation Test

The Contractor shall perform a gradation test or tests on the riprap at the quarry. The sample shall be taken by the Contractor under the supervision of the Contracting Officer, shall consist of not less than 15 tons of riprap and shall be collected in a random manner that will provide a sample which accurately reflects the actual gradation arriving at the jobsite. If collected by the truckload, each truckload shall be representative of the gradation requirements. The Contractor shall provide all necessary screens, scales and other equipment, and the operating personnel therefor, and shall grade the samples, provide gradation test sample, data, and plot sheets/forms, all at no additional cost to the Government

PART 3 EXECUTION

3.1 FOUNDATION PREPARATION

Areas on which filter layers are to be placed shall be trimmed and dressed to conform to cross sections shown on the drawings within an allowable tolerance of plus or minus 50 mm (2 inches) from the theoretical slope lines and grades. Where such areas are below the allowable minus tolerance limit they shall be brought to grade by filling with filter material and no additional payment will be made for any material thus required. Immediately prior to placing the gravel bedding the prepared base will be inspected by the Contracting Officer and no material shall be placed thereon until that area has been approved.

3.2 FILTER MATERIAL LAYER

Filter material layers composed of a 6 inch thickness shall be placed on prepared earth subgrade, within the limits shown on the drawings or as staked in the field, to form a backing for the riprap protection. Filter material shall be spread uniformly on the prepared base, in a satisfactory manner, to the slope lines and grades indicated on the drawings or as directed. Placing of material by methods that will tend to segregate particle sizes within the bedding shall be repaired before proceeding with the work. Compaction of the filter bedding layers will not be required

but it shall be finished to present a reasonably even surface free from mounds or windows.

3.3 RIPRAP

3.3.1 General

At the flared end section at the influent end of the 48-inch I.D. RCP culvert, stone protection consists of filter material covered by 30 inches of R-200 riprap material. At the outfall control structure of the 48-inch RCP culvert, stone protection consists of filter material covered by 24 inches of R-200 riprap material, within the limits shown on the drawings or otherwise required by the Contracting Officer. The slopes are protected by R-90 riprap. Either boulders or quarried rock may be used for riprap if conforming to the applicable requirements of paragraph Quality Control.

3.3.2 Placement

Stone for "riprap" shall be placed on the filter bedding layers in such manner as to produce a reasonably well-graded mass of rock with the minimum practicable percentage of voids, and shall be constructed within the specified tolerance to the lines and grades shown on the drawings or staked in the field. A tolerance of plus 6 inches or minus 4 inches from the slope lines and grades shown on the drawings will be allowed in the finished surface of the riprap, except that either extreme of such tolerance shall not be continuous over an area greater than 200 square feet. Riprap shall be placed to its full course thickness at one operation and in such a manner as to avoid displacing the geotextile. The larger stones shall be well distributed and the entire mass of stones in their final position shall be roughly graded to conform to the gradation specified in paragraph 2.1.4 above. The finished riprap shall be free from objectionable pockets of small stones and clusters of larger stones. Placing riprap in layers will not be permitted. Placing riprap by dumping into chutes or by similar methods likely to cause segregation of the various sizes will not be permitted. The desired distribution of the various sizes of stones throughout the mass shall be obtained by selective loading of the material at the quarry or other source; by controlled dumping of successive loads during final placing, or by other methods of placement which will produce the specified results. Rearranging of individual stones by mechanical equipment or by hand will be required to the extent necessary to obtain a reasonably well graded distribution of stone sizes as specified above. The Contractor shall maintain the riprap protection until accepted and any material displaced by any cause shall be replaced at his expense to the lines and grades shown on the drawings.

--End of Section--

LMVD STANDARD TEST METHOD FOR GRADATION

December 14, 1998

A. Select a representative sample (Note #1), weigh and dump on hard stand.

B. Select four specific size stones to use as reference stones (a1, b1, c1, and d1) while performing the "individual weight larger than" test (see example & Note #2). Selected stone sizes should represent an evenly distributed cross section of the various size stones contained within the sample. Reference stone “a1” is typically the largest stone in the sample. Procedure is similar to the standard aggregate gradation test for "individual weight retained".

C. Determine the largest size stone in the sample. (100% size)

D. Separate the sample into piles starting with the stones that are larger than reference stone “b1” and proceeding to the smallest stones. The first pile should contain all stones larger than reference stone “b1” and smaller than “a1”, the largest stone. Pile two should contain all stones larger than “c1” and smaller than “b1”. Pile 3 should contain all stones larger than “d1” and smaller than “c1”. The remaining pile should contain all stones smaller than “d1”. Use reference stones for visual comparison in separating the obviously "larger than" stones. Stones that appear close to a specific size reference stone must be individually weighed. If a stone is heavier than the specific size reference stone, it should be place in the pile containing the stones larger than the reference stone. Weigh each pile as a whole or cumulatively adding each stone in the individual piles.

E. Paragraph D above will result in "individual weight retained" figures. Calculate individual percent retained (heavier than) and cumulative percent retained and cumulative percent passing (lighter than). Record test results on the “Gradation Test Data Sheet” (plate V) as shown on example plate III. Plot percent finer by weight, along with the specification curves on ENG Form 4055.

F. See plate V and plate VI for a blank “Gradation Test Data Sheet” and a blank ENG Form 4055. Plates VII, VIII, and IX have been provided for the convenience of the contractor and can be used as necessary. These three plates have the upper and lower specification limits for “R-90”, “R-200”, and “R-650” pre-plotted on ENG Form 4055.

NOTES

1. Sample Selection. The most important part of the test and the least precise is the selection of a representative sample. No "standard" can be devised; larger quarry run stone is best sampled at the shot or muck pile by given direction to the loader; small graded riprap is best sampled by random selection from the transporting vehicles. If possible, all parties should take part in the sample selection and agree before the sample is run that the sample is representative.

2. Selection of Size for Separation. It is quite possible and accurate to run a gradation using any convenient sizes for the separation, without reference to the specifications. However, it is usually more convenient to select weights from the gradation limits, such as the 90 lbs., 40 lbs., 20 lbs., and 5 lbs. as shown in the following “R-90”example. After the test is plotted on ENG 4055 and a curve drawn, the gradation limits from the specifications shall be plotted.

(EXAMPLE)

Table From Specifications

TABLE I
(For Riprap “R 90”)

Percent Lighter by Weight (SSD)	Limits of Stone Weight, lb.
100	90-40
50	40-20
15	20-5

(EXAMPLE)

G R A D A T I O N T E S T D A T A S H E E T

Quarry AAA Quarry Inc. . Stone Tested R-90 .

Date of Test 24 May 79 . Testing Rate _____

T E S T R E P R E S E N T S

Contract No.	District	Tons
DACW66-79-C-0005	Memphis	16
	TOTAL	16

G R A D A T I O N

Stone Size (lbs.)	Individual Weight Retained	Individual % Retained	Cumulative %Coarser	Cumulative %Finer	Specification % Finer by wt
90 **"a1"**	0	0	0	100	100
40 **"b1"**	9600	30	30	70	100-50
20 **"c1"**	11200	35	65	35	50-15
5 **"d1"**	8000	25	90	10	<15
< 5 **"d1"**	3200	10	100	-	
Total Weight	32000lbs				

Remarks: LARGEST STONE SIZE = 78 LBS .

I Certify that the above stone sample is representative of the total tonnage covered by this test report.

Contractor Representative: Representative's Name and Signature .

Government Representative: Representative's Name and Signature .

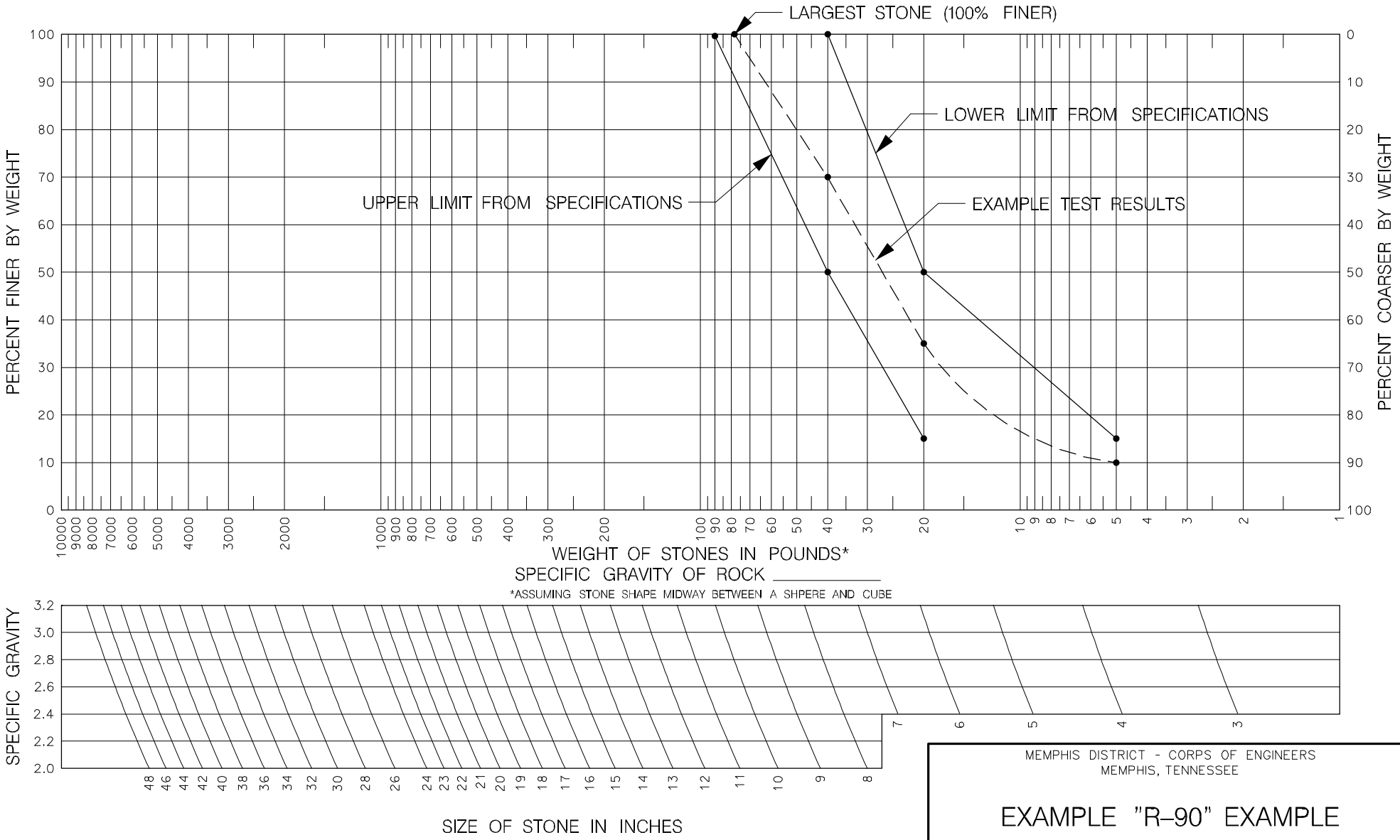

MEMPHIS DISTRICT - CORPS OF ENGINEERS
MEMPHIS, TENNESSEE

EXAMPLE "R-90" EXAMPLE

DACW66-79-C-0005
PROJECT: NEW FRANKLIN DITCH DATE: 24 MAY 79

RIPRAP GRADATION CURVES

PLATE IV

ENG FORM 4055
APR 67

G R A D A T I O N T E S T D A T A S H E E T

Quarry _____ Stone Tested _____

Date of Test _____ Testing Rate _____

T E S T R E P R E S E N T S

Contract No.	District	Tons
	TOTAL	

G R A D A T I O N

Stone Size (lbs)	Individual Weight Retained	Individual % Retained	Cumulative %Coarser	Cumulative %Finer	Specification % Finer by wt
Total Weight					

Remarks:_____

I Certify that the above stone sample is representative of the total tonnage covered by this test report.

Contractor Representative _____

Government Representative _____

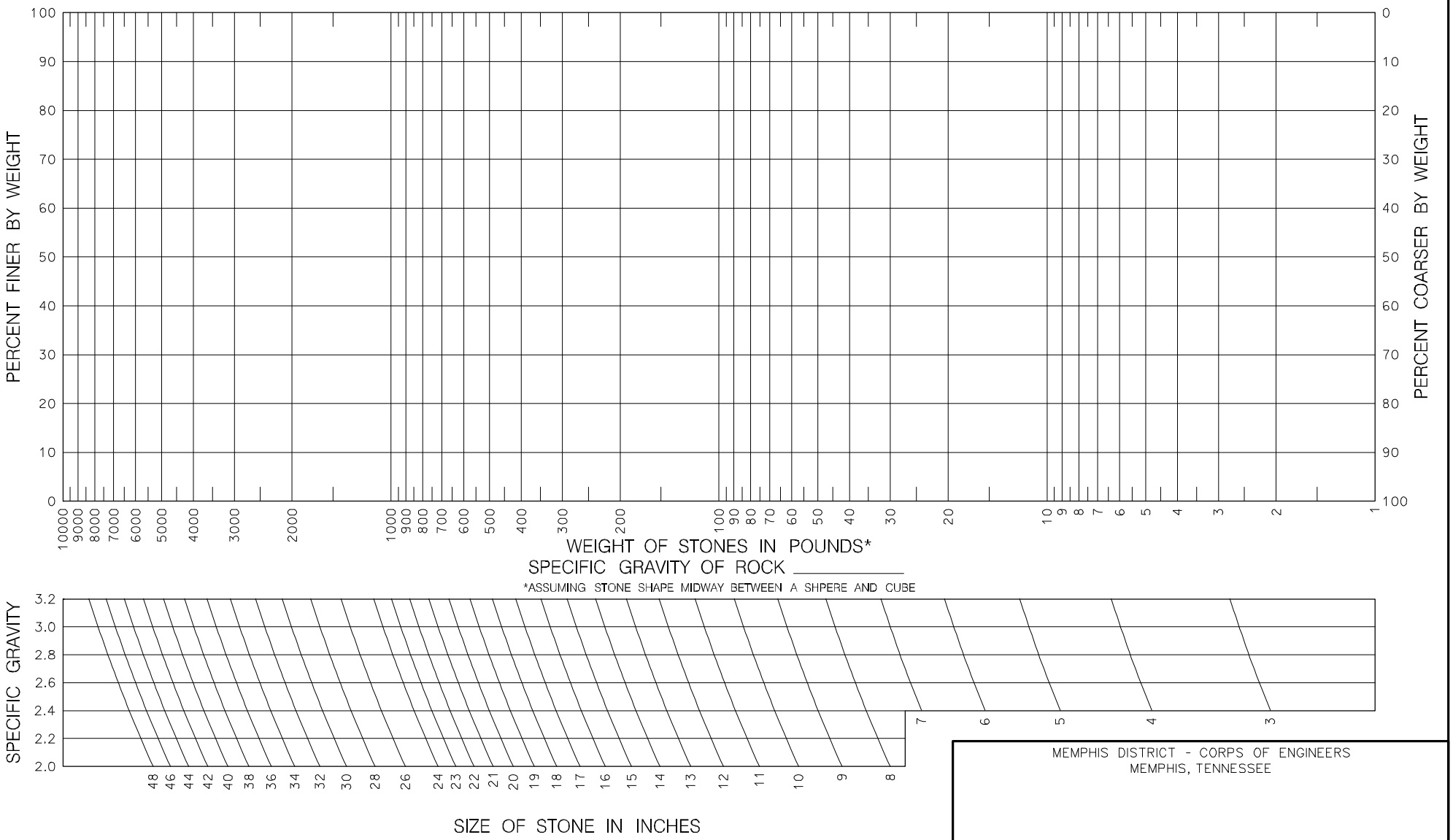

MEMPHIS DISTRICT - CORPS OF ENGINEERS
MEMPHIS, TENNESSEE

PROJECT: _____ DATE: _____

RIPRAP GRADATION CURVES

PLATE VI

ENG FORM 4055
APR 67

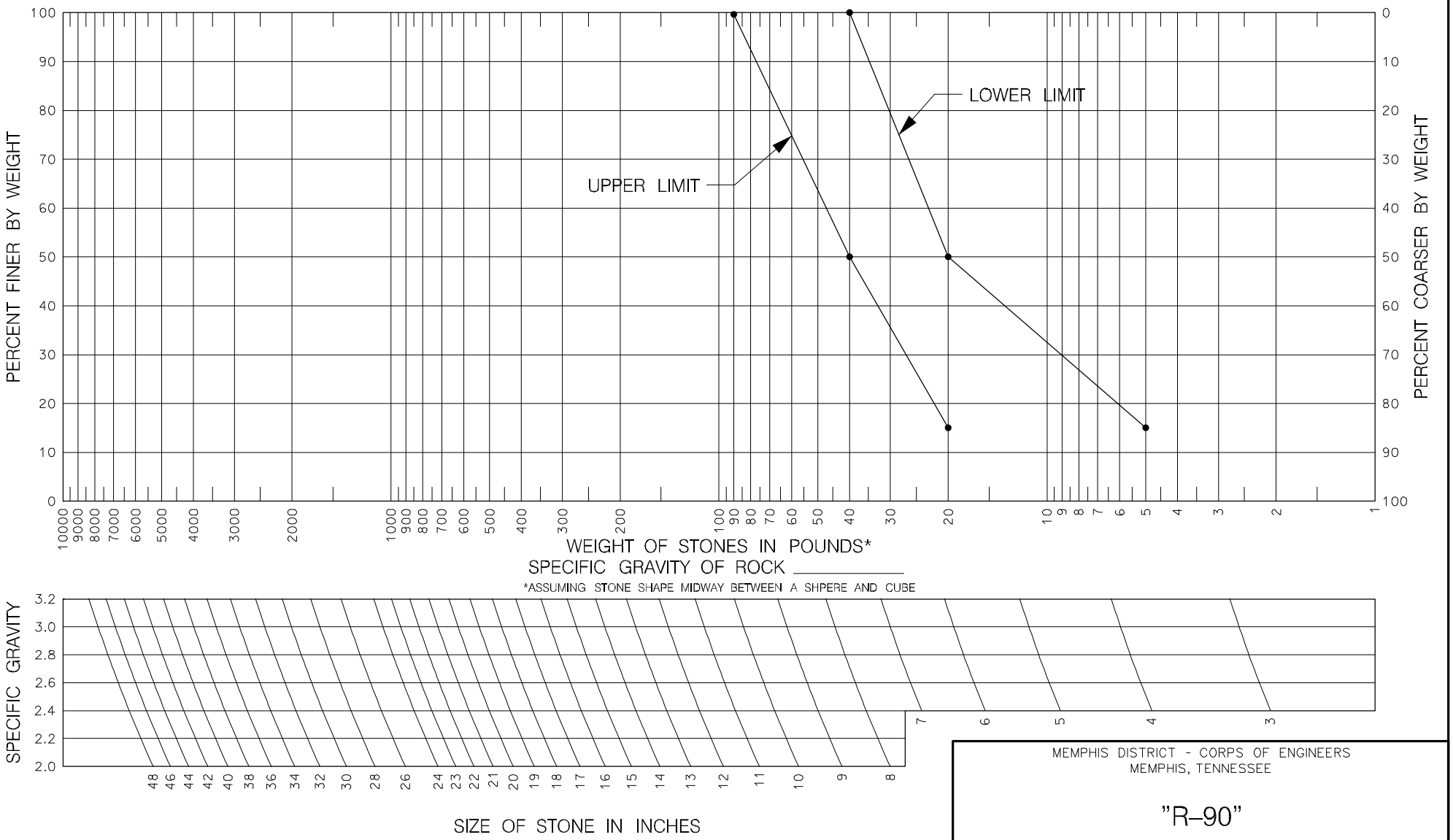

MEMPHIS DISTRICT - CORPS OF ENGINEERS
MEMPHIS, TENNESSEE

"R–90"

PROJECT: _____ DATE: _____

RIPRAP GRADATION CURVES

PLATE VII

ENG FORM 4055
APR 67

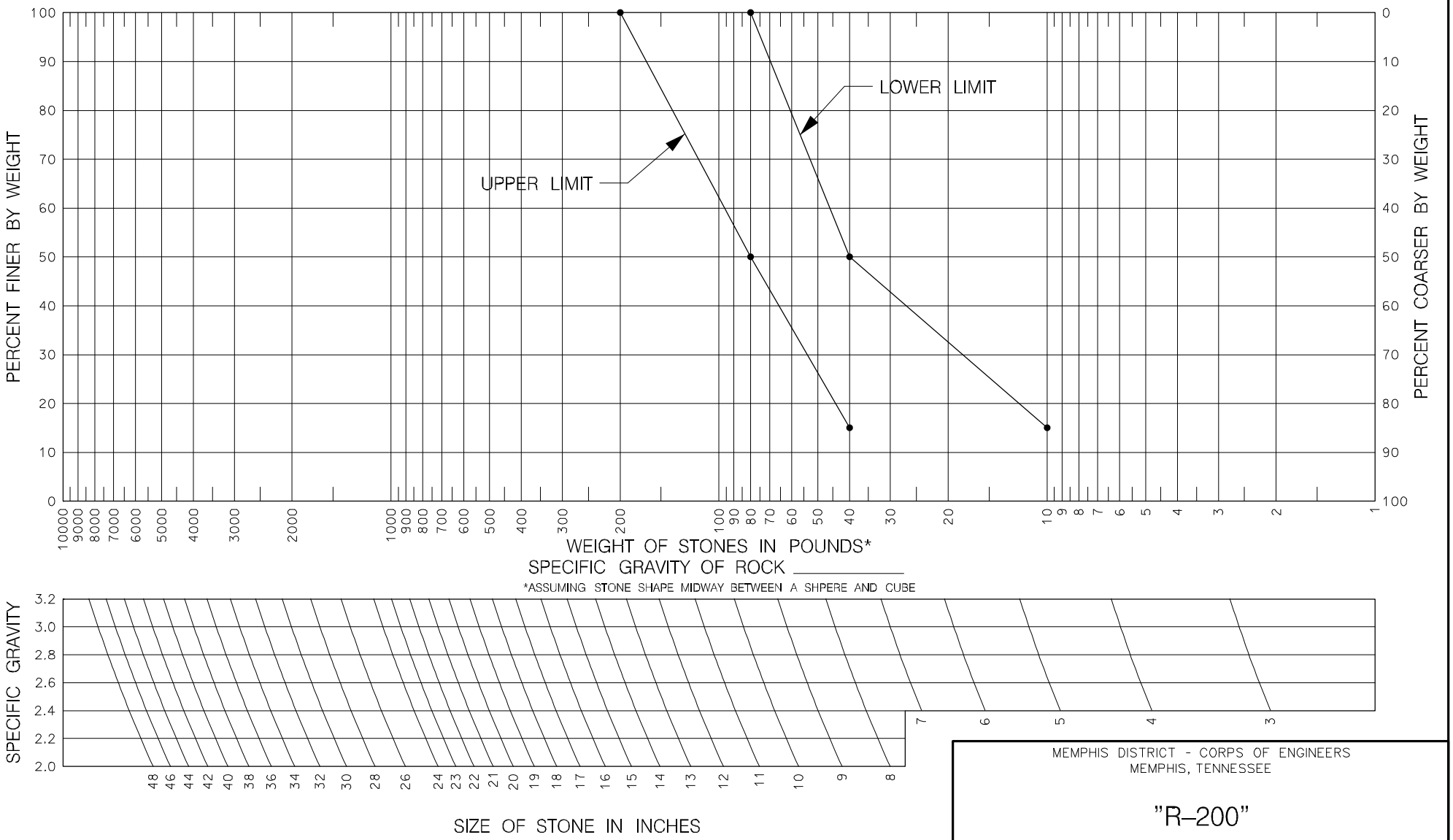

MEMPHIS DISTRICT - CORPS OF ENGINEERS
MEMPHIS, TENNESSEE

"R–200"

PROJECT: _____ DATE: _____

RIPRAP GRADATION CURVES

PLATE VIII

ENG FORM 4055
APR 67

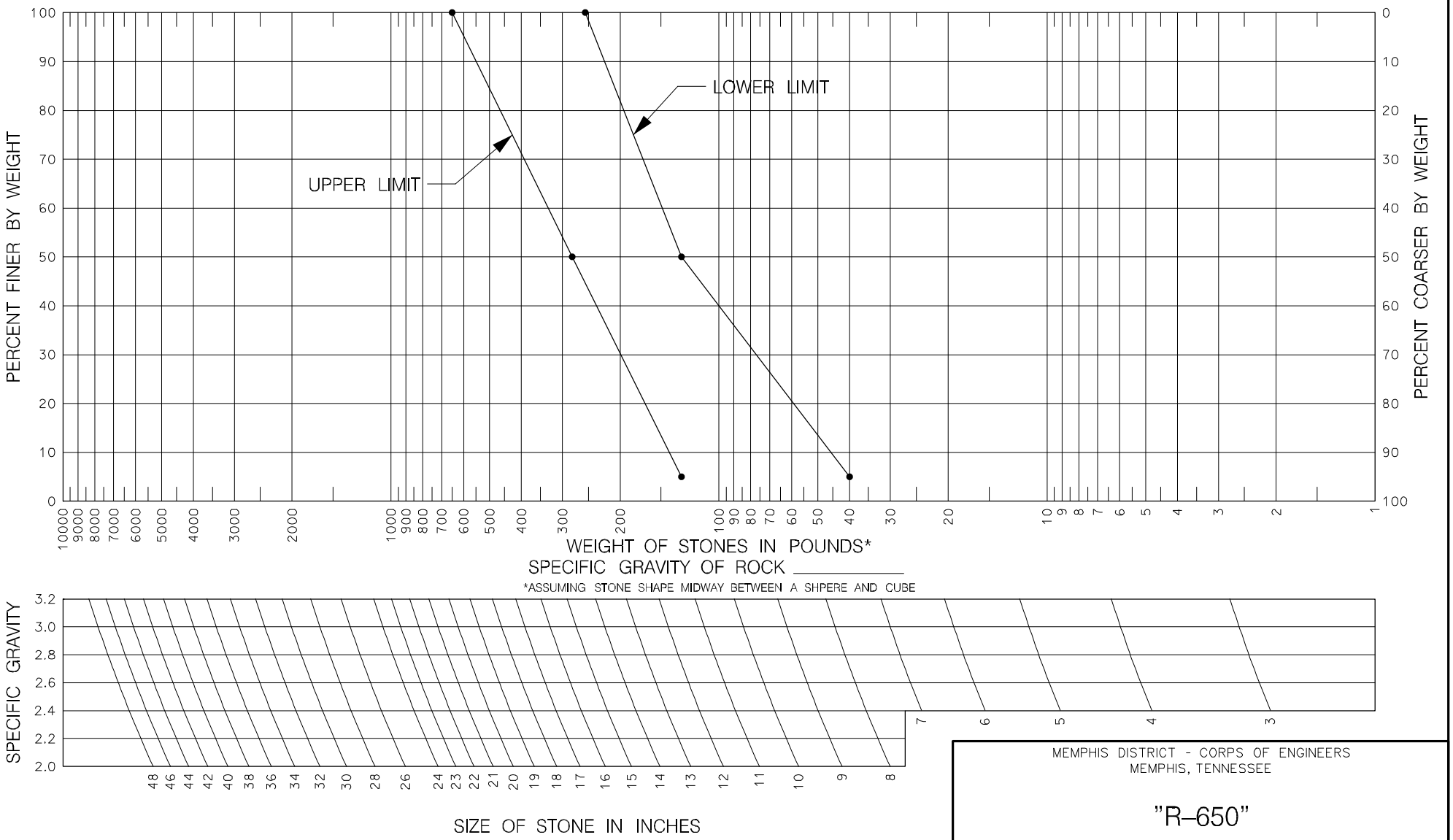

MEMPHIS DISTRICT - CORPS OF ENGINEERS
MEMPHIS, TENNESSEE

"R–650"

PROJECT: _____ DATE: _____

RIPRAP GRADATION CURVES

PLATE IX

ENG FORM 4055
APR 67

DIVISION 2 - SITE WORK

SECTION 02220

DEWATERING

TABLE OF CONTENTS

PART 1 GENERAL 1

1.1 SCOPE 1
1.2 QUALITY CONTROL 1
1.3 GENERAL 1
1.4 DEFINITIONS 2
1.4.1 Dewatering 2
1.4.2 Dewatering System 2
1.4.3 Flooding 2
1.4.4 Unwatering 2
1.4.5 Rewatering 2
1.5 DESIGN 2
1.6 DEWATERING REQUIREMENTS 3
1.7 SUBMITTALS……. ……..5

PART 2 PRODUCTS (Not Applicable) 5

PART 3 EXECUTION 5
3.1 INITIAL TESTING 5
3.2 REVIEW OF SYSTEM DESIGN AND PERFORMANCE 6
3.3 OPERATION 6
3.4 MAINTENANCE AND SERVICING 6
3.5 STANDBY PUMPING EQUIPMENT POWER 7
3.6 REMOVAL 7

SECTION 02220

DEWATERING

PART 1 GENERAL

1.1 SCOPE

The work provided for herein consists of furnishing all plant, labor, material and equipment and performing all operations required for designing, furnishing, installing and operating a system or systems to dewater the excavation area; maintaining the area free from water during construction operations; rewatering the area under controlled conditions at the termination of the dewatering; and removing the system.

1.2 QUALITY CONTROL

The Contractor shall establish and maintain quality control for all dewatering operations to assure compliance with contracting requirements and maintain records of his quality control for all construction operations, including but not limited to the following:

(1) Fabrication and workmanship.

(2) Installation, operation and removal.

(3) Monitoring free water surface and piezometric elevations.

(4) Measuring effluent from dewatering system.

(5) Monitoring of sanding.

A copy of these records and tests, as well as the corrective action taken, shall be furnished the Government. Reports of operation and inspection shall include the following data: piezometer elevations, river stages, time of operation of each well, effluent discharge, sanding rates during pump test, problems encountered, proposed actions, and any other pertinent data.

1.3 GENERAL

All permanent work under this contract except as otherwise specified shall be carried on in areas free of water. The Contractor shall design, furnish, install, operate and maintain such facilities necessary to accomplish the following:

(1) Collect and dispose of all surface water in the protected area regardless of source.

(2) Control and dispose of all surface water around the periphery of the excavation areas to prevent such water from entering the excavation.

(3) Lower and maintain the water table at or below elevation 225.75 NGVD (3 feet below the bottom of the outlet structure excavation).

(4) Install and monitor construction piezometers.

-

1.4 DEFINITIONS

1.4.1 Dewatering

Dewatering defines the lowering of the ground water below the slopes and bottom of the excavation to ensure dry, firm working conditions and the reduction to safe levels of any hydrostatic uplift pressures in any confined foundation strata and/or aquifers which is necessary to ensure the stability and integrity of the foundation.

1.4.2 Dewatering System

Dewatering System defines the machinery, equipment and appurtenances necessary for and related to the accomplishment of dewatering, and the collection and disposal of all surface water within the protected area.

1.4.3 Flooding

Flooding of the excavation is defined as the controlled process of filling the excavation with water to a specified elevation and at a specified rate.

1.4.4 Unwatering

Unwatering is defined as the process of removing all water within an excavation.

1.4.5 Rewatering

Rewatering is defined as the controlled process of allowing the ground water to return to its natural occurring elevation at a specified rate when the construction is completed and the dewatering system is no longer required.

1.5 DESIGN

The dewatering system shall be designed by a Professional Engineer licensed to practice in the State of Arkansas, using accepted methods of engineering design consistent with the best current practice. The Contractor shall perform necessary tests and/or analyses of the water and soil environment at the site to satisfy himself that the materials used in his system will not corrode or otherwise deteriorate to such an extent that the system will not perform satisfactorily during the life of the contract.

1.6 DEWATERING REQUIREMENTS

The dewatering system for the excavation plan as shown on the drawings shall be of a type and capacity to accomplish all requirements specified herein.

(1) The dewatering system shall be designed, installed and operated to dewater the excavation for Ditch 81 stages up to and including elevation 242 ft.

(2) The system shall be of such capacity that it will lower and maintain the free water and piezometric levels, to an elevation at least 3 feet below all earth slopes and excavation surfaces lying within the area, inclusive of the interior slopes of the cofferdam embankments proper. The system shall have sufficient capacity to accomplish this desired result allowing for normal variations in soil properties and foundation conditions.

(3) The water level shall be maintained continuously at or below the elevations specified above so that construction operations can be performed without interruption due to wet conditions.

(4) No upward or vertical or lateral flow of ground water into the work area will be permitted at any time. The dewatering system shall be designed, constructed and operated at all times, including unwatering, rewatering, and/or flooding, so as to prevent movement and/or piping of the foundation, excavation slopes and fill materials. The system shall be operated as necessary during dewatering, unwatering, flooding and rewatering so as to maintain piezometric levels, within the dewatered area, at or beneath the elevation of the water level in the excavation.

(5) The system shall consists of wells pumps, sumps, sump pumps, ditches and necessary appurtenances capable, at all river stages less than or equal to a Ditch 81 stage of elevation 242 ft (NGVD) of intercepting seepage before it exits on any interior surface or excavation face and of providing control of surface water. The required dewatering shall be accomplished by using a system of deep wells located on the berm between the excavation and the riverside cofferdam to lower the piezometric level in the sand stratum as required in (3) above to prevent flooding filter materials and fresh concrete. Protection of all slopes will be required to prevent erosion under normal surface runoff and construction conditions.

(6) Initial unwatering of an excavation need not be accomplished by sumping alone, but may utilize sumping in addition to positive dewatering accomplished with a system meeting the requirements of (5) above. Initial unwatering shall at all times fulfill the requirements of (4) above.

(7) Rewatering and/or flooding of the area shall be accomplished by directing surface and ground water into the area. The dewatering system shall be kept operating at full capacity during such conditions, with dewatering effluent being directed into the excavation. Protection of slopes and excavation surfaces shall be provided as necessary to prevent erosion during flooding operations. No upward or vertical or lateral flow of ground water into the excavation will be permitted.

(8) Burying of headers will be allowed only in areas and to depths absolutely necessary for protection against damage at construction equipment crossing. The effluent from the dewatering system will be required to be discharged over the top of the riverside cofferdam and extend to the cofferdam toe before release from the discharge pipe(s). The water shall be controlled to prevent erosion or damage to the existing natural ground.

(9) A system of construction piezometers will be required to monitor free water surface elevations and piezometric elevations to evaluate the effectiveness of the dewatering system in fulfilling the requirements specified herein. Piezometers shall be of adequate numbers and in suitable arrangements and depths for determining the free water surface elevations and piezometric elevation over the area. A minimum of three piezometers shall be installed with general locations in the excavation area near the outlet structure, the inlet structure and the centerline of the levee. The three piezometers shall be installed in the underlying sand strata with the tip of the screen placed at elevation 210 ft. (NGVD). The piezometer construction shall consist of PVC riser pipe and screen (ASTM 1785, Schedule 40). Care shall be taken during construction to ensure that the piezometer is not damaged. The other two piezometers will be removed after the completion of the pumping station structure. See paragraph 3.2 for submittal and approval of piezometer details and installation procedures. The Contractor shall make a minimum of one reading per piezometer, per 24-hour period, a minimum of 20 hours apart, based on a 7-day week. These piezometer readings, along with corresponding river stage readings, shall be recorded on an approved form and reported to the Contracting Officer within 12 hours after they are obtained. If, in the opinion of the Contracting Officer, more frequent readings are required, the Contractor will be directed as to the number and time that these readings are required. If additional readings are directed, an equitable adjustment in the contract unit price for dewatering will be made.

(10) The system shall include mechanical means for measuring the effluent from each well as well as the total effluent of the dewatering system. Devices and technique used in measurement shall be acceptable to the Contracting officer. The Contractor shall make a minimum of one reading per instrument, per 24-hour period, a minimum of 20 hours apart, based on a 7-day week. These instrument readings, along with corresponding river stage readings, shall be recorded on an approved form and reported to the Contracting Officer within 12 hours after they are obtained. If, in the opinion of the Contracting Officer, more frequent readings are required, the Contractor will be directed as to the number and time that these readings are required. If additional readings are directed, an equitable adjustment in the contract unit price for dewatering will be made.

(11) The system shall be designed, installed and operated in a manner that will preclude removal of materials from the foundation by the pumping operation (hereafter referred to as "sanding"). After installation, each well shall be individually pump-tested at maximum design flow to verify acceptability with respect to sanding. Any well or wellpoint segment found sanding at a rate exceeding one pint per 25,000 gallons of effluent during the individual pump-test of maximum design flow shall be replaced in a manner acceptable to the Contracting Officer, and at no additional cost to the Government.

(12) The rate of unwatering the excavation shall not exceed 5 feet per day for the first 10 feet and one foot per day thereafter until completely unwatered.

(13) The maximum rate of rise in flooding or rewatering the excavation shall be one foot per day until the water surface reaches elevation 229.75, and then 2 feet per day thereafter until completely flooded. (Provisions and requirements for emergency flooding are given in paragraph 3.3 OPERATION, below).

1.7 SUBMITTALS

Government approval is required for submittals with a "GA" designation; submittals having an "FIO" designation are for information only. The following shall be submitted in accordance with Section 01330 SUBMITTAL PROCEDURES:

SD-01 Data

Equipment; GA. Falling Head Tests; GA. Piezometer Readings; GA.
Monitoring of Sanding; GA.

List of proposed equipment to be used in performance of construction work including descriptive data.

SD-04 Drawings

Shop drawings of the complete dewatering system; GA.

SD-09 Reports
Dewatering Design, Installation, and Operating Procedures. GA.
.

Calibration curves and related test results prior to using the device or equipment being calibrated. Copies of field-test results within 24 hours after the tests are performed. Test results from samples, not less than 30 days before material is required for the work. Results of laboratory tests for quality control purposes, for approval, prior to using the material.

PART 2 PRODUCTS (Not Applicable)

PART 3 EXECUTION

3.1 INITIAL TESTING

Upon installation of the system, the Contractor shall test and evaluate the completed system to demonstrate to the satisfaction of the Contracting Officer that the system is, in fact, capable of performing the intended dewatering operation as outlined herein. This testing shall include complete falling head tests to be conducted on each piezometer.

3.2 REVIEW OF SYSTEM DESIGN AND PERFORMANCE

The Contractor shall submit to the Contracting Officer, for review, details of his proposed dewatering facilities, including the type of system, planned layout and sizes of wells, headers, including all lengths requiring burial, collectors, ditches, piezometers, sumps and pumps; capacities of standby pumping and power supply facilities; number, type, location, proposed method of installation, and proposed methods of testing of piezometers; facilities for measuring the flow of water pumped from each well of the dewatering system; facilities for monitoring of sanding; provisions for disposal of water riverside of the mainline levee from the dewatering system; and plan of operation including flooding and rewatering plans. This submittal shall include the design capacity of each well at the design stage, and shall be submitted no later than 30 days prior to installation of the system. The Contractor's proposed dewatering facilities will be reviewed for general design concept, gross capacity at design stages, and flooding and rewatering plans. The Contractor retains full responsibility for design, installation, operation and performance of the system, facilities, and its components. The Contractor shall install the entire dewatering system and shall make no reduction to the planned system without the prior written approval of the contracting Officer. If during the progress of the work, the installed dewatering system proves inadequate to meet the requirements specified, including piezometers, the Contractor shall, at his expense, furnish, install and operate such additional dewatering facilities and/or make such changes, either in features of the system or the plan of operation, as may be necessary to perform the required dewatering in a satisfactory manner. Such changes and additions shall be approved in writing by the Contracting Officer prior to being made.

3.3 OPERATION

The Contractor will be required to perform such dewatering and to maintain the work areas in a dry condition as long as is necessary for the work under this contract. Once an area is dewatered, it shall be maintained in a dewatered condition until all work in that area is completed, unless emergency flooding is directed or approved by the Contracting Officer. In the event that emergency flooding is deemed necessary, the protected area shall be flooded in accordance with the sequence of emergency flooding proposed by the Contractor and approved by the Contracting Officer. However, the Contractor shall not flood the protected areas without approval to do so by the Contracting Officer. If emergency flooding is directed by the Contracting Officer, based on a predicted excessive river stage, the Contractor will be compensated for damages to permanent work in accordance with the "Damage to Work" clause in the Special Clauses. Also, an equitable adjustment will be made in the contract for repair of damages to the cofferdam and dewatering systems provided such damages are not due to the fault or negligence of the Contractor. However, all costs resulting from flooding necessitated because of the Contractor's fault, negligence or convenience will be borne by the Contractor. If flooding is directed by the Contracting Officer for reasons other than those above all extra costs will be borne by the Government and an equitable adjustment in the contract price will be made for the costs in accordance with the CONTRACT CLAUSE entitled "Changes".

3.4 MAINTENANCE AND SERVICING

The Contractor shall be responsible for the maintenance, servicing and repairs of the entire dewatering system and appurtenances during the life of the contract, including replacement of any and all wells, and piezometers found performing unsatisfactorily.

3.5 STANDBY PUMPING EQUIPMENT POWER

The Contractor shall furnish standby pumping equipment power as follows:

(1) Diesel or liquid petroleum gas prime movers for pumps shall have 50% standby equipment.

(2) Portable electric generators shall have 100% connected standby equipment.

(3) Commercial electric power, if available, shall have 100% standby electric generating equipment.

3.6 REMOVAL

The dewatering facilities require maintaining a dry condition within the protected area shall be maintained until completion of the work within the protected area, and then shall be completely removed. However, no dewatering facilities of any kind shall be removed without prior approval of the Contracting Officer. All wells, pumps and appurtenances employed in the dewatering system and all materials other than earth shall remain the property of the Contractor, and shall be removed by him from the site of the work. All holes shall be plugged as follows: The riser pipes for all wells and piezometers shall be completely removed and filled with bentonite-cement grout. However, the screens of the deep well system may remain upon approval of the Contracting Officer. Plugging shall be accomplished by inserting a grout pipe to the full depth of the well or riser pipe and the grout either poured or pumped in as the riser pipe is removed. The grout for plugging the hole shall consist of a mixture of portland cement, bentonite, and water proportioned as directed by the Contracting Officer. The water percentage may be varied for a more effective plugging job. The grouting of abandoned wells and piezometer riser pipes in lieu of removing them will not be permitted unless approved by the Contracting Officer.

--End of Section--

DIVISION 2 – SITE WORK

SECTION 02221

EXCAVATION

TABLE OF CONTENTS

PART 1 GENERAL 1
1.1 SCOPE 1
1.2 QUALITY CONTROL 1

PART 2 PRODUCTS (Not Applicable) 1

PART 3 EXECUTION 1
3.1 EXCAVATION 1
3.1.1 General 1
3.1.2 Embedment of Riprap 2
3.2 DISPOSITION OF MATERIAL 2
3.2.1 Suitable Materials 2
3.2.2 Unsuitable Materials 3
3.2.3 Temporary Ramps 3
3.3 SLIDES 3
3.4 SEDIMENTS 3

SECTION 02221

EXCAVATION

PART 1 GENERAL

1.1 SCOPE

The work covered by this section consists of furnishing all plant, labor, equipment, and materials, and performing all operations necessary for inlet, outlet and structural excavation all as indicated on the drawings and/or specified herein. Excavation incidental to the installation of the dewatering systems is covered in SECTION 02220 – DEWATERING.

1.2 QUALITY CONTROL

The Contractor shall establish and maintain quality control for the work specified in this section to assure compliance with contract requirements and maintain records of his quality control for all construction operations including but not limited to the following:

(1) Excavation

Layout, bottom widths, side slopes, transitions, disposition of materials.

(2) Slides

Locations, limits, method and equipment used where remedial work has been directed.

Removal of Sediments

Location, limits, removal, disposition of materials.

A copy of these records and tests, as well as the records of corrective action taken, shall be furnished the Government.

PART 2 PRODUCTS (Not Applicable)

PART 3 EXECUTION

3.1 EXCAVATION

3.1.1 General

The Contractor shall excavate and remove all material of whatever nature encountered as may be necessary to excavate the inlet, outlet and structural excavation areas including excavation

necessary to place the stone protection as indicated, and the foundation for the culvert pipes; all to the lines and grades indicated therefor on the drawings. The Contractor shall also perform excavation as necessary to remove unsuitable material below the structural excavation lines and grades to the elevations directed by the Contracting Officer. Excavation may be performed with any type of equipment suitable for the work. The methods employed shall be such that will not induce slides or dislodgment of foundation material, and that do not endanger the safety of personnel. The volume of material removed below the indicated bottom grade for structural excavation, as directed by the Contracting Officer will be paid for at the contract unit price per cubic yard for "Excavation." Any excavation below the grades shown on the drawings for structural excavation or below the grades directed by the Contracting Officer, shall be refilled with backfill material as approved by the Contracting Officer and as specified in SECTION 02222 – BACKFILLS AND EMBANKMENT at the expense of the Contractor and no payment will be made therefor. Areas resulting from directed excavation below structural excavation lines and grades shall be refilled with either impervious or pervious backfill material as specified in SECTION 02222 – BACKFILLS AND EMBANKMENT, and such refill will be paid for at the contract unit price per cubic yard for either "Impervious Backfill" or "Pervious Backfill". The above requirements are modified to the extent that a vertical tolerance of 2 inches above or below the theoretical cross sections will be allowed for the excavation outside the structural excavation areas and the 48-inch diameter culvert pipes provided that the theoretical cross-sectional areas are obtained, that the finished lines and grades are free from abrupt changes, and that the drainage pattern indicated on the drawings is maintained. The finished lines of the inlet and outlet channels shall conform to the top elevation of the riprap at and in the vicinity of the junction of such surfaces.

3.1.2 Embedment of Riprap

The Contractor shall excavate, in areas where bedding material and riprap are required, in such a manner that the bedding material and riprap are placed beneath the theoretical cross section as indicated on the drawings. Tolerances for such excavation shall be -2 inches. The finished grade of the adjacent channel excavation shall conform to the finished riprap grade at and in the vicinity of the junctions of these surfaces.

3.2 DISPOSTION OF MATERIALS

3.2.1 Suitable Materials

Suitable materials from the excavations prescribed in this section shall be utilized to the extent required for constructing prescribed backfills and embankment, including the cofferdams, but exclusive of impervious material which is defined in SECTION 02222 – BACKFILLS AND EMBANKMENT. Such materials from the excavations may be placed directly in the cofferdams and the permanent work when such procedure is practicable. Where direct placement is not practicable, suitable material from the excavations may be stockpiled in the excess excavated material deposit areas, indicated on the drawings. The method and location of stockpiling material must meet the approval of the Contracting Officer. Suitable materials in excess of the quantity necessary to construct the various backfills and embankments shall be disposed of as specified for unsuitable materials in 3.2.2 below.

3.2.2 Unsuitable Materials

Material from the excavations prescribed in this section which are not suitable for incorporation in the backfills and embankments shall be permanently disposed of in the excess excavated material deposit area indicated on the drawings. All material ultimately left in the deposit areas shall be spread to a uniform depth over the area designated on drawing 4 of the plans. The material shall be dressed to produce smooth surfaces and in such manner that drainage will result. Finished appearance of the material shall meet the approval of the Contracting Officer. The temporary stockpile material shall be constructed at a slope no steeper than 1V: 2H and at a minimum distance of 20 feet from the top of construction excavations. The height of temporary stockpile material shall not exceed 20 feet. Compaction of material placed in the deposit areas will not be required except that obtained by necessary dressing operations.

3.2.3 Temporary Ramps

The Contractor will be permitted to construct ramps over the levee at his expense, for transportation of material. Such ramps and the location thereof shall be subject to the approval of the Contracting Officer and the provisions of SECTION 00800, paragraph 1.34. When the ramps are no longer needed they shall be removed and the material therefrom shall be disposed of as specified in 3.2.1 and/or 3.2.2 above. Areas formerly occupied by the ramps shall be returfed as specified in SECTION 02935 - TURF at the Contractor's expense and to the satisfaction of the Contracting Officer.

3.3 SLIDES

In case sliding occurs in any part of the excavations prescribed in this section after they have been excavated, but prior to final acceptance of all work under the contract, the Contractor shall repair the slide as directed the Contracting Officer. In case the slide is caused through the fault of the Contractor, it shall be repaired at no cost to the Government. In case the slide is due to no fault of the Contractor, an equitable adjustment in the contract price will be made for the repairs in accordance with the provisions of Clause 3, "Changes'" of the General Provisions.

3.4 SEDIMENTS

Prior to final acceptance of all work under the contract, the Contracting Officer may require removal of sediments from the inlet and outlet channels as necessary to restore them to grade and section. The volume of material removed will be paid for at the contract unit price per cubic yard for "Excavation."

-- End of Section --

DIVISION 2 – SITE WORK

SECTION 02222

BACKFILLS AND EMBANKMENT

TABLE OF CONTENTS

PART 1 GENERAL 1
1.1 SCOPE 1
1.2 QUALITY CONTROL 1
1.3 APPLICABLE PUBLICATIONS 1
1.4 EQUIPMENT 2
1.5 ORDER OF WORK 2

PART 2 PRODUCTS (Not Applicable) 2

PART 3 EXECUTION 2
3.1 BACKFILLS AND EMBANKMENTS 2
3.1.1 General 2
3.1.2 Materials 3
3.1.2.1 Pervious Backfill 3
3.1.2.2 Impervious Backfill and Cofferdams 3
3.1.3 Placement 3
3.1.3.1 Compacted Impervious Backfill and Pervious Backfill 4
3.1.3.2 Semi-Compacted Impervious Backfill and Cofferdam Embankment 4
3.1.4 Compaction 4
3.1.4.1 Pervious Backfill 4
3.1.4.2 Compacted Impervious Backfill 4
3.1.4.3 Semi-Compacted Impervious Backfill and Cofferdams 5
3.1.4.4 Alternative Compaction Equipment 5
3.1.5 Slides 5
3.1.6 Removal of Cofferdams 6

SECTION 02222

BACKFILLS AND EMBANKMENT

PART 1 GENERAL

1.1 SCOPE

The work covered by this section consists of furnishing all plant, labor, equipment, and materials and performing all operations in connection with construction of pervious backfill, impervious backfill and cofferdams.

1.2 QUALITY CONTROL

The Contractor shall establish and maintain quality control for the work specified in this section to assure compliance with contract requirements and maintain records of his quality control for all construction operations including but not limited to the following:

(1) Equipment

Type, size, suitability.

(2) Backfills and Embankment

Layout, limits, type, materials, slopes, compaction, cross section, tolerances.

(3) Cofferdams

Layout, limits, placement, grade and section, tolerance, compaction, suitability of materials, removal and disposal of materials.

A copy of these records and tests, as well as the records of corrective action taken, shall be furnished the Government.

1.3 APPLICABLE PUBLICATIONS

The following publications of the issue listed below, but referred to thereafter by basic designation only, form a part of this specification to the extent indicated by the references thereto:

AMERICAN SOCIETY FOR TESTING AND MATERIALS (ASTM) PUBLICATIONS

D 698-91	Compaction Characteristics of Soil using Standard Effort (12,400 ft – 1bf/ft³ (600 kn.-M/M³)) Effort
D 1556-90 (R 1996)	Density and Unit Weight of Soil in Place by the Sand-Cone Method
D 2216-92	Laboratory Determination of Water (Moisture) Content of Soil and Rock
D 2487-93	Classification of Soils for Engineering Purposes (Unified Soil Classification System)
D 2922-91	Density of Soil and Soil-Aggregate in Place by Nuclear Methods (Shallow Depth)
D 3017-88 (R 1993)	Water Content of Soil and Rock in Place by Nuclear Methods (Shallow Depth)
D 4253-93	Maximum Index Density and Unit Weight of Soils (R 1996) Using a Vibratory Table
D 4254-91	Minimum Index Density and Unit Weight of Soils (R 1996) and Calculation of Relative Density
E 329-95c	Agencies Engaged in the Testing and/or Inspection of Materials in Construction

1.4 EQUIPMENT

Equipment shall be of types suitable for construction of the prescribed backfills and embankment, subject to the provisions as specified in paragraph 3.1.3 below.

1.5 ORDER OF WORK

The landside cofferdam shall be in place before the levee is breached to construct the riverside cofferdam.

PART 2 PRODUCTS (NOT APPLICABLE)

PART 3 EXECUTION

3.1 BACKFILLS AND EMBANKMENTS

3.1.1 General

All backfills and embankment shall be placed to the lines, grades, and sections as indicated therefor on the drawings. A tolerance of two-tenths of a foot above or below grade will be allowed in the placement of the backfills and embankment except the cofferdams, except where structures are placed upon the backfills, and unless otherwise directed by the Contracting Officer. A tolerance of five-tenths of a foot above grade will be permitted in the construction of the cofferdam embankment provided that any excess material is so distributed that the crown of the cofferdam drains, and that there are no abrupt humps or depressions in surfaces or bulges in the width of the crown, and the side slopes are uniform. No brush, tree roots, sod or other objectionable material shall be placed in the backfills and embankment. The Contractor will be required, when directed, to remove any materials that the Contracting Officer considers objectionable in the backfills or embankments. The Contracting Officer will determine the suitability of each section of the foundation for placing materials thereon. No backfill or embankment shall be placed on or against concrete less than 14 days old, without prior approval of the Contracting Officer. Until removal is authorized, the Contractor shall perform such maintenance on the cofferdams as necessary to insure that the integrity of the cofferdams is not impaired and that the cofferdams are maintained to full grade and section.

3.1.2 Materials

3.1.2.1 Pervious Backfill

Pervious backfill shall be clean concrete sand conforming to ASTM C 33. The gradation of all pervious backfill material shall be as follows.

Sieve	Percent Passing
3/8 inch	100
No. 4	95 to 100
No. 8	80 to 100
No. 16	50 to 85
No. 30	25 to 60
No. 50	10 to 30
No. 100	2 to 10

3.1.2.2 Impervious Backfill and Cofferdams

Material for the impervious backfill and cofferdams shall be selected material from the required excavations. Any additional material needed for the backfill and cofferdams shall be obtained off-site. No additional payment will be made. The Contractor is responsible for any permits required and shall be in compliance with all State, Federal and local laws. Any suitable material from such sources, classifying under the Unified Soil Classification System (as shown on the Soil Boring Legend) as clay, sandy clay, silty clay, or clayey sand, that conforms to the general requirements specified in 3.1.1 above, and that is stable when compacted may be used for such backfill and embankment. The landside cofferdam shall be in place before the levee is breached to complete the riverside cofferdam.

3.1.3 Placement

3.1.3.1 Compacted Impervious Backfill And Pervious Backfill

Compacted pervious and impervious backfills shall be placed in layers not exceeding 8 inches in thickness prior to compaction, except that where compaction by mechanical hand tamps is required the layers shall not exceed 6 inches in thickness prior to compaction. The materials may be spread by any approved equipment in horizontal layers and each layer shall be compacted as specified in 3.1.4.1 or 3.1.4.2 below, as applicable. At least a one-foot thickness of the pervious backfill in the areas upon which concrete structures will be constructed shall be placed after structural excavation but prior to drying out of base clay material. Self-propelled vibratory equipment may be used only on pervious backfills. Crawler-type tractors, tamping rollers, vibratory equipment and other similar compaction equipment shall not be used within 2 feet of any completed or partially completed structure. Compaction within 2 feet of completed or partially completed structures shall be accomplished by the use of mechanical hand tamps or other approved methods and equipment. The Contractor shall perform standard compaction tests to determine optimum water contents and maximum densities and will perform field density and water content tests as acceptance tests; however, the Contractor shall perform field density and water content tests on each layer of each type of material placed to assure that proper compaction is being achieved. A minimum of one test per lift will be required.

3.1.3.2 Semi-Compacted Impervious Backfill and Cofferdam Embankment

Semi-Compacted Impervious Backfill and Cofferdam embankments shall be placed or spread in layers, the first layer not exceeding 6 inches in thickness and succeeding layers not exceeding 12 inches in thickness prior to compaction. Layers shall be compacted as specified in 3.1.4.3 below. Immediately prior to placement of the fill material, the entire earth surface on or against which fill is to be placed shall be thoroughly broken to a depth of 6 inches. Compaction within 2 feet of completed or partially completed structures shall be accomplished by the use of mechanical hand tamps or other approved methods and equipment.

3.1.4 Compaction

3.1.4.1 Pervious Backfill

Each layer of the fill shall be compacted to 70% relative density as determined from the void ratios of the coarse grained soil in its loosest and densest states (ASTM D-2049). The field density determination shall be by the Sand-Cone Method (ASTM D 1556) or the Nuclear Method (ASTM D 2922, Method B). Moisture control of the compacted pervious backfill will not be required. The Contractor shall perform standard density tests (ASTM D 698) to determine maximum densities for each type of material used in the fill. The Contractor shall perform field density tests on each layer of material placed to assure that proper compaction is being achieved. The location where the contractor is to take field density tests shall be as specified by the Contracting Officer.

3.1.4.2 Compacted Impervious Backfill

Each layer of compacted impervious backfill shall be compacted to a density of at least 95 percent of the laboratory density obtained by the density test ASTM D 698. The field density determination shall be by the Sand-cone Method ASTM D 1556 or the Nuclear Method (ASTM D 2922 Method B). The moisture content after compaction shall be within the limits of 2 percentage points above optimum and 3 percentage points below optimum moisture content as determined by the Contracting Officer in accordance with ASTM D 698. The field moisture content after compaction shall be performed in accordance with ASTM D 2216 or ASTM D 3017. The materials may require moistening or aerifying as necessary to provide the above specified moisture content. The Contractor shall perform field density and water content tests on each layer of material placed to assure that proper compaction is being achieved. The location where the contractor is to take field density and water content tests shall be as specified by the Contracting Officer. The Contractor may have to obtain suitable material from an off-site source.

3.1.4.3 Semi-Compacted Impervious Backfill and Cofferdams

Except as specified in 3.1.3.2 above, each layer of semi-compacted impervious backfill and cofferdam embankment shall be compacted by at least three passes of a crawler-type tractor weighing not less than 20,000 pounds, exerting a unit tread pressure of not less than 6 pounds per square inch, and operated at a speed not exceeding 3.5 miles per hour. Other approved equipment as specified in 3.1.4.4 below may also accomplish compaction. A pass shall consist of one complete coverage of the surface of a layer by the treads of the tractor or other compacting equipment.

3.1.4.4 Alternative Compaction Equipment

The Contractor may propose for use alternative types of compaction equipment not included in these specifications, for compaction of the cofferdam embankment. The suitability of the alternative equipment must be demonstrated to the Contracting Officer by a field test conducted by and at the expense of the Contractor. The alternative compaction equipment must be capable of properly compacting the soil so that no planes of weakness or laminations are formed in the fill. The field test shall consist of compacting a minimum of three layers of an area of embankment with the alternative type equipment. The Contractor at no additional cost to the Government shall then perform testing and inspection of the area. The Contracting Officer will provide procedures for constructing and testing the area. Each proposed alternative type of equipment must be capable of compacting a layer of soil at least 12 inches thick. A minimum of four complete passes over each layer of the test fill will be required for each type of alternative equipment that is allowed for use, unless in the course of constructing the test fill the Contractor is able to demonstrate that proper compaction can be obtained with fewer passes. Alternative type equipment shall be operated at speeds not to exceed 3.5 miles per hour.

3.1.5 Slides

In the event of sliding of any part of the backfills or embankments including cofferdams during their construction, or after their completion, but prior to acceptance of all work under the contract, the Contractor shall upon written order of the Contracting Officer, repair the slide as

directed. In case the slide is caused through fault of the Contractor, repairs shall be performed without cost to the Government. In case the slide is due to no fault of the Contractor, an equitable adjustment in the contract price will be made for its repair in accordance with Clause 3, "Changes," of the General Provisions.

3.1.6 Removal of Cofferdams

After the cofferdams have served their purpose and the Contracting Officer authorizes removal, they shall be removed by the Contractor. The areas after removal of the embankment shall be graded and smoothed so as to leave relatively smooth surfaces that will be compatible with adjacent surfaces. Materials removed shall be disposed of as specified for suitable and unsuitable materials, as applicable, in SECTION 02221 – EXCAVATION.

-- End of Section --

DIVISION 2 – SITE WORK

SECTION 02400

WALL DRAIN SYSTEM

TABLE OF CONTENTS

PART 1 GENERAL 1
1.1 SCOPE 1
1.2 QUALITY CONTROL 1
1.3 APPLICABLE PUBLICATIONS 1
1.4 SUBMITTALS 2

PART 2 PRODUCTS 2
2.1 MATERIALS 2
2.1.1 PVC Pipe 2
2.1.2 Geotextile 2
2.1.3 Washed Gravel Backfill 2
2.1.4 4-Inch Recessed Flap Gate at Wall Drain 3
2.1.5 Outlet Screen 3
2.1.6 Cleanout 3

PART 3 EXECUTION 3
3.1 INSTALLATION 3
3.1.1 Geotextile (Filter Fabric) 3
3.1.2 Washed Gravel Backfill 3
3.1.3 Pipe and Fittings 3

SECTION 02400

WALL DRAIN SYSTEM

PART 1 GENERAL

1.1 SCOPE

The work covered by this section consists of furnishing all labor, equipment and material, and performing all operations necessary for the construction of a complete wall drain system, and all other work incidental thereto as specified herein and/or indicated on the drawings.

1.2 QUALITY CONTROL

The Contractor shall establish and maintain quality control for the work specified in this section to assure compliance with contract requirements and maintain records of his quality control for all construction operations including but not limited to the following:

(1) Materials

Suitability for use, compliance with specified requirements.

(2) Installation

Location, grades, elevations, thickness, compaction, methods of compaction.

A copy of these records and tests, as well as the records of corrective action taken, shall be furnished the Government.

1.3 APPLICABLE PUBLICATIONS

The following publications of the issues listed below, but referred to thereafter by basic designation only, form a part of the specification to the extent indicated by the references thereto:

AMERICAN SOCIETY FOR TESTING AND MATERIALS (ASTM).

A 36/A36M-96	Carbon Structural Steel
B 209-96	Aluminum and Aluminum-Alloy Sheet and Plate
B 221-96	Aluminum-Alloy Extruded Bars, Rods, Wire, Profiles, and Tubes (Metric)
D 3034-96	Type PSM Poly (Vinyl Chloride) (PVC) Sewer Pipe and Fittings

1.4 SUBMITTALS

SD-04 DRAWINGS; GA.
Installation Details and Shop Drawings.

SD-09 REPORTS; FIO.
Materials.

SD-14 SAMPLES; GA.
Washed Gravel

PART 2 PRODUCTS

2.1 MATERIALS

2.1.1 PVC Pipe

PVC pipe shall conform to the requirements of ASTM D 3034 and be perforated as shown on the drawings.

2.1.2 Geotextile

Geotextile shall conform to requirements as specified in SECTION 02215.

2.1.3 Washed Gravel Backfill

Washed gravel backfill shall conform to the following requirements:

The washed gravel backfill material shall be composed of tough, durable particles, shall be reasonably free from thin, flat and elongated pieces, and shall contain no organic matter nor soft, friable particles. Grading shall conform to the following requirements:

U.S. Standard Sieve No.	Permissible Limits Percent by Weight, Passing
3-inch	100
1-1/2-inch	85-100
3/4-inch	35-70
3/8-inch	5-40
No. 4	0-5

The material shall be well graded between the limits shown. The Contractor shall furnish a representative sample of the material and the Contractor shall perform gradation tests. All points on individual grading curves obtained from representative samples of filter material shall lie between the boundary limits as defined by smooth curves drawn through the tabulated grading

limits plotted on a mechanical analysis diagram. The individual grading curves within these limits shall not exhibit abrupt changes in slope denoting either skip grading or scalping of certain sizes or other irregularities, which would be detrimental to the proper functioning of the filter. The Contractor shall furnish the material from off-site sources.

2.1.4 4-Inch Recessed Flap Gate at Wall Drain

The 4-inch recessed flap gate at wall drain shall conform to the dimensions shown on the plans. Shop drawings and specifications of wall type flap gates shall be submitted to the contracting officer prior to final approval.

2.1.5 Outlet Screen

The outlet screen shall be manufactured from 2-1/2" x 3/8" bar steel conforming to ASTM A 36, the woven wire screen shall be 1" x 1" #6 gage, all welded construction and the entire outlet screen shall be hot-dipped galvanized after fabrication. The steel mounting bolts shall be 1/2" x 6" stainless steel bolts. The Contractor shall submit shop drawings, showing dimensions, materials used fabrication, and mounting details.

2.1.6 Cleanout

The cleanout shall be as shown on the drawings, and the 4-inch diameter PVC plug shall be threaded for attachment to the 4-inch PVC pipe.

PART 3 EXECUTION

3.1 INSTALLATION

3.1.1 Geotextile (Filter Fabric)

Geotextile (Filter Fabric) conforming to the requirements of SECTION 02215 – GEOTEXTILE shall be placed as shown on the drawings around the gravel in which the PVC pipe is buried as shown on the drawings.

3.1.2 Washed Gravel Backfill

The washed gravel backfill material shall be placed around the PVC pipe as indicated on the drawings.

3.1.3 Pipe and Fittings

Pipe and fittings shall be placed at the location and to the lines and grades indicated therefor on the drawings. Pipe connections shall be carefully made as recommended by the materials manufacturer.

--End of Section--

SECTION TABLE OF CONTENTS

DIVISION 02 - SITE WORK

SECTION 02464

METAL SHEET PILING

PART 1 GENERAL……..…….……1
1.1 REFERENCES…….…..…….1
1.2 SUBMITTALS……1
1.3 DELIVERY, STORAGE AND HANDLING……..……2

PART 2 PRODUCTS……....3
2.1 METAL SHEET PILING…….….……..3
2.2 TESTS, INSPECTIONS, AND VERIFICATIONS……3

PART 3 EXECUTION…….….3
3.1 INSTALLATION...……...……..……..3
3.1.1 Pile Driving Equipment…….……3
3.1.2 Placing and Driving……...……4
3.1.2.1 Placing…….……..….4
3.1.2.2 Driving……..…….4
3.1.3 Cutting-Off and Splicing……...……4
3.1.4 Inspection of Driven Piling…….…..5
3.1.5 Pulling and Redriving…….…….…..5
3.2 REMOVAL BY PULLING……....….5
3.3 TREATMENT OF PILE TOPS…….…….….5

SECTION 02464

METAL SHEET PILING

PART 1 GENERAL

1.1 REFERENCES

The publications listed below form a part of this specification to the extent referenced. The publications are referred to in the text by basic designation only.

AMERICAN SOCIETY FOR TESTING AND MATERIALS (ASTM)

ASTM A 6	(1996b) General Requirements for Rolled Structural Steel Bars, Plates, Shapes, and Sheet Piling
ASTM A 328	(1993a) Steel Sheet Piling

FEDERAL SPECIFICATIONS (FS)

FS SS-C-153C	(Rev C) Cement, Bituminous, Plastic

1.2 SUBMITTALS

Government approval is required for all submittals with a "GA" designation; submittals having an "FIO" designation are for information only. The following shall be submitted in accordance with Section 01330 SUBMITTAL PROCEDURES:

SD-04 Drawings

Metal Sheet Piling; GA.

Detail drawings for sheet piling shall show complete piling dimensions and details, driving sequence and location of installed piling. Detail drawings shall include details and dimensions of templates and other temporary guide structures for installing piling. Detail drawings shall provide details of the method of handling piling to prevent permanent deflection, distortion or damage to piling interlocks.

SD-07 Schedules

Pile Driving Equipment; FIO.

Complete descriptions of sheet piling driving equipment including hammers, extractors, protection caps and other installation appurtenances shall be submitted for approval prior to commencement of work.

SD-08 Statements

Pulling and Redriving; GA.

The proposed method of pulling sheet piling shall be submitted and approved prior to pulling any piling.

SD-09 Reports

Interlocked Joint Strength; GA.

The Contractor shall furnish a certificate showing that the piling furnished has the required interlock strength as determined by test results of two representative test specimens, approximately 3 inches long, per test.

Materials Test; FIO.

Certified materials test reports showing that the sheet piling and appurtenant metal materials meet the specified requirements shall be submitted for each shipment and identified with specific lots prior to installing materials. Material test reports shall meet the requirements of ASTM A 6.

SD-18 Records

Driving Operations; FIO.

Records of the sheet piling driving operations shall be submitted after driving is completed. These records shall provide a system of identification which shows the disposition of approved piling in the work, driving equipment performance data, piling penetration rate data, piling dimensions and top and bottom elevations of installed piling.

1.3 DELIVERY, STORAGE AND HANDLING

Materials delivered to the site shall be new and undamaged and shall be accompanied by certified test reports. The manufacturer's logo and mill identification mark shall be provided on the sheet piling as required by the referenced specifications. Sheet piling shall be stored and handled in the manner recommended by the manufacturer to prevent permanent deflection, distortion or damage to the interlocks. Storage of sheet piling should also facilitate required inspection activities.

PART 2 PRODUCTS

2.1 METAL SHEET PILING

Metal sheet piling shall be hot-rolled steel sections conforming to ASTM A 328. The interlocks of sheet piling shall be free sliding, provide a swing angle suitable for the intended installation but not less than 5 degrees when interlocked, and maintain continuous interlocking when installed. Sheet piling shall be full-length sections of the dimensions shown. Sheet piling shall be provided with standard pulling holes located 4 inches below the top of the pile.

PROPERTIES OF SECTIONS

	Section Modulus Per Lin. Ft of Wall (in-cu)	Minimum Interlock Strength in Tension (lbs per lin. in)
PS27.5	2.0	3,000

2.2 TESTS, INSPECTIONS, AND VERIFICATIONS

Requirements for material tests, workmanship and other measures for quality assurance shall be as specified and in Section 05055 WELDING, STRUCTURAL and Section 05120 STRUCTURAL STEEL AND MISCELLANEOUS.

Materials tests shall conform to the following requirements. Sheet piling and appurtenant materials shall be tested and certified by the manufacturer to meet the specified chemical, mechanical and section property requirements prior to delivery to the site. Testing of sheet piling for mechanical properties shall be performed after the completion of all rolling and forming operations. Testing of sheet piling shall meet the requirements of ASTM A 6.

PART 3 EXECUTION

3.1 INSTALLATION

3.1.1 Pile Driving Equipment

Pile driving equipment shall have hammer-driving energy between 3,000 and 10,0000 foot-pounds as recommended by the equipment manufacturer for the piling and subsurface conditions to be encountered.

3.1.2 Placing and Driving

3.1.2.1 Placing

Any excavation required within the area where sheet pilings are to be installed shall be completed prior to placing sheet pilings. Pilings shall be carefully located as shown. Pilings shall be placed with out-of-plumbness not exceeding 1/8 inch per foot of length and true to line. Temporary wales, templates, or guide structures shall be provided to ensure that the pilings are placed and driven to the correct alignment. Pilings properly placed and driven shall be interlocked throughout their length with adjacent pilings to form a continuous diaphragm throughout the length or run of piling wall.

3.1.2.2 Driving

Pilings shall be driven with the proper size hammer and by approved methods so as not to subject the pilings to damage and to ensure proper interlocking throughout their lengths. Driving hammers shall be maintained in proper alignment during driving operations by use of leads or guides attached to the hammer. A protecting cap shall be employed in driving when using impact hammers to prevent damage to the tops of pilings. Pilings damaged during driving or driven out of interlock shall be removed and replaced at the Contractor's expense. Adequate precautions shall be taken to insure that pilings are driven plumb. Pilings in each run or continuous length of piling wall shall be driven alternately in increments of depth to the required depth or elevation. No piling shall be driven to a lower elevation than those behind it in the same run except when the pilings behind it cannot be driven deeper. If the piling next to the one being driven tends to follow below final elevation it may be pinned to the next adjacent piling. If obstructions restrict driving a piling to the specified penetration the obstructions shall be removed or penetrated with a chisel beam. If the Contractor demonstrates that removal or penetration is impractical the Contractor shall make changes in the design alignment of the piling structure as directed to insure the adequacy and stability of the cut-off wall. Pilings shall be driven to depths shown and shall extend up to the elevation indicated for the top of pilings. A tolerance of 2 inches above the indicated top elevation will be permitted. Pilings shall not be driven within 100 feet of concrete less than 7 days old.

3.1.3 Cutting-Off and Splicing

Pilings driven to refusal or to the point where additional penetration cannot be attained and are extending above the required top elevation in excess of the specified tolerance shall be cut off to the required elevation. Pilings driven below the required top elevation and pilings damaged by driving and cut off to permit further driving shall be extended as required to reach the top elevation by splicing when directed at no additional cost to the Government. Pilings adjoining spliced pilings shall be full length unless otherwise approved. The tops of pilings excessively battered during driving shall be trimmed when directed at no cost to the Government. Piling cut-offs shall become the property of the Contractor and shall be removed from the site.

3.1.4 Inspection of Driven Piling

The Contractor shall inspect the interlocked joints of driven pilings extending above ground. Pilings found to be out of interlock shall be removed and replaced at the Contractor's expense.

3.1.5 Pulling and Redriving

In the pulling and redriving of piles as directed, the Contractor shall pull selected pilings after driving to determine the condition of the underground portions of pilings. Any piling so pulled and found to be damaged to the extent that its usefulness in the structure is impaired shall be removed and replaced at the Contractor's expense. Pilings pulled and found to be in satisfactory condition shall be redriven when directed.

3.2 REMOVAL BY PULLING

The method of pulling piling must be approved. Pulling holes shall be provided in pilings as required. Extractors shall be of suitable type and size. Care shall be exercised during pulling of pilings to avoid damaging piling interlocks and adjacent construction. If the Contracting Officer determines that adjacent permanent construction has been damaged during pulling the Contractor will be required to repair this construction at no cost to the Government. Pilings shall be pulled one sheet at a time. Pilings fused together shall be separated prior to pulling unless the Contractor demonstrates to the satisfaction of the Contracting Officer that the pilings cannot be separated.

3.3 TREATMENT OF PILE TOPS

The surface of the piling wall embedded in concrete shall be coated using a bituminous material conforming to the requirements of FS SS-C-153C, Type I, Class A or B.

-- End of Section --

DIVISION 2 - SITE WORK

SECTION 02546

AGGREGATE SURFACING

TABLE OF CONTENTS

PART 1 GENERAL
1.1 SCOPE
1.2 QUALITY CONTROL
1.2.1 Subgrade
1.2.2 Materials
1.2.3 Placement
1.3 APPLICABLE PUBLICATIONS

PART 2 PRODUCTS
2.1 AGGREGATES
2.1.1 Coarse Aggregate
2.1.2 Fine Aggregate
2.1.3 Gradation
2.2 SAMPLING AND TESTING
2.2.1 General
2.2.2 Contractor Testing
2.2.3 Government Testing

PART 3 EXECUTION
3.1 CLEARING AND DEBRIS REMOVAL
3.2 USE OF HAUL ROADS
3.3 SUBGRADE
3.4 PLACEMENT
3.5 ROADWAY
3.6 MAINTENANCE

SECTION 02546

AGGREGATE SURFACING

PART 1 GENERAL

1.1 SCOPE

The work covered by this section consists of furnishing all plant, labor, materials, and equipment, and performing all operations necessary for preparation of the subgrade and construction of 6 inches of compacted aggregate surfacing upon the crown of the levee,

1.2 QUALITY CONTROL

The Contractor shall establish and maintain quality control for the work specified in this section to assure compliance with contract requirements and maintain records of his quality control for all construction operations including but not limited to the following:

1.2.1 Subgrade

Location, preparation.

1.2.2 Materials

Material delivered to the site shall conform to the specifications.

1.2.3 Placement

Width, thickness, distribution, compaction, final grading, and maintenance.

A copy of these records and tests, as well as the records of corrective action taken, shall be furnished the Government.

1.3 APPLICABLE PUBLICATIONS

The following publications of the issues listed below, but referred to elsewhere in this section by

basic designation only, form a part of the specification to the extent indicated by the references thereto:

AMERICAN SOCIETY OF TESTING AND MATERIALS (ASTM) PUBLICATIONS

D 422-63 (R 1990)	Particle-Size Analysis of Soils
D 4318-84	Liquid Limit, Plastic Limit, and Plasticity Index of Soils

ARKANSAS STATE HIGHWAY AND TRANSPORTATION DEPARTMENT

Standard Specifications for Highway Construction, Edition Of 1993

PART 2 PRODUCTS

2.1 AGGREGATES

Aggregate for surfacing shall be composed of sand-clay-gravel mixtures; gravel or stone screenings; crusher run coarse aggregate consisting of gravel or crushed stone with sand and binding material; or any combination of such materials which conforms to specified requirements. All material shall be free from organic matter and lumps or balls of clay. The material shall conform to the requirements as specified in 2.1.1 and 2.1.2 below, and shall conform to the gradation specified in 2.1.3 below as determined by ASTM D 422. All aggregate surfacing furnished under this contract shall comply favorably with representative samples as to quality, gradation, and moisture content.

2.1.1 Coarse Aggregate

Coarse aggregate is defined as aggregate retained on the No. 10 (2.00 mm) sieve. Coarse aggregate shall consist of hard, durable particles or fragments of stone or gravel. Materials that are soft, pliable, or subject to rapid deterioration when exposed to weathering shall not be used.

2.1.2 Fine Aggregate

Fine aggregate is defined as aggregate passing the No. 10 (2.00 mm) sieve. Fine aggregate shall consist of natural or crushed sand, and also shall include fine mineral particles passing the No. 200 (0.075 mm) sieve. The fraction of the material passing the No. 200 (0.075 mm) sieve shall be no more than two-thirds that of the fraction passing the No. 40 (0.425-mm) sieve. That portion of the aggregate passing the No. 40 (0.425 mm) sieve shall have a liquid limit of not more than 35 and a plasticity index of not less than 6 nor more than 15, as determined by ASTM D 4318. However if

crushed stone is utilized then the plasticity index shall be between 0 and 15.

2.1.3 Gradation

Aggregate resurfacing material shall conform to the following gradation when it is delivered to the job site and before it is placed on the roadway:

U.S. Standard Sieve	Permissible Limits Percentage by Weight, Passing
3"	100
1-1/2"	95-100
3/4"	65-100
3/8"	40-80
No. 4	30-60
No. 10	20-50
No. 40	15-35
No. 200	5-15

2.2 SAMPLING AND TESTING

2.2.1 General

Representative samples for testing of the material shall be taken by the Contractor under the supervision of the Contracting Officer. All costs of sampling and testing, except as specified in 2.2.3 below, shall be borne by the Contractor and no separate payment will be made therefor.

2.2.2 Contractor Testing

Prior to delivery of any material to the job site, the material shall be tested for compliance with the specifications by an approved independent testing laboratory. Such tests shall be performed before each 5,000 cubic yards of material is delivered to the job site under this contract, and in the event a noticeable change in the materials is observed during placement, such testing shall be performed at the direction of the Contracting Officer regardless of the quantity of material delivered. Certified results of the tests shall be submitted to the Contracting Officer for approval before the next 5,000 cubic yards of material is delivered to the job site. When a noticeable change is observed during placement of the material, samples shall be obtained from the delivery truck and a gradation test

shall be performed by the Contractor and COR. If this test fails to meet the requirements, then the questionable material shall be removed from the job site.

2.2.3 Government Testing

At the same time that samples for Contractor testing as specified in 2.2.2 above are taken, the Contractor shall take samples for assurance testing to be performed by and at the expense of the Government. The Contractor shall deliver such samples to Wynne Area Office, Bennie House Center Highway 1 North, P.O. Box 729, Wynne, Arkansas 72396-0729. Assurance testing requires approximately 5 days. Notice of assurance sample deliveries shall be given to the Contracting Officer's Representative prior to delivery.

PART 3 EXECUTION

3.1 CLEARING AND DEBRIS REMOVAL

All grass, weeds, sod, and other debris shall be cleared from the subgrade prior to gravel placement. Debris resulting from clearing operations shall be removed from the levee district right-of-way, in compliance with all Federal, State, and local laws. The side slopes shall be disturbed the least amount practicable, and shall be returned to a smooth slope upon completion of clearing and resurfacing operations.

3.2 USE OF HAUL ROADS

The Contractor shall acquaint himself with load limits and other regulations applicable to his use of public roads and/or highways for deliveries to be made under this contract and shall comply with all such load limits and regulations. Haul roads on the levee and its appurtenances that are used by the Contractor shall be maintained by him in a condition satisfactory for vehicular traffic. The Contractor shall not operate hauling equipment on the levee slopes except at ramps.

3.3 SUBGRADE

The subgrade shall be symmetrical about the centerline of the levee and shall be prepared as indicated on the drawings and so that drainage will occur each way from the centerline. Subgrade shall be graded and smooth. All potholes and ruts in the subgrade shall be repaired in advance of surfacing by removing any soft material in and/or adjacent to the potholes and ruts and by placing and compacting aggregate until the damaged area is restored to the same elevation as the surrounding undamaged road surface. The potholes and ruts shall be dry at the time of repair. All fill for the subgrade is to be compacted in accordance with the requirements of Section 02222, Paragraph 3.1.4.2.

3.4 PLACEMENT

(1) Aggregate shall be placed and spread upon the subgrade in the amount required to produce a pavement with width and compacted thickness as indicated on the drawings. The placement shall be commenced at the nearest point of delivery of the resurfacing material to a reach of levee and shall be carried continuously away from such point unless otherwise authorized by the Contracting Officer. Placing of aggregate will not be allowed when the roadway surface, in the opinion of the Contracting Officer, is too wet to place aggregate. No unspread aggregate shall be left in a piled condition overnight. Reaches of resurfacing which are no longer needed for haul roads for supplying the aggregate shall be graded and dressed to provide a slope each way from the centerline and then compacted by at least four passes of a pneumatic tired roller having tire pressure of 35 to 40 pounds per square inch and a gross weight of not less than 20,000 pounds or by other approved compacting equipment which will obtain comparable compaction. A pass of the roller shall consist of the completed coverage of the surface by the roller. The compaction passes of the roller shall not be performed when the material is so wet that it is displaced under the roller or when the material is too dry for proper bonding. In the event aggregate is hauled over rolled portions of the resurfacing, such portions shall subsequently be graded, dressed and rolled again as specified hereinabove at no additional cost to the Government. The resurfacing shall be maintained in an acceptable condition until acceptance.

(2) By the end of each workday, all aggregate surfacing hauled and placed on the levee roadway shall be spread and blended into the existing levee roadway surface as specified in subparagraph (1) above. At no time under this contract shall aggregate surfacing be dumped and left at the end of the workday without being placed as specified above.

3.5 ROADWAY

The roadway shall have a 6-inch compacted thickness aggregate surface 10 feet wide.

3.6 MAINTENANCE

The Contractor shall maintain the aggregate surfacing in a good and satisfactory condition until acceptance. The Contractor shall correct any deficiencies in width and thickness and shall remove, dispose of as described in paragraph 3.1 above, and replace, without additional compensation, any deficient material placed in the work.

-- End of Section --

DIVISION 2 - SITEWORK

SECTION 02720

STORM-DRAINAGE SYSTEM

TABLE OF CONTENTS

PART 1 GENERAL 1
1.1 REFERENCES 1
1.2 SUBMITTALS 1
1.3 DELIVERY, STORAGE, AND HANDLING 2
1.3.1 Delivery and Storage 2
1.3.2 Handling 2

PART 2 PRODUCTS 2
2.1 PIPE FOR CULVERTS 2
2.2 EXTERIOR PIPE JOINT COLLARS 3
2.3 PRECAST CONCRETE FLARED END SECTION (F.E.S.) 3

PART 3 EXECUTION 3
3.1 CULVERT INSTALLATION BY EXCAVATION 4
3.1.1 Excavation 3
3.1.2 Trenching 3
3.1.3 Removal of Unstable Material 4
3.2 BEDDING FOR CULVERTS 4
3.3 PLACING CULVERTS 4
3.4 JOINING PIPE 5
3.5 APPLICATION OF EXTERIOR JOINT COLLARS 5
3.6 BACKFILLING FOR CULVERTS 5
3.6.1 Backfilling Pipe in Trenches 5
3.6.1.1 Initial Backfill 5
3.6.1.2 Final Backfill 5
3.6.2 Movement of Construction Machinery 6
3.6.3 Compaction 6

SECTION 02720

STORM-DRAINAGE SYSTEM

PART 1 GENERAL

1.1 REFERENCES

The publications listed below form a part of this specification to the extent referenced. The publications are referred to in the text by basic designation only.

AMERICAN ASSOCIATION OF STATE HIGHWAY AND TRANSPORTATION OFFICIALS (AASHTO)

AASHTO M 170	(1993) Reinforced Concrete Culvert, Storm Drain, and Sewer Pipe
AASHTO M 198	(1993) Joint for Circular Concrete Sewer And Culvert Pipe Using Flexible Watertight Gaskets
AASHTO T 280	Concrete Pipe, Sections, or Tile

AMERICAN SOCIETY FOR TESTING AND MATERIALS (ASTM)

ASTM C 76	(1990) Reinforced Concrete Culvert Storm Drain; and Sewer Pipe
ASTM C 877-94	(1994) External Sealing Band for Noncircular Concrete Sewer, Storm Drain; and Culvert Pipe

1.2 SUBMITTALS

Government approval is required for submittals with a "GA" designation; submittals having an "FIO" designation are for information only. The following shall be submitted in accordance with Section 01330 SUBMITTAL PROCEDURES:

SD-06 Instructions

Placing Pipe; FIO.

Printed copies of the manufacturer's recommendations for installation procedures of the material being placed, prior to installation including collar installation procedures.

SD-08 Statements

Emergency Closure Plan; GA.

Statement of plan for emergency closure of the culvert in the event of imminent flooding of the construction site from river flooding.

SD-13 Certificates

Certificates for pipe, pipe gaskets, Flared End Sections

SD-14 Samples

Pipe for Culvert; FIO

Samples of the following materials before work is started; pipe gaskets and joint material, and exterior collar material.

1.3 DELIVERY, STORAGE, AND HANDLING

1.3.1 Delivery and Storage

Materials delivered to site shall be inspected for damage, unloaded, and stored with a minimum of handling. Materials shall not be stored directly on the ground. The inside of pipes and fittings shall be kept free of dirt and debris. Gasket materials, plastic materials, and exterior collars shall be protected from exposure to the direct sunlight over extended periods.

1.3.2 Handling

Materials shall be handled in such a manner as to ensure delivery to the trench in sound, undamaged condition. Pipe shall be carried to the trench, not dragged.

PART 2 PRODUCTS

2.1 PIPE FOR CULVERT

Pipe for culvert shall be of the sizes indicated on the plans and shall be specified herein.

Reinforced concrete pipe shall be ASTM C 76. Class IV. The concrete pipe shall be tongue and groove. Test shall be conducted according to AASHTO T 280.

The manufacture and furnishing of circular pipe shall be according to the provisions of AASHTO M 170 with a minimum B wall thickness. Joints shall be sealed with bitumen/butyl rubber plastic gaskets complying with AASHTO M 198, Type A or B, except that Type B shall have a Specific Gravity of 1.20 to 1.45.

2.2 EXTERIOR PIPE JOINT COLLARS

Exterior pipe joint collars shall be MacWrap Exterior Joint Sealer as manufactured by Mar-Mac Manufacturing Company or approved collars meeting ASTM Standards Specification C-877-94 (Type II). The collar shall be made of two layers. The bottom layer (adjacent to pipe) shall be made of a tough, woven polypropylene fabric with a thick rubberized mastic coating with a peelable protective paper that is removed when the collar is applied to the pipe. The outer layer shall consist of an impervious polyethylene with rubberized mastic that is bonded to the bottom layer. Between layers, steel straps sheathed in tubes shall be provided to allow the straps to slip freely and tighten around the pipe. The ends of the two layers shall be off-set to allow the bottom layer to overlap itself when applied to the pipe steel straps shall be completely covered by the top layer of collar.

2.3 PRECAST CONCRETE FLARED END SECTION (F.E.S.)

Precast concrete flared end section shall be of the size indicated on the plans and shall be specified herein. Precast concrete flared end section shall conform to the applicable requirements of AASHTO M-170 Class III, Wall B reinforced concrete pipe.

PART 3 EXECUTION

3.1 CULVERT INSTALLATION BY EXCAVATION

3.1.1 Excavation

For pipes installed by open cut, excavation of trenches and for appurtenances and backfilling for culverts and storm drains shall be in accordance with the applicable portions of Section 02221 EXCAVATION, Section 02222 BACKFILLS AND EMBANKMENTS, and the requirements specified below.

3.1.2 Trenching

Sheeting and bracing where required shall be placed within the trench width as specified. Care shall be taken not to over excavate. Where trench widths are exceeded, redesign with a resultant increase in cost of stronger pipe or special installation procedures shall be necessary. Cost of

this redesign and increased cost of pipe or installation shall be borne by the Contractor without additional cost to the Government.

3.1.3 Removal of Unstable Material

Where wet or otherwise unstable soil incapable of properly supporting the pipe, as determined by the Contracting Officer, is unexpectedly encountered in the bottom of a trench, such material shall be removed to the depth required and replaced to the proper grade with select granular material, compacted as provided in paragraph 3.6 BACKFILLING FOR CULVERTS. When removal of unstable material is due to the fault or neglect of the Contractor in his performance of shoring and sheeting, water removal, or other specified requirements, such removal and replacement shall be performed at no additional cost to the Government.

3.2 BEDDING FOR CULVERTS

The bedding surface for the pipe shall provide a firm foundation of uniform density throughout the entire length of the pipe. The bottom of the trench shall be shaped as shown on the plans to conform to the bottom of the pipe to afford a uniform firm bed. Selected granular material as shown on the contract documents shall be compacted with hand-held compaction devices.

3.3 PLACING CULVERTS

Each pipe shall be carefully examined before being laid, and defective or damaged pipe shall not be used. The pipe laying shall begin at the downstream end and the groove end of concrete pipe shall be placed facing upstream. Pipelines shall be laid to the grades and alignment indicated. Proper facilities shall be provided for lowering sections of pipe into trenches. Under no circumstances shall pipe be laid in water, and no pipe shall be laid when trench conditions or weather are unsuitable for such work. Diversion of drainage or dewatering of trenches during construction shall be provided as necessary. All pipe in place shall be inspected before backfilling, and those pipes damaged during placement shall be removed and replaced. Pipe that is not true in alignment or which shows settlement after laying shall be corrected by the Contractor at no additional cost to the Government.

3.4 JOINING PIPE

The method of joining pipe sections shall be such that the ends are fully entered and the inner surfaces are reasonably flush and even.

Pipe protruding through structure walls shall be cut off to integrate with sluice gate wall thimbles.

All surfaces on which joint seal gaskets may bear shall be smooth, free of spalls, cracks, fractures, and imperfections that would adversely affect the performance of the joint. A primer shall be applied if recommended by the manufacturer.

The following procedure shall be used for bitumen/butyl plastic gaskets,. The protective

wrapping shall be removed from one side of the gasket. The gasket shall be placed and pressed firmly to the surface of the pipe joint around the entire circumference of the joint. The remaining protective wrapping shall be removed and the pipe forced into connection until material fills the joint space.

To ensure an even and well-filled joint, the final joining of the pipe shall be accomplished by either pushing or pulling, by approved mechanical means, each joint of the pipe as it is laid. In cold weather, when directed, the joint material shall be warmed in a hot water bath, or by other approved methods, to the extent required to keep the material pliable for placement without breaking or cracking.

3.5 APPLICATION OF EXTERIOR JOINT COLLARS

All pipe joints shall be installed with an exterior pipe joint collar as specified in paragraph 2.4 EXTERIOR PIPE JOINT COLLAR and in accordance with manufacturer's recommendations.

After removing the protective paper, the band shall be placed around the pipe, mastic side to the pipe and spanning the joint, with the overlap at the top of the pipe. Steel straps shall be secured with proper tools. The closing flap shall cover all remaining exposed steel straps. Collar width shall correspond to type and size of pipe used.

3.6 BACKFILLING FOR CULVERTS

3.6.1 Backfilling Pipe in Trenches

3.6.1.1 Initial Backfill

After the pipe has been properly bedded, selected granular material or satisfactory material from excavation or borrow, at a moisture content that will facilitate compaction, shall be placed along both sides of pipe in layers not exceeding 6 inches in compacted depth. The backfill shall be brought up evenly on both sides of pipe for the full length of pipe. Care shall be taken to ensure thorough compaction of the fill under the haunches of the pipe. Each layer shall be thoroughly compacted with mechanical tampers or rammers. This method of filling and compacting shall continue until the fill has reached an elevation of at least 12 inches above the top of the pipe.

3.6.1.2 Final Backfill

The remainder of the trench shall be backfilled and compacted by spreading and rolling or compacted by mechanical rammers or tampers in layers not exceeding 6 inches. Tests for density will be made as necessary to ensure conformance to the compaction requirements as specified in Section 02222 BACKFILLS AND EMBANKMENTS. Where it is necessary in the opinion of the Contracting Officer, any sheeting or portions of bracing used shall be left in place and the contract will be adjusted accordingly. Untreated sheeting shall not be left in place beneath structures or pavements.

3.6.2 Movement of Construction Machinery

In compacting by rolling or operating heavy equipment parallel with the pipe, displacement of or injury to the pipe shall be avoided. Movement of construction machinery over a culvert or storm drain at any stage of construction shall be at the Contractor's risk. Any damaged pipe shall be repaired or replaced.

3.6.3 Compaction

Compaction of material shall be as specified in Section 02222 BACKFILLS AND EMBANKMENTS.

--End of Section--

DIVISION 2 - SITEWORK

SECTION 02935

TURF

TABLE OF CONTENTS

PART 1 GENERAL 1
1.1 REFERENCES 1
1.2 SUBMITTALS 1
1.3 DELIVERY, INSPECTION, STORAGE, AND HANDLING 3
1.3.1 Delivery 3
1.3.1.1 Topsoil 3
1.3.1.2 Soil Amendments 3
1.3.2 Inspection 3
1.3.3 Storage 3
1.3.4 Handling 3

PART 2 PRODUCTS 3
2.1 MATERIALS 3
2.1.1 Seed 3
2.1.1.1 Seed Classification 3
2.1.1.2 Seed Mixtures 4
2.1.1.3 Seed Quality 4
2.1.1.4 Seed Mixing 4
2.1.2 Soil Amendments 5
2.1.2.1 Lime 5
2.1.2.2 Fertilizer 5
2.1.2.3 Organic 5
2.1.2.4 Conditioner 6
2.1.3 Mulch 6
2.1.3.1 Straw 6
2.1.3.2 Hay 6
2.1.3.3 Wood Cellulose Fiber 6
2.1.3.4 Wood Chips 6
2.1.3.5 Paper Fiber Mulch 7
2.1.4 Asphalt Adhesive 7
2.1.4.1 Emulsified Asphalt 7
2.1.4.2 Cutback Asphalt 7
2.1.5 Water 7
2.1.6 Erosion Control Material 7
2.1.6.1 Soil Erosion Control Blanket 7
2.1.6.2 Soil Erosion Control Fabric 7
2.1.6.3 Soil Erosion Control Net 7
2.1.6.4 Soil Erosion Control Chemicals 7

2.1.6.5 Hydrophilic Colloids 8
2.1.6.6 Anchors 8

PART 3 EXECUTION 8
3.1 SEEDING 8
3.1.1 Turf Location 8
3.1.2 Seeding Time 8
3.2 SITE PREPARATION 8
3.2.1 Grading 8
3.2.2 Application of Soil Amendments 8
3.2.2.1 Soil Test 8
3.2.2.2 Lime 8
3.2.2.3 Fertilizer 9
3.2.2.4 Soil Conditioner 9
3.2.3 Tillage 9
3.2.3.1 Minimum Depth 9
3.2.4 Finished Grading 9
3.2.4.1 Preparation 9
3.2.4.2 Field Area Debris 9
3.2.4.3 Protection 9
3.3 SEEDING 9
3.3.1 General 10
3.3.2 Equipment Calibration 10
3.3.3 Applying Seed 10
3.3.3.1 Soil Test 10
3.3.3.2 Lime 10
3.3.3.3 Fertilizer 10
3.3.4 Rolling 10
3.3.5 Mulch 10
3.3.5.1 Straw or Hay Muclh 11
3.3.5.2 Mechanically Anchoring 11
3.3.5.3 Asphalt Adhesive Tackifier 11
3.3.5.4 Non-Asphaltic Tackifier 11
3.3.5.5 Spreading Asphalt Adhesive Coated Mulch 11
3.3.5.6 Wood Cellulose Fiber 11
3.3.6 Water 11
3.4 EROSION CONTROL 12
3.4.1 Erosion Control Material 12
3.4.2 Temporary Turf Cover 12
3.4.2.1 General 12
3.4.2.2 Application 12
3.5 RESTORATION AND CLEAN UP 12
3.5.1 Restoration 12
3.5.2 Clean Up 12
3.6 PROTECTION OF TURFED AREAS 12
3.7 TURF ESTABLISHMENT PERIOD 12
3.7.1 Commencement 12

3.7.2 Satisfactory Stand of Turf 13
3.7.3 Maintenance During Establishment Period 13
3.7.3.1 General 13
3.7.3.2 Watering 13
3.7.3.3 Post Fertilizer 13
3.7.3.4 Repair‘ 13
3.7.3.5 Maintenance Report 13
3.8 FINAL ACCEPTANCE 13
3.8.1 Preliminary Inspection 13
3.8.2 Final Inspection 14

SECTION 02935

TURF

PART 1 GENERAL

1.1 REFERENCES

The publications listed below form a part of this specification to the extent referenced. The publications are referred to in the text by basic designation only.

AGRICULTURAL MARKETING SERVICE (AMS)

AMS-01	(Amended thru: Aug 1988) Federal Seed Act Regulations (Part 201-202)

AMERICAN SOCIETY FOR TESTING AND MATERIALS (ASTM)

ASTM D 977	(1991) Emulsified Asphalt
ASTM D 2028	(1976; R 1992) Cutback Asphalt (Rapid-Curing Type)
ASTM D 2607	(1969) Peats, Mosses, Humus, and Related Products

COMMERCIAL ITEM DESCRIPTIONS (CID)

CID A-A-1909	(Basic; Notice 1) Fertilizer

1.2 SUBMITTALS

Government approval is required for submittals with a "GA" designation; submittals having an "FIO" designation are for information only. The following shall be submitted in accordance with Section 01330 SUBMITTAL PROCEDURES:

SD-01 Data

Manufacturer's Literature; FIO.

Manufacturer's literature discussing physical characteristics, application and installation instructions for erosion control material, and for chemical treatment material.

SD-07 Schedules

Equipment List; FIO.

A list of proposed, seeding and mulching equipment to be used in performance of turfing operation, including descriptive data and calibration tests.

SD-08 Statements

Delivery; GA.

Delivery schedule, at least 10 days prior to the intended date of the first delivery.

Maintenance Report;GA.

Written record of maintenance work performed.

Turf Establishment Period; FIO.

Written calendar time period for the turf establishment period.

SD-13 Certificates

Certificates of compliance certifying that materials meet the requirements specified, prior to the delivery of materials. Certified copies of the reports for the following materials shall be included:

Seed: GA.

For mixture, percent pure live seed, minimum percent germination and hard seed, maximum percent weed seed content, date tested and state certification.

Fertilizer; GA.

For chemical analysis, composition percent.

Agricultural Limestone; FIO.

For calcium carbonate equivalent and sieve analysis.

Peat; FIO.

For compliance with ASTM D 2607.

Asphalt Adhesive; FIO.

For compliance with ASTM D 977 and ASTM D 2028.

Topsoil; FIO.

For pH, particle size, chemical analysis and mechanical analysis.

1.3 DELIVERY, INSPECTION, STORAGE, AND HANDLING

1.3.1 Delivery

1.3.1.1 Topsoil

A soil test shall be provided for topsoil stockpiled at and delivered to the site.

1.3.1.2 Soil Amendments

Soil amendments shall be delivered to the site in the original, unopened containers bearing the manufacturer’s chemical analysis. In lieu of containers, soil amendments may be furnished in bulk. A chemical analysis shall be provided for bulk deliveries.

1.3.2 Inspection

Seed shall be inspected upon arrival at the job site by the Contracting Officer for conformity to type and quality in accordance with paragraph 2.1 MATERIALS. Other materials shall be inspected for meeting specified requirements and unacceptable materials shall be removed from the job site.

1.3.3 Storage

Materials shall be stored in areas designated by the Contracting Officer. Seed, lime and fertilizer shall be stored in cool, dry locations away from contaminants. Chemical treatment materials shall not be stored with other landscape materials.

1.3.4 Handling

Except for bulk deliveries, materials shall not be dropped or dumped from vehicles.

PART 2 PRODUCTS

2.1 MATERIALS

2.1.1 Seed

2.1.1.1 Seed Classification

State-approved seed of the latest season's crop shall be provided in original sealed packages bearing the producer's guaranteed analysis for percentages of mixture, purity, germination, hard seed, weed seed content, and inert material. Labels shall be in conformance with AMS-01 and applicable state seed laws.

2.1.1.2 Seed Mixtures

Seed mixtures shall be proportioned by weight as follows:

March 1 - June 15

Botanical Name	Common Name	Mixture Percent by Weight	Percent Pure Live Seed	Rate lbs/acre
Bermuda Grass (unhulled)	---	18.2	98%	10
Bermuda Grass (hulled)	---	9.1	98%	5
Lespedeza	Kobe	72.7	98%	35

June 16 - August 31

Botanical Name	Common Name	Mixture Percent by Weight	Percent Pure Live Seed	Rate lbs/acre
Bermuda Grass (unhulled)	---	40.0	98%	10
Bermuda Grass (hulled)	---	20.0	98%	5
Lespedeza	Kobe	40.0	98%	10

September 1 - February 28

Botanical Name	Common Name	Mixture Percent by Weight	Percent Pure Live Seed	Rate lbs/acre
Wheat	---	30.4	98%	30
Crimson Clover	Dixie	17.4	98%	20
Bermuda Grass (unhulled)	---	17.4	98%	20
Lespedeza	Kobe	34.8	98%	35

2.1.1.3 Seed Quality

Weed seed shall not exceed 1 percent by weight of the total mixture. Wet, moldy, or otherwise damaged seed shall be rejected.

2.1.1.4 Seed Mixing

The field mixing of seed shall be performed on site in the presence of the Contracting Officer.

2.1.2 Soil Amendments

Soil amendments shall consist of lime, fertilizer, organic soil amendments and soil conditioners meeting the following requirements.

2.1.2.1 Lime

Lime shall be agricultural limestone and shall have a minimum calcium carbonate equivalent of 90 percent and shall be ground to such a fineness that at least 90 percent will pass a 10-mesh sieve and at least 50 percent will pass a 60-mesh sieve.

2.1.2.2 Fertilizer

Fertilizer shall be commercial grade, free flowing, uniform in composition and conforming to CID A-A-1909. Granular Fertilizer: As recommended by the soil test.

2.1.2.3 Organic

a. Topsoil: The existing surface soil shall be stripped and stockpiled on the site in accordance with Section 02225 EARTHWORK paragraph 3.1 STRIPPING OF TOPSOIL. When required beyond that available from stripping, the topsoil shall be delivered. Delivered topsoil shall conform to topsoil requirements as specified in above reference paragraph, and shall be amended as recommended by soil test.

b. Peat: Peat moss derived from a bog, swampland or marsh shall conform to ASTM D 2607.

c. Sand: Clean, free of toxic materials; 95 percent by weight shall pass a No. 10 sieve and 10 percent by weight shall pass a No. 16 sieve.

d. Rotted Manure: Well rotted, horse or cattle manure containing a maximum 25 percent by volume of straw, sawdust, or other bedding materials, free of stones, sticks, soil and containing no chemicals or ingredients harmful to plants.

e. Decomposed Wood Derivatives: Ground bark, sawdust, or other wood waste material free of stones, sticks, soil, and toxic substances harmful to plants, stabilized with nitrogen and having the following properties:

Particle Size: Minimum percent by weight passing:

Sieve Size	Percent
No. 4	80

Nitrogen Content: Minimum percent based on dry weight:

Material	Percent
Redwood Sawdust	0.5
Fir Sawdust	0.7
Fir or Pine Bark	1.0

f. Calcined Clay: Granular particles produced from montmorillonite clay calcined to minimum temperature of 1200 degrees F to the following gradation: minimum 90 percent passing No. 8, 99 percent retained on No. 60 sieve and maximum 2 percent passing No. 100 sieve. Bulk density: maximum 40 pounds per cubic foot.

2.1.2.4 Conditioner

Soil conditioner shall be for single use or in combination to meet requirements for topsoil. Gypsum shall be commercially packaged, free flowing, minimum 95 percent calcium sulfate by volume.

2.1.3 Mulch

Mulch shall be free from weeds, mold, and other deleterious materials.

2.1.3.1 Straw

Straw shall be stalks from oats, wheat, rye, barley, or rice furnished in air-dry condition and with a consistency for placing with commercial mulch-blowing equipment.

2.1.3.2 Hay

Hay shall be native hay, sudan-grass hay, broomsedge hay, or other herbaceous mowings furnished in an air-dry condition suitable for placing with commercial mulch-blowing equipment.

2.1.3.3 Wood Cellulose Fiber

Wood cellulose fiber shall not contain any growth or germination-inhibiting factors and shall be dyed an appropriate color to facilitate visual metering during application. Composition on air-dry weight basis: 9 to 15 percent moisture, pH range from 4.5 to 6.0.

2.1.3.4 Wood Chips

Wood chips shall be chips or shredded bark with maximum particle size of 3/16 inch.

2.1.3.5 Paper Fiber Mulch

Paper fiber mulch shall be recycled news print that is shredded for the purpose of mulching seed.

2.1.4 Asphalt Adhesive

Asphalt adhesive shall conform to the following:

2.1.4.1 Emulsified Asphalt

Conforming to ASTM D 977, Grade SS-1.

2.1.4.2 Cutback Asphalt

Conforming to ASTM D 2028, designation RC-70.

2.1.5 Water

Water shall not contain elements toxic to plant life.

2.1.6 Erosion Control Material

Soil erosion control shall conform to the following:

2.1.6.1 Soil Erosion Control Blanket

Machine produced mat of wood excelsior formed from a web of interlocking wood fibers, covered on one side with either knitted straw blanket-like mat construction, covered with biodegradable plastic mesh, or interwoven biodegradable thread, plastic netting or twisted kraft paper cord netting.

2.1.6.2 Soil Erosion Control Fabric

Knitted construction of polypropylene yarn with uniform mesh openings 3/4 to 1 inch square with strips of biodegradable paper. Filler paper strips shall last 6 to 8 months.

2.1.6.3 Soil Erosion Control Net

Heavy, twisted jute mesh weighing approximately 1.22 pounds per yard and 4 feet wide with mesh openings of approximately 1 inch square.

2.1.6.4 Soil Erosion Control Chemicals

High-polymer synthetic resin or cold-water emulsion of selected petroleum resins.

2.1.6.5 Hydrophilic Colloids

Hydrophilic colloids shall be physiologically harmless to plant and animal life, without phytotoxic agents. Colloids shall be naturally occurring, silicate powder based, and shall form a water insoluble membrane after curing. Colloids must resist mold growth.

2.1.6.6 Anchors

Erosion control anchor material shall be as recommended by the manufacturer.

PART 3 EXECUTION

3.1 SEEDING

3.1.1 Turf Location

All locations identified on the contract drawings or in the specifications and as otherwise disturbed during construction, whether directly or incidentally disturbed, shall be turfed with the materials and in the manner described in these specifications. The areas to be turfed shall include any areas disturbed due the borrowing or disposal of materials for this construction.

3.1.2 Seeding Time

Seed shall be sown from March 1 to June 15 for spring, June 16 to August 31 for Summer, planting and from September 1 to February 28 for fall and winter planting.

3.2 SITE PREPARATION

3.2.1 Grading

The Contracting Officer shall verify that finished grades are as indicated on the contract drawings, and the placing of topsoil and the smooth grading has been completed in accordance with Section 02225 EARTHWORK paragraph 3.13 FINISHING.

3.2.2 Application of Soil Amendments

3.2.2.1 Soil Test

A soil test shall be performed for pH, chemical analysis and mechanical analysis to establish the quantities and type of soil amendments required to meet local growing conditions for the type and variety of turf specified.

3.2.2.2 Lime

Lime shall be applied at the rate recommended by the soil test. Lime shall be incorporated into the soil to a minimum depth of 4 inches or may be incorporated as part of the tillage operation.

3.2.2.3 Fertilizer

Fertilizer shall be applied at the rate recommended by the soil test. Fertilizer shall be incorporated into the soil to a minimum depth of 4 inches and may be incorporated as part of the tillage or hydroseeding operation.

3.2.2.4 Soil Conditioner

Soil Conditioner shall be spread uniformly over the soil to a minimum depth as determined by the soil test (3/8 inch) and thoroughly incorporated by tillage into the soil to a minimum depth of 4 inches.

3.2.3 Tillage

3.2.3.1 Minimum Depth

Soil on slopes flatter than 3-horizontal-to-1-vertical shall be tilled to a minimum depth of 4 inches. On slopes between 3-horizontal-to-1-vertical and 1-horizontal-to-1 vertical, the soil shall be tilled to a minimum depth of 2 inches by scarifying with heavy rakes, or other method. Rototillers shall be used where soil conditions and length of slope permit. On slopes 1-horizontal-to-1 vertical and steeper, no tillage is required.

3.2.4 Finished Grading

3.2.4.1 Preparation

Turf areas shall be filled as needed or have surplus soil removed to attain the finished grade. Drainage patterns shall be maintained as indicated on drawings. Turf areas compacted by construction operations shall be completely pulverized by tillage. Soil used for repair of erosion or grade deficiencies shall conform to topsoil requirements specified in Section 02225 EARTHWORK paragraph 3.1 STRIPPING OF TOPSOIL. Finished grade shall be 1 inch below the adjoining grade of any surfaced area. New surfaces shall be blended to existing areas.

3.2.4.2 Field Area Debris

Field areas shall have debris and stones larger than 3 inches in any dimension removed from the surface.

3.2.4.3 Protection

Finished graded areas shall be protected from damage by vehicular or pedestrian traffic and erosion.

3.3 SEEDING

3.3.1 General

Prior to seeding, any previously prepared seedbed areas compacted or damaged by interim rain, traffic or other cause, shall be reworked to restore the ground condition previously specified. Seeding operations shall not take place when the wind velocity will prevent uniform seed distribution.

3.3.2 Equipment Calibration

The equipment to be used and the methods of turfing shall be subject to the inspection and approval of the Contracting Officer prior to commencement of turfing operations. Immediately prior to the commencement of turfing operations, the Contractor shall conduct turfing equipment calibration tests in the presence of the Contracting Officer.

3.3.3 Applying Seed

3.3.3.1 Broadcast Seeding

Seed shall be uniformly broadcast at the rate stated in “Seed Mixtures” using broadcast seeders. Half of seed shall be broadcast in one direction, and the remainder at right angles to the first direction. Seed shall be covered to an average depth of 1/4 inch by disk harrow, steel mat drag, cultipacker, or other approved device.

3.3.3.2 Drill Seeding

Seed shall be uniformly drilled to an average depth of 1/2 inch at the rate and time as stated in “Seed Mixtures” using equipment having drills not more than 6-1/2 inches apart. Row markers shall be used with the drill seeder.

3.3.3.3 Hydroseeding

Seed and fertilizer shall be added to water and thoroughly mixed at the rates specified. Wood cellulose fiber mulch shall be added at the rates recommended by the manufacturer after the seed, fertilizer and water have been thoroughly mixed, to produce a homogeneous slurry. Slurry shall be uniformly applied under pressure over the entire area. The hydroseeded area shall not be rolled.

3.3.4 Rolling

Immediately after seeding, except for slopes 3-horizontal-to-1 vertical and greater, the entire area shall be firmed with a roller not exceeding 90 pounds for each foot of roller width. Areas seeded with seed drills equipped with rollers shall not be rolled.

3.3.5 Mulch

3.3.5.1 Straw or Hay Mulch

Straw or hay mulch shall be spread uniformly at the rate of 2 tons per acre. Mulch shall be spread by hand, blower-type mulch spreader or other approved method. Mulching shall be started on the windward side of relatively flat areas or on the upper part of a steep slope and continued uniformly until the area is covered. The mulch shall not be bunched. All seeded areas shall be mulched on the same day as the seeding.

3.3.5.2 Mechanically Anchoring

Immediately following spreading, the mulch shall be anchored to the soil by a V-type-wheel land packer, a scalloped-disk land packer designed to force mulch into the soil surface, or other suitable equipment.

3.3.5.3 Asphalt Adhesive Tackifier

When asphalt adhesive is applied to the in-place mulch, spraying shall be at the rate of between 10 to 13 gallons per 1000 square feet.

3.3.5.4 Non-Asphaltic Tackifier

Hydrophilic colloid shall be applied at rate recommended by manufacturer. Apply with hydraulic equipment suitable for mixing and applying uniform mixture of tackifier.

3.3.5.5 Spreading Asphalt Adhesive Coated Mulch

Straw or hay mulch shall be spread simultaneously with asphalt adhesive at the rate of 2 tons per acre by using power mulch equipment which shall be equipped with suitable asphalt pump and nozzle. The adhesive-coated mulch shall be applied evenly over the surface. Sunlight shall not be completely excluded from penetration to the ground surface.

3.3.5.6 Wood Cellulose Fiber

Wood cellulose fiber mulch for use with the hydraulic application of seed and fertilizer shall be applied as part of the hydroseeding operation.

3.3.6 Water

Watering shall be started within 7 days after completing the seeded area. Water shall be applied at a rate sufficient to ensure moist soil conditions to a minimum depth of 1 inch. Run-off and puddling shall be prevented.

3.4 EROSION CONTROL

3.4.1 Erosion Control Material

Erosion control material, where indicated or required, shall be installed in accordance with manufacturer's instructions. Placement of the erosion control material shall be accomplished without damage to installed material or without deviation to finished grade.

3.4.2 Temporary Turf Cover

3.4.2.1 General

When there are contract delays in the turfing operation or a quick cover is required to prevent erosion, the areas designated for turf shall be seeded with a temporary seed as directed by the Contracting Officer.

3.4.2.2 Application

When no other turfing materials have been applied, the quantity of one half of the required soil amendments shall be applied and the area tilled in accordance with paragraph 3.2 SITE PREPARATION. Seed shall be uniformly broadcast and applied at 1/2 the rate as stated in "Seed Mixtures" for the appropriate time. The area shall be watered as required.

3.5 RESTORATION AND CLEAN UP

3.5.1 Restoration

Existing turf areas, aggregate surface course areas and facilities that have been damaged from the turfing operation shall be restored to original condition at Contractor's expense.

3.5.2 Clean Up

Excess and waste material shall be removed from the planting operation and shall be disposed of off the site. Adjacent aggregate surface course areas shall be cleaned.

3.6 PROTECTION OF TURFED AREAS

Immediately after turfing, the area shall be protected against traffic or other use by erecting barricades and providing signage as required, or as directed by the Contracting Officer.

3.7 TURF ESTABLISHMENT PERIOD

3.7.1 Commencement

The Turf Establishment Period for establishing a healthy stand of turf shall begin on the first day of work under this contract and shall end three (3) months after the last day of turfing operations

required by this contract. Written calendar time period shall be furnished to the Contracting Officer for the Turf Establishment Period.

3.7.2 Satisfactory Stand of Turf

A satisfactory stand of turf from the seeding operation for a field area is defined as a minimum of 100 grass plants per 10 square foot. The total bare spots shall not exceed 2% per each square foot area.

3.7.3 Maintenance During Establishment Period

3.7.3.1 General

Maintenance of the turfed areas shall include eradicating weeds, eradicating insects and diseases, protecting embankments and ditches from erosion, maintaining erosion control materials and mulch, protecting turfed areas from traffic, mowing, watering, and post-fertilization.

3.7.3.2 Watering

Watering shall be at intervals to obtain a moist soil condition to a minimum depth of 1 inch. Frequency of watering and quantity of water shall be adjusted in accordance with the growth of the turf. Run-off, puddling and wilting shall be prevented.

3.7.3.3 Post-Fertilization

Nitrogen carrier fertilizer shall be applied at the rate shown as required by the soil test. The application shall be timed prior to the advent of winter dormancy and shall avoid excessively high nitrogen levels.

3.7.3.4 Repair

The Contractor shall re-establish as specified herein, eroded, damaged or barren areas. Mulch shall also be repaired or replaced as required.

3.7.3.5 Maintenance Report

A written record shall be furnished to the Contracting Officer of the maintenance work performed.

3.8 FINAL ACCEPTANCE

3.8.1 Preliminary Inspection

Prior to the completion of the Turf Establishment Period, a preliminary inspection shall be held by the Contracting Officer. The acceptability of the turf in accordance with the Turf Establishment Period shall be determined. An unacceptable stand of turf shall be repaired as

soon as turfing conditions permit.

3.8.2 Final Inspection

A final inspection shall be held by the Contracting Officer to determine that deficiencies noted in the preliminary inspection have been corrected. Time for the inspection shall be established in writing.

End of Section

DIVISION 3 - CONCRETE

SECTION 03101

FORMWORK FOR CONCRETE

TABLE OF CONTENTS

PART 1 GENERAL 1
1.1 REFERENCES 1
1.2 DESIGN REQUIREMENTS 1
1.3 SUBMITTALS 1
1.4 SHOP DRAWINGS 2

PART 2 PRODUCTS 2
2.1 MATERIALS 2
2.1.1 Forms and Form Liners 2
2.1.1.1 Class "B" Finish 3
2.1.1.2 Class "D" Finish 3
2.1.2 Form Coating 3
2.2 ACCESSORIES 3

PART 3 EXECUTION 3
3.1 INSTALLATION 3
3.1.1 Form Construction 3
3.1.2 Chamfering 4
3.1.3 Coating 4
3.2 FORM REMOVAL 4
3.2.1 Formwork Not Supporting Weight of Concrete 5
3.2.2 Formwork Supporting Weight of Concrete 5
3.3 INSPECTION 5

SECTION 03101

FORMWORK FOR CONCRETE

PART 1 GENERAL

1.1 REFERENCES

The publications listed below form a part of this specification to the extent referenced. The publications are referred to in the text by basic designation only.

AMERICAN CONCRETE INSTITUTE (ACI)

ACI 347R	(1994) Guide for Formwork for Concrete

AMERICAN SOCIETY FOR TESTING AND MATERIALS (ASTM)

ASTM C 31	(1991) Making and Curing Concrete Test Specimens in the Field
ASTM C 39	(1993a) Compressive Strength of Cylindrical Concrete Specimens
ASTM C 1077	(1995b) Standard Practice for Laboratories Testing Concrete and Concrete Aggregates for Use in Construction and Criteria for Laboratory Evaluation

1.2 DESIGN REQUIREMENTS

The design, engineering, and construction of the formwork shall be the responsibility of the Contractor. The formwork shall be designed for anticipated live and dead loads and shall comply with the tolerances specified in Section 03301 CAST-IN-PLACE STRUCTURAL CONCRETE paragraph 1.5 CONSTRUCTION TOLERANCES. However, for surfaces with an ACI Class A surface designation, the allowable deflection for facing material between studs, for studs between walers and walers between bracing shall be limited to 0.0025 times the span. The formwork shall be designed as a complete system with consideration given to the effects of cementitious materials and mixture additives such as fly ash, cement type, plasticizers, accelerators, retarders, air entrainment, and others. The adequacy of formwork design and construction shall be monitored prior to and during concrete placement as part of the Contractor's approved Quality Control Plan.

1.3 SUBMITTALS

Government approval is required for all submittals with a "GA" designation; submittals having

an "FIO" designation are for information only. The following shall be submitted in accordance with Section 01330 SUBMITTAL PROCEDURES:

SD-01 Data

Materials; FIO.

Manufacturer's literature shall be submitted for plywood, concrete form hard board, form accessories, prefabricated forms, form.

SD-04 Drawings

Shop Drawings;GA.

Drawings and design computations for all formwork required shall be submitted at least 14 days either before fabrication on site or before delivery of prefabricated forms.

SD-08 Statements

Shop Drawings; GA
If reshoring is permitted, the method, including location, order, and time of erection and removal shall also be submitted for review.

SD-09 Reports

Inspection;GA.

The Contractor shall submit field inspection reports for concrete forms and embedded items.

1.4 SHOP DRAWINGS

The shop drawings and data submitted shall include the type, size, quantity, and strength of all materials of which the forms are made, the plan for jointing of facing panels, details affecting the appearance, and the assumed design values and loading conditions.

PART 2 PRODUCTS

2.1 MATERIALS

2.1.1 Forms and Form Liners

Forms and form liners shall be fabricated with facing materials that will produce a finish meeting the specified construction tolerance requirements and the following surface classifications as defined in ACI 347R.

2.1.1.1 Class "B" Finish

This class of finish shall apply to all surfaces except those specified to receive Class D. The sheathing shall be composed of tongue-and-groove or shiplap lumber, plywood conforming to NBS Product Standard PS 1, grade B-B concrete form, tempered concrete form hardboard, or steel. Steel lining on wood sheathing will not be permitted.

2.1.1.2 Class “D” Finish

This class of finish shall apply to all surfaces against which backfill will be placed. The sheathing may be of wood or steel.

2.1.2 Form Coating

Form coating shall be commercial formulation that will not bond with, stain, cause deterioration, or any other damage to concrete surfaces. The coating shall not impair subsequent treatment of concrete surfaces depending upon bond or adhesion nor impede the wetting of surfaces to be cured with water or curing compounds. If special form liners are to be used, the Contractor shall follow the recommendation of the form coating manufacturer.

2.2 ACCESSORIES

Ties and other similar form accessories to be partially or wholly embedded in the concrete shall be of a commercially manufactured type. After the ends or end fasteners have been removed, the embedded portion of metal ties shall terminate not less than 2 inches from any concrete surface either exposed to view or exposed to water. Removable tie rods shall not be allowed. Plastic snap ties may be used in locations where the surface will not be exposed to view. Form ties shall be constructed so that the ends or end fasteners can be removed without spalling the concrete.

PART 3 EXECUTION

3.1 INSTALLATION

3.1.1 Form Construction

Forms shall be constructed true to the structural design and required alignment. The form surface and joints shall be mortar tight and supported to achieve safe performance during construction, concrete placement, and form removal. The Contractor shall continuously monitor the alignment and stability of the forms during all phases to assure the finished product will meet the required surface class specified in paragraph 2.1.1 Forms and Form Liners and tolerances specified in paragraph 1.2 DESIGN REQUIREMENTS. Failure of any supporting surface either due to surface texture, deflection or form collapse shall be the responsibility of the Contractor as will the replacement or correction of unsatisfactory surfaces. When forms for continuous surfaces are placed in successive units, care shall be taken to fit the forms over the completed surface to obtain accurate alignment of the surface and to prevent leakage of mortar. Forms shall

not be re-used if there is any evidence of defects which would impair the quality of the resulting concrete surface. All surfaces of used forms shall be cleaned of mortar and any other foreign material before reuse.

3.1.2 Chamfering

All exposed joints, edges and external corners shall be chamfered by molding placed in the forms unless the drawings specifically state that chamfering is to be omitted or as otherwise specified. Chamfered joints shall not be permitted where earth or rockfill is placed in contact with concrete surfaces. Chamfered joints shall be terminated 12 inches outside the limit of the earth or rockfill so that the end of the chamfers will be clearly visible.

3.1.3 Coating

Forms for exposed or painted surfaces shall be coated with form oil or a form-release agent before the form or reinforcement is placed in final position. The coating shall be used as recommended in the manufacturer's instructions. Forms for unexposed surfaces may be wet with water in lieu of coating immediately before placing concrete, except that, in cold weather when freezing temperatures are anticipated, coating shall be mandatory. Surplus coating on form surfaces and coating on reinforcing steel and construction joints shall be removed before placing concrete.

3.2 FORM REMOVAL

Forms shall not be removed without approval. The minimal time required for concrete to reach a strength adequate for removal of formwork without risking the safety of workers or the quality of the concrete depends on a number of factors including, but not limited to, ambient temperature, concrete lift heights, type and amount of concrete admixture, and type and amount of cementitious material in the concrete. It is the responsibility of the Contractor to consider all applicable factors and leave the forms in place until it is safe to remove them. In any case forms shall not be removed unless the minimum time or minimum compressive strength requirements below are met, except as otherwise directed or specifically authorized. When conditions are such as to justify the requirement, forms will be required to remain in place for a longer period. All removal shall be accomplished in a manner which will prevent damage to the concrete and ensure the complete safety of the structure. Where forms support more than one element, the forms shall not be removed until the form removal criteria are met by all supported elements. Form removal shall be scheduled so that all necessary repairs can be performed as specified in Section 03301 CAST-IN-PLACE STRUCTURAL CONCRETE, paragraph 3.5.3 Formed Surface Repair. Evidence that concrete has gained sufficient strength to permit removal of forms shall be determined by tests on control cylinders. All control cylinders shall be stored in the structure or as near the structure as possible so they receive the same curing conditions and protection methods as given those portions of the structure they represent. Control cylinders shall be removed from the molds at an age of no more than 24 hours. All control cylinders shall be prepared and tested in accordance with ASTM C 31 and ASTM C 39 at the expense of the Contractor by an independent laboratory that complies with ASTM C 1077 and shall be tested within 4 hours after removal from the site.

3.2.1 Formwork Not Supporting Weight of Concrete

All type formwork not supporting the weight of concrete shall not be removed in less than 24 hours after concrete placement is completed.

3.2.2 Formwork Supporting Weight of Concrete

Formwork supporting weight of concrete and shoring shall not be removed until structural members have acquired sufficient strength to safely support their own weight and any construction or other superimposed loads to which the supported concrete may be subjected. As a minimum, forms shall be left in place until control concrete test cylinders indicate evidence the concrete has attained at least 70 percent of the compressive strength required for the structure in accordance with the quality and location requirements of Section 03301 CAST-IN-PLACE STRUCTURAL CONCRETE.

3.3 INSPECTION

Forms and embedded items shall be inspected in sufficient time prior to each concrete placement by the Contractor in order to certify to the Contracting Officer that they are ready to receive concrete. The results of each inspection shall be reported in writing.

--End of Section--

DIVISION 3 - CONCRETE

SECTION 03210

STEEL BARS FOR CONCRETE REINFORCEMENT

TABLE OF CONTENTS

PART 1 GENERAL 1
1.1 REFERENCES 1
1.2 SUBMITTALS 1

PART 2 PRODUCTS 2
2.1 MATERIALS 2
2.1.1 Steel Bars 2
2.1.2 Accessories 2
2.1.2.1 Bar Supports 2
2.1.2.2 Wire Ties 2
2.2 TESTS, INSPECTIONS, AND VERIFICATIONS 3
2.2.1 Reinforcement Steel Tests 3

PART 3 EXECUTION 3
3.1 FABRICATION AND PLACEMENT 3
3.1.1 Hooks and Bends 3
3.1.2 Welding 3
3.1.3 Placing Tolerances 3
3.1.3.1 Spacing 3
3.1.3.2 Concrete Cover 4
3.1.4 Splicing 4
3.1.4.1 Lap Splices 4

SECTION 03210

STEEL BARS FOR CONCRETE REINFORCEMENT

PART 1 GENERAL

1.1 REFERENCES

The publications listed below form a part of this specification to the extent referenced. The publications are referred to in the text by basic designation only.

AMERICAN CONCRETE INSTITUTE (ACI)

ACI 315	(1995) ACI Detailing Manual: Section Details and Detailing of Concrete Reinforcement
ACI 318M/318RM	(1995) Building Code Requirements for Reinforced Concrete (Metric)

AMERICAN SOCIETY FOR TESTING AND MATERIALS (ASTM)

ASTM A 370	(1995a) Mechanical Testing of Steel Products
ASTM A 615/A 615M	(1996a) Deformed and Plain Billet-Steel Bars for Concrete Reinforcement

AMERICAN WELDING SOCIETY (AWS)

AWS D1.4	(1992) Structural Welding Code - Reinforcing Steel

1.2 SUBMITTALS

Government approval is required for all submittals with a "GA" designation; submittals having an "FIO" designation are for information only. The following shall be submitted in accordance with Section 01330 SUBMITTAL PROCEDURES:

SD-04 Drawings

Fabrication and Placement; GA

The Contractor shall submit shop drawings which include: reinforcement steel placement drawings; reinforcement steel schedules showing quantity, size, shape, dimensions, weight per

meter (foot), total weights and bending details; and details of bar supports showing types, sizes, spacing and sequence.

SD-09 Reports

Materials; FIO. Tests, Inspections, and Verifications; FIO.

Certified tests reports of reinforcement steel showing that the steel complies with the applicable specifications shall be furnished for each steel shipment and identified with specific lots prior to placement. Three copies of the heat analyses shall be provided for each lot of steel furnished and the Contractor shall certify that the steel conforms to the heat analyses.

SD-18 Records

Materials; FIO

A system of identification which shows the disposition of specific lots of approved materials in the work shall be established and submitted before completion of the contract.

PART 2 PRODUCTS

2.1 MATERIALS

Material shall conform to the following requirements.

2.1.1 Steel Bars

Steel bars shall comply with the requirements of ASTM A 615/A 615M-96a deformed, and shall be Grade 400.

2.1.2 Accessories

2.1.2.1 Bar Supports

Bar supports shall comply with the requirements of ACI 315. Supports for bars in concrete with formed surfaces exposed to view or to be painted shall be plastic-coated wire, stainless steel or precast concrete supports. Precast concrete supports shall be wedged-shaped, not larger than 3 ½ by 3 ½ inches, of thickness equal to that indicated for concrete cover and have an embedded hooked tie-wire for anchorage. Bar supports used in precast concrete with formed surfaces exposed to view shall be the same quality, texture and color as the finish surfaces.

2.1.2.2 Wire Ties

Wire ties shall be 16 gage or heavier black annealed wire.

2.2 TESTS, INSPECTIONS, AND VERIFICATIONS

The Contractor shall have material tests required by applicable standards performed by an approved laboratory and certified to demonstrate that the materials are in conformance with the specifications. Test, inspections, and verifications shall be performed and certified at the Contractor's expense.

2.2.1 Reinforcement Steel Tests

Mechanical testing of steel shall be in accordance with ASTM A 370 except as otherwise specified or required by the material specifications. Tension tests shall be performed on full cross-section specimens using a gage length that spans the extremities of specimens with welds or sleeves included. Chemical analyses of steel heats shall show the percentages of carbon, phosphorous, manganese, sulphur and silicon present in the steel.

PART 3 EXECUTION

3.1 FABRICATION AND PLACEMENT

Reinforcement steel and accessories shall be fabricated and placed as specified or shown on approved shop drawings. Fabrication and placement details of steel and accessories not specified or shown shall be in accordance with ACI 315 and ACI 318M/318RM (ACI 318/318R) or as directed. Steel shall be fabricated to shapes and dimensions shown, placed where indicated within specified tolerances and adequately supported during concrete placement. At the time of concrete placement all steel shall be free from loose, flaky rust, scale (except tight mill scale), mud, oil, grease or any other coating that might reduce the bond with the concrete.

Reinforcing bars shall be installed using equipment recommended by the manufacturer following manufacturer's instructions.

3.1.1 Hooks and Bends

Steel bars shall be mill or field-bent. All steel shall be bent cold unless otherwise authorized. No steel bars shall be bent after being partially embedded in concrete unless indicated or authorized.

3.1.2 Welding

Welding of steel bars will be permitted only where indicated or authorized. Welding shall be performed in accordance with AWS D1.4 except where otherwise specified or indicated.

3.1.3 Placing Tolerances

3.1.3.1 Spacing

The spacing between adjacent bars and the distance between layers of bars may not vary from the indicated position by more than one bar diameter nor more than 1 inch.

3.1.3.2 Concrete Cover

The minimum concrete cover of main reinforcement steel bars shall be as shown. The allowable variation for minimum cover shall be as follows:

MINIMUM COVER	VARIATION
6 inches	plus 1/2 inch
4 inches	plus 3/8 inch
3 inches	plus 3/8 inch
2 inches	plus 1/4 inch
1 1/2 inches	plus 1/4 inch
1 inch	plus 1/8 inch
3/4 inches	plus 1/8 inch

3.1.4 Splicing

Splices in steel bars shall be made only as required. Bars may be spliced at alternate or additional locations at no additional cost to the Government subject to approval.

3.1.4.1 Lap Splices

Lap splices shall be used only for bars smaller than size 14. Lapped bars may be placed in contact and securely tied or spaced transversely apart to permit the embedment of the entire surface of each bar in concrete. Lapped bars shall not be spaced farther apart than 1/5 the required length of lap or 6 inches.

End of Section

DIVISION 3 - CONCRETE

SECTION 03301

CAST-IN-PLACE STRUCTURAL CONCRETE

TABLE OF CONTENTS

PART 1 GENERAL 1
1.1 REFERENCES 1
1.2 SUBMITTALS 3
1.3 CONTRACTOR TESTING AND SAMPLING 6
1.3.1 Preconstruction Sampling and Testing 6
1.3.1.1 Aggregates 6
1.3.1.2 Cementitious Materials, Admixtures, and Curing Compound 6
1.3.2 Construction Testing by the Contractor 7
1.3.3 Chemical Admixtures Storage 7
1.4 DESIGN REQUIREMENTS 7
1.4.1 Concrete Strength 7
1.4.2 Maximum Water-Cement (W/C) Ratio 7
1.5 CONSTRUCTION TOLERANCES 7
1.5.1 General 7
1.5.2 Appearance 10

PART 2 PRODUCTS 10
2.1 MATERIALS 10
2.1.1 Cementitious Materials 10
2.1.1.1 Portland Cement 10
2.1.1.2 High-Early-Strength Portland Cement 10
2.1.2 Aggregates 10
2.1.2.1 General 10
2.1.2.2 Quality 10
2.1.3 Chemical Admixtures 11
2.1.3.1 Air-Entraining Admixture 11
2.1.3.2 Accelerating Admixture 11
2.1.3.3 Water-Reducing or Retarding Admixture 11
2.1.4 Curing Materials 11
2.1.4.1 Impervious-Sheet Curing Materials 11
2.1.4.2 Membrane-Forming Curing Compound 11
2.1.4.3 Burlap 12
2.1.5 Water 12
2.1.6 Nonshrink Grout 12
2.1.7 Latex Bonding Compound 12
2.2 CONCRETE MIXTURE PROPORTIONING 12
2.2.1 Quality of Mixture 12
2.2.2 Nominal Maximum-Size Coarse Aggregate 12

2.2.3 Air Content ... 12
2.2.4 Slump ... 13
2.2.5 Concrete Proportioning ... 13
2.2.6 Required Average Compressive Strength ... 13
2.2.6.1 Average Compressive Strength from Test Records ... 13
2.2.6.2 Average Compressive Strength without Previous Test Records ... 14
2.3 EXPANSION, CONTRACTION, AND CONSTRUCTION JOINTS IN CONCRETE ... 14
2.3.1 Premolded Expansion Joint Filler Strips ... 14
2.3.2 Field Molded Sealants ... 15

PART 3 EXECUTION ... 15
3.1 EQUIPMENT ... 15
3.1.1 Truck Mixers ... 15
3.1.2 Conveying Equipment ... 15
3.1.2.1 Buckets ... 15
3.1.2.2 Trucks ... 15
3.1.2.3 Chutes ... 16
3.1.3 Vibrators ... 16
3.2 PREPARATION FOR PLACING ... 16
3.2.1 Embedded Items ... 16
3.2.2 Concrete on Earth Foundations ... 16
3.2.3 Construction Joint Treatment ... 16
3.2.3.1 Joint Preparation ... 16
3.2.3.2 Air-Water Cutting ... 17
3.2.3.3 High-Pressure Water Jet ... 17
3.2.3.4 Wet Sandblasting ... 17
3.2.3.5 Waste Disposal ... 17
3.3 PLACING ... 17
3.3.1 Placing Procedures ... 18
3.3.2 Time Interval Between Mixing and Placing ... 18
3.3.3 Cold-Weather Placing ... 18
3.3.4 Hot-Weather Placing ... 18
3.3.5 Consolidation ... 19
3.4 EXPANSION, CONTRACTION AND CONSTRUCTION JOINTS IN CONCRETE ... 19
3.4.1 Expansion Joints ... 19
3.4.1.1 Joints With Field-Molded Sealant ... 19
3.5 FINISHING ... 20
3.5.1 Unformed Surfaces ... 20
3.5.1.1 Float Finish ... 20
3.5.1.2 Trowel Finish ... 20
3.5.1.3 Broom Finish ... 20
3.5.2 Formed Surfaces ... 20
3.5.2.1 Grout-Cleaned Finish ... 21
3.5.3 Formed Surface Repair ... 21
3.5.3.1 Class B Finish ... 21
3.5.3.2 Class D Finish ... 21

3.5.3.3 Material and Procedure for Repairs 22
3.6 CURING AND PROTECTION 22
3.6.1 Duration 22
3.6.2 Moist Curing 23
3.6.3 Membrane-Forming Curing Compound 23
3.6.3.1 Pigmented Curing Compound 23
3.6.3.2 Nonpigmented Curing Compound 24
3.6.3.3 Application 24
3.6.4 Evaporation Retardant 24
3.6.5 Cold-Weather Curing and Protection 24
3.7 SETTING OF BASE PLATES AND BEARING PLATES 25
3.7.1 Setting of Plates 25
3.7.2 Nonshrink Grout Application 25
3.7.2.1 Mixing and Placing of Nonshrink Grout 25
3.7.2.2 Treatment of Exposed Surfaces 25
3.7.2.3 Curing 25
3.8 TESTS AND INSPECTIONS 26
3.8.1 General 26
3.8.2 Testing and Inspection Requirements 26
3.8.2.1 Concrete Strength 26
3.8.2.2 Concrete Mixture 27
3.8.2.3 Inspection Before Placing 29
3.8.2.4 Placing 29
3.8.2.5 Vibrators 30
3.8.2.6 Curing 30
3.8.2.7 Cold-Weather Protection and Sealed Insulation Curing 31
3.8.2.8 Cold-Weather Protection Corrective Action 31
3.8.3 Reports 31

SECTION 03301

CAST-IN-PLACE STRUCTURAL CONCRETE

PART 1 GENERAL

1.1 REFERENCES

The publications listed below form a part of this specification to the extent referenced. The publications are referred to in the text by basic designation only.

AMERICAN CONCRETE INSTITUTE (ACI)

ACI 117/117R	(1990; Errata) Standard Tolerances for Concrete Construction and Materials
ACI 211.1	(1991) Standard Practice for Selecting Proportions for Normal, Heavyweight, and Mass Concrete
ACI 214	(1977; R 1989) Evaluation of Strength Test Results of Concrete
ACI 305R	(1991) Hot Weather Concreting
ACI 318M/318RM	(1992) Building Code Requirements for Reinforced Concrete (Metric)

AMERICAN SOCIETY FOR TESTING AND MATERIALS (ASTM)

ASTM C 31	(1991) Making and Curing Concrete Test Specimens in the Field
ASTM C 39	(1994) Compressive Strength of Cylindrical Concrete Specimens
ASTM C 42	(1994) Obtaining and Testing Drilled Cores and Sawed Beams of Concrete
ASTM C 94	(1994) Ready-Mixed Concrete
ASTM C 143	(1990a) Slump of Hydraulic Cement Concrete
ASTM C 150	(1995) Portland Cement

ASTM C 171	(1992) Sheet Materials for Curing Concrete
ASTM C 172	(1990) Sampling Freshly Mixed Concrete
ASTM C 192	(1990a) Making and Curing Concrete Test Specimens in the Laboratory
ASTM C 231	(1991b) Air Content of Freshly Mixed Concrete by the Pressure Method
ASTM C 260	(1994) Air-Entraining Admixtures for Concrete
ASTM C 309	(1994) Liquid Membrane-Forming Compounds for Curing Concrete
ASTM C 494	(1992) Chemical Admixtures for Concrete
ASTM C 597	(1983; R 1991) Pulse Velocity Through Concrete
ASTM C 803	(1990) Penetration Resistance of Hardened Concrete
ASTM C 805	(1994) Rebound Number of Hardened Concrete
ASTM C 881	(1990) Epoxy-Resin-Base Bonding Systems for Concrete
ASTM C 1059	(1991) Latex Agents for Bonding Fresh to Hardened Concrete
ASTM C 1064	(1986; R 1993) Temperature of Freshly Mixed Portland Cement Concrete
ASTM C 1077	(1995b) Standard Practice for Laboratories Testing Concrete and Concrete Aggregates for Use in Construction and Criteria for Laboratory Evaluation
ASTM C 1107	(1991a) Packaged Dry, Hydraulic-Cement Grout (Nonshrink)

ASTM D 75	(1987; R 1992) Sampling Aggregates
ASTM E 1155	(1987) Determining Floor Flatness and Levelness Using the F-Number System
ASTM E 1155M	(1987) Determining Floor Flatness and Levelness Using the F-Number System (Metric)
ASTM D 1751	(1983; R 1991) Preformed Expansion Joint Filler for Concrete Paving and Structural Construction (Nonextruding and Resilient Bituminous Types)
ASTM D 1752	(1984; R 1996) Preformed Sponge Rubber and Cork Expansion Joint Fillers for Concrete Paving and Structural Construction

CORPS OF ENGINEERS (COE)

COE CRD-C 318	(1979) Cloth, Burlap, Jute (or Kenaf)
COE CRD-C 400	(1963) Requirements for Water for Use in Mixing or Curing Concrete
COE CRD-C 513	(1974) Corps of Engineers Specifications for Rubber Waterstops
COE CRD-C 521	(1979) Corps of Engineers Specifications For Concrete Vibrators
COE CRD-C 572	(1974) Corps of Engineers Specifications for Polyvinylchloride Waterstop

ARKANSAS STATE HIGHWAY AND TRANSPORTATION DEPARTMENT

Standard Specifications for Highway Construction, Edition Of 1993

1.2 SUBMITTALS

Government approval is required for all submittals with a "GA" designation; submittals having an "FIO" designation are for information only. The following shall be submitted in accordance with Section 01330 SUBMITTAL PROCEDURES.

SD-01 Data

Concrete Mixture Proportioning;GA..

Concrete mixture proportions shall be determined by the Contractor, in accordance with the requirements in paragraph 2.2 CONCRETE MIXTURE PROPORTIONING, and submitted for review. The concrete mixture quantities of all ingredients per cubic meter (yard) and nominal maximum coarse aggregate size that will be used in the manufacture of each quality of concrete shall be stated. Proportions shall indicate the mass of cement, when used, and water; the mass of aggregates in a saturated surface-dry condition; and the quantities of admixtures. The submission shall be accompanied by test reports from a laboratory complying with ASTM C 1077 which show that proportions thus selected will produce concrete of the qualities indicated. No substitution shall be made in the source or type of materials used in the work without additional tests to show that the quality of the new materials and concrete are satisfactory.

Conveying Equipment and Methods; FIO.

The conveying equipment and methods for transporting, handling, and depositing the concrete shall be submitted for review by the Contracting Officer for conformance with paragraph 3.1.2 Conveying Equipment.

Placing Equipment and Methods; FIO.

All placing equipment and methods shall be submitted for review by the Contracting Officer.

SD-08 Statements

Testing Technicians;GA. Concrete Construction Inspector; GA Waste Disposal, GA

The Contractor shall submit statements that the concrete testing technicians and inspectors meet the requirements of paragraph 3.8 TESTS AND INSPECTIONS, subparagraph 3.8.1 General.

Construction Joint Treatment; GA.

The method and equipment proposed for joint cleanup and waste disposal shall be submitted for review and approval for conformance with paragraph 3.2.3 Construction Joint Treatment.

Curing and Protection; GA.
The curing medium and methods to be used shall be submitted for review and approval for conformance with paragraph 3.6 CURING AND PROTECTION.

Cold-Weather Placing; GA.

If concrete is to be placed under cold-weather conditions, the proposed materials, methods, and protection meeting the requirements of paragraph 3.3.3 Cold-Weather Placing shall be submitted for approval.

Hot-Weather Placing; GA

If concrete is to be placed under hot-weather conditions, the proposed materials and methods, meeting the requirements of paragraph 3.3.4 Hot-Weather Placing and paragraph 3.5 FINISHING, shall be submitted for review and approval.

SD-09 Reports

Tests and Inspections;GA.

Test results and inspection reports shall be submitted daily and weekly as required in paragraph 3.8.3 Reports.

Premolded Expansion Joint Filler Strips;GA.

Certified manufacturer's test reports shall be provided for premolded expansion joint filler strips to verify compliance with applicable specification.

SD-08 Statement

Waste Disposal; GA.

SD-13 Certificates

Cementitious Materials; GA

Cement will be accepted on the basis of the manufacturer's certification of compliance, accompanied by mill test reports that materials meet the requirements of the specification under which they are furnished. Certification and mill test reports shall be from samples taken from the particular lot furnished. No cementitious materials shall be used until the Contracting Officer has given notice of acceptance. Cementitious materials will be subject to check testing from samples obtained at the source, at transfer points, or at the project site, as scheduled by the Contracting Officer, and such sampling will be by or under the supervision of the Government at its expense. Material not meeting specifications shall be promptly removed from the site of work.

Impervious-Sheet Curing Materials; FIO.

Impervious-Sheet Curing Materials shall be certified for compliance with all specification requirements.

Air-Entraining Admixture; FIO.

Air-Entraining Admixture shall be certified for compliance with all specification requirements.

Other Chemical Admixtures; FIO.

Other Chemical Admixtures shall be certified for compliance with all specification requirements.

Membrane-Forming Curing Compound; FIO.

Membrane-Forming Curing Compound shall be certified for compliance with all specification requirements.

Epoxy Resin; FIO. Latex Bonding Compound; FIO.

Epoxy Resin and Latex Bonding Compound shall be certified for compliance with all specification requirements.

Nonshrink Grout; FIO.

Descriptive literature of the Nonshrink Grout proposed for use shall be furnished together with a certificate from the manufacturer stating that it is suitable for the application or exposure for which it is being considered.

SD-14 Samples

Field Molded Sealant and Primer; GA

One gallon of field-molded sealant and one quart of primer (when primer is recommended by the sealant manufacturer) shall be provided for testing.

1.3 CONTRACTOR TESTING AND SAMPLING

The Contractor shall sample and test aggregates and concrete to determine compliance with the specifications. The Contractor shall provide facilities and labor as may be necessary for procurement of representative test samples. Samples of aggregates shall be obtained at the point of batching in accordance with ASTM D 75. Concrete shall be sampled in accordance with ASTM C 172.

1.3.1 Preconstruction Sampling and Testing

1.3.1.1 Aggregates

Samples from any source of coarse aggregate and any source of fine aggregate selected by the Contractor, consisting of not less than 150 pounds of each size coarse aggregate and 75 pounds of fine aggregate taken under the supervision of the Contracting Officer in accordance with COE CRD-C 100. Testing will be performed by and at the expense of the Contractor in accordance with the applicable COE CRD-C or ASTM test methods. If the Contractor selects more than one source for each aggregate size or selects a substitute source for any size aggregate after the original source was tested, the cost of that additional testing will be borne by the Contractor.

Tests to which aggregate may be subjected are listed in paragraph 2.1.2.2 Quality. The material from the proposed source shall meet the quality requirements of this paragraph.

1.3.1.2 Cementitious Materials, Admixtures, and Curing Compound

At least 60 days in advance of concrete placement, the Contractor shall notify the Contracting Officer of the sources for cementitious materials, admixtures, and curing compound, along with sampling location, brand name, type, and quantity to be used in the manufacture and/or curing of the concrete.

1.3.2 Construction Testing by the Contractor

Sampling and testing will be performed by the Contractor at the expense of the Contractor except as otherwise specified. No material shall be used if test results are not satisfactory.

1.3.3 Chemical Admixtures Storage

Chemical admixtures that have been in storage at the project site for longer than 6 months or that have been subjected to freezing shall be retested at the expense of the Contractor when directed by the Contracting Officer and shall be rejected if test results are not satisfactory. Chemical admixtures will be accepted based on compliance with the requirements of paragraph 2.1.3 Chemical Admixtures.

1.4 DESIGN REQUIREMENTS

1.4.1 Concrete Strength

Specified compressive strength f'c shall be 3,000 psi @ 28 days.

1.4.2 Maximum Water-Cement (W/C) Ratio

Maximum W/C shall be 0.45.

1.5 CONSTRUCTION TOLERANCES

1.5.1 General

The definitions of the terms used in the following tables shall be as defined in ACI 117/117R. Level and grade tolerance measurements of slabs shall be made as soon as possible after finishing. When forms or shoring are used, the measurements shall be made prior to removal. Tolerances are not cumulative. The most restrictive tolerance controls. Tolerances shall not extend the structure beyond legal boundaries. Except as specified otherwise, plus tolerance increases the amount or dimension to which it applies, or raises a level alignment, and minus tolerance decreases the amount or dimension to which it applies, or lowers a level alignment. A tolerance without sign means plus or minus. Where only one signed tolerance is specified, there is no limit in the other direction.

TOLERANCES FOR FOUNDATIONS

(1) Lateral alignment

Eccentricity measured from the center of gravity of footing as cast to the center of gravity as specified; 0.02 times width of footing in direction of misplacement but not more than ..... 2 in.

Supporting masonry construction ..... ½ in.

(2) Level alignment

Top of footings supporting masonry ..... ½ in.

Top of other footings ..... +1/2 in.
..... -2 in.

(3) Cross-sectional dimensions

Horizontal dimension of formed members ..... +2 in.
..... -1/2 in.

Horizontal dimensions of unformed members cast against soil

2 ft or less ..... +3 in.
..... -1/2 in.

Greater than 2 ft but less than 6 ft ..... +6 in.
..... -1/2 in.

Over 6 ft ..... +12 in.
..... -1/2 in.

Vertical dimension (thickness) ..... -5 percent

(4) Relative alignment

Slope of footing side and top surfaces with respect to the specified plane ..... 1 in. per 10 ft

TOLERANCE FOR FINISHED FORMED CONCRETE SURFACES

(1) Vertical alignment

Formed surfaces slope with respect to the specified plane

Vertical alignment of outside corner of exposed corner columns and control joint grooves in concrete exposed to view ..... ¼ in. in 10 ft

All other conditions ..... 3/8 in. in 10 ft

(2) Abrupt variation
The offset between concrete surfaces for the following classes of surface:
(For Class AHV, positive means raise of elevation in the direction of waterflow, negative means drop of elevation in the direction of waterflow)

*Class AHV, in the direction of waterflow ..... +0 in.
..... -1/8 in.
perpendicular to the direction of waterflow ..... 1/8 in.

Class A ..... 1/8 in.
Class B ..... 1/8 in.
Class C ..... 1/8 in.
Class D ..... 1 in.
*Includes any high-velocity (40 fps) waterflow on any surface.

(3) Gradual variation

Surface finish tolerances as measured by placing a freestanding (unleveled), 5-ft straightedge for plane surface or curved template for curved surface anywhere on the surface and allowing it to rest upon two high spots within 72 hr after concrete placement. The gap at any point between the straightedge or

template and the surface shall
not exceed:

*Class A (including Class AHV) ..... 1/8 in.
Class B ..... ¼ in.
Class C ..... ½ in.
Class D ..... 1 in.

*Includes any high-velocity (40 fps) waterflow on any surface.

1.5.2 Appearance

Permanently exposed surfaces shall be cleaned, if stained or otherwise discolored, by a method that does not harm the concrete and that is approved by the Contracting Officer.

PART 2 PRODUCTS

2.1 MATERIALS

2.1.1 Cementitious Materials

Cementitious materials shall be portland cement, and shall conform to appropriate specifications listed below. Use of cementitious materials in architectural concrete shall be restricted to one color, one source, and one type.

2.1.1.1 Portland Cement

ASTM C 150, Type I or II, except that the maximum amount of C3A in Type I cement shall be 15 percent low alkali when used with aggregates listed at the end of this section which require it. White portland cement shall meet the above requirements except that it may be Type I, Type II, or Type III low alkali. White Type III may be used only in specific areas of the structure, when approved in writing by the Contracting Officer.

2.1.1.2 High-Early-Strength Portland Cement

ASTM C 150, Type III, used only when specifically approved in writing.

2.1.2 Aggregates

2.1.2.1 General

Concrete aggregates may be furnished from any source capable of meeting the quality requirements as stated in paragraph Quality.

2.1.2.2 Quality

Aggregates delivered to the mixer shall meet the requirements of Arkansas Department of Transportation for course and fine aggregates.

2.1.3 Chemical Admixtures

Chemical admixtures to be used, when required or permitted, shall conform to the appropriate specification listed.

2.1.3.1 Air-Entraining Admixture

The air-entraining admixture shall conform to ASTM C 260 and shall consistently cause the concrete to have an air content in the specified ranges under field conditions.

2.1.3.2 Accelerating Admixture

Accelerators shall meet the requirements of ASTM C 494, Type C or E, except that calcium chloride or admixtures containing calcium chloride shall not be used.

2.1.3.3 Water-Reducing or Retarding Admixture

a. Water-Reducing or Retarding Admixtures: ASTM C 494, Type A, B, or D, except that the 6-month and 1-year compressive strength tests are waived.

b. High-Range Water Reducing Admixture: ASTM C 494, Type F or G except that the 6-month and 1-year strength requirements shall be waived. The admixture may be used only when approved by the Contracting Officer, such approval being contingent upon particular mixture control as described in the Contractor's Quality Control Plan.

2.1.4 Curing Materials

2.1.4.1 Impervious-Sheet Curing Materials

Impervious-sheet curing materials shall conform to ASTM C 171, type optional, except polyethylene film shall not be used.

2.1.4.2 Membrane-Forming Curing Compound

The membrane-forming curing compound shall conform to ASTM C 309, Type 1-D or 2, except a styrene acrylate or chlorinated rubber compound meeting Class B requirements shall be used for surfaces that are to be painted or are to receive bituminous roofing, or waterproofing, or floors that are to receive adhesive applications of resilient flooring. The curing compound selected shall be compatible with any subsequent paint, roofing, coating, or flooring specified. Nonpigmented compound shall contain a fugitive dye and shall have the reflective requirements in ASTM C 309 waived.

2.1.4.3 Burlap

Burlap used for curing shall conform to COE CRD-C 318.

2.1.5 Water

Water for mixing and curing shall be fresh, clean, potable, and free of injurious amounts of oil, acid, salt, or alkali, except that nonpotable water may be used if it meets the requirements of COE CRD-C 400.

2.1.6 Nonshrink Grout

Nonshrink grout shall conform to ASTM C 1107 and shall be a commercial formulation suitable for the application proposed.

2.1.7 Latex Bonding Compound

Latex bonding compound agents for bonding fresh to hardened concrete shall conform to ASTM C 1059.

2.1.8 Epoxy Resin

Epoxy Resin for use in repairs shall conform to ASTM C 881, Type III, Grade I or II.

2.2 CONCRETE MIXTURE PROPORTIONING

2.2.1 Quality of Mixture

For each portion of the structure, mixture proportions shall be selected so that the strength and W/C requirements listed in paragraph 1.4 DESIGN REQUIREMENTS are met.

2.2.2 Nominal Maximum-Size Coarse Aggregate

Nominal maximum-size coarse aggregate shall be 1 inch except 3/4 inch nominal maximum-size coarse aggregate shall be used when any of the following conditions exist: the narrowest dimension between sides of forms is less than 7 1/2 inches, the depth of the slab is less than 4 inches, or the minimum clear spacing between reinforcing is less than 2 1/4 inches.

2.2.3 Air Content

Air content as delivered to the forms and as determined by ASTM C 231 shall be between 4 and 7 percent except that when the nominal maximum-size coarse aggregate is 3/4 inch, it shall be between 4-1/2 and 7-1/2 percent.

2.2.4 Slump

The slump shall be determined in accordance with ASTM C 143 and shall be within the range of 1 to 4 inches.

2.2.5 Concrete Proportioning

Trial batches and testing requirements for various qualities of concrete specified shall be the responsibility of the Contractor. Samples of aggregates shall be obtained in accordance with the requirements of ASTM D 75. Samples of materials other than aggregate shall be representative of those proposed for the project and shall be accompanied by the manufacturer's test reports indicating compliance with applicable specified requirements. Trial mixtures having proportions, consistencies, and air content suitable for the work shall be made based on methodology described in ACI 211.1, using at least three different water-cement ratios, which will produce a range of strength encompassing those required for the work. Trial mixtures shall be proportioned for maximum permitted slump and air content with due consideration to the approved conveying and placement method. The temperature of concrete in each trial batch shall be reported. For each water-cement ratio, at least three test cylinders for each test age shall be made and cured in accordance with ASTM C 192. They shall be tested at 7 days and at the design age specified in paragraph 1.4 DESIGN REQUIREMENTS in accordance with ASTM C 39. From these test results, a curve will be plotted showing the relationship between water-cement ratio and strength.

2.2.6 Required Average Compressive Strength

In meeting the strength requirements specified in paragraph 1.4.1 Concrete Strength, the selected mixture proportion shall produce a required average compressive strength f'cr exceeding the specified strength f'c by the amount indicated below.

2.2.6.1 Average Compressive Strength from Test Records

Where a concrete production facility has test records, a standard deviation shall be established in accordance with the applicable provisions of ACI 214. Test records from which a standard deviation is calculated shall represent materials, quality control procedures, and conditions similar to those expected, shall represent concrete produced to meet a specified strength or strengths (f'c) within 1,000 psi of that specified for proposed work, and shall consist of at least 30 consecutive tests. A strength test shall be the average of the strengths of two cylinders made from the same sample of concrete and tested at 28 days or at another test age designated for determination of f'c.

Required average compressive strength f'cr used as the basis for selection of concrete proportions shall be the larger of the equations that follow using the standard deviation as determined above:

$$f'cr = f'c + 1.34S$$
$$f'cr = f'c + 2.33S - 3.45\ (500)$$

Where S = standard deviation

Where a concrete production facility does not have test records meeting the requirements above but does have a record based on 15 to 29 consecutive tests, a standard deviation shall be established as the product of the calculated standard deviation and a modification factor from the following table:

NUMBER OF TESTS*	MODIFICATION FACTOR FOR STANDARD DEVIATION Use tabulation in paragraph DETERMINING REQUIRED AVERAGE STRENGTH
less than 15	
15	1.16
20	1.08
25	1.03
30 or more	1.00

*Interpolate for intermediate numbers of tests.

2.2.6.2 Average Compressive Strength without Previous Test Records

When a concrete production facility does not have sufficient field strength test records for calculation of the standard deviation, the required average strength f’cr shall be determined as follows:

If the specified compressive strength f'c is less than 3,000 psi

f'cr = f'c + 1,000

If the specified compressive strength f'c is 3,000 to 5,000 psi

f'cr = f'c + 1,200

If the specified compressive strength f'c is over 5,000 psi

f'cr = f'c + 1,400

2.3 EXPANSION, CONTRACTION AND CONSTRUCTION JOINTS IN CONCRETE

2.3.1 Premolded Expansion Joint Filler Strips

Premolded expansion joint filler strips shall conform to ASTM D 1751 or ASTM D 1752, Type I, or resin impregnated fiberboard conforming to the physical requirements of ASTM D 1752.

2.3.2 Field Molded Sealants

Field molded sealants shall be semi-rigid epoxy joint filler - minimum 55 shore “D” hardness. Bond breaker material shall be polyethylene tape, coated paper, metal foil or similar type materials. The back-up material shall be compressible, nonshrink, nonreactive with sealant, and nonabsorptive material type such as extruded butyl or polychloroprene foam rubber.

PART 3 EXECUTION

3.1 EQUIPMENT

3.1.1 Truck Mixers

Truck mixers, the mixing of concrete therein, and concrete uniformity shall conform to the requirements of ASTM C 94. A truck mixer may be used either for complete mixing (transit-mixed) or to finish the partial mixing done in a stationary mixer (shrink-mixed). Each truck shall be equipped with two counters from which it will be possible to determine the number of revolutions at mixing speed and the number of revolutions at agitating speed.

3.1.2 Conveying Equipment

The conveying equipment shall conform to the following requirements.

3.1.2.1 Buckets

The interior hopper slope shall be not less than 58 degrees from the horizontal, the minimum dimension of the clear gate opening shall be at least five times the nominal maximum-size aggregate, and the area of the gate opening shall not be less than 2 sq. ft. The maximum dimension of the gate opening shall not be greater than twice the minimum dimension. The bucket gates shall be essentially grout tight when closed and may be manually, pneumatically, or hydraulically operated except that buckets larger than 2 cubic yards shall not be manually operated. The design of the bucket shall provide means for positive regulation of the amount and rate of deposit of concrete in each dumping position.

3.1.2.2 Trucks

Truck mixers operating at agitating speed or truck agitators used for transporting plant-mixed concrete shall conform to the requirements of ASTM C 94. Nonagitating equipment may be used for transporting plant-mixed concrete over a smooth road when the hauling time is less than 15 minutes. Bodies of nonagitating equipment shall be smooth, watertight, metal containers specifically designed to transport concrete, shaped with rounded corners to minimize segregation, and equipped with gates that will permit positive control of the discharge of the concrete.

3.1.2.3 Chutes

When concrete can be placed directly from a truck mixer, agitator, or nonagitating equipment, the chutes attached to this equipment by the manufacturer may be used. A discharge deflector shall be used when required by the Contracting Officer. Separate chutes and other similar equipment will not be permitted for conveying concrete.

3.1.3 Vibrators

Vibrators of the proper size, frequency, and amplitude shall be used for the type of work being performed in conformance with the following requirements:

APPLICATION	HEAD DIAMETER inches	FREQUENCY VPM	AMPLITUDE inches
Thin walls, beams, etc.	1 ¼ to 2 ½	9,000 to 13,500	0.02 to 0.04
General construction	2 to 3 ½	8,000 to 12,000	0.025 to 0.05

The frequency and amplitude shall be determined in accordance with COE CRD-C 521.

3.2 PREPARATION FOR PLACING

3.2.1 Embedded Items

Before placement of concrete, care shall be taken to determine that all embedded items are firmly and securely fastened in place as indicated on the drawings, or required. Embedded items shall be free of oil and other foreign matter such as loose coatings or rust, paint, and scale. The embedding of wood in concrete will be permitted only when specifically authorized or directed. Voids in sleeves, inserts, and anchor slots shall be filled temporarily with readily removable materials to prevent the entry of concrete into voids. Welding, including tack welding, will not be permitted on embedded metals within 2 feet of the surface of the concrete.

3.2.2 Concrete on Earth Foundations

Earth surfaces upon which concrete is to be placed shall be clean, damp, and free from debris, frost, ice, and standing or running water. Prior to placement of concrete, the earth foundation shall have been satisfactorily compacted in accordance with Section 02225 EARTHWORK, paragraph 3.5 BACKFILL.

3.2.3 Construction Joint Treatment

Construction joint treatment shall conform to the following requirements.

3.2.3.1 Joint Preparation

Concrete surfaces to which additional concrete is to be bonded shall be prepared for receiving

the next lift or adjacent concrete by cleaning with either air-water cutting, sandblasting, high-pressure water jet, or other approved method. Air-water cutting will not be permitted on formed surfaces or surfaces congested with reinforcing steel. Regardless of the method used, the resulting surfaces shall be free from all laitance and inferior concrete so that clean, well bonded coarse aggregate is exposed uniformly throughout the lift surface. The edges of the coarse aggregate shall not be undercut. The surface shall be washed clean again as the last operation prior to placing the next lift. There shall be no standing water on the surface upon which concrete is placed.

3.2.3.2 Air-Water Cutting

Air-water cutting of a construction joint shall be performed at the proper time and only on horizontal construction joints. The air pressure used in the jet shall be 90 to 110 psi, and the water pressure shall be just sufficient to bring the water into effective influence of the air pressure. When approved by the Contracting Officer, a retarder complying with the requirements of COE CRD-C 94 may be applied to the surface of the lift to prolong the period of time during which air-water cutting is effective. Prior to receiving approval, the Contractor shall furnish samples of the material to be used and shall demonstrate the method to be used in applications. After cutting, the surface shall be washed and rinsed as long as there is any trace of cloudiness of the wash water. Where necessary to remove accumulated laitance, coatings, stains, debris, and other foreign material, high-pressure water jet or sandblasting will be required as the last operation before placing the next lift.

3.2.3.3 High-Pressure Water Jet

A stream of water under a pressure of not less than 3,000 psi may be used for cleaning. Its use shall be delayed until the concrete is sufficiently hard so that only the surface skin or mortar is removed and there is no undercutting of coarse-aggregate particles. If the water jet is incapable of a satisfactory cleaning, the surface shall be cleaned by sandblasting.

3.2.3.4 Wet Sandblasting

This method may be used when the concrete has reached sufficient strength to prevent undercutting of the coarse aggregate particles. The surface of the concrete shall then be washed thoroughly to remove all loose materials.

3.2.3.5 Waste Disposal

The method used in disposing of waste water employed in cutting, washing, and rinsing of concrete surfaces shall be such that the waste water does not stain, discolor, or affect exposed surfaces of the structures, or damage the environment of the project area. The method of disposal shall be subject to approval.

3.3 PLACING

3.3.1 Placing Procedures

The surfaces of horizontal construction joints shall be kept continuously wet for the first 12 hours during the 24-hour period prior to placing concrete. Surfaces may be dampened immediately before placement if necessary. Concrete placement will not be permitted when, in the opinion of the Contracting Officer, weather conditions prevent proper placement and consolidation. Concrete shall be deposited as close as possible to its final position in the forms and, in so depositing, there shall be no vertical drop greater than 5 feet except where suitable equipment is provided to prevent segregation and where specifically authorized. Depositing of the concrete shall be so regulated that it may be effectively consolidated in horizontal layers 2 feet or less in thickness with a minimum of lateral movement. The amount deposited in each location shall be that which can be readily and thoroughly consolidated. Sufficient placing capacity shall be provided so that concrete placement can be kept plastic and free of cold joints while concrete is being placed. Concrete shall be placed by methods that will prevent segregation or loss of ingredients. Any concrete transferred from one conveying device to another shall be passed through a hopper that is conical in shape. The concrete shall not be dropped vertically more than 5 feet except where a properly designed and sized elephant truck with rigid drop chute bottom section is provided to prevent segregation and where specifically authorized. In no case will concrete be discharged to free-fall through reinforcing bars.

3.3.2 Time Interval Between Mixing and Placing

Concrete shall be placed within 30 minutes after discharge into nonagitating equipment. When concrete is truck-mixed or when a truck mixer or agitator is used for transporting concrete mixed by a concrete plant mixer, the concrete shall be delivered to the site of the work, and discharge shall be completed within 1-1/2 hours after introduction of the cement to the aggregates. When the length of haul makes it impossible to deliver truck-mixed concrete within these time limits, batching of cement and a portion of the mixing water shall be delayed until the truck mixer is at or near the construction site.

3.3.3 Cold-Weather Placing

When concrete is likely to be subjected to freezing temperatures before the expiration of the curing period, it shall be placed in accordance with procedures previously submitted in accordance with paragraph 1.2 SUBMITTALS. The ambient temperature of the space adjacent to the concrete placement and surfaces to receive concrete shall be above 32 degrees F. The placing temperature of the concrete having a minimum dimension less than 12 inches shall be between 55 to 75 degrees F when measured in accordance with ASTM C 1064. The placing temperature of the concrete having a minimum dimension greater than 12 inches shall be between 50 to 70 degrees F. Heating of the mixing water or aggregates will be required to regulate the concrete-placing temperatures. Materials entering the mixer shall be free from ice, snow, or frozen lumps. Salt, chemicals, or other materials shall not be mixed with the concrete to prevent freezing.

3.3.4 Hot-Weather Placing

Concrete shall be properly placed and finished with procedures previously submitted in accordance with paragraph 1.2 SUBMITTALS. The concrete-placing temperature shall not exceed 90 degrees F when measured in accordance with ASTM C 1064. Cooling of the mixing water and aggregates, or both, may be required to obtain an adequate placing temperature. A retarder meeting the requirements of paragraph 2.1.3.3 Water-Reducing Or Retarding Admixtures may be used to facilitate placing and finishing. Steel forms and reinforcement shall be cooled prior to concrete placement when steel temperatures are greater than 122 degrees F. Conveying and placing equipment shall be cooled if necessary to maintain proper concrete-placing temperature.

3.3.5 Consolidation

Immediately after placement, each layer of concrete, including flowing concrete, shall be consolidated by internal vibrating equipment. Vibrators shall not be used to transport concrete within the forms. Hand spading may be required, if necessary, with internal vibrating along formed surfaces permanently exposed to view. Form or surface vibrators shall not be used unless specifically approved. The vibrator shall be inserted vertically at uniform spacing over the entire area of placement. The distance between insertions shall be approximately 1-1/2 times the radius of action of the vibrator. The vibrator shall penetrate rapidly to the bottom of the layer and at least 6 inches into the preceding unhardened layer if such exists. It shall be held stationary until the concrete is consolidated and then withdrawn slowly.

3.4 EXPANSION, CONTRACTION AND CONSTRUCTION JOINTS IN CONCRETE

Joint locations and details, including materials and methods of installation of joint fillers and waterstops, shall be as specified, as shown, and as directed. In no case shall any fixed metal be continuous through an expansion or contraction joint unless otherwise shown.

3.4.1 Expansion Joints

Premolded filler strips shall have oiled wood strips secured to the top thereof and shall be accurately positioned and secured against displacement to clean, smooth concrete surfaces. The wood strips shall be slightly tapered, dressed and of the size required to install filler strips at the desired level below the finished concrete surface and to form the groove for the joint sealant or seals to the size shown. Material used to secure premolded fillers and wood strips to concrete shall not harm the concrete and shall be compatible with the joint sealant or seals. The wood strips shall not be removed until after the concrete curing period. The groove shall be thoroughly cleaned of all laitance, curing compound, foreign materials, and protrusions of hardened concrete and any dust, which shall be blown out of the groove with oil-free compressed air.

3.4.1.1 Joints With Field-Molded Sealant

Joints shall not be sealed when the sealant, air or concrete temperature is less than 40 degrees F. Immediately prior to installation of field molded sealant, the joint shall be cleaned of all debris and further cleaned using water, chemical solvents or other means as recommended by the sealant manufacturer. The joints shall be dry prior to filling with sealant. Bond breaker and

back-up material shall be installed where required. Joints shall be primed and filled flush with joint sealant in accordance with the manufacturer's recommendations.

3.5 FINISHING

The ambient temperature of spaces adjacent to surfaces being finished shall be not less than 40 degrees F. In hot weather when the rate of evaporation of surface moisture, as determined by use of Figure 2.1.5 of ACI 305R, may reasonably be expected to exceed 0.2 pounds per square feet per hour. Provisions for windbreaks, shading, fog spraying, or wet covering with a light-colored material shall be made in advance of placement, and such protective measures shall be taken as quickly as finishing operations will allow. All unformed surfaces that are not to be covered by additional concrete or backfill shall have a float finish. Additional finishing shall be as specified below and shall be true to the elevation shown in the drawings. Surfaces to receive additional concrete or backfill shall be brought to the elevation shown on the drawings and left true and regular. Exterior surfaces shall be sloped for drainage unless otherwise shown in the drawing or as directed. Joints shall be carefully made with a jointing or edging tool. The finished surfaces shall be protected from stains or abrasions. Grate tampers or jitterbugs shall not be used.

3.5.1 Unformed Surfaces

3.5.1.1 Float Finish

Surfaces shall be screeded and darbied or bullfloated to bring the surface to the required finish level with no coarse aggregate visible. No water, cement, or mortar shall be added to the surface during the finishing operation. The concrete, while still green but sufficiently hardened to bear a man's weight without deep imprint, shall be floated to a true and even plane. Floating may be performed by use of suitable hand floats or power-driven equipment. Hand floats shall be made of magnesium or aluminum.

3.5.1.2 Trowel Finish

Concrete surfaces shall be finished with a float finish, and after surface moisture has disappeared, the surface shall be troweled to a smooth, even, dense finish free from blemishes including trowel marks.

3.5.1.3 Broom Finish

A broom finish shall be applied to the gatewell work platform-walking surface. The concrete surface shall be finished with a float finish. The floated surface shall be broomed with a fiber-bristle brush in a direction transverse to that of the main traffic.

3.5.2 Formed Surfaces

Unless another finish is specified, surfaces shall be left with the texture imparted by the forms except that defective surfaces shall be repaired as described in paragraph 3.5.3 Formed Surface Repair. Forms shall not be reused if there is any evidence of surface wear or defects that would

impair the quality of the surface.

3.5.2.1 Grout-Cleaned Finish

All proposed above ground concrete surfaces except as specified elsewhere shall be given a grout-cleaned finish as described, as approved by the Contracting Officer and after all required curing, cleaning, and repairs have been completed. Surfaces to be grout-cleaned shall be moist cured for the required period of time before application of the grout-cleaned finish. Grout-cleaning shall be delayed until near the end of construction on all surfaces not to be painted in order to achieve uniformity of appearance and reduce the chance of discoloring caused by subsequent construction operations. The temperature of the air adjacent to the surface shall be not less than 40 degrees F for 24 hours prior to and 72 hours following the application of the finish. The finish for any area shall be completed in the same day, and the limits of a finished area shall be made at natural breaks in the finished surface. The surface to receive grout-cleaned finish shall be thoroughly wetted to prevent absorption of water from the grout but shall have no free water present. The surface shall then be coated with grout. The grout shall be applied as soon as the surface of the concrete approaches surface dryness and shall be vigorously and thoroughly rubbed over the area with clean burlap pads, cork floats or stones, so as to fill all voids. The grout shall be composed of one part portland cement as used on the project, to two parts by volume of well-graded sand passing a 600-µm (No. 30) sieve mixed with water to the consistency of thick paint. White portland cement shall be used for all or part of the cement as approved by the Contracting Officer to give the desired finish color. The applied coating shall be uniform, completely filling all pits, air bubbles, and surface voids. While the grout is still plastic, remove all excess grout by working the surface with a rubber float, burlap pad, or other means. Then, after the surface whitens from drying (about 30 minutes at normal temperature) rub vigorously with clean burlap pads. Immediately after rubbing is completed, the finished surface shall be continuously moist cured for 72 hours. Burlap pads used for this operation shall be burlap stretched tightly around a board to prevent dishing the mortar in the voids.

3.5.3 Formed Surface Repair

After removal of forms, all ridges, lips, and bulges on surfaces permanently exposed shall be removed. All repairs shall be completed within 48 hours after form removal.

3.5.3.1 Class B Finish

Surfaces listed in Section 03101 FORMWORK FOR CONCRETE and as shown to have a class B finish shall have surface defects repaired as follows: defective areas, voids, and honeycombs smaller than 16 square inches in area and less than 1/2 inch deep and bug holes exceeding 1/2 inch in diameter shall be chipped and filled with dry-packed mortar. Holes left by removal of tie rods shall be reamed and filled with dry-packed mortar as specified in paragraph 3.5.3.2 Material And Procedure For Repairs. Defective and unsound concrete areas larger than described shall be defined by ½ inch deep dovetailed saw cuts in a rectangular pattern with lines parallel to the formwork, the defective concrete removed by chipping, and the void repaired with replacement concrete. The prepared area shall be brush-coated with an epoxy resin meeting the requirements of paragraph 2.1.8 Epoxy Resin, a latex-bonding agent meeting the requirements of paragraph

2.1.7 Latex Bonding Compound. The void shall be filled with replacement concrete in accordance with paragraph 3.5.3.2 Material and Procedure for Repairs.

3.5.3.2 Class D Finish

Surfaces listed in Section 03101 FORMWORK FOR CONCRETE and as shown to have a class D finish shall have surface defects repaired as follows: defective areas, voids, and honeycombs greater than 48 square inches in area or more than 2 inches deep shall be defined by ½ inch dovetailed saw cuts in a rectangular pattern, the defective concrete removed by chipping and the void repaired with replacement concrete. The prepared area shall be brush-coated with an epoxy resin meeting the requirements of paragraph 2.1.8 Epoxy Resin, a latex bonding agent meeting the requirements of paragraph 2.1.7 Latex Bonding Compound, or a neat cement grout after dampening the area with water. The void shall be filled with replacement concrete in accordance with paragraph 3.5.3.2 Material and Procedure for Repairs.

3.5.3.3 Material and Procedure for Repairs

The cement used in the dry-packed mortar or replacement concrete shall be a blend of the cement used for production of project concrete and white portland cement properly proportioned so that the final color of the mortar or concrete will match adjacent concrete. Trial batches shall be used to determine the proportions required to match colors. Dry-packed mortar shall consist of one part cement to two and one-half parts fine aggregate. The fine aggregate shall be that used for production of project concrete. The mortar shall be remixed over a period of at least 30 minutes without addition of water until it obtains the stiffest consistency that will permit placing. Mortar shall be thoroughly compacted into the prepared void by tamping, rodding, ramming, etc. and struck off to match adjacent concrete. Replacement concrete shall be produced using project materials and shall be proportioned by the Contracting Officer. It shall be thoroughly compacted into the prepared void by internal vibration, tamping, rodding, ramming, etc. and shall be struck off and finished to match adjacent concrete. Forms shall be used to confine the concrete. If an expanding agent is used in the repair concrete, the repair shall be thoroughly confined on all sides including the top surface. Metal tools shall not be used to finish permanently exposed surfaces. The repaired areas shall be cured for 7 days. The temperature of the in situ concrete, adjacent air, and replacement mortar or concrete shall be above 40 degrees F during placement, finishing, and curing. Other methods and materials for repair may be used only when approved in writing by the Contracting Officer. Repairs of the so-called "plaster-type" will not be permitted.

3.6 CURING AND PROTECTION

3.6.1 Duration

The length of the curing period shall be determined by the type of cementitious material, as specified below. Concrete shall be cured by an approved method.

Type III portland cement 3 days
Portland cement when accelerator is used to achieve

high early strength.

Type I portland cement 7 days

Type II portland cement 14 days

Immediately after placement, concrete shall be protected from premature drying, extremes in temperatures, rapid temperature change, and mechanical damage. All materials and equipment needed for adequate curing and protection shall be available and at the placement site prior to the start of concrete placement. Concrete shall be protected from the damaging effects of rain for 12 hours and from flowing water for 14 days. No fire or excessive heat including welding shall be permitted near or in direct contact with concrete or concrete embedments at any time.

3.6.2 Moist Curing

Moist-cured concrete shall be maintained continuously, not periodically, wet for the entire curing period. If water or curing materials stain or discolor concrete surfaces that are to be permanently exposed, they shall be cleaned as required in paragraph 1.5.2 Appearance. Where wooden form sheathing is left in place during curing, the sheathing shall be kept wet at all times. Where steel forms are left in place during curing, the forms shall be carefully broken loose from the hardened concrete and curing water continuously applied into the void so as to continuously saturate the entire concrete surface. Horizontal surfaces may be moist cured by ponding, by covering with a minimum uniform thickness of 2 inches of continuously saturated sand, or by covering with saturated nonstaining burlap or cotton mats. Horizontal construction joints may be allowed to dry for 12 hours immediately prior to the placing of the following lift. Silica fume concrete, if used, shall be moist-cured. Curing of silica fume concrete shall start immediately after placement.

3.6.3 Membrane-Forming Curing Compound

Concrete may be cured with an approved membrane-forming curing compound in lieu of moist curing except that membrane curing will not be permitted on any surface to which a grout-cleaned finish is to be applied or other concrete is to be bonded, on any surface containing protruding steel reinforcement, on an abrasive aggregate finish, or any surface maintained at curing temperature by use of free steam. A styrene acrylate or chlorinated rubber compound may be used for surfaces that are to be painted or are to receive bituminous roofing or waterproofing, or for floors that are to receive adhesive applications of resilient flooring. The curing compound selected shall be compatible with any subsequent paint, roofing, waterproofing, or flooring specified.

3.6.3.1 Pigmented Curing Compound

A pigmented curing compound meeting the requirements of the above paragraph 3.6.3 Membrane-Forming Curing Compound may be used on surfaces that will not be exposed to view when the project is completed.

3.6.3.2 Nonpigmented Curing Compound

A nonpigmented curing compound containing a fugitive dye may be used on surfaces that will be exposed to view when the project is completed. Concrete cured with nonpigmented curing compound must be shaded from the sun for the first 3 days when the ambient temperature is 90 degrees F or higher.

3.6.3.3 Application

The curing compound shall be applied to formed surfaces immediately after the forms are removed and prior to any patching or other surface treatment except the cleaning of loose sand, mortar, and debris from the surface. The surfaces shall be thoroughly moistened with water, and the curing compound applied as soon as free water disappears. The curing compound shall be applied to unformed surfaces as soon as free water has disappeared and bleeding has stopped. The curing compound shall be applied in a two-coat continuous operation by approved motorized power-spraying equipment operating at a minimum pressure of 75 psi, at a uniform coverage of not more than 400 square feet per gallon for each coat, and the second coat shall be applied perpendicular to the first coat. Concrete surfaces that have been subjected to rainfall within 3 hours after curing compound has been applied shall be resprayed by the method and at the coverage specified. All concrete surfaces on which the curing compound has been applied shall be adequately protected for the duration of the entire curing period from pedestrian and vehicular traffic and from any other cause that will disrupt the continuity of the curing membrane.

3.6.4 Evaporation Retardant

The abutment concrete walking surfaces shall be cured using sheet material:

Sheet curing shall not be used on vertical or near-vertical surfaces. All surfaces shall be thoroughly wetted and be completely covered with waterproof paper or polyethylene-coated burlap having the burlap thoroughly water-saturated before placing. Covering shall be laid with light-colored side up. Covering shall be lapped not less than 12 inches and securely weighted down or shall be lapped not less than 4 inches and taped to form a continuous cover with completely closed joints. The sheet shall be weighted to prevent displacement so that it remains in contact with the concrete during the specified length of curing. Coverings shall be folded down over exposed edges of slabs and secured by approved means. Sheets shall be immediately repaired or replaced if tears or holes appear during the curing period.

3.6.5 Cold-Weather Curing and Protection

When the daily outdoor low temperature is less than 32 degrees F, the temperature of the concrete shall be maintained above 40 degrees F for the first 7 days after placing. In addition, during the period of protection removal, the air temperature adjacent to the concrete surfaces shall be controlled so that concrete near the surface will not be subjected to a temperature differential of more than 59 degrees F as determined by observation of ambient and concrete temperatures indicated by suitable temperature measuring devices furnished by the Contractor

and installed at locations as directed by the Government. The Contractor shall make the installation of the thermometers at such locations as may be directed.

3.7 SETTING OF BASE PLATES AND BEARING PLATES

3.7.1 Setting of Plates

After being plumbed and properly positioned, column base plates, bearing plates for beams and similar structural members, and machinery and equipment base plates shall be provided with full bearing with nonshrink grout. The space between the top of concrete or masonry-bearing surface and the bottom of the plate shall be approximately 1/24 of the width of the plate, but not less than 1/2 inches for plates less than 12 inches wide. Concrete surfaces shall be rough, clean, and free of oil, grease, and laitance, and they shall be damp. Metal surfaces shall be clean and free of oil, grease, and rust.

3.7.2 Nonshrink Grout Application

Nonshrink grout shall conform to the requirements of paragraph 2.1.6 Nonshrink Grout. Water content shall be the minimum that will provide a flowable mixture and fill the space to be grouted without segregation, bleeding, or reduction of strength.

3.7.2.1 Mixing and Placing of Nonshrink Grout

Mixing and placing shall be in conformance with the material manufacturer's instructions and as specified. Ingredients shall be thoroughly dry-mixed before adding water. After adding water, the batch shall be mixed for 3 minutes. Batches shall be of size to allow continuous placement of freshly mixed grout. Grout not used within 30 minutes after mixing shall be discarded. The space between the top of the concrete or masonry-bearing surface and the plate shall be filled solid with the grout. Forms shall be of wood or other equally suitable material for retaining the grout and shall be removed after the grout has set. If grade "A" grout as specified in ASTM C 1107 is used, all surfaces shall be formed to provide restraint. The placed grout shall be worked to eliminate voids; however, overworking and breakdown of the initial set shall be avoided. Grout shall not be retempered or subjected to vibration from any source. Where clearances are unusually small, placement shall be under pressure with a grout pump. Temperature of the grout, and of surfaces receiving the grout, shall be maintained at 65 to 85 degree F until after setting.

3.7.2.2 Treatment of Exposed Surfaces

The exposed surface of other types of nonshrink grout shall have a smooth, dense finish.

3.7.2.3 Curing

Grout and parge coats shall be cured in conformance with paragraph 3.6 CURING AND PROTECTION.

3.8 TESTS AND INSPECTIONS

Tests and inspections shall conform to the following requirements.

3.8.1 General

The Contractor shall perform the inspections and tests described below, and, based upon the results of these inspections and tests, he shall take the action required and submit reports as required. When, in the opinion of the Contracting Officer, the concreting operation is out of control, concrete placement shall cease. The laboratory performing the tests shall conform with ASTM C 1077. The individuals who sample and test concrete or the constituents of concrete as required in this specification shall have demonstrated a knowledge and ability to perform the necessary test procedures equivalent to the ACI minimum guidelines for certification of Concrete Field Testing Technicians, Grade I. The individuals who perform the inspection of concrete construction shall have demonstrated a knowledge and ability equivalent to the ACI minimum guidelines for certification of Concrete Construction Inspector, Level II. The Government will inspect the laboratory, equipment, and test procedures prior to start of concreting operations and at least once per year thereafter for conformance with ASTM C 1077.

3.8.2 Testing and Inspection Requirements

3.8.2.1 Concrete Strength

Compressive strength test specimens will be made by the Contractor and cured in accordance with ASTM C 31 and tested in accordance with ASTM C 39. The strength of the concrete will be considered satisfactory so long as the average of all sets of three consecutive test results equals or exceeds the specified compressive strength f'c and no individual test result falls below the specified strength f'c by more than 500 psi. A "test" is defined as the average of two companion cylinders, or if only one cylinder is tested, the results of the single cylinder test. Additional analysis or testing, including nondestructive testing, taking cores and/or load tests may be required at the Contractor's expense when the strength of the concrete in the structure is considered potentially deficient.

a. Investigation of Low-Strength Test Results - When any strength test of standard-cured test cylinders falls below the specified strength requirement by more than 500 psi or if tests of field-cured cylinders indicate deficiencies in protection and curing, steps shall be taken to assure that the load-carrying capacity of the structure is not jeopardized. Nondestructive testing in accordance with ASTM C 597, ASTM C 803, or ASTM C 805 may be permitted by the Contracting Officer to estimate the relative strengths at various locations in the structure as an aid in evaluating concrete strength in place or for selecting areas to be cored. Such tests shall not be used as a basis for acceptance or rejection.

b. Testing of Cores - When the strength of concrete in place is considered potentially deficient, cores shall be obtained and tested in accordance with ASTM C 42. At

least three representative cores shall be taken from each member or area of concrete in place that is considered potentially deficient. The location of cores will be determined by the Contracting Officer to least impair the performance of the structure. Concrete in the area represented by the core testing will be considered adequate if the average strength of the cores is equal to at least 85 percent of the specified strength requirement and if no single core is less than 75 percent of the specified strength requirement.

c. Load Tests - If the core tests are inconclusive or impractical to obtain or if structural analysis does not confirm the safety of the structure, load tests may be directed by the Contracting Officer in accordance with the requirements of ACI 318M/318RM. Concrete work evaluated by structural analysis or by results of a load test shall be corrected in a manner satisfactory to the Contacting Officer. All investigations, testing, load tests, and correction of deficiencies will be performed and approved by the Contracting Officer at the expense of the Contractor, except that if all concrete is in compliance with the plans and specifications, the cost of investigations, testing, and load tests will be at the expense of the Government.

3.8.2.2 Concrete Mixture

a. Air Content Testing - Air content tests shall be made when test specimens are prepared. In addition, at least two tests for air content shall be made on randomly selected batches of each separate concrete mixture produced during each 8-hour period of concrete production. Additional tests shall be made when excessive variation in workability is reported by the placing foreman or Government quality assurance representative. Tests shall be made in accordance with ASTM C 231. Test results shall be plotted on control charts that shall at all times be readily available to the Government. The Contractor’s quality control representatives shall keep copies of the current control charts in the field and results plotted as tests are made. When a single test result reaches either the upper or lower action limit a second test shall immediately be made. The results of the two tests shall be averaged and this average used as the air content of the batch to plot on both the control chart for air content and the control chart for range, and for determining the need for any remedial action. The result of each test, or average as noted in the previous sentence, shall be plotted on a separate chart for each mixture on which an "average line" is set at the midpoint of the specified air content range from paragraph 2.2.3 Air Content. An upper warning limit and a lower warning limit line shall be set 1.0 percentage point above and below the average line. An upper action limit and a lower action limit line shall be set 1.5 percentage points above and below the average line, respectively. The range between each two consecutive tests shall be plotted on a control chart for range where an upper warning limit is set at 2.0 percentage points and an upper action limit is set at 3.0 percentage points. Samples for air content may be taken at the mixer; however, the Contractor is responsible for delivering the concrete to the placement site at the stipulated air content. If the Contractor's materials or transportation methods cause air content loss between the mixer and the

placement, correlation samples shall be taken at the placement site as required by the Contracting Officer and the air content at the mixer controlled as directed.

b. Air Content Corrective Action - Whenever points on the control chart for percent air reach either warning limit, an adjustment shall immediately be made in the amount of air-entraining admixture batched. As soon as is practical after each adjustment, another test shall be made to verify the result of the adjustment. Whenever a point on the control chart range reaches the warning limit, the admixture dispenser shall be recalibrated to ensure that it is operating accurately and with good reproducibility. Whenever a point on either control chart reaches an action limit line, the air content shall be considered out of control and the concreting operation shall immediately be halted until the air content is under control. Additional air content tests shall be made when concreting is restarted. All this shall be at no extra cost to the Government.

c. Slump Testing - In addition to slump tests which shall be made when test specimens are fabricated, at least four slump tests shall be made on randomly selected batches in accordance with ASTM C 143 for each separate concrete mixture produced during each 8-hour or less period of concrete production each day. Also, additional tests shall be made when the placing foreman or Government's quality assurance representative reports excessive variation in workability. Test results shall be plotted on control charts that shall at all times be readily available to the Government. The Contractor's quality control representatives shall keep copies of the current control charts in the field and results plotted as tests are made. When a single slump test reaches or goes beyond either the upper or lower action limit, a second test shall immediately be made on the same batch of concrete. The results of the two tests shall be averaged and this average used as the slump of the batch to plot on both the control chart for percent air and the chart for range, and for determining the need for any remedial action. An upper warning limit shall be set at 1/2 inch below the maximum allowable slump on separate control charts for percent air used for each type of mixture as specified in paragraph 2.2.4 Slump, and an upper action limit line and lower action limit line shall be set at the maximum and minimum allowable slumps, respectively, as specified in the same paragraph. The range between each consecutive slump test for each type of mixture shall be plotted on a single control chart for range on which an upper action limit is set at 2 inches. Samples for slump shall be taken at the mixer, however, the Contractor is responsible for delivering the concrete to the placement site at the stipulated slump. If the Contractor's materials or transportation methods cause slump loss between mixer and the placement, correlation samples shall be taken at the placement site as required by the Contracting Officer and the slump at the mixer controlled as directed.

d. Slump Corrective Action - Whenever points on the control chart for slump reach the upper warning limit, an adjustment shall be immediately made in the batch weights of water and fine aggregate. The adjustments are to be made so that the

total water content does not exceed that amount allowed by the maximum W/C specified, based upon aggregates which are in a saturated surface-dry condition. When a single slump reaches the upper or lower action limit, no further concrete shall be delivered to the placing site until proper adjustments have been made. Immediately after each adjustment, another test shall be made to verify the correctness of the adjustment. Whenever two consecutive slump tests, made during a period when there was no adjustment of batch weights, produce a point on the control chart for range at or above the upper action limit, the concreting operation shall immediately be halted and the Contractor shall take appropriate steps to bring the slump under control. Also, additional slump tests shall be made as directed. All this shall be at no additional cost to the Government.

e. Temperature - The temperature of the concrete shall be measured when compressive strength specimens are fabricated. Measurement shall be in accordance with ASTM C 1064. The temperature shall be reported along with the compressive strength data.

f. Compressive-Strength Specimens - At least one set of test specimens shall be made each day on each different concrete mixture placed during the day. Additional sets of test cylinders shall be made, as directed by the Contracting Officer, when the mixture proportions are changed or when low strengths have been detected. A random sampling plan shall be developed by the Contractor and approved by the Contracting Officer prior to the start of construction. The plan shall assure that sampling is done in a completely random and unbiased manner. A set of test specimens for concrete with a 28-day specified strength per paragraph 1.4 DESIGN REQUIREMENTS shall consist of four cylinders, two to be tested at 7 days and two at 28 days. A set of test specimens for concrete with a 90-day strength per specified paragraph 1.4 DESIGN REQUIREMENTS shall consist of six cylinders, two tested at 7 days, two at 28 days, and two at 90 days. Test specimens shall be molded and cured in accordance with ASTM C 31 and tested in accordance with ASTM C 39. All compressive-strength tests shall be reported immediately to the Contracting Officer. Quality control charts shall be kept for individual strength tests, moving average for strength, and moving average for range for each mixture. The charts shall be similar to those found in ACI 214.

3.8.2.3 Inspection before Placing

The Contractor shall inspect foundation or construction joints, forms, and embedded items for quality in sufficient time prior to each concrete placement to certify to the Contracting Officer that they are ready to receive concrete. The results of each inspection shall be reported in writing.

3.8.2.4 Placing

a. Placing Inspection - The placing foreman shall supervise all placing operations,

shall determine that the correct quality of concrete or grout is placed in each location as directed and shall be responsible for measuring and recording concrete temperatures and ambient temperature hourly during placing operations, weather conditions, time of placement, volume placed, and method of placement.

b. Placing Corrective Action - The placing foreman shall not permit batching and placing to begin until he has verified that an adequate number of vibrators in working order and with competent operators are available. Placing shall not be continued if any pile of concrete is inadequately consolidated. If any batch of concrete fails to meet the temperature requirements, immediate steps shall be taken to improve temperature controls.

3.8.2.5 Vibrators

a. Vibrator Testing and Use - The frequency and amplitude of each vibrator shall be determined in accordance with COE CRD-C 521 prior to initial use and at least once a month when concrete is being placed. Additional tests shall be made as directed when a vibrator does not appear to be adequately consolidating the concrete. The frequency shall be determined at the same time the vibrator is operating in concrete with the tachometer held against the upper end of the vibrator head while almost submerged and just before the vibrator is withdrawn from the concrete. The amplitude shall be determined with the head vibrating in air. Two measurements shall be taken, one near the tip and another near the upper end of the vibrator head and these results averaged. The make, model, type, and size of the vibrator and frequency and amplitude results shall be reported in writing.

b. Vibrator Corrective Action - Any vibrator not meeting the requirements of paragraph 3.1.3 Vibrators shall be immediately removed from service and repaired or replaced.

3.8.2.6 Curing

a. Moist-Curing Inspections - At least once each shift, and once per day on nonwork days an inspection shall be made of all areas subject to moist curing. The surface moisture condition shall be noted and recorded.

b. Moist-Curing Corrective Action - When a daily inspection report lists an area of inadequate curing, immediate corrective action shall be taken, and the required curing period for such areas shall be extended by one (1) day.

c. Membrane-Curing Inspection - No curing compound shall be applied until the Contractor's authorized representative has verified that the compound is properly mixed and ready for spraying. At the end of each operation, he shall estimate the quantity of compound used by measurement of the container and the area of concrete surface covered and compute the rate of coverage in square meters per

liter (square feet per gallon). He shall note whether or not coverage is uniform.

d. Membrane-Curing Corrective Action - When the coverage rate of the curing compound is less than that specified or when the coverage is not uniform, the entire surface shall be sprayed again.

e. Sheet-Curing Inspection - At least once each shift and once per day on nonwork days, an inspection shall be made of all areas being cured using material sheets. The condition of the covering and the tightness of the laps and tapes shall be noted and recorded.

f. Sheet-Curing Corrective Action - When a daily inspection report lists any tears, holes, or laps or joints that are not completely closed, the tears and holes shall promptly be repaired or the sheets replaced, the joints closed, and the required curing period for those areas shall be extended by one (1) day.

3.8.2.7 Cold-Weather Protection and Sealed Insulation Curing

At least once each shift and once per day on nonwork days, an inspection shall be made of all areas subject to cold-weather protection. The protection system shall be inspected for holes, tears, unsealed joints, or other deficiencies that could result in damage to the concrete. Special attention shall be taken at edges, corners, and thin sections. Any deficiencies shall be noted, corrected, and reported.

3.8.2.8 Cold-Weather Protection Corrective Action

When a daily inspection report lists any holes, tears, unsealed joints, or other deficiencies, the deficiency shall be corrected immediately and the period of protection extended 1 day.

3.8.3 Reports

All results of tests or inspections conducted shall be reported informally as they are completed and in writing daily. A weekly report shall be prepared for the updating of control charts covering the entire period from the start of the construction season through the current week. During periods of cold-weather protection, reports of pertinent temperatures shall be made daily. These requirements do not relieve the Contractor of the obligation to report certain failures immediately as required in preceding paragraphs. Such reports of failures and the action taken shall be confirmed in writing in the routine reports. The Contracting Officer has the right to examine all test and inspection records.

End of Section

DIVISION 4 – MASONRY

(NOT USED)

DIVISION 5 - METALS

SECTION 05055

WELDING, STRUCTURAL

TABLE OF CONTENTS

PART 1 GENERAL 1
1.1 REFERENCES 1
1.2 DEFINITIONS 1
1.3 GENERAL REQUIREMENTS 1
1.4 SUBMITTALS 2
1.5 WELDING PROCEDURE QUALIFICATIONS 2
1.5.1 Previous Qualifications 2
1.5.2 Prequalified Procedures 3
1.5.3 Retests 3
1.6 WELDER, WELDING OPERATOR, AND TACKER QUALIFICATION 3
1.6.1 Previous Qualifications 3
1.6.2 Certificates 4
1.6.3 Renewal of Qualification 4
1.7 INSPECTOR QUALIFICATION 5
1.8 SYMBOLS 5
1.9 SAFETY 5

PART 2 PRODUCTS 5
2.1 WELDING EQUIPMENT AND MATERIALS 5

PART 3 EXECUTION 5
3.1 WELDING OPERATIONS 5
3.1.1 Requirements 5
3.1.2 Identification 5
3.2 QUALITY CONTROL 6
3.3 STANDARDS OF ACCEPTANCE 6
3.3.1 Nondestructive Examination 6
3.3.2 Destructive Tests 6
3.4 GOVERNMENT INSPECTION AND TESTING 6
3.5 CORRECTIONS AND REPAIRS 7

SECTION 05055

WELDING, STRUCTURAL

PART 1 GENERAL

1.1 REFERENCES

The publications listed below form a part of this specification to the extent referenced. The publications are referred to in the text by basic designation only.

AMERICAN INSTITUTE OF STEEL CONSTRUCTION (AISC)

AISC-04	(1989) Specification for Structural Steel Buildings - Allowable Stress Design, Plastic Design

AMERICAN SOCIETY FOR NONDESTRUCTIVE TESTING (ASNT)

ASNT-01	(1996) Recommended Practice SNT-TC-1A

AMERICAN WELDING SOCIETY (AWS)

AWS A2.4	(1993) Standard Symbols for Welding, Brazing and Nondestructive Examination
AWS A3.0	(1994) Standard Welding Terms and Definitions
AWS D1.1	(1994) Structural Welding Code - Steel
AWS Z49.1	(1994) Safety in Welding and Cutting and Allied Processes

1.2 DEFINITIONS

Definitions of welding terms shall be in accordance with AWS A3.0.

1.3 GENERAL REQUIREMENTS

The design of welded connections shall conform to AISC-04 unless otherwise indicated or specified. Material with welds will not be accepted unless the welding is specified or indicated on the drawings or otherwise approved. Welding shall be as specified in this section, except where additional requirements are shown on the drawings or are specified in other sections. Welding shall not be started until welding procedures, welders, welding operators, and tackers

have been qualified and the submittals approved by the Contracting Officer. Qualification testing shall be performed at or near the work site. Each Contractor performing welding shall maintain records of the test results obtained in welding procedure, welder, welding operator, and tacker performance qualifications.

1.4 SUBMITTALS

Government approval is required for submittals with a "GA" designation; submittals having an "FIO" designation are for information only. The following shall be submitted in accordance with Section 01330 SUBMITTAL PROCEDURES:

SD-08 Statements

Welding Procedure Qualifications; GA.

Welder, Welding Operator, and Tacker Qualification;GA.

Inspector Qualification; FIO.

Copies of the welding procedure specifications; the procedure qualification test records; and the welder, welding operator, or tacker qualification test records shall be furnished to the Contracting Officer.

SD-18 Records

Quality Control; GA.

A quality control plan and records of tests and inspections.

1.5 WELDING PROCEDURE QUALIFICATIONS

Except for prequalified (per AWS D1.1) and previously qualified procedures, each Contractor performing welding shall record in detail and shall qualify the welding procedure specification for any welding procedure followed in the fabrication of weldments. Qualification of welding procedures shall conform to AWS D1.1 and to the specifications in this section. Copies of the welding procedure specification and the results of the procedure qualification test for each type of welding which requires procedure qualification shall be submitted for approval. Approval of any procedure, however, will not relieve the Contractor of the sole responsibility for producing a finished structure meeting all the requirements of these specifications. This information shall be submitted on the forms in Appendix E of AWS D1.1. Welding procedure specifications shall be individually identified and shall be referenced on the detail drawings and erection drawings, or shall be suitably keyed to the contract drawings. In case of conflict between this specification and AWS D1.1, this specification governs.

1.5.1 Previous Qualifications

Welds shall be constructed to the type, location, size and length as shown in the contract documents. Welds shall be E73018 with a tensile strength of 20 ksi and elongation of 22% at 2 inches. Welding procedures previously qualified by test may be accepted for this contract without requalification if the following conditions are met:

a. Testing was performed by an approved testing laboratory, technical consultant, or the Contractor's approved quality control organization.

b. The qualified welding procedure conforms to the requirements of this specification and is applicable to welding conditions encountered under this contract.

c. The welder, welding operator, and tacker qualification tests conform to the requirements of this specification and are applicable to welding conditions encountered under this contract.

1.5.2 Prequalified Procedures

Welding procedures which are considered prequalified as specified in AWS D1.1 will be accepted without further qualification. The Contractor shall submit for approval a listing or an annotated drawing to indicate the joints not prequalified. Procedure qualification shall be required for these joints.

1.5.3 Retests

If welding procedure fails to meet the requirements of AWS D1.1, the procedure specification shall be revised and requalified, or at the Contractor's option, welding procedure may be retested in accordance with AWS D1.1. If the welding procedure is qualified through retesting, all test results, including those of test welds that failed to meet the requirements, shall be submitted with the welding procedure.

1.6 WELDER, WELDING OPERATOR, AND TACKER QUALIFICATION

Each welder, welding operator, and tacker assigned to work on this contract shall be qualified in accordance with the applicable requirements of AWS D1.1 and as specified in this section. Welders, welding operators, and tackers who make acceptable procedure qualification test welds will be considered qualified for the welding procedure used.

1.6.1 Previous Qualifications

At the discretion of the Contracting Officer, welders, welding operators, and tackers qualified by test within the previous 6 months may be accepted for this contract without requalification if all the following conditions are met:

a. Copies of the welding procedure specifications, the procedure qualification test records, and the welder, welding operator, and tacker qualification test records are

submitted and approved in accordance with the specified requirements for detail drawings.

b. Testing was performed by an approved testing laboratory, technical consultant, or the Contractor's approved quality control organization.

c. The previously qualified welding procedure conforms to the requirements of this specification and is applicable to welding conditions encountered under this contract.

d. The welder, welding operator, and tacker qualification tests conform to the requirements of this specification and are applicable to welding conditions encountered under this contract.

1.6.2 Certificates

Before assigning any welder, welding operator, or tacker to work under this contract, the Contractor shall submit the names of the welders, welding operators, and tackers to be employed, and certification that each individual is qualified as specified. The certification shall state the type of welding and positions for which the welder, welding operator, or tacker is qualified, the code and procedure under which the individual is qualified, the date qualified, and the name of the firm and person certifying the qualification tests. The certification shall be kept on file, and 3 copies shall be furnished. The certification shall be kept current for the duration of the contract.

1.6.3 Renewal of Qualification

Requalification of a welder or welding operator shall be required under any of the following conditions:

a. It has been more than 6 months since the welder or welding operator has used the specific welding process for which he is qualified.

b. There is specific reason to question the welder or welding operator's ability to make welds that meet the requirements of these specifications.

c. The welder or welding operator was qualified by an employer other than those firms performing work under this contract, and a qualification test has not been taken within the past 12 months. Records showing periods of employment, name of employer where welder, or welding operator, was last employed, and the process for which qualified shall be submitted as evidence of conformance.

d. A tacker who passes the qualification test shall be considered eligible to perform tack welding indefinitely in the positions and with the processes for which he is qualified, unless there is some specific reason to question the tacker's ability. In such a case, the tacker shall be required to pass the prescribed tack welding test.

1.7 INSPECTOR QUALIFICATION

Inspection and nondestructive testing personnel shall be qualified in accordance with the requirements of ASNT-01 for Levels I or II in the applicable nondestructive testing method. The inspector may be supported by assistant welding inspectors who are not qualified to ASNT-01, and assistant inspectors may perform specific inspection functions under the supervision of the qualified inspector.

1.8 SYMBOLS

Symbols shall be in accordance with AWS A2.4, unless otherwise indicated.

1.9 SAFETY

Safety precautions during welding shall conform to AWS Z49.1.

PART 2 PRODUCTS

2.1 WELDING EQUIPMENT AND MATERIALS

All welding equipment, electrodes, welding wire, and fluxes shall be capable of producing satisfactory welds when used by a qualified welder or welding operator performing qualified welding procedures. All welding equipment and materials shall comply with the applicable requirements of AWS D1.1.

PART 3 EXECUTION

3.1 WELDING OPERATIONS

3.1.1 Requirements

Workmanship and techniques for welded construction shall conform to the requirements of AWS D1.1 and AISC-04 When AWS D1.1 and the AISC-04 specification conflict, the requirements of AWS D1.1 shall govern.

3.1.2 Identification

Welds shall be identified in one of the following ways:

a. Written records shall be submitted to indicate the location of welds made by each welder, welding operator, or tacker.

b. Each welder, welding operator, or tacker shall be assigned a number, letter, or symbol to identify welds made by that individual. The Contracting Officer may require welders, welding operators, and tackers to apply their symbol next to the weld by means of rubber stamp, felt-tipped marker with waterproof ink, or other

methods that do not cause an indentation in the metal. For seam welds, the identification mark shall be adjacent to the weld at 3 foot intervals. Identification with dye stamps or electric etchers shall not be allowed.

3.2 QUALITY CONTROL

Testing shall be done by an approved inspection or testing laboratory or technical consultant, or if approved, the Contractor's inspection and testing personnel may be used instead of the commercial inspection or testing laboratory or technical consultant. The Contractor shall perform visual inspection and radiographic or ultrasonic inspection methods to determine conformance with paragraph STANDARDS OF ACCEPTANCE. Procedures and techniques for inspection shall be in accordance with applicable requirements of AWS D1.1, except that in radiographic inspection only film types designated as "fine grain," or "extra fine," shall be employed.

3.3 STANDARDS OF ACCEPTANCE

Dimensional tolerances for welded construction, details of welds, and quality of welds shall be in accordance with the applicable requirements of AWS D1.1 and the contract drawings. Nondestructive testing shall be by visual and radiographic or ultrasonic inspection methods. The minimum extent of nondestructive testing shall be random 15 percent of welds or joints.

3.3.1 Nondestructive Examination

The welding shall be subject to inspection and tests in the mill, shop, and field. Inspection and tests in the mill or shop will not relieve the Contractor of the responsibility to furnish weldments of satisfactory quality. When materials or workmanship do not conform to the specification requirements, the Government reserves the right to reject material or workmanship or both at any time before final acceptance of the structure containing the weldment.

3.3.2 Destructive Tests

When metallographic specimens are removed from any part of a structure, the Contractor shall make repairs. The Contractor shall employ qualified welders or welding operators, and shall use the proper joints and welding procedures, including peening or heat treatment if required, to develop the full strength of the members and joints cut and to relieve residual stress.

3.4 GOVERNMENT INSPECTION AND TESTING

In addition to the inspection and tests performed by the Contractor for quality control, the Government will perform inspection and testing for acceptance to the extent determined by the Contracting Officer. The costs of such inspection and testing will be borne by the Contractor if unsatisfactory welds are discovered, or by the Government if the welds are satisfactory. The work may be performed by the Government's own forces or under a separate contract for inspection and testing. The Government reserves the right to perform supplemental nondestructive and destructive tests to determine compliance with paragraph STANDARDS OF

ACCEPTANCE.

3.5 CORRECTIONS AND REPAIRS

When inspection or testing indicates defects in the weld joints, the welds shall be repaired using a qualified welder or welding operator as applicable. Corrections shall be in accordance with the requirements of AWS D1.1 and the specifications. Defects shall be repaired in accordance with the approved procedures. Defects discovered between passes shall be repaired before additional weld material is deposited. Wherever a defect is removed and repair by welding is not required, the affected area shall be blended into the surrounding surface to eliminate sharp notches, crevices, or corners. After a defect is thought to have been removed, and before rewelding, the area shall be examined by suitable methods to insure that the defect has been eliminated. Repair welds shall meet the inspection requirements for the original welds. Any indication of a defect shall be regarded as a defect, unless reevaluation by nondestructive methods or by surface conditioning shows that no unacceptable defect is present.

--End of Section--

DIVISION 5 - METALS

SECTION 05120

STRUCTURAL STEEL AND MISCELLANEOUS

TABLE OF CONTENTS

PART 1 GENERAL 1
1.1 REFERENCES 1
1.2 GENERAL REQUIREMENTS 2
1.3 SUBMITTALS 3
1.4 WORKMANSHIP 4
1.5 STORAGE 4

PART 2 PRODUCTS 4
2.1 CARBON GRADE STEEL 4
2.2 STEEL PIPE 4
2.3 HIGH STRENGTH BOLTS AND NUTS 4
2.4 ANCHOR BOLTS 4
2.5 NUTS DIMENSIONAL STYLE 4
2.6 WASHERS 4
2.7 HANDRAILS 5
2.8 OPEN STEEL FLOOR GRATING 5
2.9 MANHOLE STEPS 5

PART 3 EXECUTION 5
3.1 FABRICATION 5
3.2 ERECTION 5
3.2.1 Connections 5
3.2.2 Field Welded Connections 6

SECTION 05120

STRUCTURAL STEEL AND MISCELLANEOUS

PART 1 GENERAL

1.1 REFERENCES

The publications listed below form a part of this specification to the extent referenced. The publications are referred to in the text by basic designation only.

AMERICAN INSTITUTE OF STEEL CONSTRUCTION (AISC)

AISC-04	(1989) Specification for Structural Steel Buildings - Allowable Stress Design and Plastic Design
AISC S303	(1992) Code of Standard Practice for Steel Buildings and Bridges
AISC S329	(1986) Allowable Stress Design Specification for Structural Joints Using ASTM A325 or ASTM A490

AMERICAN SOCIETY FOR TESTING AND MATERIALS (ASTM)

ASTM A 6M	(1995c) General Requirements for Rolled Structural Bars, Plates, Shapes, and Sheet Piling
ASTM A 36M	(1994) Carbon Structural Steel
ASTM A 53	(1995a) Pipe, Steel, Black and Hot-Dipped, Zinc-Coated, Welded and Seamless
ASTM A 123	(1989a) Zinc (Hot-Dip Galvanized) Coatings on Iron and Steel Products
ASTM A 153	(1982; R 1987) Zinc Coating (Hot-Dip) on Iron and Steel Hardware
ASTM A 325	(1994) Structural Bolts, Steel, Heat Treated, 120/105 ksi Minimum Tensile Strength

ASTM A 500	(1993) Cold-Formed Welded and Seamless Carbon Steel Structural Tubing in Rounds and Shapes
ASTM A 525	(1993) General Requirements for Steel Sheet, Zinc-Coated (Galvanized) by the Hot-Dip Process
ASTM A 563	(1993) Carbon Alloy Steel Nuts
ASTM A 653	(1997) Steel Sheet, Zinc-Coated (Galvanized) or Zinc-Iron Alloy-Coated (Galvannealed) by the Hot-Dip Process
ASTM F 844	(1990) Washers, Steel, Plain (Flat), Unhardened for General Use

AMERICAN SOCIETY OF MECHANICAL ENGINEERS (ASME)

ASME B46.1	(1985) Surface Texture (Surface Roughness, Waviness and Lay)

AMERICAN WELDING SOCIETY (AWS)

AWS A2.4	(1993) Standard Symbols for Welding, Brazing and Nondestructive Examination
AWS D1.1	(1994) Structural Welding Code - Steel

1.2 GENERAL REQUIREMENTS

Structural steel fabrication and erection shall be performed by an organization experienced in structural steel work of equivalent magnitude. The Contractor shall verify all measurements and shall take all field measurements necessary before fabrication. The Contractor shall be responsible for correctness of detailing, fabrication, and for the correct fitting of structural members. Items specified to be galvanized, when practical and not indicated otherwise, shall be hot-dip galvanized after fabrication. Galvanizing shall be in accordance with ASTM A 53, ASTM A 123, ASTM A 153, ASTM A 525, ASTM A 653, as applicable. Parts and materials necessary to complete each item, even though such work is not definitely shown or specified, shall be included. Connections, for any part of the structure not shown on the contract drawings,

shall be considered simple shear connections and shall be designed and detailed in accordance with pertinent provisions of AISC S329. Substitution of sections or modification of connection details will not be accepted unless approved by the Contracting Officer. AISC-04 shall govern the work. Welding shall be in accordance with AWS D1.1. High-strength bolting shall be in accordance with AISC S329.

1.3 SUBMITTALS

Government approval is required for submittals with a "GA" designation; submittals having an "FIO" designation are for information only. The following shall be submitted in accordance with Section 01330 SUBMITTAL PROCEDURES:

SD-04 Drawings

Handrail; GA. Metal Grid Walkway; GA.

Detailed shop and erection drawings of handrail, including members and connections not shown on the contract drawings, shall be submitted. Welds shall be indicated by standard welding symbols in accordance with AWS A2.4.

SD-08 Statements

Erection of structure. FIO

SD-13 Certificates

Mill Test Reports; FIO.

Certified copies of mill test reports for structural steel, structural bolts, nuts, washers and other related structural steel items.

Welder Qualifications; FIO.

Certified copies of welder qualifications test records showing qualification in accordance with AWS D1.1.

Fabrication; FIO.

A copy of the AISC certificate indicating that the fabrication plant meets the specified structural steelwork category.

SD-14 Samples

High Strength Bolts and Nuts; GA. Carbon Steel Bolts and Nuts; GA.
Nuts Dimensional Style; GA. Washers; GA.

Random samples of bolts, nuts, and washers as delivered to the job site if requested, taken in the

presence of the Contracting Officer and provided to the Contracting Officer for testing to establish compliance with specified requirements.

1.4 WORKMANSHIP

Drilling and punching shall produce clean true lines and surfaces. Welding shall be continuous along the entire area of contact except as otherwise specified or shown on the contract documents. Poor matching of holes for fasteners shall be cause for rejection. Installation of structural steel shall be in accordance with erection plan.

1.5 STORAGE

Material shall be stored out of contact with the ground in such manner and location as will minimize deterioration.

PART 2 PRODUCTS

2.1 CARBON GRADE STEEL

Carbon grade steel shall conform to ASTM A 36M and shall be hot dip galvanized according to ASTM A 123, ASTM A 653 or ASTM A 525 as applicable.

2.2 STEEL PIPE

Steel pipe shall conform to ASTM A 53, Type E or S, Grade B to the size shown on the contract drawing.

2.3 HIGH STRENGTH BOLTS AND NUTS

High strength bolts shall conform to ASTM A 325, Type 1 with carbon steel nuts conforming to ASTM A 563, Grade C. Bolts and nuts shall be hot dip galvanized conforming to ASTM A 153, Class C.

2.4 ANCHOR BOLTS

Anchor bolts shall conform to ASTM A 36 M and galvanized in accordance to ASTM A 153, Class C.

2.5 NUTS DIMENSIONAL STYLE

Carbon steel nuts shall be Heavy Hex style when used with ASTM A 325.

2.6 WASHERS

Plain washers shall conform to ASTM F 844. Washers shall be hot dip galvanized conforming to ASTM A 153, Class C.

2.7 HANDRAILS

Steel handrails, including inserts in concrete, shall be steel pipe conforming to ASTM A 53 and shall be hot-dip galvanized. Exposed welds shall be ground smooth. Corner joints shall be coped or mitered, well formed, and in true alignment.

2.8 OPEN STEEL FLOOR GRATING

The open steel floor grating shall be welded bar grating system. Steel used in bearing bars, cross bars and connecting bars of rectangular section shall conform to ASTM A569 for hot rolled carbon steel sheet and strip. Floor grating shall be hot-dip galvanized.

2.9 MANHOLE STEPS

Manhole steps shall be 1” plain bar, galvanized steel, bent to shape, as shown on contract drawings. Manhole steps shall be placed 12 inches on center in a straight line.

PART 3 EXECUTION

All items shall be installed to the lines and grades as indicated on the contract drawings, as recommended by the manufacturer or as specified herein.

3.1 FABRICATION

Fabrication shall be in accordance with the applicable provisions of AISC-04. Fabrication and assembly shall be done in the shop to the greatest extent possible. Compression joints depending on contact bearing shall have a surface roughness not in excess of 0.5 micro-inch as determined by ASME B46.1, and ends shall be square within the tolerances for milled ends specified in ASTM A 6M. Structural steelwork shall be galvanized. Galvanizing shall be in accordance with ASTM A 123, ASTM A 525, or ASTM A 653 as applicable.

3.2 ERECTION

Handrail shall be placed in pipe sleeves embedded in concrete at abutment location. Handrail placed in pipe sleeves shall have the void between pipes filled with molten lead to discourage movement.

3.2.1 Connections

Anchor bolts and other connections shall be provided and shall be properly located and built into connecting work.

3.2.2 Field Welded Connections

Field welded structural connections shall be completed before load is applied.

End of Section

DIVISION 5 - METALS

SECTION 05914

SLUICE GATE AND GATE LIFT ASSEMBLY

TABLE OF CONTENTS

PART 1 GENERAL 1
1.1 SCOPE 1
1.2 APPLICABLE PUBLICATIONS 1
1.3 SUBMITTALS 2
1.4 DELIVERY, STORAGE, AND HANDLING 3
1.5 PROJECT/SITE CONDITIONS 4
1.6 WARRANTY 4
1.7 OPERATION AND MAINTENANCE 4

PART 2 PRODUCTS 4
2.1 MATERIALS 4
2.1.1 Frame and Guide Rails 5
2.1.2 Cover or Slide 5
2.1.3 Seating Faces 5
2.1.4 Wedges 5
2.1.5 Wall Thimbles and Anchor Bolts 5
2.1.6 Stem and Stem Couplings 6
2.1.7 Stem Guides 6
2.1.8 Gate Lift Operator 6
2.1.9 Portable Gasoline Powered Actuator 6
2.1.10 Handwheel 7
2.1.11 Stem Cover and Position Indication 7
2.1.12 Painting 7
2.2 FABRICATION 7
2.2.1 Fabrication Drawings 7
2.2.2 Shop Assembly Drawings 8
2.2.3 Delivery Drawings 8
2.2.4 Field Installation Drawings 8

PART 3 EXECUTION 8
3.1 INSTALLATION 8
3.1.1 Placement of Wall Thimble 8
3.1.2 Concrete Pour 8
3.1.3 Sluice Gate Placement 9
3.2 ACCEPTANCE TRIAL OPERATION AND TESTS 9
3.3 PROTECTION OF FINISHED WORK 9

SECTION 05914

SLUICE GATE AND GATE LIFT ASSEMBLY

PART 1 GENERAL

1.1 SCOPE

The work to be done under this section of specifications consists of furnishing all plants, labor, materials, equipment and performing all operations and tests necessary for the installation of sluice gate and gate lift assembly, gasoline powered portable actuator, position indicator, grease flange, manual operator with removal crankhandle, stem cover, pedestal base hardware, stem, stem guides, stem stop nuts, sluice gate with extended flange and wall thimble, and other appurtenances as specified herein. The sluice gate and gate lift assembly shall be the product supplied by one manufacturer of similar assembly for similar use. The sluice gate and gate lift assemblies shall be the size, type, material and construction as shown on the drawings and specified herein. Gates shall meet the requirements of AWWA Specifications C501 or as modified by these specifications. All component parts shall be of the type of material shown, and interchangeable where size and material are the same without grinding, chipping, or special fitting in the field. All mating and sliding parts shall be fully machined. All sluice gate parts, including lift, shall be designed for the heads based on design water surface elevation, flowline elevation and gate size shown on the contract drawings.

The gasoline-powered actuator shall be a portable, two-cycle, gasoline engine actuator furnished with all the necessary adapters to drive the sluice gate specified.

Drive unit shall incorporate a direct drive design.

The unit shall drive the operators using a (T-drive) gearbox. Reverse operation is achieved by rotating the drive unit 180 degrees.

A safety clutch must be supplied with any unit that exceeds 80 foot pounds of output torque.

The operator unit shall be provided with fabricated steel pedestal or baseplate with ample base area to transmit thrust forces to floor or support without undue bearing pressure. The entire unit shall be a self-contained unit with integral gearing.

1.2 APPLICABLE PUBLICATIONS

The publications listed below form a part of this specification to the extent referenced. The publications are referred to in the text by basic designation only.

AMERICAN WATER WORKS ASSOCIATION (AWWA)

AWWA C501	(1992) AWWA Standard for cast-iron Sluice Gate

AMERICAN SOCIETY OR TESTING AND MATERIALS (ASTM)

ASTM A 126	(1984;R 1991) Gray Iron Castings for Valves, Flanges, And Pipe Fittings
ASTM A 276	(1992) Free-Machining Stainless and Heat - Resisting Steel Bars
ASTM B 584	(1993b) Copper Alloy Sand Castings for General Applications
ASTM F 593	(1991) Stainless Steel Bolts, Hex Cap Screws, And Studs
ASTM F 594	(1991) Stainless Steel Nuts

1.3 SUBMITTALS

Government approval is required for all submittals with a “GA” designation; submittals having an “FIO” designation are for information only. The following shall be submitted in accordance with Section 01330 SUBMITTAL PROCEDURES:

SD-01

Materials Mechanical & Equipment; GA.

Manufacturer’s catalog data and descriptive literature shall be submitted for all standard equipment and products to be incorporated in the work. This data shall include specifications and assembly drawings showing sizes, ratings, parts and material lists, overall dimensions, and mounting dimensions.

Design and Performance Requirements; FIO.

Shop Assembly and Testing; FIO.

Procedures for shop testing shall be submitted.

Field Testing; GA.

Procedure for field-testing shall be submitted.

SD-04 Drawings

Detail Drawings; GA.

Detail drawings and schematics shall be submitted for approval.

SD-07 SCHEDULES

Material Orders; FIO.

Copies of purchase orders, mill orders, shop orders and work orders for materials shall be submitted prior to the use of the materials in the work.

Material Lists; FIO.

Materials list for fabricated items shall be submitted at the time of submittal of detail drawings.

Shipping Bill; FIO.

Shipping bill shall be submitted with the delivery of finished pieces to the site.

SD-09 Reports

Shop Tests, Inspections, and Verifications; FIO.

Certified test reports for materials shall be submitted with all materials delivered to the site. Operational test reports shall be submitted for all required shop testing and testing of the equipment after installation.

Acceptance Trial Operation and Test; FIO.

Submit operational and test results before completion of the contract.

SD-18 Records

Materials Disposition Records; FIO.

Submit system of identification that shows the disposition of specific lots of approved materials and fabricated items in the work before completion of contract.

SD-19 Operation and Maintenance Manuals

Operation and maintenance Manuals, GA.

Operation and maintenance requirement shall be as specified.

1.4 DELIVERY, STORAGE, AND HANDLING

Materials and fabricated items shall be packed as necessary to ensure safe shipment and is the responsibility of the Contractor. The Contractor shall count all parts after receiving the shipment notifying the manufacturer of any shortages immediately. Sluice gate and equipment shall be stored in accordance with the recommendations of the manufacturer. If damage occurs to any item of the sluice gate or gate lift assembly, the Contractor shall take full responsibility to

replace or repair the item broken whether within warranty or not as verified by the manufacturer and approved by the Contracting Officer at no cost to the government. While items are stored at the project site, they shall be stored with protection from weather, humidity, temperature variation, dirt and rust, vandalism, theft, or any other potential damage and in compliance with the recommendations of the manufacturer.

1.5 PROJECT/SITE CONDITIONS

The Contractor shall visit the site to thoroughly familiarize himself with all details of the work and working conditions, to verify dimensions in the field, and he shall then advise the Contracting Officer of any discrepancies prior to performing any work. The Contractor shall be specifically responsible for the coordination and proper relation of his work to the structure and work of all trades.

1.6 WARRANTY

Every effort shall be made to assure the highest quality merchandise, free of any defects, warranted against defects in material and workmanship when used in accordance with the standards and/or instructions recommended by the manufacturer. Products shall be warranted against defects in materials and workmanship for (18) eighteen months after shipment or (12) twelve months after installation, whichever occurs first. In cases where the equipment manufacturer's advertised minimum guarantee is in excess of the above warranty, it shall remain in force for its full period. Upon receipt of notice from the Government of failure of any of the parts during the warranty period, new replacement parts shall be furnished and installed promptly at no additional cost to the Government.

1.7 OPERATION AND MAINTENANCE

The Contractor shall furnish 3 complete sets of instructions containing the manufacturer's operation and maintenance instructions for the sluice gate and gate lift assembly to the Contracting Officer. Each set shall be permanently bound and shall have a hard cover. One complete set shall be furnished prior to field-testing and the remaining sets shall be furnished before the contract is completed. The following identification shall be inscribed on the covers; "OPERATING AND MAINTENANCE INSTRUCTIONS," title of the project, location of the project, the name of the Contractor, and the contract number. The Operation and Maintenance (O&M) Manual shall contain all information that may be needed or useful for operation, maintenance, repair, dismantling or assembling, and for identification of parts for ordering replacements. The manual will be subject to approval.

PART 2 PRODUCTS

2.1 MATERIALS

All materials used in the construction of the sluice gate or gate lift assembly and other appurtenances shall be the best suited for the application and shall be as specified herein.

2.1.1 Frame and Guide Rails

The frame and guide rails shall be cast iron conforming to the requirements of ASTM A-126 Class B and shall be one-piece construction or may have guides doweled and bolted to the frame. Frames shall be of the standard extended flange type with rectangular opening as indicated on the plans. A machined dovetail groove for the mounting of the bronze seat facings shall be provided on the front face of the frame around top and sides of the opening. A neoprene seal shall be securely contained in the invert of this frame. The frame shall be provided with cast-on pads, which shall be machined, drilled, and tapped, for the mounting of the wedge device. The back of the frame flange shall be machined to a plane and drilled with standard anchor bolt pattern. Guide rails shall be of such length as to retain at least one-half of the vertical height of the slide when it is in the fully opened position. A groove running the full length of the guide rail shall be accurately machined to receive the slide tongue, with a nominal clearance of 1/16 inch. The gate assembly shall be rated for operation under condition of 55 foot seating and 20 foot unseating.

2.1.2 Cover or Slide

The cover shall be cast iron conforming to ASTM A126 Class B and shall be of one-piece construction. The cover shall have vertical and horizontal ribs, a reinforced pocket for receiving the thrust nut, pads for receiving the wedges, and a reinforced periphery around the back side of the cover for machining of the dovetail grooves in which the seating faces shall be mounted. All wedge pads shall be machined, drilled and tapped to receive the wedge devices. The cover shall have fully machined tongues running the full length of each side to properly engage the guide rail grooves. A thrust nut shall be provided to attach the slide to the stem. The nut shall be threaded and, in the case of rising stems, provided with keys on two setscrews locked into indents in the stem to prevent rotation of the stem.

2.1.3 Seating Faces

All seating faces for both covers and frames shall be malleable extruded corrosion resistant material of a shape that will fill and permanently lock in the full width grooves of the slide and the frame. No other means of attachment will be allowed. They shall be machined to a 63 micro-inch finish, or better.

2.1.4 Wedges

All wedges and wedge blocks shall be solid manganese bronze conforming to ASTM B-584-Alloy 865 and shall be machined to give maximum contact and wedge action. Wedges shall be fully adjustable, but once set shall not rotate or move from the desired position. All fasteners and adjustment screws shall be stainless steel conforming to ASTM F593 Grade B8 for bolts and ASTM F-594 Grade 8 for nuts.

2.1.5 Wall Thimbles and Anchor Bolts

Wall thimbles shall be provided with all gates as shown on the plans. Each thimble shall be of

one-piece cast iron construction and of the section and depth as specified in the plans. There shall be integrally cast water stop around the periphery of the thimble. The front flange of the thimble shall be machined, drilled and tapped to receive the sluice gate attaching studs. Bolt pattern shall match gate bolt pattern. After machining, the front flange shall be marked with vertical centerline and the word "top" for correct alignment. Thimbles shall be provided with grout holes in the invert to permit entrapped air to escape. A mastic type gasket shall be provided between the sluice gate and the wall thimble. Anchor bolts shall be corrosion resistant.

2.1.6 Stem and Stem Couplings

Operating stems shall be of a size as shown on the drawings to safely withstand stresses induced by normal operating forces without buckling or permanent distortion. Stems shall be fabricated from round bar stock of stainless steel conforming to ASTM A-276 Type 303 or 276 Type 304 and shall be provided with 29 degree modified or full acme threads. Rising stems shall be provided with adjustable limit / stop nuts made of cast bronze above and below the floor stand lift nut to prevent over travel of the gate in either direction.

2.1.7 Stem Guides

Stem guides shall be cast iron conforming to ASTM A-126 Class B, with bronze bushings, and mounted on cast iron brackets. Guides shall be adjustable in two directions and shall be so constructed that when properly spaced they will hold the stem in alignment and still allow enough play to permit easy operation. Stem guide spacing shall be as recommended by the manufacturer or as shown on the contract drawings, but in no case shall it exceed a l/r ratio of 200. Brackets shall be attached to the wall or structural member by A325 bolts or by stainless steel anchors (into existing concrete structure) of sufficient strength to prevent twisting or sagging under load.

2.1.8 Gate Lift Operator

A pedestal mounted floor stand unit shall operate the sluice gates. The unit shall be Hydrogate Type CPE-20 or approved equal. The pedestal floor stand unit shall be operated by a removable handwheel or crankhandle and shall be compatible with the portable gasoline powered actuator as specified herein. The pedestal shall be cast iron. The pedestal gate lift shall be attached to the structural platform with corrosion resistant hardware. Each lift shall be provided with a threaded cast bronze lift nut to engage the threaded portion of the stem. The lift nut shall have a machined flange, fitted above and below with thrust ball or roller bearings. Gate lift operators shall have either a single or double gear reduction. Lifts having a reduction greater than 4:1 shall be two-speed. The gears shall be machined-cut teeth. Bronze bushings or roller bearings shall support pinion gears. The lift mechanism shall be totally enclosed within a cast iron housing adequately provided with lubricated fittings. The handcrank-input shafts shall be approximately 36 inches from the operating floor unless otherwise shown. A grease flange for lubrication of stem shall be provided and mounted between the operator and pedestal. A stem guide shall be provided at the base of the pedestal. The rising stem lift shall be provided with a dial type position indicator.

2.1.9 Portable Gasoline Powered Actuator

The gasoline powered actuator shall be Waterman GP-6 or approved equal. The operator shall be a completely portable, two-cycle, gasoline engine actuator furnished with all the necessary adapters to drive the sluice gate specified. The unit shall be furnished with aluminum tripod cart for easy operation. The unit shall be furnished with 64 spline to ¾ square coupler for interchanging between the two input shafts

Drive unit shall incorporate a direct drive design.

The unit shall drive the operators using a (T-drive) gear box. Reverse operation is achieved by rotating the drive unit 180 degrees.

A safety clutch must be supplied with any unit that exceeds 80 foot pounds of output torque.

2.1.10 Handwheel

The gate lift shall be equipped with a removal crankhandle for manual operation. The handwheel or crankhandle shall require an effort of no more than 60 pounds on the rim for seating or unseating load, or 40 pounds for running load. The handwheel or crankhandle shall have an arrow and the word "Open" indicating required rotation. The handwheel or crankhandle shall operate in the clockwise direction to close.

2.1.11 Stem Cover

All gates shall have rising stems unless otherwise noted, and shall be provided with a galvanized metal pipe stem cover. The top of stem cover shall be a minimum of 6 inches from the top of stem when the gate is in the fully raised position. The cover shall be of sufficient diameter and length to permit full travel of threaded stem without obstruction. The top of the stem cover shall be capped and the bottom end vented, drained, and threaded with national pipe threads for easy field installation.

2.1.12 Painting

All cast iron parts of the sluice gate and gate lift assembly (not in bearing or sliding contact) shall be painted with one coat iron oxide primer and top two coats of gray color silicone enamel paint. Insofar as practical, the complete coating system shall be applied to individual components and items before assembly to ensure complete coverage and maximum protection against corrosion. Chips, scratches, and other damage to shop-applied painted surfaces shall be repainted in the field with appropriate matching paints as recommended by the manufacturer.

2.2 FABRICATION

Detail drawings, including fabrication drawings, shop assembly drawings, delivery drawings and field installation drawings shall be as specified herein.

2.2.1 Fabrication Drawings

Fabrication drawings shall show complete details of materials, tolerances, connections, and

proposed welding sequences which clearly differentiate shop welds and field welds.

2.2.2 Shop Assembly Drawings

Shop assembly drawings shall provide details for connecting the adjoining fabricated components in the shop to assure satisfactory field installation.

2.2.3 Delivery Drawings

Delivery drawings shall provide descriptions of methods of delivering components to the site, including details for supporting fabricated components during shipping to prevent distortion or other damages.

2.2.4 Field Installation Drawings

Field installation drawings shall provide a detailed description of the field installation procedures. The description shall include the location and method of support of installation and handling equipment; provisions to be taken to protect concrete and other work during installation; method of maintaining components in correct alignment; and methods for installing other appurtenant items.

PART 3 EXECUTION

3.1 INSTALLATION

3.1.1 Placement of Wall Thimble

Place the thimble in correct position in the forms and secure in place. The top (marked on the flange face) should be aligned with a plumb. Thimble should be flush or projecting slightly from the wall face.

Use timbers or other bracing on the inside of the opening to support the thimble and prevent warpage during the pour. This is especially important on larger thimbles or when the concrete cover will be especially high.

Secure anchor bolts for guide rail extensions (or provide block out) in the proper position as given on manufacturer's installation drawing. Check projection and perpendicular alignment of these anchors.

3.1.2 Concrete Pour

Pour concrete, using care not to tilt or move thimble from its original position in the forms.

Let concrete set, then remove forms and bracings.

3.1.3 Sluice Gate Placement

Thoroughly clean the front machined face of the thimble and place clean studs into tapped holes provided.

Clean the back of the gate frame or flange thoroughly. Apply a thin coat of mastic (such as butyl rubber compound or black asphaltic compound), on the front face of the thimble.

Mount the completely assembled gate on the thimble. Place nuts on studs and tighten uniformly until a metal to metal contact is made, removing excess mastic.

Check clearance between seating surfaces with .004” feeler gauge. In the event that the gate is not seating properly, make wedge adjustments. Gate is now ready for initial operation.

3.2 ACCEPTANCE TRIAL OPERATION AND TESTS

The gate manufacture Erection Engineer having greater than 5 years work experience shall be at the jobsite during gate start up or gate acceptance operations. Engineer shall verify the setting of limit/stop nuts. After the sluice gates and gate lift assemblies have been installed, the Contracting Officer will examine the complete system for final acceptance. Operation and test results shall be furnished to the Contracting Officer. The sluice gate and gate lift assemblies will be examined first to determine whether or not the workmanship conforms to the specification requirements. The Contractor shall operate the gates throughout their full operating range a sufficient number of times using the gasoline powered portable actuator unit and the handwheel or crankhandle manual operation to demonstrate proper operation. The initial operation of the gate assembly shall be conducted in the dry. The neoprene bottom seals shall be checked to ensure that they are compressed against the bottom of the slide. Adjustments shall be made to the assembly until all components function as required. The other appurtenances will be inspected to assure proper operation. Required repairs or replacements to correct defects, as determined by the Contracting Officer, shall be made at no additional cost to the Government. The trial operation and testing shall be repeated after defects are corrected.

3.3 PROTECTION OF FINISHED WORK

The Contractor shall take appropriate means to protect the sluice gate and gate lift assembly for the duration of the construction until the contract is complete.

End of Section

DIVISION 6 – WOOD & PLASTICS

THRU

DIVISION 16 - ELECTRICAL

(NOT USED)