DESOTO COUNTY REGIONAL UTILITY AUTHORITY
LOWER CAMP CREEK FORCE MAIN
PHASE 1B, PROJECT 3
DESOTO COUNTY, MISSISSIPPI
SOLICITATION NUMBER: W912EQ-04-B-0002

EAI / WEI, LLC
143-A LEFLEURS SQUARE
JACKSON, MISSISSIPPI 39211
PHONE: 601-355-9526
FAX: 601-352-3945

DESOTO COUNTY REGIONAL UTILITY AUTHORITY

Barry Bridgforth
Joe Frank Lauderdale - Vice President
John McCormack
B.J. Page - President
Robert Ramage
Frank Roberts
Mayor Robert Smith
Bill Austin - Executive Director

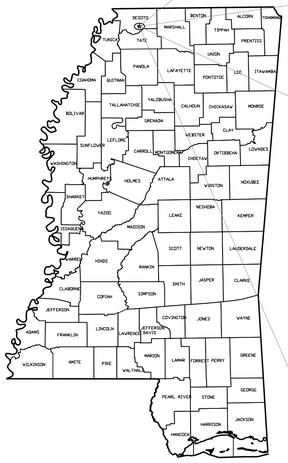

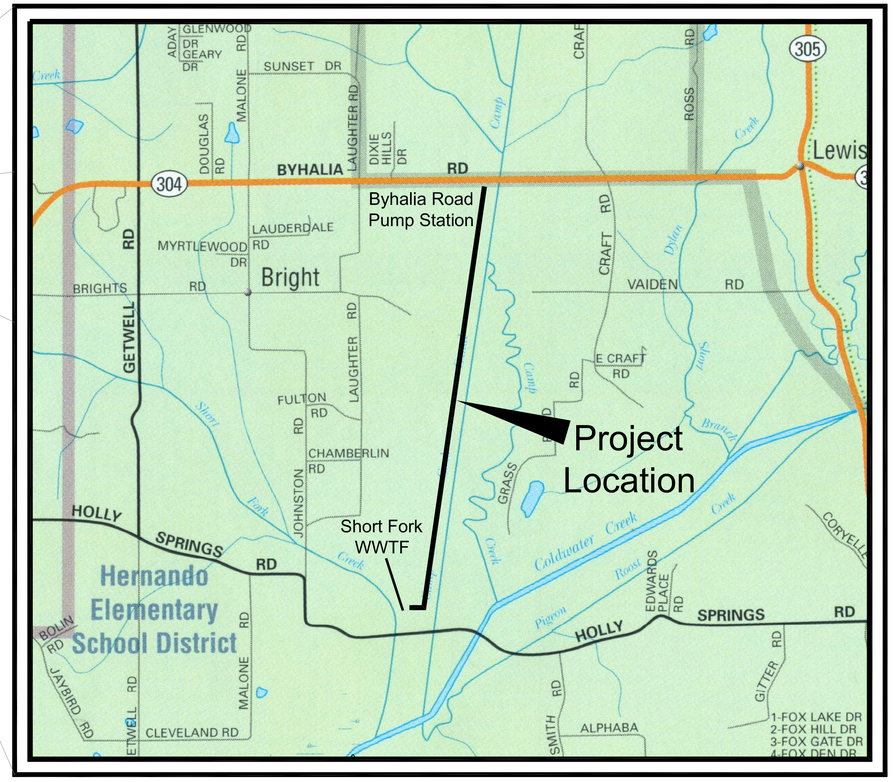

VICINITY MAP
JULY, 2003
PROJECT NO. D00-064

INDEX TO DRAWINGS

SHEET NO.	DESCRIPTION
G1.00	COVER SHEET
C1.00	LOWER CAMP CREEK FORCE MAIN AND CONTROL LAYOUT PLAN
C1.01	PLAN/PROFILE SHEET (STA 0+00 – STA 12+00)
C1.02	PLAN/PROFILE SHEET (STA 12+00 – STA 19+69.47)
C1.03	PLAN/PROFILE SHEET (STA 19+69.47 – STA 35+00)
C1.04	PLAN/PROFILE SHEET (STA 35+00 – STA 50+00)
C1.05	PLAN/PROFILE SHEET (STA 50+00 – STA 65+00)
C1.06	PLAN/PROFILE SHEET (STA 65+00 – STA 80+00)
C1.07	PLAN/PROFILE SHEET (STA 80+00 – STA 95+00)
C1.08	PLAN/PROFILE SHEET (STA 95+00 – STA 110+00)
C1.09	PLAN/PROFILE SHEET (STA 110+00 – STA 125+00)
C1.10	PLAN/PROFILE SHEET (STA 125+00 – STA 140+00)
C1.11	PLAN/PROFILE SHEET (STA 140+00 – STA 155+00)
C1.12	PLAN/PROFILE SHEET (STA 155+00 – STA 170+00)
C1.13	PLAN/PROFILE SHEET (STA 170+00 – STA 185+00)
C1.14	PLAN/PROFILE SHEET (STA 185+00 – STA 200+00)
C1.15	PLAN/PROFILE SHEET (STA 200+00 – 207+47.80)
C2.00	STANDARD DETAILS
C2.01	STANDARD DETAILS
C2.02	STANDARD DETAILS
C2.03	TEMPORARY EROSION CONTROL DETAILS

DESOTO COUNTY REGIONAL UTILITY AUTHORITY
LOWER CAMP CREEK FORCE MAIN
W912EQ-04-B-0002

EPA
United States
Environmental Protection
Agency

EPA NO. XP-98485599-0

WAGGONER Engineering, Inc.

EAI / WEI, LLC
JACKSON, MISSISSIPPI

DESOTO COUNTY REGIONAL UTILITY AUTHORITY

US Army Corps of Engineers ®
Memphis District

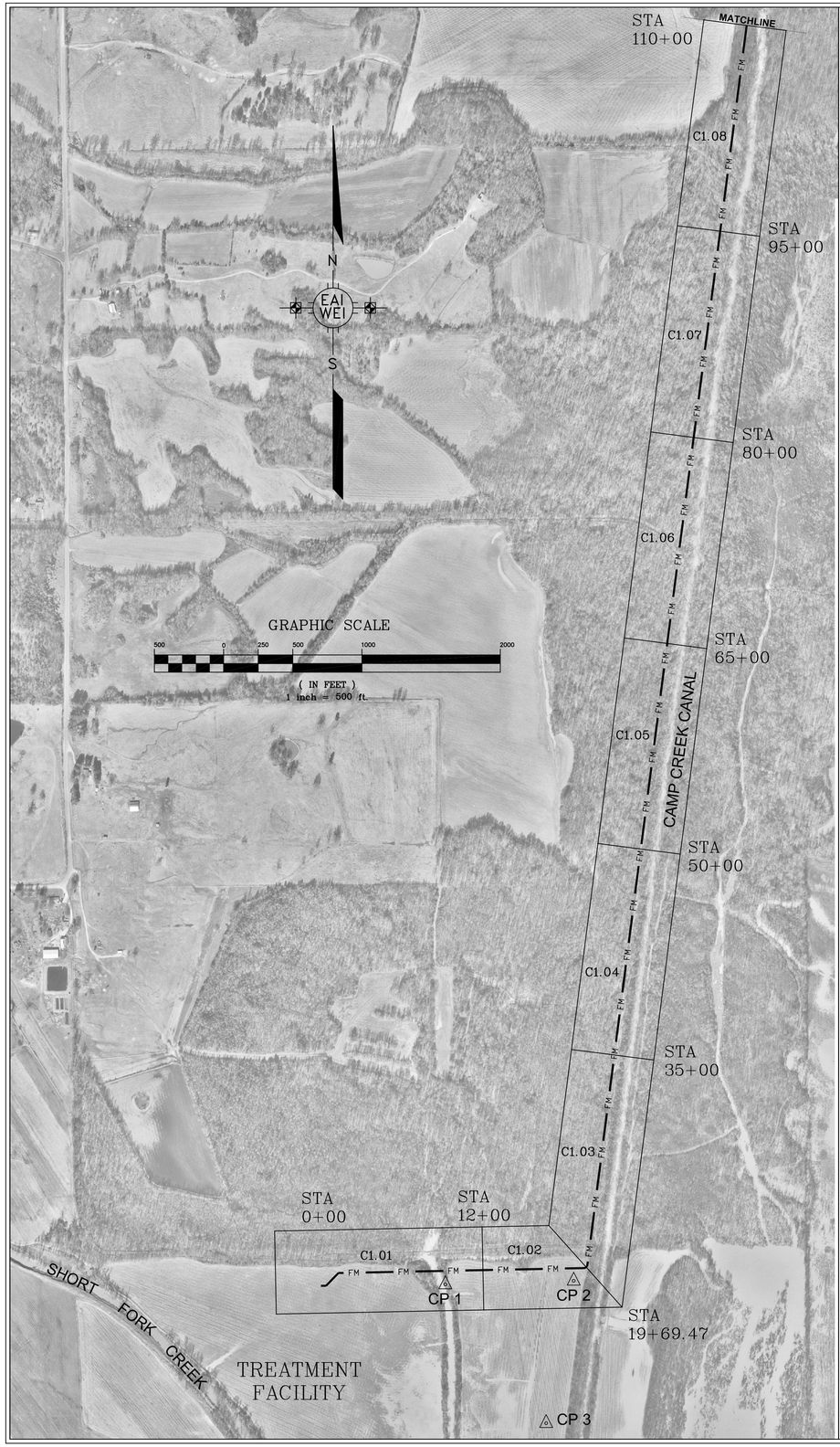

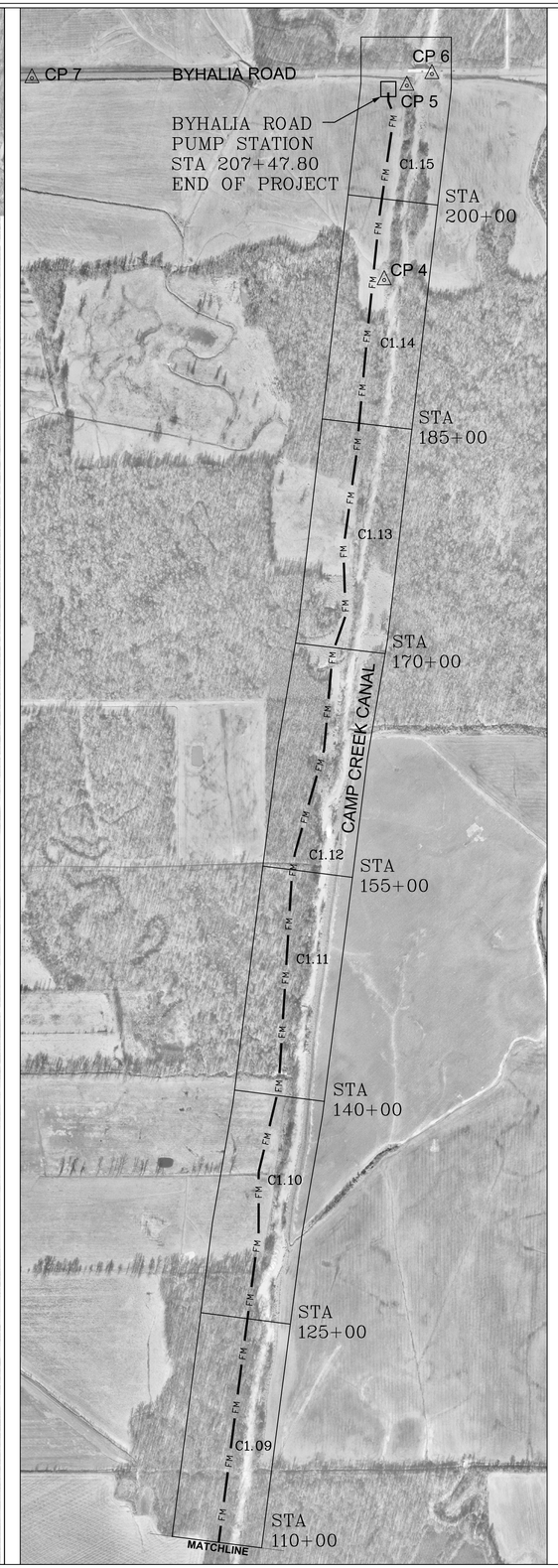

GENERAL CONSTRUCTION NOTES:

1. Any existing utility locations shown on plans are approximate only. The Contractor shall coordinate the location (horizontal and vertical) of any existing utilities within the limits of the work (power, telephone, gas, water, sewer, etc.) with the appropriate utility company before construction begins.

2. Any utility line or service line encountered during construction, whether shown on plans or not, shall be protected by the Contractor and any repairs necessary due to damage to same by the Contractor shall be at no additional cost to the Government.

3. The Contractor shall fertilize and seed all areas where the existing vegetation is removed or disturbed during construction and not required to be solid sodded, paved, or graveled.

4. All detailed construction staking will be by Contractor as an absorbed cost.

5. The Contractor shall be responsible for completing all sampling and testing of materials incorporated into the project and for submission of same to the Contracting Officer for review. Prior use test results, manufacturer's certificates, or proposed mix designs shall be submitted to the Contracting Officer for review before incorporation into project. This shall include backfill, concrete, asphalt, steel, paint, piping, fencing materials, aggregates, seed and other items as specified. All testing shall be an absorbed cost item.

6. All testing certifications shall state that the subject material meets the specified quality, grade, purity, class or weight, or that the subject material meets or exceeds the requirement of the applicable ASTM, AASHTO, MSHD or other standards. Certifications shall be submitted to the Contracting Officer prior to incorporation of the subject material into the project.

7. The Contractor shall repair or replace fences that are damaged, removed or otherwise disturbed during construction, whether shown on the plans or not. Fences shall be restored to their original condition or better using the same types of material, wire, boards, chain link, pipe, etc. as used for original construction.

8. The Contractor shall repair roadways, driveways, sidewalks, yard surfaces, curb and gutter sections, etc., disturbed during construction. Repairs shall be made by using the types of material used during original construction and to the complete satisfaction of the Contracting Officer.

9. The Contractor shall protect crops, trees, shrubbery, flowers, sod and other vegetation, not specified for removal by Drawings or Specifications, and shall repair or replace such items as are damaged during construction of project with the same types and quality as those that are damaged. Such repair or replacement shall be to the satisfaction of the Contracting Officer and the Owner of the property involved.

10. The repair or replacement of items not listed on the Bid Form for separate payment, shall be considered as incidental to the project and the cost for such items shall be included in the unit price bid for Clearing and Grubbing.

11. The limits of construction for this project, unless otherwise indicated, shall be the area within the temporary easements indicated.

STANDARD SYMBOLS:

AV	AIR VALVE HOUSING	CP	HORIZONTAL CONTROL POINT
TWH	TRACER WIRE HOUSING	TBM	TEMPORARY BENCH MARK
MP	MARKER POST	B-1	SOIL BORING

CONTROL:

CP1 – Iron rod set 1138' west of the centerline of Camp Creek Canal, and 2745' north of Holly Springs Road – ELEV 250.2
GRID N: 1931634.764
GRID E: 2428972.885

CP2 – Iron rod set 195' west of the centerline of Camp Creek Canal, and 2695' north of Holly Springs Road – ELEV 247.5
GRID N: 1931661.262
GRID E: 2429900.625

CP3 – Iron rod set 257' west of the centerline of Camp Creek Canal, and 1693' north of the northwest corner of a bridge over Camp Creek Canal on Holly Springs Road – ELEV 245.9
GRID N: 1930632.622
GRID E: 2429701.491

CP4 – Iron rod set 85' west of the centerline of Camp Creek Canal, and 1388' south of Byhalia Road – ELEV 268.4
GRID N: 1949118.252
GRID E: 2432250.691

CP5 – Iron rod set 70' west of the centerline of Camp Creek Canal, and 85' south of the southwest corner of a bridge over Camp Creek Canal on Byhalia Road – ELEV 270.6
GRID N: 1950410.240
GRID E: 2432401.111

CP6 – Iron rod with an aluminum cap stamped "WEI GPS–11" set 9' south of the southeast corner of a bridge over Camp Creek Canal on Byhalia Road – ELEV 247.1
GRID N: 1950488.521
GRID E: 2432567.438

CP7 – Iron rod with an aluminum cap stamped "WEI GPS–12" set 21' south of the centerline of Byhalia Road, and 2571' west of the centerline of Camp Creek Canal – ELEV 271.5
GRID N: 1950459.624
GRID E: 2429908.964

WAGGONER Engineering, Inc.
EAI / WEI, LLC
143-A LEFLEURS SQUARE
JACKSON, MISSISSIPPI 39211
PHONE: 601-355-9526
FAX: 601-352-3945

DESOTO COUNTY REGIONAL UTILITY AUTHORITY
LOWER CAMP CREEK FORCE MAIN
PHASE 1B, PROJECT 3
W912EQ-04-B-0002
DESOTO COUNTY, MISSISSIPPI

DRAWING REVISIONS		
NO.	REMARKS	DATE

SEAL:

DRAWN BY: BBW	SCALE: AS SHOWN
DESIGNED BY: BBW/TMH	DATE: 07/10/03
CHECKED BY: TMH	PROJECT: D00064

DWG NAME:
DRAWING TITLE:
LOWER CAMP CREEK FORCE MAIN AND CONTROL LAYOUT PLAN

SHEET NUMBER:
C1.00

NO.	DATE	REVISIONS	BY

DESIGNED B.W. | DATE 07/10/03
REVIEWED T.H. | SCALE 1"=50' HORT. 1"= 5' VERT.

EAI / WEI, LLC
143-A LEFLEURS SQUARE
JACKSON, MISSISSIPPI 39211
PHONE: 601-355-9526 FAX: 601-352-3945

DESOTO COUNTY REGIONAL UTILITY AUTHORITY
W912EQ-04-B-0002
DESOTO COUNTY, MISSISSIPPI

PLAN/PROFILE SHEET (STA 0+00 - STA 12+00)
LOWER CAMP CREEK FORCE MAIN
PHASE 1B, PROJECT 3

ACAD PATH ROUTE
E:\Desoto Co.-DCRUA\D00064\4-Engineering\D00064\Dwg

W.E.I. JOB NO. *D00064*
SHEET NO. *C1.01*

MATCH LINE STA. 12+00

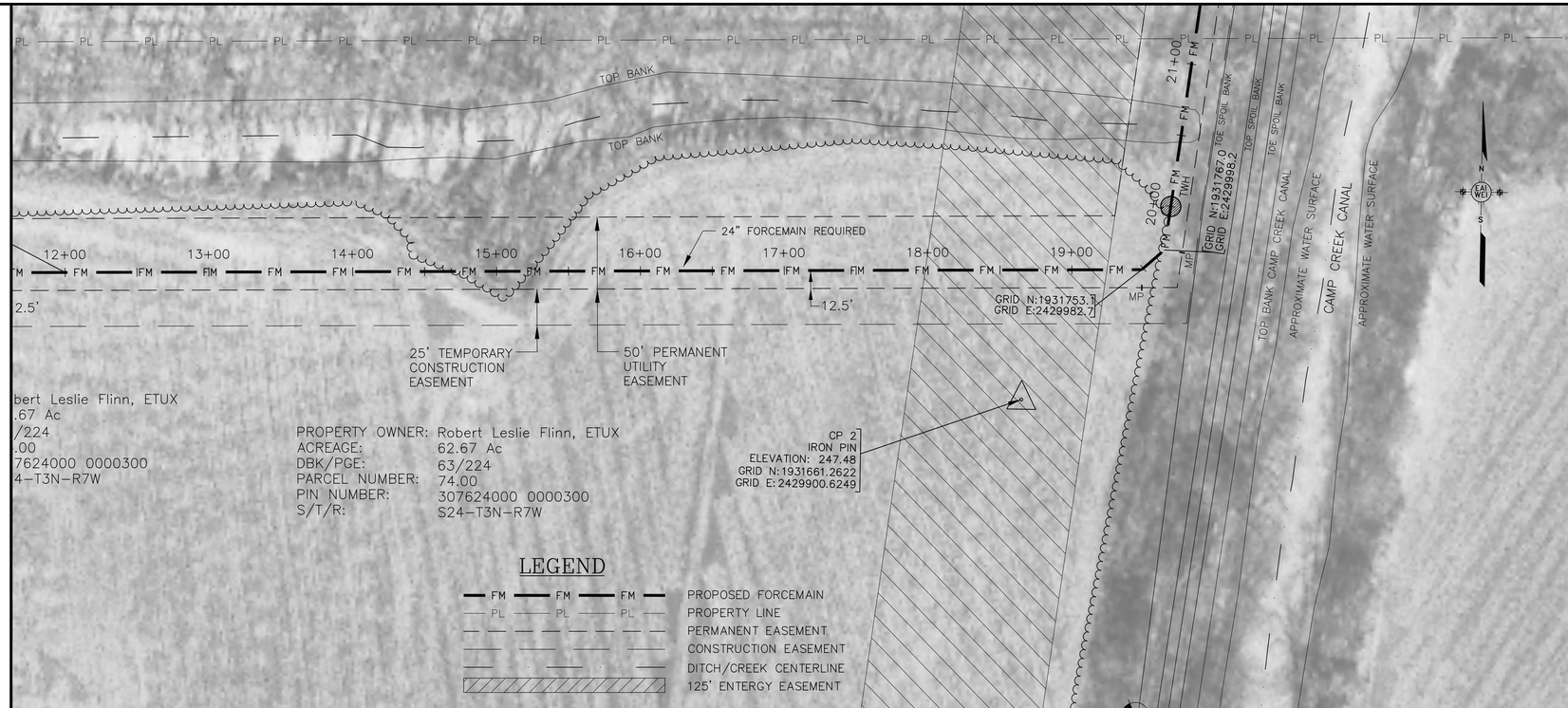

MATCH LINE STA. 19+69.47

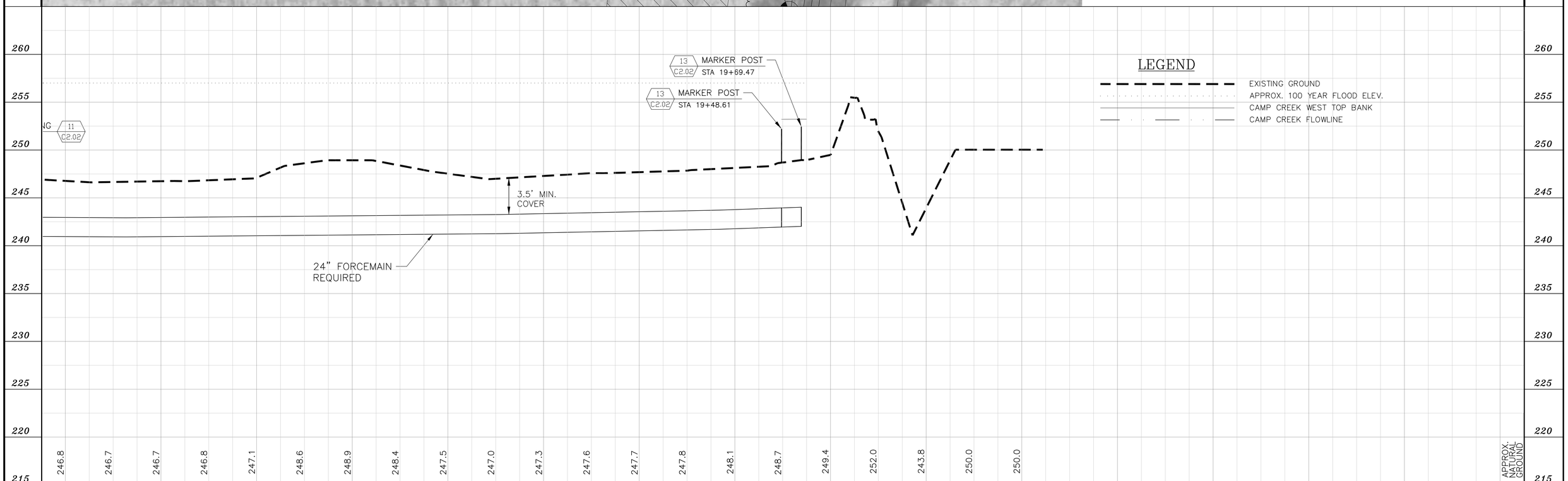

NO.	DATE	REVISIONS	BY

DESIGNED B.W. | DATE 07/10/03
REVIEWED T.H. | SCALE 1"=50' HORT. 1"= 5' VERT.

EAI / WEI, LLC
143-A LEFLEURS SQUARE
JACKSON, MISSISSIPPI 39211
PHONE: 601-355-9526 FAX: 601-352-3945

DESOTO COUNTY REGIONAL UTILITY AUTHORITY
W912EQ-04-B-0002
DESOTO COUNTY, MISSISSIPPI

PLAN/PROFILE SHEET (STA 12+00 - STA 19+69.47)
LOWER CAMP CREEK FORCE MAIN
PHASE 1B, PROJECT 3

ACAD PATH ROUTE
E:\Desoto Co.-DCRUA\D00064\4-Engineering\D00064\Dwg
W.E.I. JOB NO. *D00064*
SHEET NO. *C1.02*

MATCH LINE STA. 19+69.47

MATCH LINE STA. 35+00

PROPERTY OWNER: Barry W. Bridgforth, ETUX
ACREAGE: 317.69 Ac
DBK/PGE: 295/7
PARCEL NUMBER: 67.00
PIN NUMBER: 307624000 0000100
S/T/R: S24-T3N-R7W

TBM#42 Elevation: 249.86'
Cotton-picker spindle set in the east side of a 12" gum tree.

50' PERMANENT UTILITY EASEMENT

TBM#47 Elevation: 251.78'
Cotton-picker spindle set in the east side of a 10" maple tree.

GRID N:1932739.6
GRID E:2430123.3

24" FORCEMAIN REQUIRED

12.5'

20+00 21+00 22+00 23+00 24+00 25+00 26+00 27+00 28+00 29+00 30+00 31+00 32+00 33+00 34+00 35+00

TWH AV

GRID N:1931767.0
GRID E:2429998.2

TEMP CONST ESMT

TOE SPOIL BANK
TOP SPOIL BANK
TOE SPOIL BANK
TOE SPOIL BANK
TOP BANK CAMP CREEK CANAL

APPROXIMATE WATER SURFACE

CAMP CREEK CANAL

APPROXIMATE WATER SURFACE

LEGEND

- PROPOSED FORCEMAIN
- PROPERTY LINE
- PERMANENT EASEMENT
- CONSTRUCTION EASEMENT
- DITCH/CREEK CENTERLINE
- 125' ENTERGY EASEMENT

LEGEND

- EXISTING GROUND
- APPROX. 100 YEAR FLOOD ELEV.
- CAMP CREEK WEST TOP BANK
- CAMP CREEK FLOWLINE

TRACER WIRE HOUSING
STA 20+00
11 / C2.02

2" WASTEWATER SINGLE BODY COMBINATION AIR VALVE
RIM=253.5
VENT=258.0
17 / C2.02

11 / C2.02 TRACER WIRE HOUSING
STA 30+00

3.5' MIN. COVER

24" FORCEMAIN REQUIRED

260 255 250 245 240 235 230 225 220 215

249.0 249.2 249.2 249.3 249.5 249.9 249.2 249.6 249.7 249.3 249.3 249.4 249.5 249.3 249.3 249.6 249.7 249.6 249.3 249.5 250.1 250.1 249.7 249.8 249.9 250.1 250.3 250.4 250.7 250.9 251.0 APPROX. NATURAL GROUND

20+00 21+00 22+00 23+00 24+00 25+00 26+00 27+00 28+00 29+00 30+00 31+00 32+00 33+00 34+00 35+00

NO.	DATE	REVISIONS	BY

DESIGNED B.W. | DATE 07/10/03
REVIEWED T.H. | SCALE 1"=50' HORT. 1"= 5' VERT.

EAI / WEI, LLC
143-A LEFLEURS SQUARE
JACKSON, MISSISSIPPI 39211
PHONE: 601-355-9526 FAX: 601-352-3945

DESOTO COUNTY REGIONAL UTILITY AUTHORITY
W912EQ-04-B-0002
DESOTO COUNTY, MISSISSIPPI

PLAN/PROFILE SHEET (STA 19+69.47 - STA 35+00)
LOWER CAMP CREEK FORCE MAIN
PHASE 1B, PROJECT 3

ACAD PATH ROUTE
E:\Desoto Co.-DCRUA\D00064\4-Engineering\D00064\Dwg
W.E.I. JOB NO. *D00064*
SHEET NO. *C1.03*

MATCH LINE STA. 35+00

MATCH LINE STA. 50+00

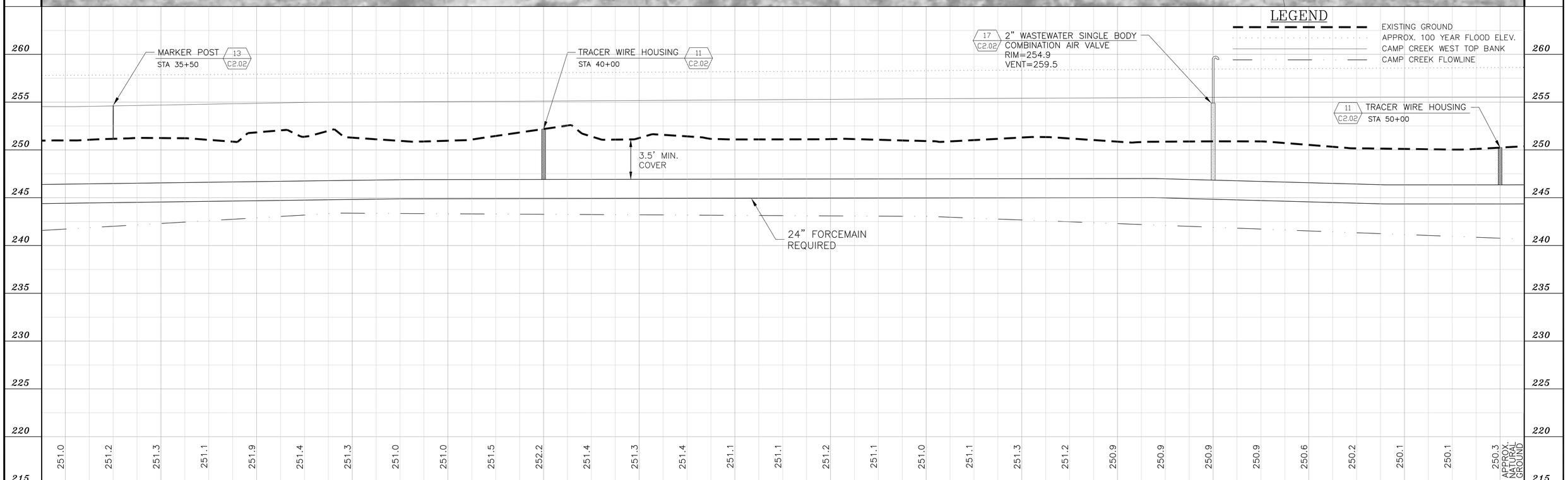

NO.	DATE	REVISIONS	BY

DESIGNED	DATE
B.W.	07/10/03
REVIEWED	SCALE
T.H.	1"=50' HORT. 1"= 5' VERT.

EAI / WEI, LLC
143-A LEFLEURS SQUARE
JACKSON, MISSISSIPPI 39211
PHONE: 601-355-9526 FAX: 601-352-3945

DESOTO COUNTY REGIONAL UTILITY AUTHORITY
W912EQ-04-B-0002
DESOTO COUNTY, MISSISSIPPI

PLAN/PROFILE SHEET (STA 35+00 - STA 50+00)
LOWER CAMP CREEK FORCE MAIN
PHASE 1B, PROJECT 3

ACAD PATH ROUTE
E:\Desoto Co.-DCRUA\D00064\4-Engineering\D00064\Dwg

W.E.I. JOB NO.	SHEET NO.
D00064	***C1.04***

MATCH LINE STA. 50+00

MATCH LINE STA. 65+00

PROPERTY OWNER: Betty B. Whitten Jenkins
ACREAGE: 239.45 Ac
DBK/PGE: WB 23/327
PARCEL NUMBER: 56.00
PIN NUMBER: 307613000 0000500
S/T/R: S13-T3N-R7W

TBM#44 Elevation: 250.83'
Cotton-picker spindle set in the east side of a 18" gum tree.

TBM#45 Elevation: 251.93'
Cotton-picker spindle set in the east side of a 18" oak tree.

50' PERMANENT UTILITY EASEMENT

24" FORCEMAIN REQUIRED

GRID N:1935715.1
GRID E:2430505.9

50+00 51+00 52+00 53+00 54+00 55+00 56+00 57+00 12.5' 58+00 59+00 60+00 61+00 62+00 63+00 64+00 65+00

TWH MP

TEMP CONST ESMT

TOE SPOIL BANK
TOP SPOIL BANK
TOE SPOIL BANK

APPROX. TOP BANK CAMP CREEK CANAL
APPROXIMATE WATER SURFACE
APPROXIMATE WATER SURFACE

CAMP CREEK CANAL

LEGEND

- PROPOSED FORCEMAIN
- PROPERTY LINE
- PERMANENT EASEMENT
- CONSTRUCTION EASEMENT
- DITCH/CREEK CENTERLINE
- 125' ENTERGY EASEMENT

LEGEND

- EXISTING GROUND
- APPROX. 100 YEAR FLOOD ELEV.
- CAMP CREEK WEST TOP BANK
- CAMP CREEK FLOWLINE

MARKER POST 13 C2.02
STA 62+50

TRACER WIRE HOUSING 11 C2.02
STA 60+00

3.5' MIN. COVER

24" FORCEMAIN REQUIRED

260 255 250 245 240 235 230 225 220 215

250.3 250.3 250.2 250.2 250.4 250.4 250.2 250.3 250.5 250.7 250.9 251.1 251.2 251.0 250.8 250.7 250.8 250.6 250.5 250.3 250.2 250.2 250.2 250.2 250.0 250.6 250.9 250.7 250.8 250.9 251.0 APPROX. NATURAL GROUND

50+00 51+00 52+00 53+00 54+00 55+00 56+00 57+00 58+00 59+00 60+00 61+00 62+00 63+00 64+00 65+00

NO.	DATE	REVISIONS	BY

DESIGNED B.W. | DATE 07/10/03
REVIEWED T.H. | SCALE 1"=50' HORT. 1"= 5' VERT.

EAI / WEL, LLC
143-A LEFLEURS SQUARE
JACKSON, MISSISSIPPI 39211
PHONE: 601-355-9526 FAX: 601-352-3945

DESOTO COUNTY REGIONAL UTILITY AUTHORITY
W912EQ-04-B-0002
DESOTO COUNTY, MISSISSIPPI

PLAN/PROFILE SHEET (STA 50+00 - STA 65+00)
LOWER CAMP CREEK FORCE MAIN
PHASE 1B, PROJECT 3

ACAD PATH ROUTE
E:\Desoto Co.-DCRUA\D00064\4-Engineering\D00064\Dwg

W.E.I. JOB NO. *D00064*
SHEET NO. *C1.05*

MATCH LINE STA. 65+00

MATCH LINE STA. 80+00

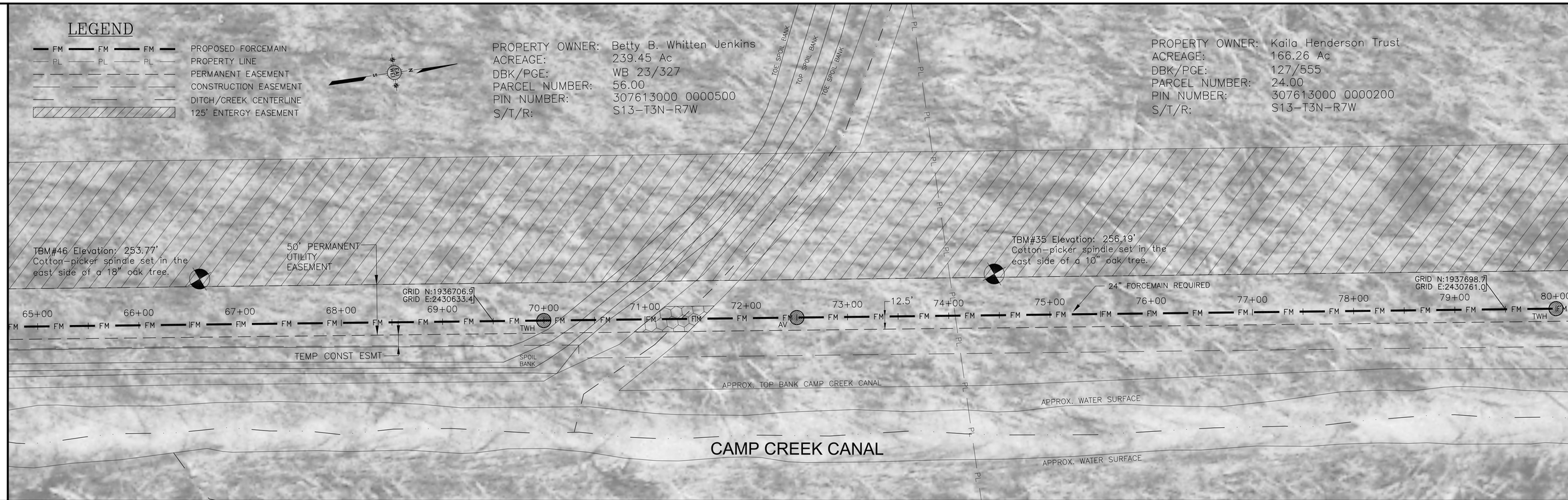

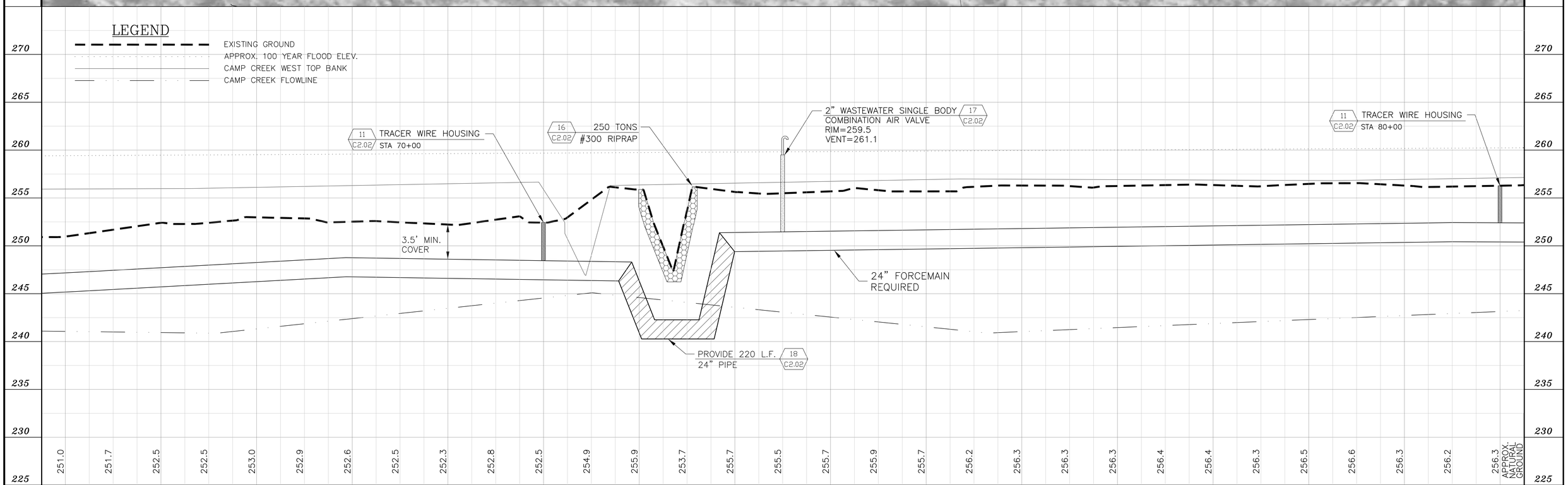

NO.	DATE	REVISIONS	BY

DESIGNED B.W. | DATE 07/10/03
REVIEWED T.H. | SCALE 1"=50' HORT. 1"= 5' VERT.

EAI / WEI, LLC
143-A LEFLEURS SQUARE
JACKSON, MISSISSIPPI 39211
PHONE: 601-355-9526 FAX: 601-352-3945

DESOTO COUNTY REGIONAL UTILITY AUTHORITY
W912EQ-04-B-0002
DESOTO COUNTY, MISSISSIPPI

PLAN/PROFILE SHEET (STA 65+00 - STA 80+00)
LOWER CAMP CREEK FORCE MAIN
PHASE 1B, PROJECT 3

ACAD PATH ROUTE
E:\Desoto Co.-DCRUA\D00064\4-Engineering\D00064\Dwg

W.E.I. JOB NO. *D00064*

SHEET NO. *C1.06*

MATCH LINE STA. 80+00

MATCH LINE STA. 95+00

LEGEND

- FM — PROPOSED FORCEMAIN
- PL — PROPERTY LINE
- PERMANENT EASEMENT
- CONSTRUCTION EASEMENT
- DITCH/CREEK CENTERLINE
- 125' ENTERGY EASEMENT

PROPERTY OWNER: Kaila Henderson Trust
ACREAGE: 166.26 Ac
DBK/PGE: 127/555
PARCEL NUMBER: 24.00
PIN NUMBER: 307613000 0000200
S/T/R: S13-T3N-R7W

PROPERTY OWNER: Sandra Scott Childers
ACREAGE: 82.21 Ac
DBK/PGE: 397/233
PARCEL NUMBER: 14.00
PIN NUMBER: 307613000 0000100
S/T/R: S13-T3N-R7W

50' PERMANENT UTILITY EASEMENT

24" FORCEMAIN REQUIRED

GRID N:1938690.6
GRID E:2430888.5

80+00 TWH, 81+00, 82+00 MP, 83+00, 84+00, 85+00, 86+00, 12.5', 87+00, 88+00, 89+00, 90+00 TWH, 91+00, 92+00 MP, 93+00, 94+00, 95+00

APPROX. TOP BANK CAMP CREEK CANAL

25' TEMPORARY CONSTRUCTION EASEMENT

TBM#33 Elevation: 260.10'
Cotton-picker spindle set in the west side of a 14" wild pecan tree, and 20'± west of the west top bank of Camp Creek Canal.

APPROX. WATER SURFACE

CAMP CREEK CANAL

APPROX. WATER SURFACE

TBM#34 Elevation: 259.56'
Cotton-picker spindle set in the west side of a 10" hickory tree, and in the the west top bank of Camp Creek Canal.

LEGEND

- EXISTING GROUND
- APPROX. 100 YEAR FLOOD ELEV.
- CAMP CREEK WEST TOP BANK
- CAMP CREEK FLOWLINE

MARKER POST 13 C2.02 STA 81+50

11 C2.02 TRACER WIRE HOUSING STA 90+00

MARKER POST 13 C2.02 STA 91+50

3.5' MIN. COVER

24" FORCEMAIN REQUIRED

270 265 260 255 250 245 240 235 230 225

256.3 256.5 256.6 256.8 256.8 256.7 257.1 257.0 256.9 256.9 257.0 257.0 256.8 256.6 256.3 256.3 256.1 256.7 256.8 257.2 257.5 257.3 257.4 257.6 257.8 257.9 257.7 257.6 257.6 257.5 257.7 APPROX. NATURAL GROUND

80+00 81+00 82+00 83+00 84+00 85+00 86+00 87+00 88+00 89+00 90+00 91+00 92+00 93+00 94+00 95+00

NO.	DATE	REVISIONS	BY

DESIGNED B.W. | DATE 07/10/03
REVIEWED T.H. | SCALE 1"=50' HORT. 1"= 5' VERT.

EAI / WEI, LLC
143-A LEFLEURS SQUARE
JACKSON, MISSISSIPPI 39211
PHONE: 601-355-9526 FAX: 601-352-3945

DESOTO COUNTY REGIONAL UTILITY AUTHORITY
W912EQ-04-B-0002
DESOTO COUNTY, MISSISSIPPI

PLAN/PROFILE SHEET (STA 80+00 - STA 95+00)
LOWER CAMP CREEK FORCE MAIN
PHASE 1B, PROJECT 3

ACAD PATH ROUTE
E:\Desoto Co.-DCRUA\D00064\4-Engineering\D00064\Dwg

W.E.I. JOB NO. *D00064*

SHEET NO. *C1.07*

MATCH LINE STA. 95+00

PROPERTY OWNER: George A. Scott, ETUX
ACREAGE: 73.54 Ac
DBK/PGE: 151/585
PARCEL NUMBER: 2.00
PIN NUMBER: 307613000 0000101
S/T/R: S13-T3N-R7W

PROPERTY OWNER: Joe Eli Lauderdale
ACREAGE: 160.52 Ac
DBK/PGE: 157/641
PARCEL NUMBER: 119.00
PIN NUMBER: 307112000 0000700
S/T/R: S12-T3N-R7W

LEGEND

- PROPOSED FORCEMAIN
- PROPERTY LINE
- PERMANENT EASEMENT
- CONSTRUCTION EASEMENT
- DITCH/CREEK CENTERLINE
- 125' ENTERGY EASEMENT

TBM#32 Elevation: 259.93'
Cotton-picker spindle set in the east side of a 16" poplar tree.

GRID N:1939682.4
GRID E:2431016.0

24" FORCEMAIN REQUIRED

50' PERMANENT UTILITY EASEMENT

25' TEMPORARY CONSTRUCTION EASEMENT

TBM#31 Elevation: 260.60'
Cotton-picker spindle set in the west side of a river birch tree, and the west top bank of Camp Creek Canal.

95+00 96+00 97+00 98+00 99+00 100+00 101+00 102+00 12.5' 103+00 104+00 105+00 106+00 107+00 108+00 109+00 110+00

MP GUM TREE AV TWH MP TWH

APPROX. TOP BANK CAMP CREEK CANAL

APPROX. WATER SURFACE

EXISTING SWINGING BRIDGE

CAMP CREEK CANAL

APPROX. WATER SURFACE

MATCH LINE STA. 110+00

LEGEND

- EXISTING GROUND
- APPROX. 100 YEAR FLOOD ELEV.
- CAMP CREEK WEST TOP BANK
- CAMP CREEK FLOWLINE

13 C2.02 MARKER POST STA 97+50

16 C2.02 230 TONS #300 RIPRAP

2" WASTEWATER SINGLE BODY COMBINATION AIR VALVE 17 C2.02
RIM=261.9
VENT=263.4

TRACER WIRE HOUSING STA 100+50 11 C2.02

11 C2.02 TRACER WIRE HOUSING STA 110+00

13 C2.02 MARKER POST STA 108+50

3.5' MIN. COVER

24" FORCEMAIN REQUIRED

PROVIDE 290 L.F. 24" PIPE 18 C2.02

275 270 265 260 255 250 245 240 235 230

257.7 257.9 258.0 258.2 258.2 258.9 259.0 258.5 258.0 258.0 257.9 257.2 256.7 256.7 256.9 257.4 257.7 257.9 258.0 258.1 257.9 257.8 257.9 258.1 258.1 258.4 258.6 258.5 258.5 258.7 258.8 APPROX. NATURAL GROUND

95+00 96+00 97+00 98+00 99+00 100+00 101+00 102+00 103+00 104+00 105+00 106+00 107+00 108+00 109+00 110+00

NO.	DATE	REVISIONS	BY

DESIGNED B.W. | DATE 07/10/03
REVIEWED T.H. | SCALE 1"=50' HORT. 1"= 5' VERT.

EAI / WEI, LLC
143-A LEFLEURS SQUARE
JACKSON, MISSISSIPPI 39211
PHONE: 601-355-9526 FAX: 601-352-3945

DESOTO COUNTY REGIONAL UTILITY AUTHORITY
W912EQ-04-B-0002
DESOTO COUNTY, MISSISSIPPI

PLAN/PROFILE SHEET (STA 95+00 - STA 110+00)
LOWER CAMP CREEK FORCE MAIN
PHASE 1B, PROJECT 3

ACAD PATH ROUTE
E:\Desoto Co.-DCRUA\D00064\4-Engineering\D00064\Dwg

W.E.I. JOB NO. *D00064*

SHEET NO. *C1.08*

MATCH LINE STA. 110+00

MATCH LINE STA. 125+00

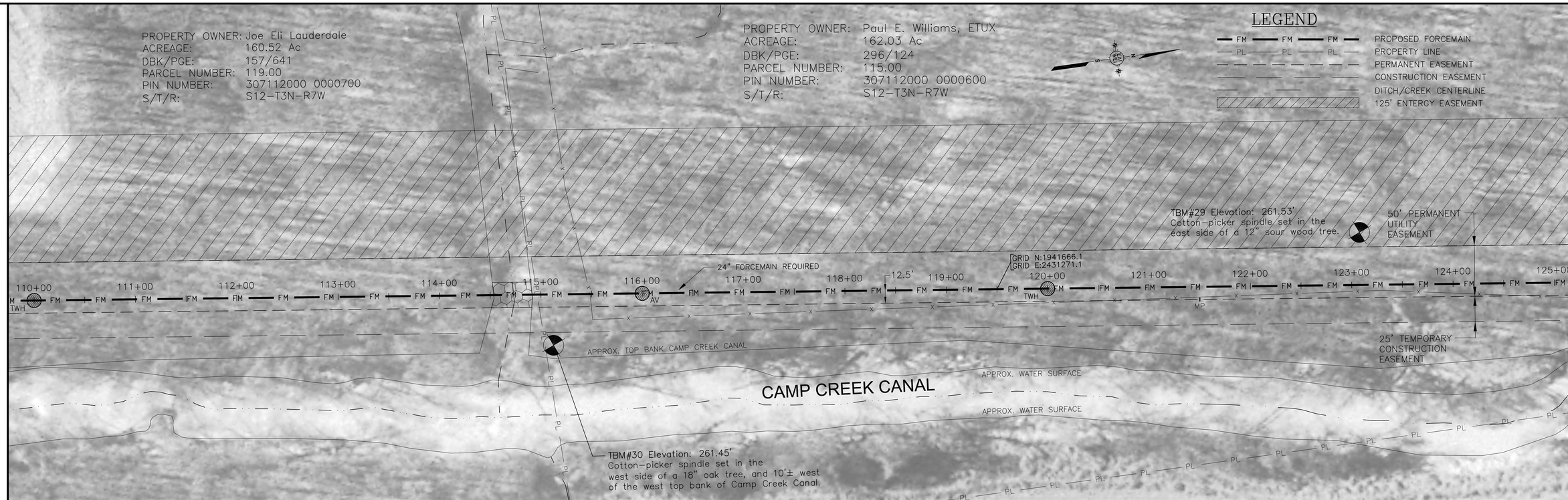

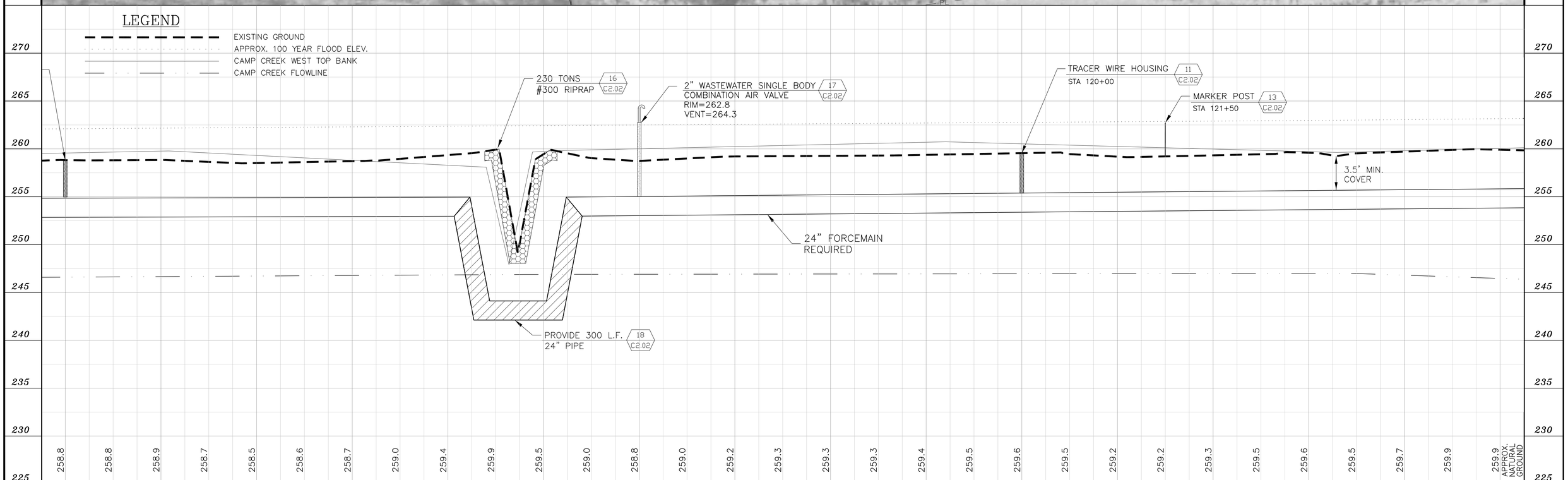

NO.	DATE	REVISIONS	BY

DESIGNED B.W. | DATE 07/10/03 | REVIEWED T.H. | SCALE 1"=50' HORT. 1"= 5' VERT.

EAI / WEI, LLC
143-A LEFLEURS SQUARE
JACKSON, MISSISSIPPI 39211
PHONE: 601-355-9526 FAX: 601-352-3945

DESOTO COUNTY REGIONAL UTILITY AUTHORITY
W912EQ-04-B-0002
DESOTO COUNTY, MISSISSIPPI

PLAN/PROFILE SHEET (STA 110+00 - STA 125+00)
LOWER CAMP CREEK FORCE MAIN
PHASE 1B, PROJECT 3

ACAD PATH ROUTE
E:\Desoto Co.-DCRUA\D00064\4-Engineering\D00064\Dwg

W.E.I. JOB NO. *D00064*

SHEET NO. *C1.09*

MATCH LINE STA. 125+00

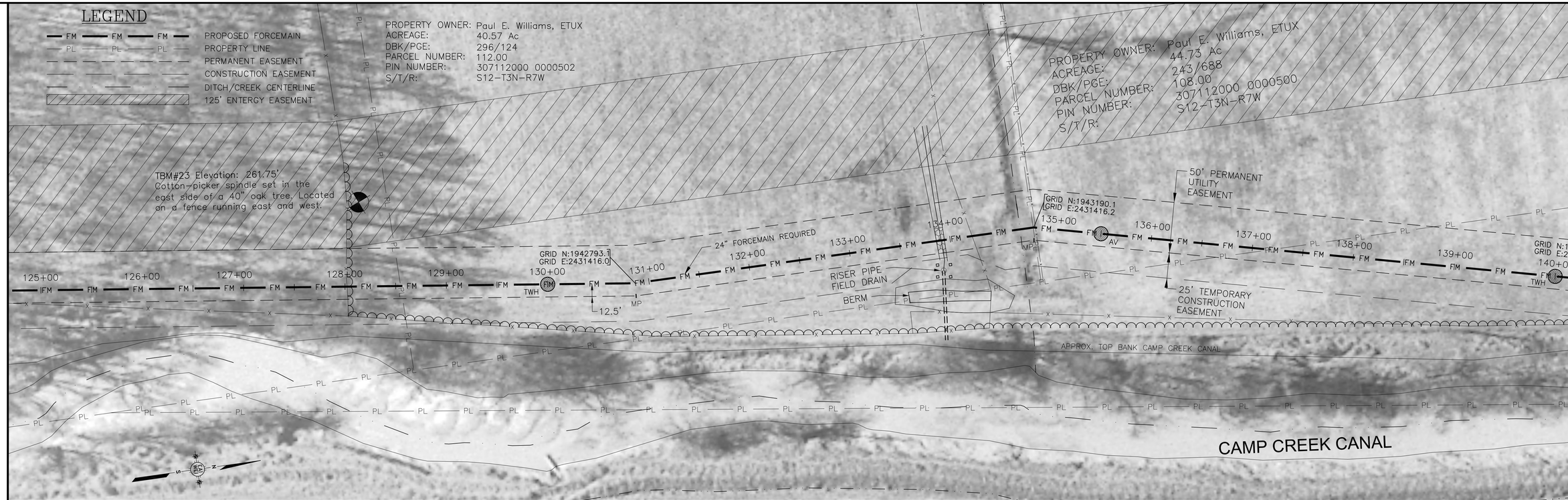

MATCH LINE STA. 140+00

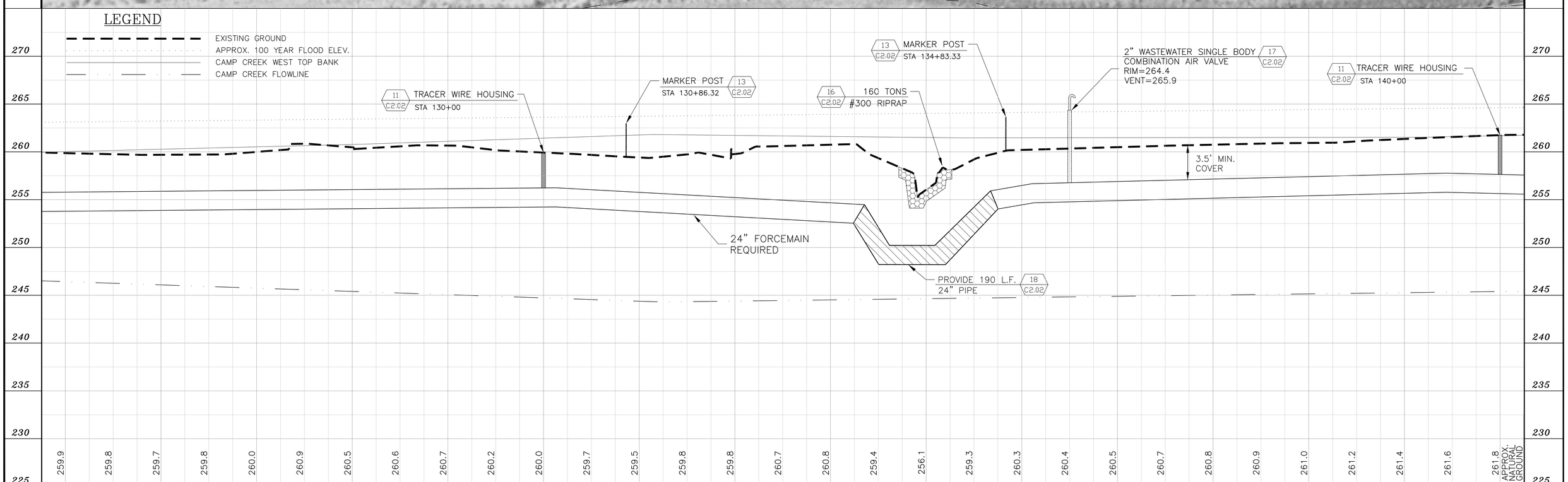

NO.	DATE	REVISIONS	BY

DESIGNED B.W. | DATE 07/10/03
REVIEWED T.H. | SCALE 1"=50' HORT. 1"= 5' VERT.

EAI / WEI, LLC
143-A LEFLEURS SQUARE
JACKSON, MISSISSIPPI 39211
PHONE: 601-355-9526 FAX: 601-352-3945

DESOTO COUNTY REGIONAL UTILITY AUTHORITY
W912EQ-04-B-0002
DESOTO COUNTY, MISSISSIPPI

PLAN/PROFILE SHEET (STA 125+00 - STA 140+00)
LOWER CAMP CREEK FORCE MAIN
PHASE 1B, PROJECT 3

ACAD PATH ROUTE
E:\Desoto Co.-DCRUA\D00064\4-Engineering\D00064\Dwg

W.E.I. JOB NO. *D00064*

SHEET NO. *C1.10*

MATCH LINE STA. 140+00

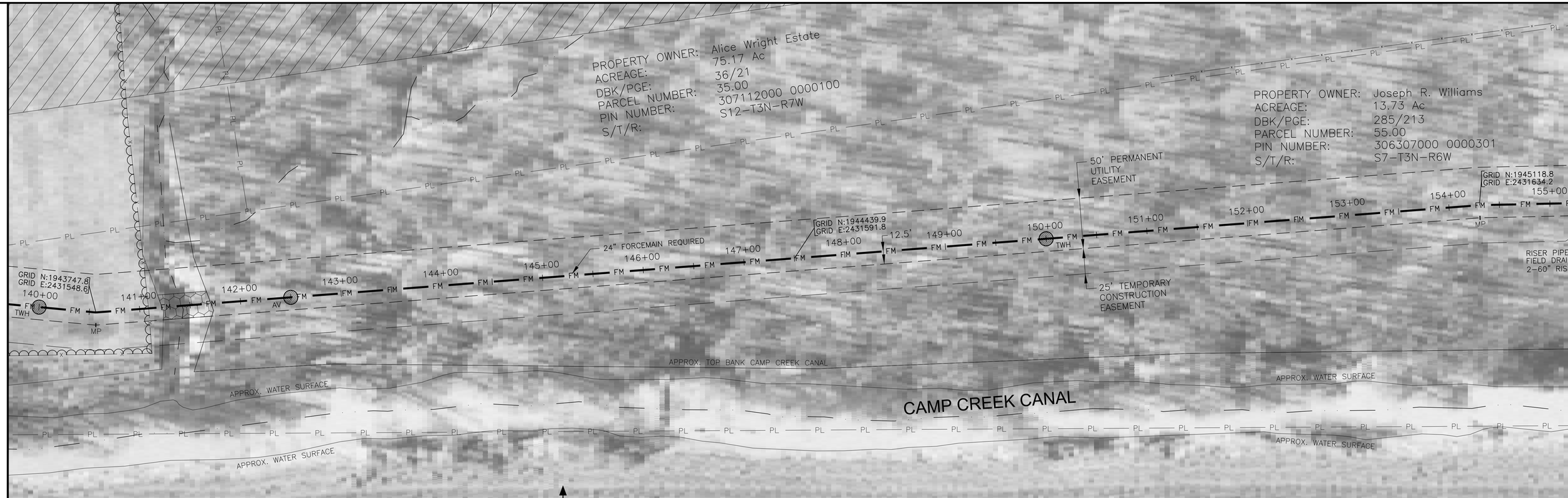

MATCH LINE STA. 155+00

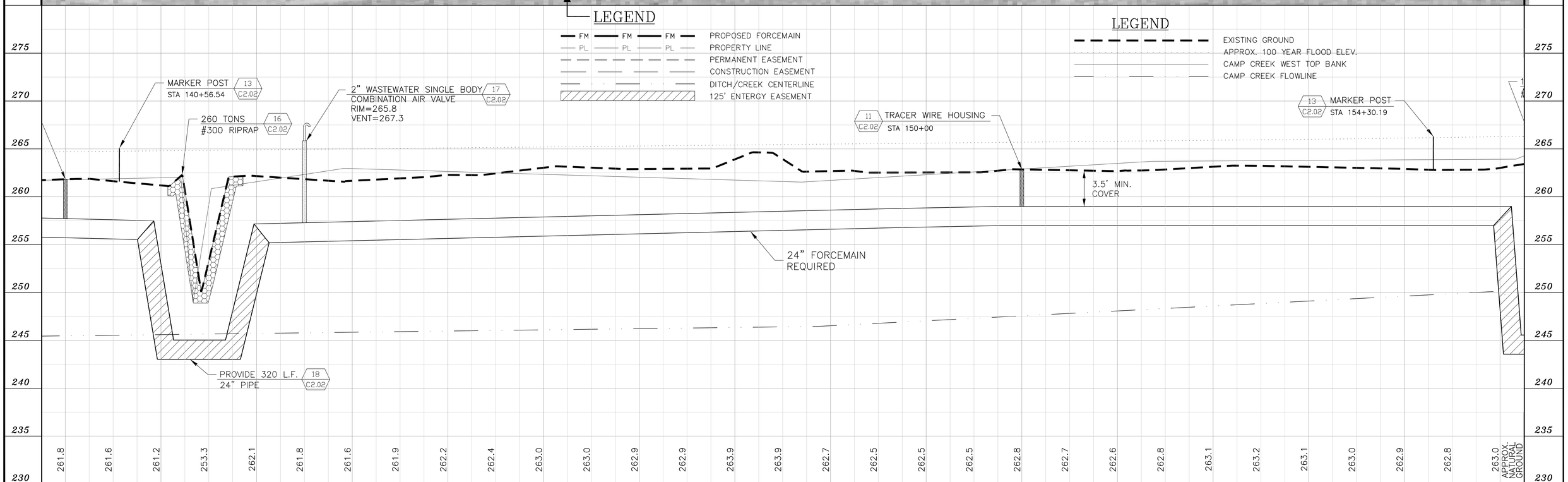

NO.	DATE	REVISIONS	BY

DESIGNED B.W. | DATE 07/10/03
REVIEWED T.H. | SCALE 1"=50' HORT. 1"= 5' VERT.

EAI / WEI, LLC
143-A LEFLEURS SQUARE
JACKSON, MISSISSIPPI 39211
PHONE: 601-355-9526 FAX: 601-352-3945

DESOTO COUNTY REGIONAL UTILITY AUTHORITY
W912EQ-04-B-0002
DESOTO COUNTY, MISSISSIPPI

PLAN/PROFILE SHEET (STA 140+00 - STA 155+00)
LOWER CAMP CREEK FORCE MAIN
PHASE 1B, PROJECT 3

ACAD PATH ROUTE
E:\Desoto Co.-DCRUA\D00064\4-Engineering\D00064\Dwg

W.E.I. JOB NO. *D00064*

SHEET NO. *C1.11*

MATCH LINE STA. 155+00

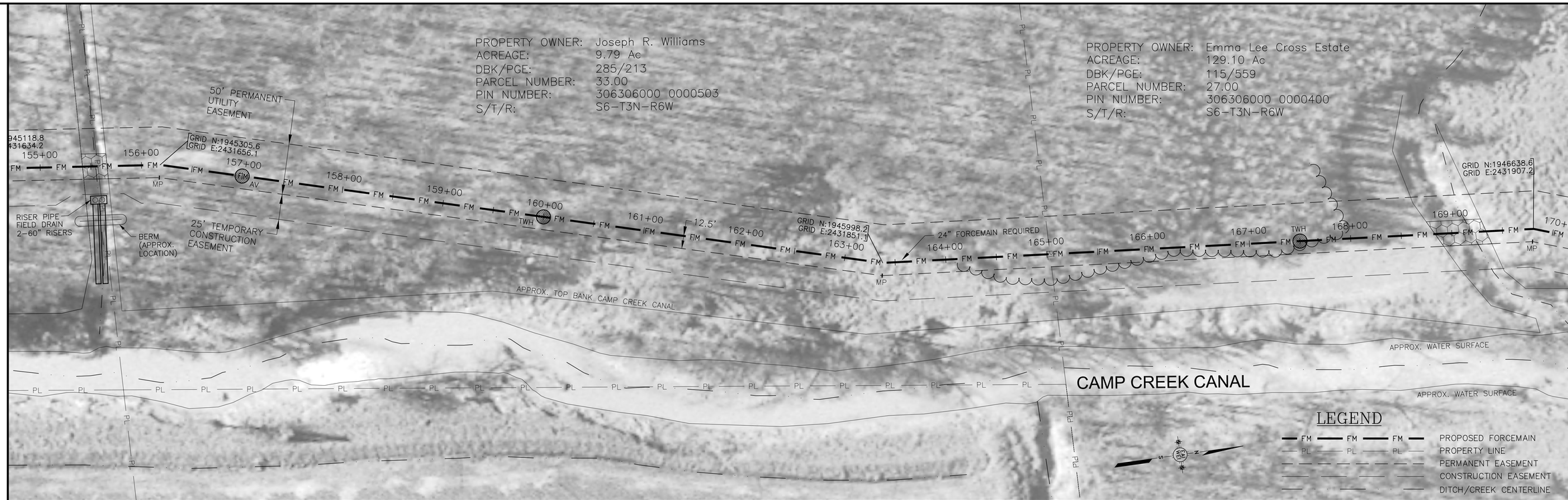

MATCH LINE STA. 170+00

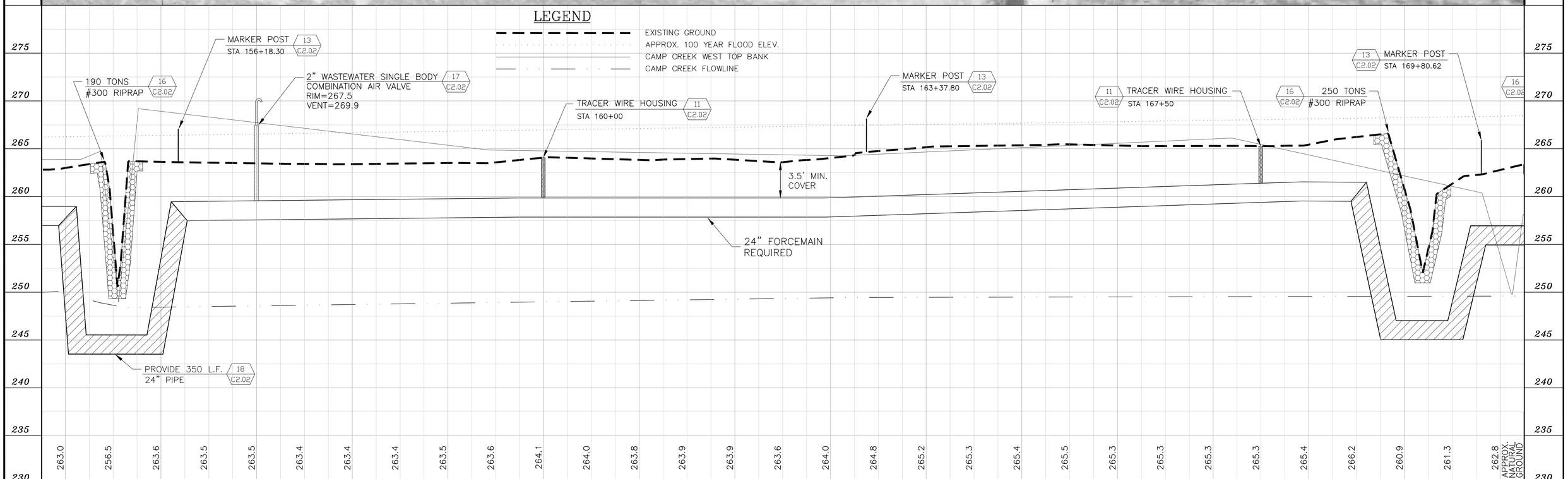

NO.	DATE	REVISIONS	BY

DESIGNED B.W. | DATE 07/10/03
REVIEWED T.H. | SCALE 1"=50' HORT. 1"= 5' VERT.

EAI / WEI, LLC
143-A LEFLEURS SQUARE
JACKSON, MISSISSIPPI 39211
PHONE: 601-355-9526 FAX: 601-352-3945

DESOTO COUNTY REGIONAL UTILITY AUTHORITY
W912EQ-04-B-0002
DESOTO COUNTY, MISSISSIPPI

PLAN/PROFILE SHEET (STA 155+00 - STA 170+00)
LOWER CAMP CREEK FORCE MAIN
PHASE 1B, PROJECT 3

ACAD PATH ROUTE
E:\Desoto Co.-DCRUA\D00064\4-Engineering\D00064\Dwg
W.E.I. JOB NO. *D00064*
SHEET NO. *C1.12*

MATCH LINE STA. 170+00

MATCH LINE STA. 185+00

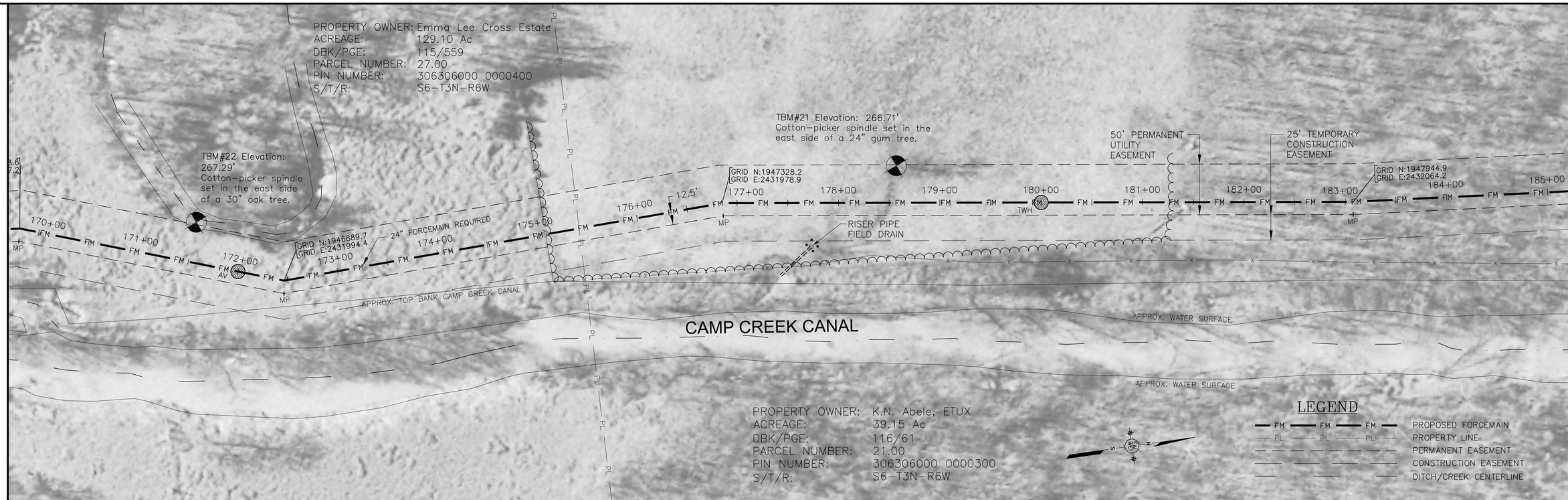

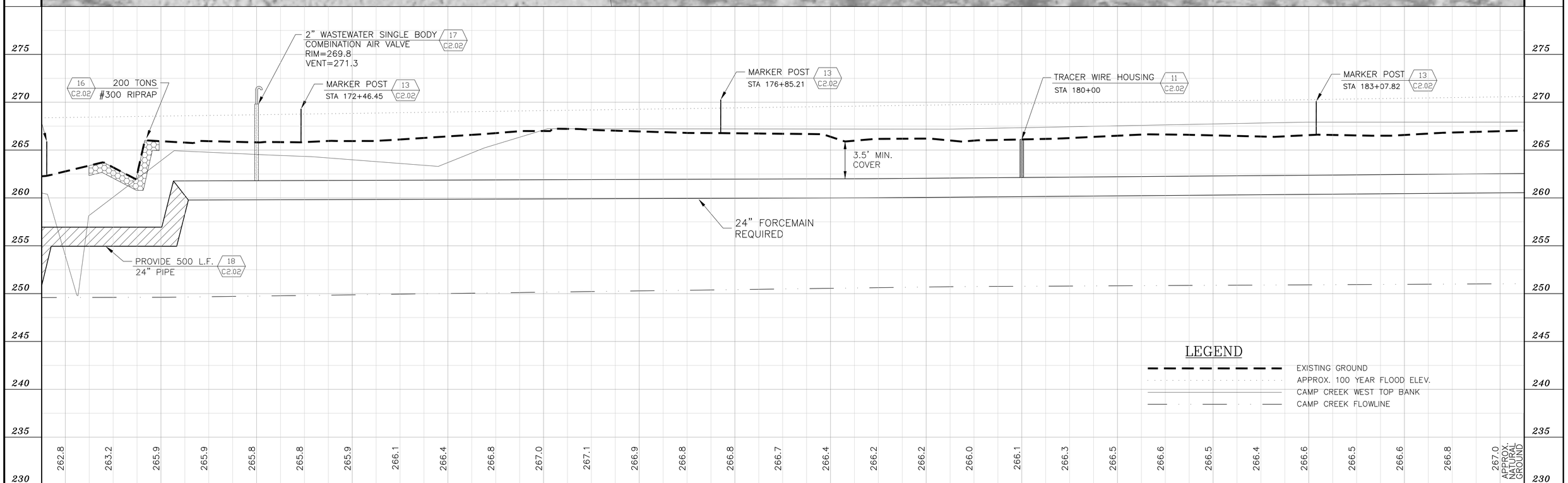

NO.	DATE	REVISIONS	BY

DESIGNED B.W. | DATE 07/10/03
REVIEWED T.H. | SCALE 1"=50' HORT. 1"= 5' VERT.

EAI / WEI, LLC
143-A LEFLEURS SQUARE
JACKSON, MISSISSIPPI 39211
PHONE: 601-355-9526 FAX: 601-352-3945

DESOTO COUNTY REGIONAL UTILITY AUTHORITY
W912EQ-04-B-0002
DESOTO COUNTY, MISSISSIPPI

PLAN/PROFILE SHEET (STA 170+00 - STA 185+00)
LOWER CAMP CREEK FORCE MAIN
PHASE 1B, PROJECT 3

ACAD PATH ROUTE
E:\Desoto Co.-DCRUA\D00064\4-Engineering\D00064\Dwg

W.E.I. JOB NO. *D00064*

SHEET NO. *C1.13*

MATCH LINE STA. 185+00

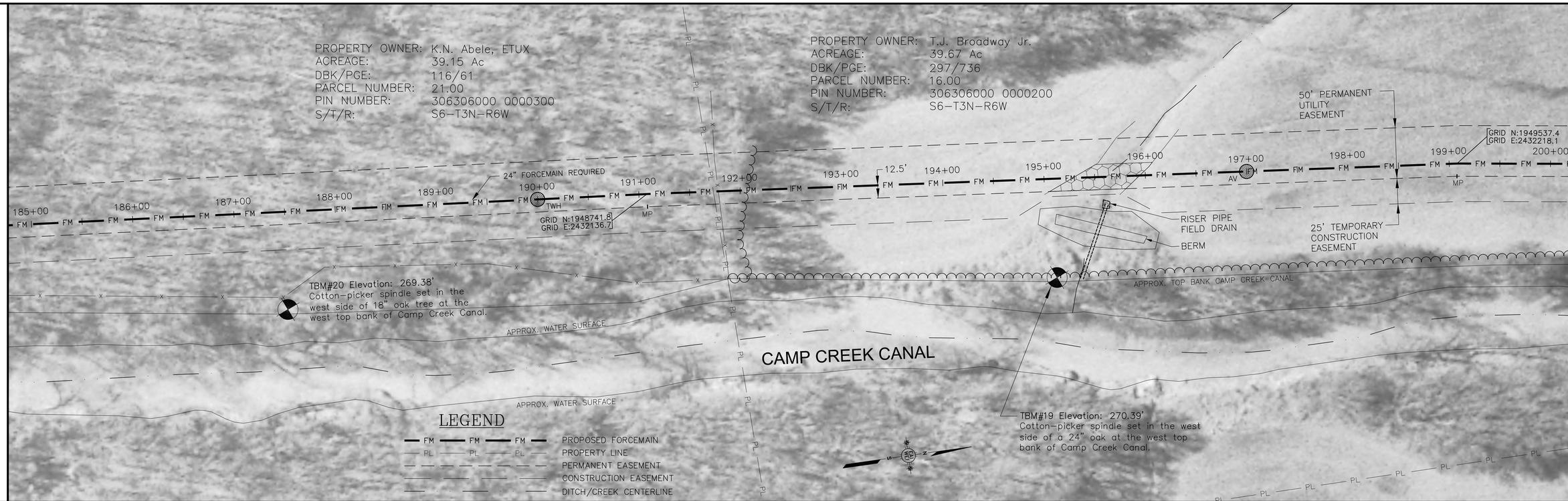

MATCH LINE STA. 200+00

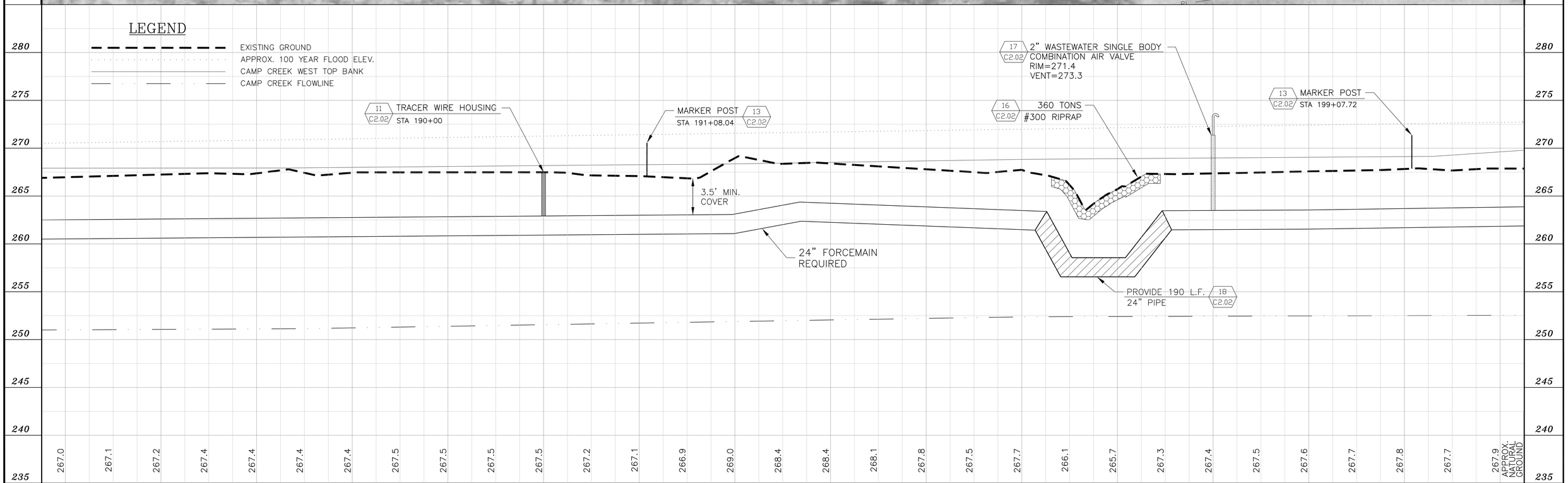

NO.	DATE	REVISIONS	BY

DESIGNED B.W. | DATE 07/10/03
REVIEWED T.H. | SCALE 1"=50' HORT. 1"= 5' VERT.

EAI / WEI, LLC
143-A LEFLEURS SQUARE
JACKSON, MISSISSIPPI 39211
PHONE: 601-355-9526 FAX: 601-352-3945

DESOTO COUNTY REGIONAL UTILITY AUTHORITY
W912EQ-04-B-0002
DESOTO COUNTY, MISSISSIPPI

PLAN/PROFILE SHEET (STA 185+00 - STA 200+00)
LOWER CAMP CREEK FORCE MAIN
PHASE 1B, PROJECT 3

ACAD PATH ROUTE
E:\Desoto Co.-DCRUA\D00064\4-Engineering\D00064\Dwg
W.E.I. JOB NO. *D00064*
SHEET NO. *C1.14*

MATCH LINE STA. 200+00

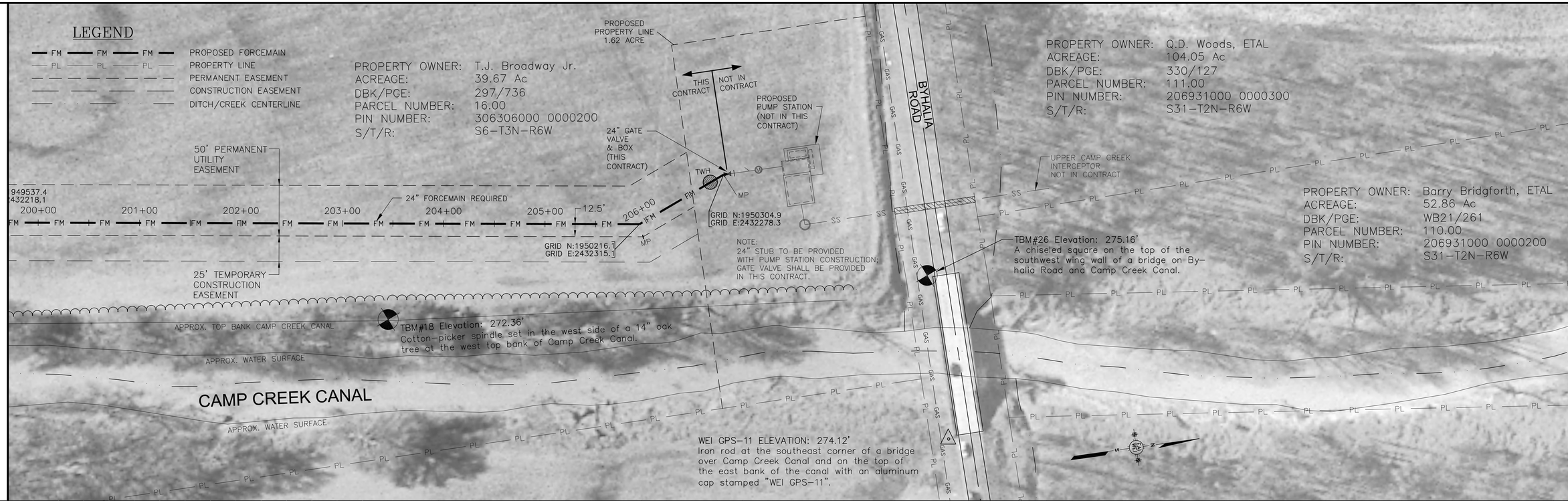

MATCH LINE STA. 207+47.80
END OF PROJECT

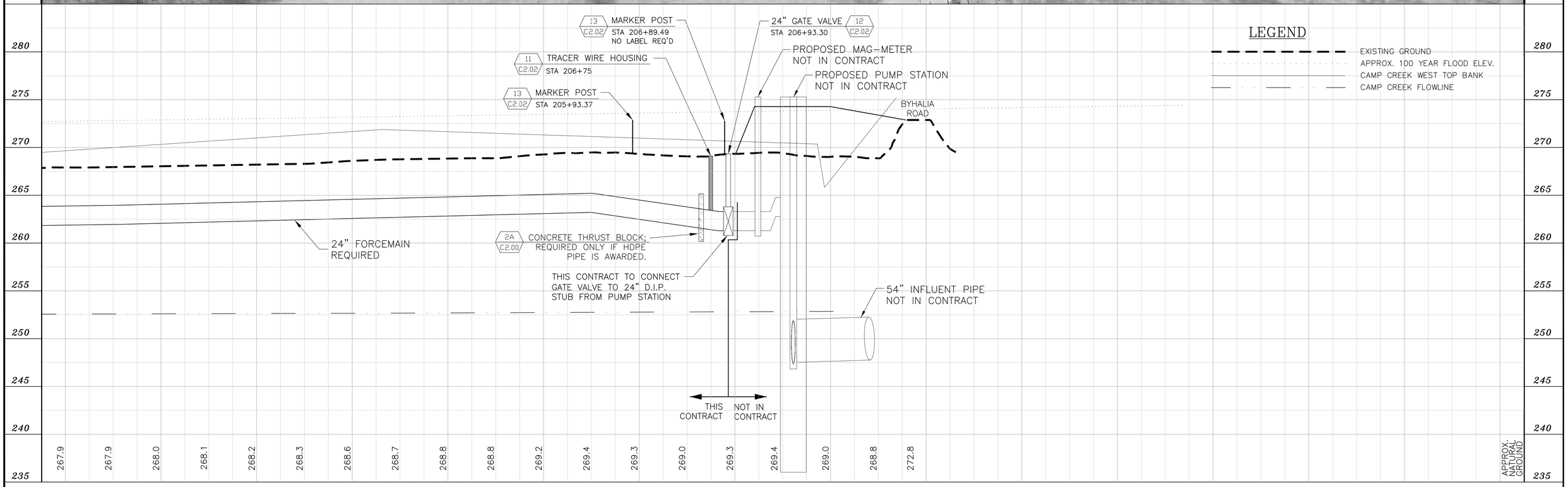

NO.	DATE	REVISIONS	BY

DESIGNED B.W. | DATE 07/10/03
REVIEWED T.H. | SCALE 1"=50' HORT. 1"= 5' VERT.

EAI / WEI, LLC
143-A LEFLEURS SQUARE
JACKSON, MISSISSIPPI 39211
PHONE: 601-355-9526 FAX: 601-352-3945

DESOTO COUNTY REGIONAL UTILITY AUTHORITY
W912EQ-04-B-0002
DESOTO COUNTY, MISSISSIPPI

PLAN/PROFILE SHEET (STA 200+00 - STA 207+47.80)
LOWER CAMP CREEK FORCE MAIN
PHASE 1B, PROJECT 3

ACAD PATH ROUTE
E:\Desoto Co.-DCRUA\D00064\4-Engineering\D00064\Dwg

W.E.I. JOB NO. *D00064*
SHEET NO. *C1.15*

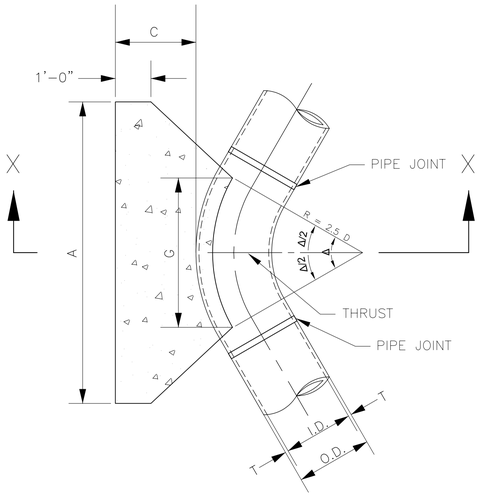

PLAN VIEW

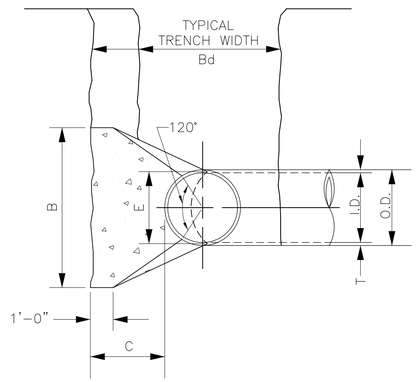

SECTION X–X

NOTES:

1. CONCRETE BLOCKING SHALL BE 3000 PSI (28 DAY).

2. POUR CONCRETE FOR BLOCK AGAINST UNDISTURBED EARTH.

3. DIMENSIONS MAY BE VARIED AS REQUIRED BY FIELD CONDITIONS WHERE AND AS DIRECTED BY THE CONTRACTING OFFICER. THE VOLUME OF CONCRETE BLOCKING SHALL NOT BE LESS THAN SHOWN HERE.

4. USE POLYETHYLENE WRAP OR EQUAL BETWEEN CONCRETE AND BEND TO PREVENT THE CONCRETE FROM STICKING.

5. CONCRETE SHALL NOT EXTEND BEYOND JOINTS.

	24" PIPE (I.D.)						
BENDS	A	B	C	E	G	VOLUME (cu.ft.)	VOLUME (cu.yd.)
11.25°	4'	2'6"	2'	2'2"	1'6"	20.8	0.77
22.5°	6'	3'	2'	2'2"	1'6"	36.7	1.36
45°	7'	5'	2'	2'2"	1'6"	70.2	2.60
90°	11'	6'	2'	2'2"	2'6"	133.1	4.93

NOTE: VALUES IN TABLE ARE BASED ON 1000 PSF SOIL BEARING STRENGTH AND A PIPELINE PRESSURE OF 100PSI.

HORIZONTAL THRUST BLOCK DETAIL — 1 TYP

NOT TO SCALE

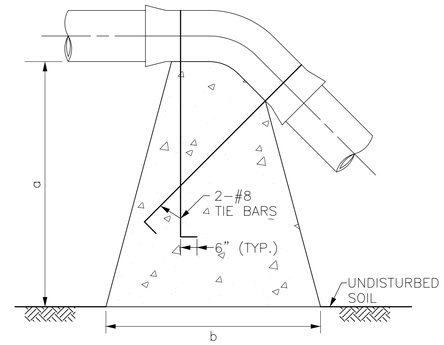

SECTION PARALLEL TO TRENCH

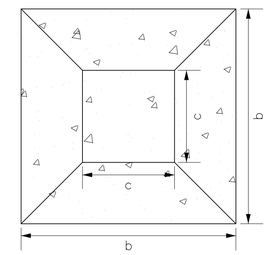

PLAN VIEW

	24" PIPE (I.D.)						
BENDS	a	b	c	AREA TOP (sq.ft.)	AREA BOTTOM (sq.ft.)	VOLUME (cu.ft.)	VOLUME (cu.yd.)
11.25°	1'6"	4'	2'6"	6.25	16	15	0.56
22.5°	3'6"	5'	3'	9	25	57	2.11
45°	6'4"	7'	4'	16	49	204	7.56

NOTE: VALUES IN TABLE ARE BASED ON 1000 PSF SOIL BEARING STRENGTH AND A PIPELINE PRESSURE OF 100PSI.

NOTES:

1. CONCRETE BLOCKING SHALL BE 3000 PSI (28 DAY).

2. POUR CONCRETE FOR BLOCK AGAINST UNDISTURBED EARTH.

3. DIMENSIONS MAY BE VARIED AS REQUIRED BY FIELD CONDITIONS WHERE AND AS DIRECTED BY THE CONTRACTING OFFICER. THE VOLUME OF CONCRETE BLOCKING SHALL NOT BE LESS THAN SHOWN HERE.

4. USE POLYETHYLENE WRAP OR EQUAL BETWEEN CONCRETE AND BEND TO PREVENT THE CONCRETE FROM STICKING.

5. CONCRETE SHALL NOT EXTEND BEYOND JOINTS.

GRAVITY THRUST BLOCK DETAIL — 2 TYP

NOT TO SCALE

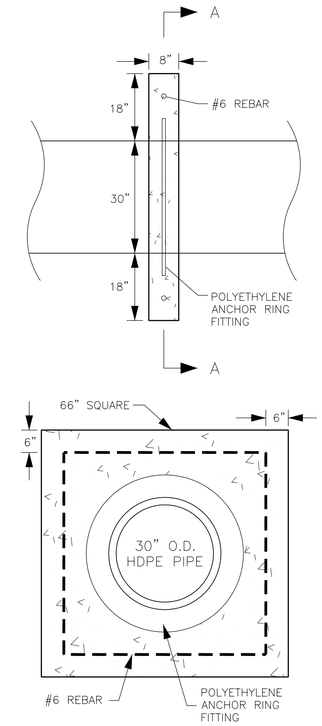

SECTION A–A

NOTE:
CONCRETE BLOCKING SHALL BE 3000 PSI (28 DAY).

HDPE THRUST BLOCK DETAIL — 2A TYP

NOT TO SCALE

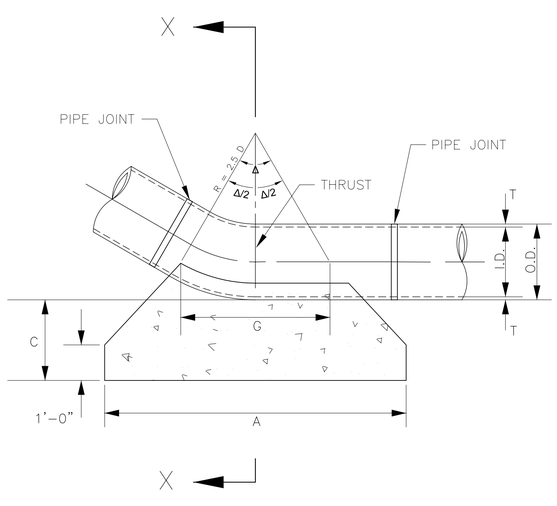

PLAN VIEW

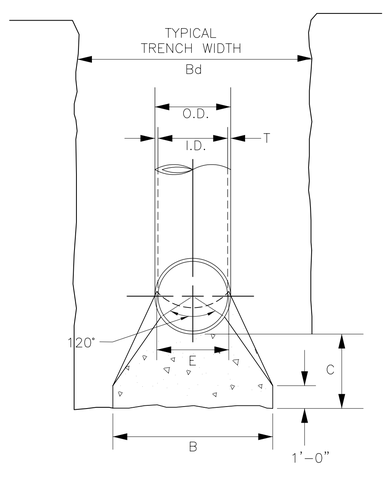

SECTION X–X

	24" PIPE (I.D.)						
BENDS	A	B	C	E	G	VOLUME (cu.ft.)	VOLUME (cu.yd.)
11.25°	4'	2'6"	2'	2'2"	1'6"	20.8	0.77
22.5°	6'	3'	2'	2'2"	1'6"	36.7	1.36
45°	7'	5'	2'	2'2"	1'6"	70.2	2.60
90°	11'	6'	2'	2'2"	2'6"	133.1	4.93

NOTE: VALUES IN TABLE ARE BASED ON 1000 PSF SOIL BEARING STRENGTH AND A PIPELINE PRESSURE OF 100PSI.

NOTES:

1. CONCRETE BLOCKING SHALL BE 3000 PSI (28 DAY).

2. POUR CONCRETE FOR BLOCK AGAINST UNDISTURBED EARTH.

3. DIMENSIONS MAY BE VARIED AS REQUIRED BY FIELD CONDITIONS WHERE AND AS DIRECTED BY THE CONTRACTING OFFICER. THE VOLUME OF CONCRETE BLOCKING SHALL NOT BE LESS THAN SHOWN HERE.

4. USE POLYETHYLENE WRAP OR EQUAL BETWEEN CONCRETE AND BEND TO PREVENT THE CONCRETE FROM STICKING.

5. CONCRETE SHALL NOT EXTEND BEYOND JOINTS.

VERTICAL THRUST BLOCK DETAIL — 3 TYP

NOT TO SCALE

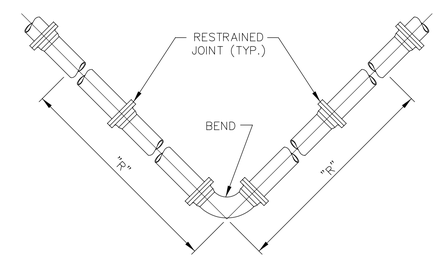

NOTES:

1. RESTRAINING MECHANISMS SHALL BE USED AT ALL BENDS.

2. THE LENGTH OF PIPE RESTRAINED ON EACH SIDE OF THE BEND SHALL NOT BE LESS THAN THE DISTANCES DEFINED IN THE SPECIFICATION ("R").

3. ALL JOINTS WITHIN THE DISTANCE ESTABLISHED IN THE SPECIFICATION ("R") SHALL BE RESTRAINED.

4. FOR RESTRAINT OF PVC AND DUCTILE IRON JOINTS ONLY. OTHER PIPE SHALL BE RESTRAINED PER MANUFACATURER'S RECOMMENDATIONS.

RESTRAINED JOINT DIAGRAM — 4 TYP

NOT TO SCALE

WAGGONER Engineering, Inc.

EAI / WEI, LLC
143-A LEFLEURS SQUARE
JACKSON, MISSISSIPPI 39211
PHONE: 601-355-9526
FAX: 601-352-3945

DESOTO COUNTY REGIONAL UTILITY AUTHORITY
LOWER CAMP CREEK FORCE MAIN
PHASE 1B, PROJECT 3
W912EQ-04-B-0002
DESOTO COUNTY, MISSISSIPPI

DRAWING REVISIONS		
NO.	REMARKS	DATE

SEAL:

DRAWN BY: BBW	SCALE: NOT TO SCALE
DESIGNED BY: BBW/TMH	DATE: 07/10/03
CHECKED BY: TMH	PROJECT: D00064
DWG NAME:	

DRAWING TITLE:

STANDARD DETAILS

SHEET NUMBER:

C2.00

NOTE: 1) DEWATERING REQUIRED TO THIS LEVEL (MIN.). THE CONTRACTOR SHALL MAINTAIN WATER LEVEL TO A LEVEL OF 18" OR GREATER BELOW THE UNDERCUT DEPTH OR THE TRENCH SUBGRADE, WHICHEVER IS DEEPER, BEFORE PIPE PLACEMENT WILL BE ALLOWED.

2) SEE SPECIFICATIONS FOR COMPACTION REQUIREMENTS AND MIN/MAX TRENCH WIDTH

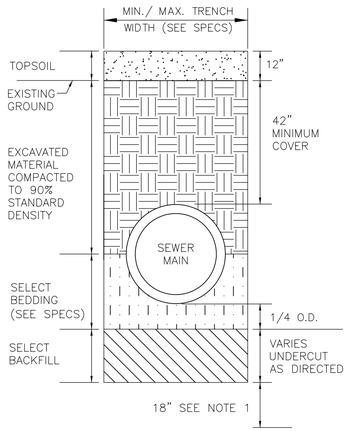

PVC PIPE
TYPICAL SECTION

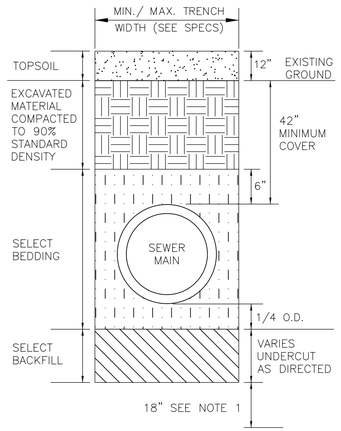

HDPE AND CC
FIBERGLASS RPM PIPE
TYPICAL SECTION

TRENCH DETAIL 5 TYP
NOT TO SCALE

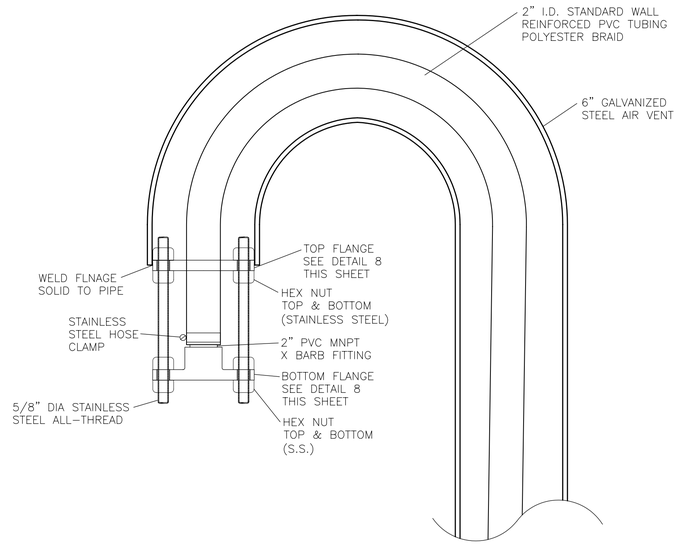

VENT DETAIL 6 TYP
NOT TO SCALE

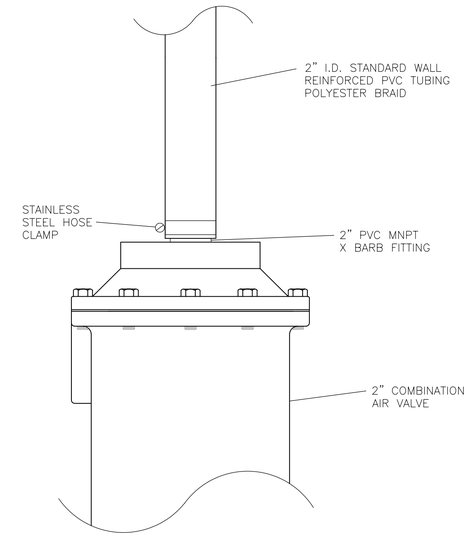

VENT DETAIL 7 TYP
NOT TO SCALE

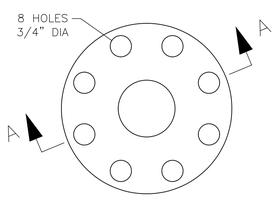

PLAN

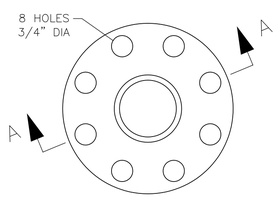

PLAN

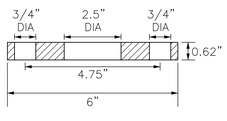

SECTION A–A

FLAT FLANGE

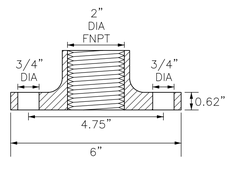

SECTION A–A

THREADED
COMPANION FLANGE

NOTE: ALL FLANGES TO BE HOT DIPPED GALVANIZED AND PAINTED IN ACCORDANCE WITH 09900.

FLANGE DETAILS 8 TYP
NOT TO SCALE

NOTE: AIR VALVE ASSEMBLY SHALL INCLUDE BACKWASH ACCESSORIES KIT # SPK-301ABW

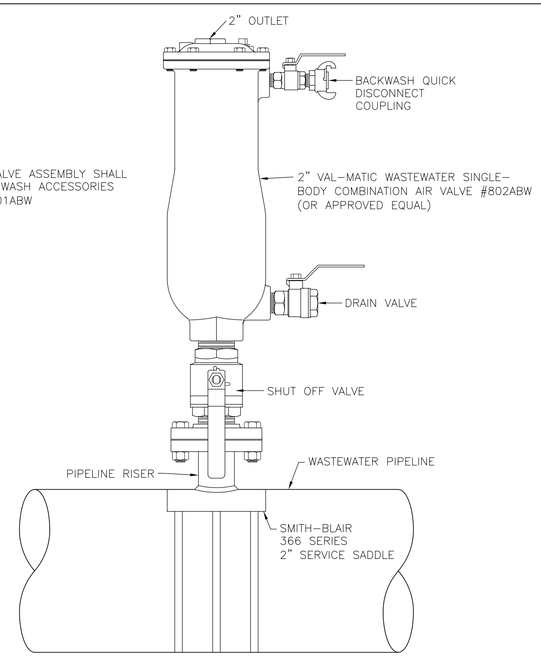

WASTEWATER SINGLE-BODY COMBINATION AIR VALVE 9 TYP
NOT TO SCALE

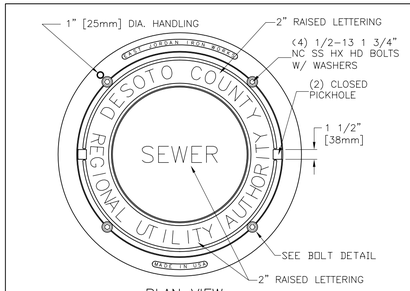

PLAN VIEW

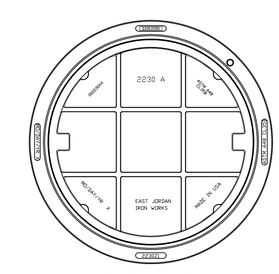

BOTTOM VIEW

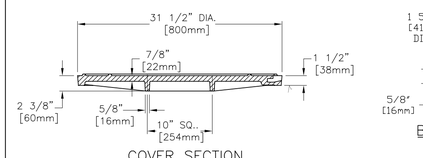

COVER SECTION

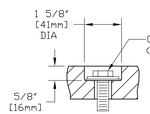

BOLTING DETAIL

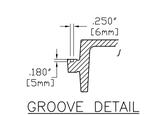

GROOVE DETAIL

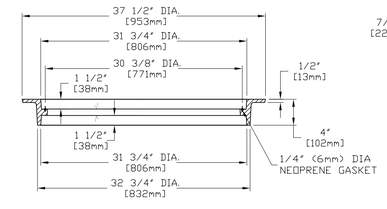

FRAME SECTION

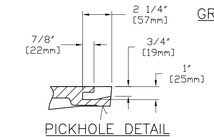

PICKHOLE DETAIL

NOTES:
1. EAST JORDAN IRON WORKS PRODUCT NUMBER NCR03-663J
2. COVER – GRAY IRON ASTM A48 CL35B 219 LBS (100kg)
3. FRAME – GRAY IRON ASTM A48 CL35B 121 LBS (55kg)
4. HEAVY DUTY LOAD RATING
√ MACHINED SURFACE

MANHOLE ASSEMBLY DETAIL 10 TYP
NOT TO SCALE

WAGGONER Engineering, Inc.
EAI / WEI, LLC
143-A LEFLEURS SQUARE
JACKSON, MISSISSIPPI 39211
PHONE: 601-355-9526
FAX: 601-352-3945

DESOTO COUNTY REGIONAL UTILITY AUTHORITY
LOWER CAMP CREEK FORCE MAIN
PHASE 1B, PROJECT 3
W912EQ-04-B-0002
DESOTO COUNTY, MISSISSIPPI

DRAWING REVISIONS		
NO.	REMARKS	DATE

SEAL:

DRAWN BY: BBW	SCALE: NOT TO SCALE
DESIGNED BY: BBW/TMH	DATE: 07/10/03
CHECKED BY: TMH	PROJECT: D00064
DWG NAME:	
DRAWING TITLE: *STANDARD DETAILS*	
SHEET NUMBER: *C2.01*	

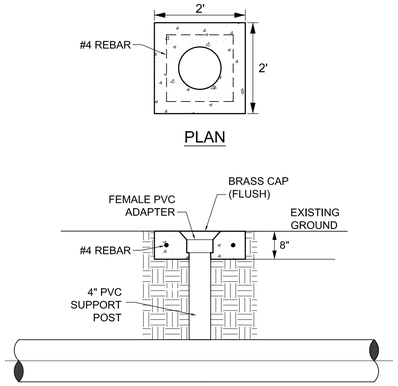

TRACER WIRE HOUSING

NOT TO SCALE

11 TYP

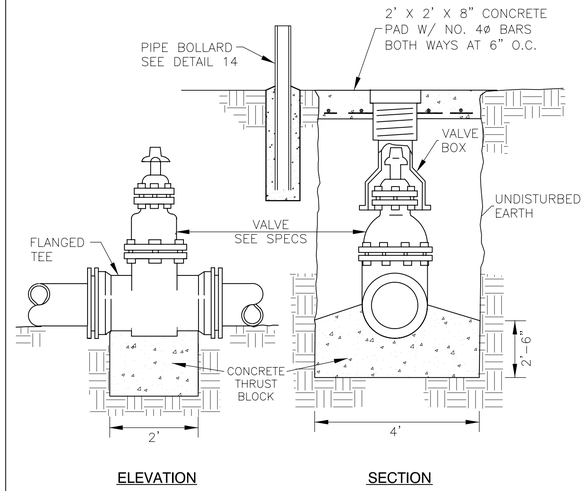

TYPICAL VALVE AND BOX

NOT TO SCALE

12 TYP

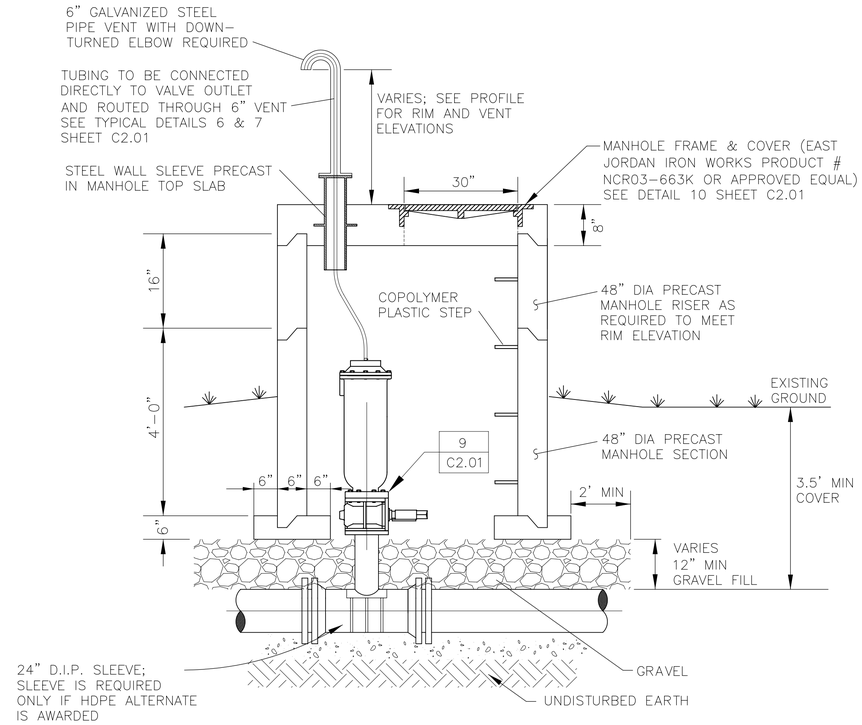

NOTE:

THE CONTRACTOR SHALL OFFSET THE AIR RELEASE VALVE TO ONE SIDE OF THE MANHOLE OPENING TO ALLOW ACCESS INTO THE MANHOLE STRUCTURE.

AIR VALVE HOUSING

NOT TO SCALE

17 TYP

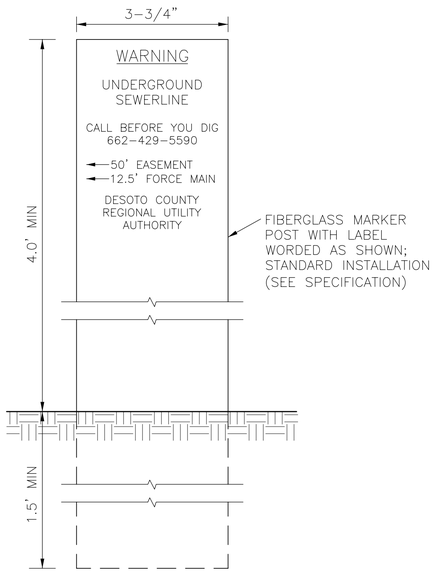

MARKER POST

NOT TO SCALE

13 TYP

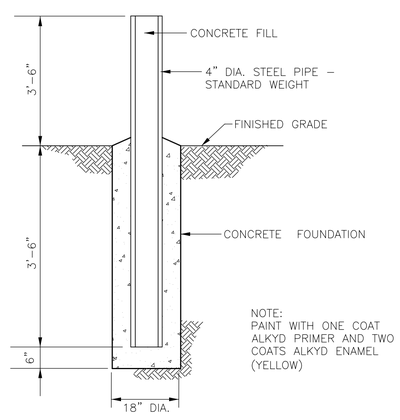

PIPE BOLLARD DETAIL

NOT TO SCALE

14 TYP

NOTES:

1. PIPE JOINTS FOR ILLUSTRATION PURPOSES ONLY. LOCATIONS AND NUMBER WILL VARY.
2. DUCTILE IRON PIPE SHALL BE USED FOR ALL CROSSINGS BEGINNING AND ENDING AT THE TOP OF BANK WITH MINIMUM COVER OF 5' UNLESS OTHERWISE NOTED.
3. SEE DETAIL 16 (THIS SHEET) FOR TYPICAL KEY DETAILS.
4. IF HDPE OR CC FIBERGLASS RPM PIPE IS AWARDED, DUCTILE IRON IS NOT USED UNDER CREEKS.

TYPICAL CREEK CROSSING

NOT TO SCALE

18 TYP

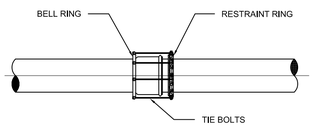

NOTE:
FOR RESTRAINT OF PVC AND DUCTILE IRON JOINTS ONLY. OTHER PIPE SHALL BE RESTRAINED PER MANUFACTURER'S RECOMMENDATION

RESTRAINED JOINT

NOT TO SCALE

15 TYP

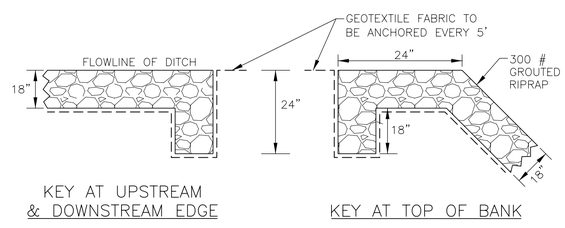

TYPICAL RIPRAP KEY DETAIL

NOT TO SCALE

16 TYP

WAGGONER Engineering, Inc.

EAI / WEI, LLC
143-A LEFLEURS SQUARE
JACKSON, MISSISSIPPI 39211
PHONE: 601-355-9526
FAX: 601-352-3945

DESOTO COUNTY REGIONAL UTILITY AUTHORITY
LOWER CAMP CREEK FORCE MAIN
PHASE 1B, PROJECT 3
W912EQ-04-B-0002
DESOTO COUNTY, MISSISSIPPI

DRAWING REVISIONS		
NO.	REMARKS	DATE

SEAL:

DRAWN BY: BBW	SCALE: NOT TO SCALE
DESIGNED BY: BBW/TMH	DATE: 07/10/03
CHECKED BY: TMH	PROJECT: D00064

DWG NAME:

DRAWING TITLE:

STANDARD DETAILS

SHEET NUMBER:

C2.02

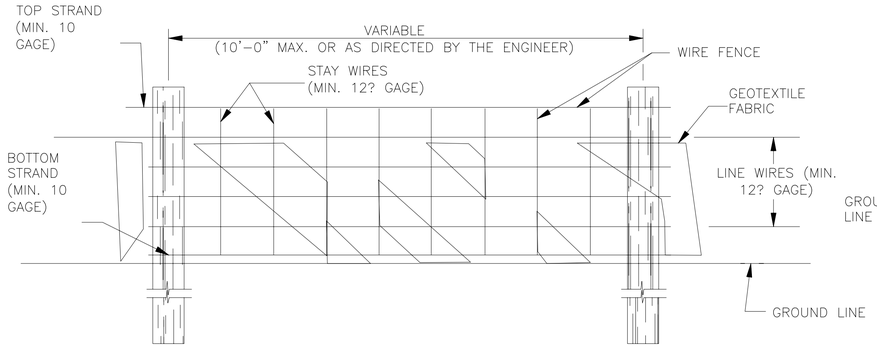

FRONT ELEVATION

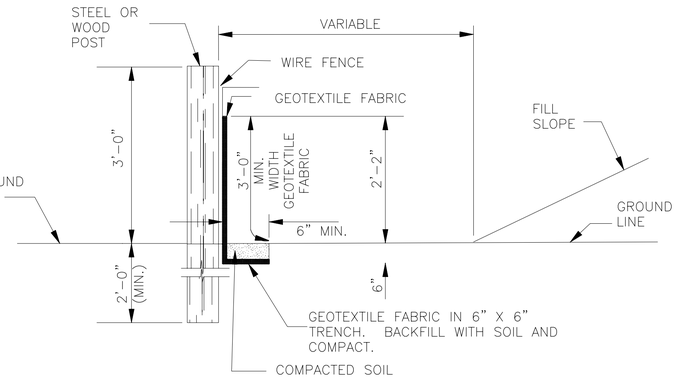

SIDE ELEVATION

NOTES:

1. WIRE SHALL BE MINIMUM OF 32" IN WIDTH AND SHALL HAVE A MINIMUM OF 6 LINE WIRES WITH 12" STAY SPACING.
2. GEOTEXTILE FABRIC SHALL BE A MINIMUM OF 36" IN WIDTH AND SHALL BE FASTENED ADEQUATELY TO THE WIRE AS DIRECTED BY THE ENGINEER.
3. STEEL POST SHALL BE 5'–0" IN HEIGHT AND OF THE SELF–FASTENER ANGLE STEEL TYPE. WOOD POST SHALL BE A MINIMUM OF 5'–0" IN HEIGHT AND 3" OR MORE IN DIAMETER. WIRE FENCE SHALL BE FASTENED TO WOODEN POST WITH NOT LESS THAN 9 GAGE WIRE STAPLES 1" LONG.
4. GEOTEXTILE FABRIC MEETING THE TYPE II MATERIAL REQUIREMENTS AND INSTALLED ACCORDING TO SPECIFICATIONS MAY BE USED WITHOUT WIRE FENCE.

TEMPORARY SILT FENCE | 19
NOT TO SCALE | TYP

NOTES:

1. ALL NEWLY CUT AND/OR FILLED AREAS LACKING ADEQUATE VEGETATION SHALL BE SEEDED, FERTILIZED, MULCHED AND/OR SODDED AS REQUIRED TO EFFECTIVELY PREVENT SOIL EROSION. ALL SLOPES 4:1 OR GREATER SHALL BE STABILIZED WITH A PERMANENT EROSION CONTROL FABRIC INSTALLED PER MANUFACTURER'S RECOMMENDATIONS.

2. SILT FENCES AND HAY BALES SHALL BE USED AS DIRECTED BY THE CONTRACTING OFFICER TO CONTROL SOIL EROSION.

3. THE CONTRACTOR SHALL PROVIDE AND MAINTAIN EROSION CONTROL DURING CONSTRUCTION BY THE PLACEMENT OF SILT FENCE AND/OR HAY BALES WHERE NECESSARY TO PREVENT DOWNSTREAM SILTATION OF ANY DITCHES, PIPES, DRAINAGE STRUCTURES, OR ADJACENT PROPERTIES. THE CONTRACTOR SHALL PROVIDE ANY ADDITIONAL EROSION CONTROL AS NEEDED OR AS DIRECTED BY THE CONTRACTING OFFICER.

4. THE CONTRACTOR IS RESPONSIBLE FOR COMPLYING WITH THE STATE OF MISSISSIPPI DEPARTMENT OF ENVIRONMENTAL QUALITY (MDEQ) OFFICE OF POLLUTION CONTROL (OPC) STORM WATER CONSTRUCTION GENERAL PERMIT AND THE PROJECT'S STORM WATER POLLUTION PREVENTION PLAN (SWPPP) FOR ALL EROSION CONTROL DURING CONSTRUCTION ACTIVITIES.

5. THE CONTRACTOR IS RESPONSIBLE FOR MAINTAINING EROSION CONTROL DEVICES AND REPORTING ANY MAINTENANCE AS REQUIRED BY THE STATE OF MISSISSIPPI DEPARTMENT OF ENVIRONMENTAL QUALITY (MDEQ) OFFICE OF POLLUTION CONTROL (OPC) STORM WATER CONSTRUCTION GENERAL PERMIT AND THE PROJECT'S STORM WATER POLLUTION PREVENTION PLAN (SWPPP) DURING CONSTRUCTION ACTIVITIES.

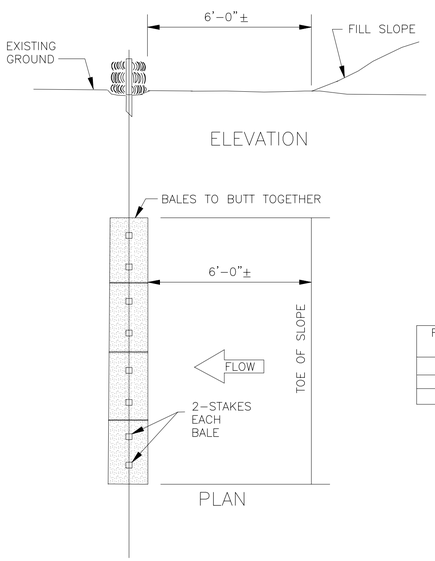

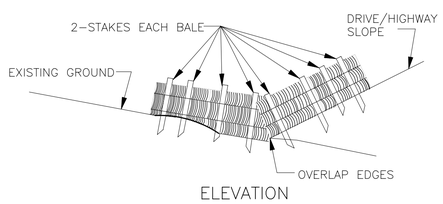

ELEVATION

NOTE: SIMILAR TREATMENT TO BE USED IN DITCHES.

FALL OF DITCH (%)	DISTANCE* (ft)
0 – 1	100'
1 – 2	50'
>2	25'

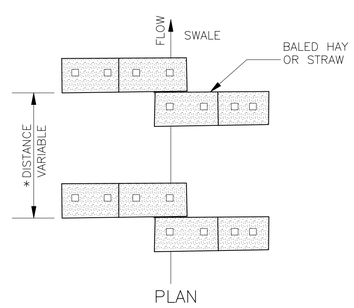

PLAN

NOTE: EMBED ALL BALES 3" MINIMUM INTO GROUND AND STAKE (2" X 2" X 36") SECURELY.

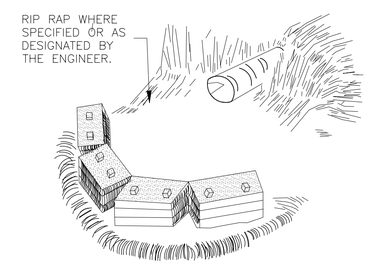

CULVERT

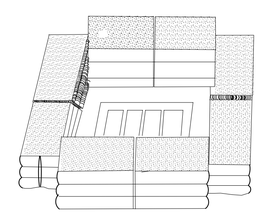

DROP INLET

TEMPORARY EROSION CHECKS | 20
NOT TO SCALE | TYP

WAGGONER Engineering, Inc.
EAI / WEI, LLC
143-A LEFLEURS SQUARE
JACKSON, MISSISSIPPI 39211
PHONE: 601-355-9526
FAX: 601-352-3945

DESOTO COUNTY REGIONAL UTILITY AUTHORITY
LOWER CAMP CREEK FORCE MAIN
PHASE 1B, PROJECT 3
W912EQ-04-B-0002
DESOTO COUNTY, MISSISSIPPI

DRAWING REVISIONS		
NO.	REMARKS	DATE

SEAL:

DRAWN BY: BBW	SCALE: NOT TO SCALE
DESIGNED BY: BBW/TMH	DATE: 07/10/03
CHECKED BY: TMH	PROJECT: DO0064

DWG NAME:

DRAWING TITLE:

TEMPORARY EROSION CONTROL DETAILS

SHEET NUMBER:

C2.03