SOLICITATION, OFFER, AND AWARD *(Construction, Alteration, or Repair)*	1. SOLICITATION NO. W912EQ-04-B-0011	2. TYPE OF SOLICITATION [X] SEALED BID (IFB) [ ] NEGOTIATED *(RFP)*	3. DATE ISSUED 08-Jun-2004	PAGE OF PAGES 1 OF 200

IMPORTANT - The "offer" section on the reverse must be fully completed by offeror.

4. CONTRACT NO.	5. REQUISITION/PURCHASE REQUEST NO. W38XGR-4034-6056	6. PROJECT NO. W912EQ-04-B-0011

7. ISSUED BY CODE W912EQ	8. ADDRESS OFFER TO *(If Other Than Item 7)* CODE
US ARMY ENGINEER DISTRICT, MEMPHIS 167 N MAIN STREET B202 MEMPHIS TN 38103-1894 TEL: FAX:	ADDRESS SAME AS BLOCK 7. HAND DELIVERED BIDS RECEIVED IN RM 681, CLIFFORD DAVIS FEDERAL BUILDING, MEMPHIS TN 38103-1894 TEL: FAX:

9. FOR INFORMATION CALL:	A. NAME	B. TELEPHONE NO. *(Include area code)* *(NO COLLECT CALLS)*
	J. CAROL SEIBERT	(901) 544-3353

SOLICITATION

NOTE: In sealed bid solicitations "offer" and "offeror" mean "bid" and "bidder".

10. THE GOVERNMENT REQUIRES PERFORMANCE OF THE WORK DESCRIBED IN THESE DOCUMENTS*(Title, identifying no., date):*

Gravity Flow Culvert Replacement No. 3, Sta 1/10 New Madrid

Description of Work: The project consists of furnishing all plant, labor, materials, and equipment for clearing and disposal of debris, excavation, sheet piling, backfill, and disposal of materials, stone protection, pressure grout existing culvert; installing reinforced concrete culvert, providing a sluice gate and gate lift assembly, fertilizing and seeding, and environmental protection. The estimated value of the proposed work is between $500,000 and $1,000,000. There will be seventeen (17) drawings.

This solicitation is being issued pursuant to the Small Business Competitiveness Demonstration Program. The NAICS is 237110. For the purpose of this procurement to qualify as a small business concern in addition to being independently owned and operated and not dominant in the field of operation in which it is bidding on government contracts, the concern must have had average annual sales receipts for the three preceding fiscal years not exceeding $28.5 million.

THIS WILL BE AN UNRESTICTED PROCUREMENT WITH HUBZONE PRICE EVALUATION PREFERENCE (SEE SECTION 00700, CLAUSE 52.219-4)

Wage Determination No. MO030001 is locted in Section 00900.

11. The Contractor shall begin performance within 10 calendar days and complete it within 180 calendar days after receiving [ ] award, [X] notice to proceed. This performance period is [X] mandatory, [ ] negotiable. *(See* 700, 52.211-10 *.)*

12 A. THE CONTRACTOR MUST FURNISH ANY REQUIRED PERFORMANCE AND PAYMENT BONDS? *(If "YES," indicate within how many calendar days after award in Item 12B.)* [X] YES [ ] NO	12B. CALENDAR DAYS 5

13. ADDITIONAL SOLICITATION REQUIREMENTS:

A. Sealed offers in original and 0 copies to perform the work required are due at the place specified in Item 8 by 02:40 PM *(hour)* local time 08 Jul 2004 *(date)*. If this is a sealed bid solicitation, offers must be publicly opened at that time. Sealed envelopes containing offers shall be marked to show the offeror's name and address, the solicitation number, and the date and time offers are due.

B. An offer guarantee [X] is, [ ] is not required.

C. All offers are subject to the (1) work requirements, and (2) other provisions and clauses incorporated in the solicitation in full text or by reference.

D. Offers providing less than 120 calendar days for Government acceptance after the date offers are due will not be considered and will be rejected.

SOLICITATION, OFFER, AND AWARD (Continued)

(Construction, Alteration, or Repair)

OFFER ***(Must be fully completed by offeror)***

14. NAME AND ADDRESS OF OFFEROR *(Include ZIP Code)*		15. TELEPHONE NO. *(Include area code)*
		16. REMITTANCE ADDRESS *(Include only if different than Item 14)* **See Item 14**
CODE	FACILITY CODE	

17. The offeror agrees to perform the work required at the prices specified below in strict accordance with the terms of this solicitation, if this offer is accepted by the Government in writing within _____ calendar days after the date offers are due. *(Insert any number equal to or greater than the minimum requirements stated in Item 13D. Failure to insert any number means the offeror accepts the minimum in Item 13D.)*

AMOUNTS	SEE SCHEDULE OF PRICES

18. The offeror agrees to furnish any required performance and payment bonds.

19. ACKNOWLEDGMENT OF AMENDMENTS

(The offeror acknowledges receipt of amendments to the solicitation -- give number and date of each)

AMENDMENT NO.										
DATE										

20A. NAME AND TITLE OF PERSON AUTHORIZED TO SIGN OFFER *(Type or print)*	20B. SIGNATURE	20C. OFFER DATE

AWARD ***(To be completed by Government)***

21. ITEMS ACCEPTED:

22. AMOUNT	23. ACCOUNTING AND APPROPRIATION DATA

24. SUBMIT INVOICES TO ADDRESS SHOWN IN *(4 copies unless otherwise specified)*	**ITEM**	25. OTHER THAN FULL AND OPEN COMPETITION PURSUANT TO ☐ 10 U.S.C. 2304(c) ☐ 41 U.S.C. 253(c)
26. ADMINISTERED BY CODE		27. PAYMENT WILL BE MADE BY: CODE

CONTRACTING OFFICER WILL COMPLETE ITEM 28 OR 29 AS APPLICABLE

☐ 28. NEGOTIATED AGREEMENT *(Contractor is required to sign this document and return _____ copies to issuing office.)* Contractor agrees to furnish and deliver all items or perform all work, requisitions identified on this form and any continuation sheets for the consideration stated in this contract. The rights and obligations of the parties to this contract shall be governed by (a) this contract award, (b) the solicitation, and (c) the clauses, representations, certifications, and specifications or incorporated by reference in or attached to this contract.

☐ 29. AWARD *(Contractor is not required to sign this document.)* Your offer on this solicitation, is hereby accepted as to the items listed. This award consummates the contract, which consists of (a) the Government solicitation and your offer, and (b) this contract award. No further contractual document is necessary.

30A. NAME AND TITLE OF CONTRACTOR OR PERSON AUTHORIZED TO SIGN *(Type or print)*		31A. NAME OF CONTRACTING OFFICER *(Type or print)* TEL: EMAIL:
30B. SIGNATURE	30C. DATE	31B. UNITED STATES OF AMERICA BY 31C. AWARD DATE

Section 00010 - SOLICITATION CONTRACT FORM

GRAVITY FLOW CULVERT REPLACEMENT NO. 3
NEW MADRID, MISSOURI

ITEM NO	SUPPLIES/SERVICES	QUANTITY	UNIT	UNIT PRICE	AMOUNT
0001	Mobilization and Demobilization	1	Lump Sum	XXXX.XX	_____
0002	Environmental Protection	1	Lump Sum	XXXX.XX	_____
0003	Control of Water	1	Lump Sum	XXXX.XX	_____
0004	Demolition	1	Lump Sum	XXXX.XX	_____
0005	Clearing and Grubbing	1	Lump Sum	XXXX.XX	_____
0006	Excavation	1	Lump Sum	XXXX.XX	_____
0007	Pervious Backfill	1	Lump Sum	XXXX.XX	_____
0008	Wall Drain	1	Lump Sum	XXXX.XX	_____
0009	Riprap "R 90"	667	Net Ton (2,000 LB)	_____	_____
0010	Turfing	1	Lump Sum	XXXX.XX	_____
0011	Reinforced Concrete Culvert Pipe, 36-inch diameter	1	Lump Sum	XXXX.XX	_____
0012	Geotextile (Filter Fabric)	1	Lump Sum	XXXX.XX	_____
0013	Cast-In-Place Concrete	1	Lump Sum	XXXX.XX	_____

0014	Sluice Gate and Gate Lift Assembly	1	Lump Sum	XXXX.XX	_____
0015	Pressure Grouting	1	Lump Sum	XXXX.XX	_____
0016	Structural Steel & Miscellaneous Metals	1	Lump Sum	XXXX.XX	_____

TOTAL ITEMS 0001 THROUGH 0016 _____

See Notes on next page

NOTES

Bidders shall furnish unit prices for all items listed on the schedule of bid items that require unit prices. If the bidder fails to insert a unit price in the appropriate blank for required items, but does furnish an extended total or an estimated amount for such items, the Government will deem his unit price to be the quotient obtained by dividing the extended amount for that line item by the quantity. IF THE BIDDER OMITS BOTH THE UNIT PRICE AND THE EXTENDED ESTIMATED AMOUNT FOR ANY ITEM, HIS BID WILL BE DECLARED NONRESPONSIVE.

Award will be made as a whole to one bidder.

All quantities are estimated where unit is given as "Lump Sum" .

If a bid or modification to a bid based on unit prices is submitted and provides for a lump sum adjustment to the total estimated cost, the application of the lump sum adjustment to each unit price, including lump sum units, in bid schedule must be stated, or, if it is not stated, the bidder agrees that the lump sum adjustment shall be applied on a pro rata basis to every unit price in the bid schedule.

QUANTITY ESTIMATES - Estimates of quantities involved in certain items of work for which bids are being solicited on a lump sum or job basis have been made for the use of the Government. Copies of these quantity estimates may be obtained from the U S Army Engineer District Memphis, 167 North Main Street, Room 762, Memphis, Tennessee 38103-1894, telephone 901/544-3236, or visit our website at http://www.mvm.usace.army.mil/ It is to be expressly understood that the accuracy of these estimates is in no way warranted and that the furnishing of this information to a bidder will not relieve him of his responsibility to estimate the quantities involved. It is further to be expressly understood that in no case will such estimate be used as a basis of claim against the Government.

Technical POC: Jerry Welch 901-544-3236
Jerry.R.Welch@mvm02.usace.army.mil

Administrative POC: Carol Seibert 901-544-3353
Carol.J.Seibert@mvm02.usace.army.mil

SECTION 00100
CONDITIONS AND NOTICES TO BIDDERS

A. BIDDING MATERIAL - Specifications, drawings and solicitation forms can be obtained at no cost from the Memphis District Corps of Engineers Contracting Home Page http://www.mvm.usace.army.mil/contracting/ebs/AdvertisedSolicitations.asp or from the Corps of Engineers, Memphis District, Contracting Division, 167 North Main Street Room 681, Memphis, TN 38103-1894 (901)544-3619. Contractors are encouraged to use the Home Page to obtain solicitation drawings and specifications. Questions concerning bid documents should be submitted in writing to Judy Stallion (901)544-0776 at judy.e.stallion@usace.army.mil

BID DOCUMENTS: The following documents must be submitted with a bid:

1. SF 1442, Solicitation, Offer and Award
2. Schedule of bids/prices
3. Representations and Certifications (Section 00600)
4. All amendments must be acknowledged
5. Bid Bond (Standard Form 24), if over $100,000

B. SITE VISITS – Bidders should inspect the job site prior to submitting a bid. Site Visits may be coordinated by mail or telephone (COLLECT CALLS NOT ACCEPTED) between the hours of 7:30 AM and 3:00 PM, exclusive of Federal holidays. The point of contact to schedule a site visit for this Invitation for Bids is: Stephen P. Shankle, Caruthersville Area Engineer, at 901-544-3074 or Stephen.p.Shankle@mvm02.usace.army.mil. See Section 00100, clause 52.236-27 Alt I, entitled "Site Visit (Construction)".

C. CONDITIONS AFFECTING THE WORK - Bidders should visit the site and take such other steps as may be reasonably necessary to ascertain the nature and location of the work and the general and local conditions that can affect the work or the cost thereof. Failure to do so will not relieve bidders from responsibility for estimating properly the difficulty or cost of successfully performing the work. The Government will assume no responsibility for any understanding or representations concerning conditions made by any of its officers or agents prior to the execution of the contract, unless included in the Invitation for Bids, the specifications or related documents. See Section 00700, clause 52.236-3, entitled "Site Investigation and Conditions Affecting the Work".

D. PUBLIC OPENING OF BIDS - Bids will be publicly opened at the time set for opening in the Invitation for Bids. Their content will be made public for the information of bidders and others interested, who may be present. As soon as practicable after bid opening, an abstract of bids will be available through our web page at: http://www.mvm.usace.army.mil/contracting/ebs/AdvertisedSolicitations.asp under Bid Results.

E. BIDDER'S ADDRESS - Prospective bidders should indicate in the offer, the address to which payment and/or correspondence should be mailed, if such address is different from that shown for the bidder on Standard Form 1442 Block 14.

F. MODIFICATIONS PRIOR TO DATE SET FOR OPENING BIDS - The right is reserved as the interest of the Government may require, to revise or amend the specifications or drawings or both prior to the date set for opening bids. Such revisions and amendments, if any, will be announced by an amendment or amendments to this Invitation for Bids. If the revisions and amendments are of a nature which requires material changes in quantities or prices bid or both, the date set for opening bids may be postponed by such number of days as in the opinion of the issuing officer will enable bidders to revise their bids. In such cases, the amendment will include an announcement of the new date for opening bids. See Section 00100, clause 52.214-3, "Amendments to Invitations for Bids".

G. NOTICE TO BIDDERS - ONE HUNDRED TWENTY (120) DAY OFFER GUARANTEE (See SF 1442 Block 13d)

H. EXPLANATION OF PROVISION/CLAUSE NUMBERS UTILIZED IN THIS SOLICITATION -
(1) Federal Acquisition Regulation (FAR) provisions/clauses are numbered as follows: 52.252-7.
(2) Defense Acquisition Regulation Supplement (DFARS) provisions/clauses are numbered as follows: 252.252-7000.
(3) Army Federal Acquisition Regulation Supplement (AFARS), provisions/clauses are numbered as follows: 52.252-9000.
(4) Engineer Federal Acquisition Regulation Supplement (EFARS), provisions/clauses are numbered as follows: 52.252-5000.

I. REQUIRED CENTRAL CONTRACTOR REGISTRATION - By submission of a bid, the bidder acknowledges the requirement that a prospective awardee must be registered in the CCR database prior to award, during performance, and through final payment of any contract resulting from this solicitation. Lack of registration in the CCR database will make a bidder ineligible for award. Bidders and contractors may obtain information on registration and annual confirmation requirements by calling 1-888-227-2432, or at: http://www.ccr.gov See Section 00700, clause 252.204-7004 Alt A, "Required Central Contractor Registration Alternate A".

J. BIDDER'S QUALIFICATIONS - To establish its responsibility, the bidder may be requested by the Government to submit a statement regarding his previous experience in performing comparable work, his business and technical organization, financial resources (including recent financial statements or audits), plant available to be used in performing the work and, if applicable, an approved sub-contracting plan. All documents relevant to establish a bidder's responsibility shall be made available as soon as practicable after bid opening; but, not later than 3 days after request by the Contracting Officer or the authorized Representative of the Contracting Officer.

K. NOTICE OF BONDS AND INSURANCE - The following bid/contract information is applicable only if the bid/contract is over one hundred thousand dollars ($100,000):

(1) BID BONDS: This is applicable only if proposal is over one hundred thousand dollars ($100,000). Each bidder shall submit with his bid a Bid Bond (Standard Form 24) with good and sufficient surety or sureties acceptable to the Government in the form of twenty percent (20%) of the bid price or three million dollars ($3,000,000) whichever is lesser. The bid bond penalty may be expressed in terms of a percentage or may be expressed in dollars and cents. See Section 00100, clause 52.228-1, entitled "Bid Guarantee".

(2) PERFORMANCE BONDS. The penal amount of the performance bond shall equal one hundred percent (100%) of the contract price. Bonds shall be received within five (5) days after receipt of contract award. See Section 00700, clause 52.228-15, entitled "Performance and Payment Bonds – Construction".

(3) PAYMENT BONDS: Within five (5) days after receipt of contract award to the bidder whom award is made, one (1) bond, with good and sufficient surety or sureties acceptable to the Government, shall be furnished; namely a Payment Bond (Standard Form 25A). The penal amount of such bonds shall equal one hundred percent (100%) of the contract price. See Section 00700, clause 52.228-15, entitled "Performance and Payment Bonds – Construction".

(4) INSURANCE: The accepted bidder shall provide adequate insurance, within five (5) days after receipt of contract award. See Section 00800 for insurance requirements.

L. POST AWARD SUBMITTAL REQUIREMENTS - Within five (5) days after receipt of contract award, the contractor shall submit an acceptable performance bond, payment bond and certificate of insurance. Within fifteen (15) days after receipt of notice to proceed, the contractor shall provide an approved Accident Prevention Plan, Environmental Protection Plan and Quality Control Plan. (See Section 01330)

SECTION 00100
TABLE OF CONTENTS

52.211-2	Availability of Specifications Listed in the DoD Index of Specifications and Standards (DODISS) and Descriptions Listed in the Acquisition Management Systems and Data Requirements Control List, DOD 5010.12-L	DEC 2003
52.214-3	Amendments To Invitations For Bids	DEC 1989
52.214-4	False Statements In Bids	APR 1984
52.214-5	Submission Of Bids	MAR 1997
52.214-6	Explanation To Prospective Bidders	APR 1984
52.214-7	Late Submissions, Modifications, and Withdrawals of Bids	NOV 1999
52.214-18	Preparation of Bids-Construction	APR 1984
52.214-19	Contract Award-Sealed Bidding-Construction	AUG 1996
52.214-34	Submission Of Offers In The English Language	APR 1991
52.214-35	Submission Of Offers In U.S. Currency	APR 1991
52.214-5000	Apparent Clerical Mistakes	MAY 1999
52.216-1	Type Of Contract	APR 1984
52.222-23	Notice of Requirement for Affirmative Action to Ensure Equal Employment Opportunity for Construction	FEB 1999
52.225-10	Notice of Buy American Act Requirement--Construction Materials	MAY 2002
52.228-1	Bid Guarantee	SEP 1996
52.233-2	Service Of Protest	AUG 1996
52.236-27 Alt I	Site Visit (Construction) (Feb 1995) - Alternate I	FEB 1995
252.209-7001	Disclosure of Ownership or Control by the Government of a Terrorist Country	MAR 1998
252.209-7002	Disclosure Of Ownership Or Control By A Foreign Government	SEP 1994
252.211-7001	Availability of Specifications and Standards Not Listed in DODISS, Data Item Descriptions Not Listed in DoD 5010.12-L, and Plans, Drawings, and Other Pertinent Documents	DEC 1991
252.236-7008	Contract Prices-Bidding Schedules	DEC 1991

CLAUSES INCORPORATED BY FULL TEXT

52.211-2 AVAILABILITY OF SPECIFICATIONS LISTED IN THE DOD INDEX OF SPECIFICATIONS AND STANDARDS (DODISS) AND DESCRIPTIONS LISTED IN THE ACQUISITION MANAGEMENT SYSTEMS AND DATA REQUIREMENTS CONTROL LIST, DOD 5010.12-L (JAN 2004)

Copies of specifications, standards, and data item descriptions cited in this solicitation may be obtained--

(a) From the ASSIST database via the Internet at http://assist.daps.dla.mil; or

(b) By submitting a request to the--Department of Defense Single Stock Point (DoDSSP), Building 4, Section D, 700 Robbins Avenue, Philadelphia, PA 19111-5094, Telephone (215) 697-2179, Facsimile (215) 697-1462.

(End of provision)

52.214-3 AMENDMENTS TO INVITATIONS FOR BIDS (DEC 1989)

(a) If this solicitation is amended, then all terms and conditions which are not modified remain unchanged.

(b) Bidders shall acknowledge receipt of any amendment to this solicitation (1) by signing and returning the amendment, (2) by identifying the amendment number and date in the space provided for this purpose on the form for submitting a bid, (3) by letter or telegram, or (4) by facsimile, if facsimile bids are authorized in the solicitation. The Government must receive the acknowledgment by the time and at the place specified for receipt of bids.

(End of provision)

52.214-4 FALSE STATEMENTS IN BIDS (APR 1984)

Bidders must provide full, accurate, and complete information as required by this solicitation and its attachments. The penalty for making false statements in bids is prescribed in 18 U.S.C. 1001.

(End of provision)

52.214-5 SUBMISSION OF BIDS (MAR 1997)

(a) Bids and bid modifications shall be submitted in sealed envelopes or packages (unless submitted by electronic means) (1) addressed to the office specified in the solicitation, and (2) showing the time and date specified for receipt, the solicitation number, and the name and address of the bidder.

(b) Bidders using commercial carrier services shall ensure that the bid is addressed and marked on the outermost envelope or wrapper as prescribed in subparagraphs (a)(1) and (2) of this provision when delivered to the office specified in the solicitation.

(c) Telegraphic bids will not be considered unless authorized by the solicitation; however, bids may be modified or withdrawn by written or telegraphic notice.

(d) Facsimile bids, modifications, or withdrawals, will not be considered unless authorized by the solicitation.

(e) Bids submitted by electronic commerce shall be considered only if the electronic commerce method was specifically stipulated or permitted by the solicitation.

(End of provision)

52.214-6 EXPLANATION TO PROSPECTIVE BIDDERS (APR 1984)

Any prospective bidder desiring an explanation or interpretation of the solicitation, drawings, specifications, etc., must request it in writing soon enough to allow a reply to reach all prospective bidders before the submission of their bids. Oral explanations or instructions given before the award of a contract will not be binding. Any information given a prospective bidder concerning a solicitation will be furnished promptly to all other prospective bidders as an amendment to the solicitation, if that information is necessary in submitting bids or if the lack of it would be prejudicial to other prospective bidders.

(End of provision)

52.214-7 LATE SUBMISSIONS, MODIFICATIONS, AND WITHDRAWALS OF BIDS (NOV 1999)

(a) Bidders are responsible for submitting bids, and any modifications or withdrawals, so as to reach the Government office designated in the invitation for bids (IFB) by the time specified in the IFB. If no time is specified in the IFB, the time for receipt is 4:30 p.m., local time, for the designated Government office on the date that bids are due.

(b)(1) Any bid, modification, or withdrawal received at the Government office designated in the IFB after the exact time specified for receipt of bids is “late” and will not be considered unless it is received before award is made, the Contracting Officer determines that accepting the late bid would not unduly delay the acquisition; and--

(i) If it was transmitted through an electronic commerce method authorized by the IFB, it was received at the initial point of entry to the Government infrastructure not later than 5:00 p.m. one working day prior to the date specified for receipt of bids; or

(ii) There is acceptable evidence to establish that it was received at the Government installation designated for receipt of bids and was under the Government's control prior to the time set for receipt of bids.

(2) However, a late modification of an otherwise successful bid that makes its terms more favorable to the Government, will be considered at any time it is received and may be accepted.

(c) Acceptable evidence to establish the time of receipt at the Government installation includes the time/date stamp of that installation on the bid wrapper, other documentary evidence of receipt maintained by the installation, or oral testimony or statements of Government personnel.

(d) If an emergency or unanticipated event interrupts normal Government processes so that bids cannot be received at the Government office designated for receipt of bids by the exact time specified in the IFB and urgent Government requirements preclude amendment of the IFB, the time specified for receipt of bids will be deemed to be extended to the same time of day specified in the solicitation on the first work day on which normal Government processes resume.

(e) Bids may be withdrawn by written notice received at any time before the exact time set for receipt of bids. If the IFB authorizes facsimile bids, bids may be withdrawn via facsimile received at any time before the exact time set

for receipt of bids, subject to the conditions specified in the provision at 52.214-31, Facsimile Bids. A bid may be withdrawn in person by a bidder or its authorized representative if, before the exact time set for receipt of bids, the identity of the person requesting withdrawal is established and the person signs a receipt for the bid.

(End of provision)

52.214-18 PREPARATION OF BIDS--CONSTRUCTION (APR 1984)

(a) Bids must be (1) submitted on the forms furnished by the Government or on copies of those forms, and (2) manually signed. The person signing a bid must initial each erasure or change appearing on any bid form.

(b) The bid form may require bidders to submit bid prices for one or more items on various bases, including--

(1) Lump sum bidding;

(2) Alternate prices;

(3) Units of construction; or

(4) Any combination of subparagraphs (1) through (3) above.

(c) If the solicitation requires bidding on all items, failure to do so will disqualify the bid. If bidding on all items is not required, bidders should insert the words "no bid" in the space provided for any item on which no price is submitted.

(d) Alternate bids will not be considered unless this solicitation authorizes their submission.

(End of provision)

52.214-19 CONTRACT AWARD--SEALED BIDDING--CONSTRUCTION (AUG 1996)

(a) The Government will evaluate bids in response to this solicitation without discussions and will award a contract to the responsible bidder whose bid, conforming to the solicitation, will be most advantageous to the Government, considering only price and the price-related factors specified elsewhere in the solicitation.

(b) The Government may reject any or all bids, and waive informalities or minor irregularities in bids received.

(c) The Government may accept any item or combination of items, unless doing so is precluded by a restrictive limitation in the solicitation or the bid.

(d) The Government may reject a bid as nonresponsive if the prices bid are materially unbalanced between line items or subline items. A bid is materially unbalanced when it is based on prices significantly less than cost for some work and prices which are significantly overstated in relation to cost for other work, and if there is a reasonable doubt that the bid will result in the lowest overall cost to the Government even though it may be the low evaluated bid, or if it is so unbalanced as to be tantamount to allowing an advance payment.

(End of provison)

52.214-34 SUBMISSION OF OFFERS IN THE ENGLISH LANGUAGE (APR 1991)

Offers submitted in response to this solicitation shall be in the English language. Offers received in other than English shall be rejected.

(End of provision)

52.214-35 SUBMISSION OF OFFERS IN U.S. CURRENCY (APR 1991)

Offers submitted in response to this solicitation shall be in terms of U.S. dollars. Offers received in other than U.S. dollars shall be rejected.

(End of provision)

52.214-5000 APPARENT CLERICAL MISTAKES (MAR 1995)--EFARS

(a) For the purpose of initial evaluations of bids, the following will be utilized in the resolving arithmetic discrepancies found on the face of bidding schedule as submitted by the bidder:
(1) Obviously misplaced decimal points will be corrected;
(2) Discrepancy between unit price and extended price, the unit price will govern;
(3) Apparent errors in extension of unit prices will be corrected;
(4) Apparent errors in addition of lump-sum and extended prices will be corrected.
(b) For the purpose of bid evaluation, the government will proceed on the assumption that the bidder intends his bid to be evaluated on basis of the unit prices, the totals arrived at by resolution of arithmetic discrepancies as provided above and the bid will be so reflected on the abstract of bids.
(c) These correction procedures shall not be used to resolve any ambiguity concerning which bid is low.

(End of statement)

52.216-1 TYPE OF CONTRACT (APR 1984)

The Government contemplates award of a firm, fixed-price construction contract resulting from this solicitation.

(End of clause)

52.222-23 NOTICE OF REQUIREMENT FOR AFFIRMATIVE ACTION TO ENSURE EQUAL EMPLOYMENT OPPORTUNITY FOR CONSTRUCTION (FEB 1999)

(a) The offeror's attention is called to the Equal Opportunity clause and the Affirmative Action Compliance Requirements for Construction clause of this solicitation.

(b) The goals for minority and female participation, expressed in percentage terms for the Contractor's aggregate workforce in each trade on all construction work in the covered area, are as follows:

Goals for minority participation for each trade	Goals for female participation for each trade

SMSA Counties 32.3 Non-SMSA Counties 26.5	6.9

These goals are applicable to all the Contractor's construction work performed in the covered area. If the Contractor performs construction work in a geographical area located outside of the covered area, the Contractor shall apply the goals established for the geographical area where the work is actually performed. Goals are published periodically in the Federal Register in notice form, and these notices may be obtained from any Office of Federal Contract Compliance Programs office.

(c) The Contractor's compliance with Executive Order 11246, as amended, and the regulations in 41 CFR 60-4 shall be based on (1) its implementation of the Equal Opportunity clause, (2) specific affirmative action obligations required by the clause entitled "Affirmative Action Compliance Requirements for Construction," and (3) its efforts to meet the goals. The hours of minority and female employment and training must be substantially uniform throughout the length of the contract, and in each trade. The Contractor shall make a good faith effort to employ minorities and women evenly on each of its projects. The transfer of minority or female employees or trainees from Contractor to Contractor, or from project to project, for the sole purpose of meeting the Contractor's goals shall be a violation of the contract, Executive Order 11246, as amended, and the regulations in 41 CFR 60-4. Compliance with the goals will be measured against the total work hours performed.

(d) The Contractor shall provide written notification to the Deputy Assistant Secretary for Federal Contract Compliance, U.S. Department of Labor, within 10 working days following award of any construction subcontract in excess of $10,000 at any tier for construction work under the contract resulting from this solicitation. The notification shall list the --

(1) Name, address, and telephone number of the subcontractor;

(2) Employer's identification number of the subcontractor;

(3) Estimated dollar amount of the subcontract;

(4) Estimated starting and completion dates of the subcontract; and

(5) Geographical area in which the subcontract is to be performed.

(e) As used in this Notice, and in any contract resulting from this solicitation, the "covered area" is Economic Area 055, Memphis, TN, as follows:

SMSA Counties:

4920 Memphis, TN-AR-MS----------32.3
AR Crittenden; MS DeSoto, TN Shelby, TN Tipton

Non-SMSA Counties.....26.5

AR Clay; AR Craighead; AR Cross, AR Greene; AR Lawrence; AR Lee,
AR Mississippi; AR Phillips, AR Poinsett; AR Randolph; AR St. Francis;
MS Alcorn; MS Benton; MS Bolivar; MS Clahoun; MS Carroll;
MS Chickasaw; MS Clay; MS Coahoma; MS Grenada; MS Itawamba;
MS Lafayette; MS Lee; MS Leflore; MS Marshall; MS Monroe;
MS Montgomery; MS Panola; MS Pontotoc; MS Prentiss; MS Quitman;
MS Sunflower; MS Tallahatchie; MS Tate; MS Tippah; MS Tishomingo;
MS Union; MS Washington; MS Webster; MS Yalobusha; MO Dunklin;
MO New Madrid; MO Pemiscot, TN Benton; TN Carroll, TN Chester;
TN Crockett; TN Decator; TN Dyer; TN Fayette, TN Gibson; TN Hardeman

TN Hardin; TN Haywood; TN Henderson; TN Henry; TN Lake;
TN Lauderdale; TN McNairy; TN Madison; TN Obion;
TN Weakley.

(End of provision)

52.225-10 NOTICE OF BUY AMERICAN ACT REQUIREMENT--CONSTRUCTION MATERIALS (MAY 2002)

(a) Definitions. Construction material, domestic construction material, and foreign construction material, as used in this provision, are defined in the clause of this solicitation entitled "Buy American Act --Construction Materials" (Federal Acquisition Regulation (FAR) clause 52.225-9).

(b) Requests for determinations of inapplicability. An offeror requesting a determination regarding the inapplicability of the Buy American Act should submit the request to the Contracting Officer in time to allow a determination before submission of offers. The offeror shall include the information and applicable supporting data required by paragraphs (c) and (d) of the clause at FAR 52.225-9 in the request. If an offeror has not requested a determination regarding the inapplicability of the Buy American Act before submitting its offer, or has not received a response to a previous request, the offeror shall include the information and supporting data in the offer.

(c) Evaluation of offers. (1) The Government will evaluate an offer requesting exception to the requirements of the Buy American Act, based on claimed unreasonable cost of domestic construction material, by adding to the offered price the appropriate percentage of the cost of such foreign construction material, as specified in paragraph (b)(3)(i) of the clause at FAR 52.225-9.

(2) If evaluation results in a tie between an offeror that requested the substitution of foreign construction material based on unreasonable cost and an offeror that did not request an exception, the Contracting Officer will award to the offeror that did not request an exception based on unreasonable cost.

(d) Alternate offers.

(1) When an offer includes foreign construction material not listed by the Government in this solicitation in paragraph (b)(2) of the clause at FAR 52.225-9, the offeror also may submit an alternate offer based on use of equivalent domestic construction material.

(2) If an alternate offer is submitted, the offeror shall submit a separate Standard Form 1442 for the alternate offer, and a separate price comparison table prepared in accordance with paragraphs (c) and (d) of the clause at FAR 52.225-9 for the offer that is based on the use of any foreign construction material for which the Government has not yet determined an exception applies.

(3) If the Government determines that a particular exception requested in accordance with paragraph (c) of the clause at FAR 52.225-9 does not apply, the Government will evaluate only those offers based on use of the equivalent domestic construction material, and the offeror shall be required to furnish such domestic construction material. An offer based on use of the foreign construction material for which an exception was requested--

(i) Will be rejected as nonresponsive if this acquisition is conducted by sealed bidding; or

(ii) May be accepted if revised during negotiations.

(End of provision)

52.228-1 BID GUARANTEE (SEP 1996)

(a) Failure to furnish a bid guarantee in the proper form and amount, by the time set for opening of bids, may be cause for rejection of the bid.

(b) The bidder shall furnish a bid guarantee in the form of a firm commitment, e.g., bid bond supported by good and sufficient surety or sureties acceptable to the Government, postal money order, certified check, cashier's check, irrevocable letter of credit, or, under Treasury Department regulations, certain bonds or notes of the United States. The Contracting Officer will return bid guarantees, other than bid bonds, (1) to unsuccessful bidders as soon as practicable after the opening of bids, and (2) to the successful bidder upon execution of contractual documents and bonds (including any necessary coinsurance or reinsurance agreements), as required by the bid as accepted.-

(c) The amount of the bid guarantee shall be twenty (20%) percent of the bid price or $3,000,000.00, whichever is less.-

(d) If the successful bidder, upon acceptance of its bid by the Government within the period specified for acceptance, fails to execute all contractual documents or furnish executed bond(s) within 10 days after receipt of the forms by the bidder, the Contracting Officer may terminate the contract for default.-

(e) In the event the contract is terminated for default, the bidder is liable for any cost of acquiring the work that exceeds the amount of its bid, and the bid guarantee is available to offset the difference.

(End of clause)

52.233-2 SERVICE OF PROTEST (AUG 1996)

(a) Protests, as defined in section 33.101 of the Federal Acquisition Regulation, that are filed directly with an agency, and copies of any protests that are filed with the General Accounting Office (GAO), shall be served on the Contracting Officer (addressed as follows) by obtaining written and dated acknowledgment of receipt from

Chief, Contracting Division
ATTN: CEMVM-CT-Rm. 681
US Army, Engineer District, Memphis
167 North Main Street, B202
Memphis, Tennessee 38103-1894

(b) The copy of any protest shall be received in the office designated above within one day of filing a protest with the GAO.

(End of provision)

52.236-27 SITE VISIT (CONSTRUCTION) (FEB 1995) – ALTERNATE I (FEB 1995)

(a) The clauses at 52.236-2, Differing Site Conditions, and 52.236-3, Site Investigations and Conditions Affecting the Work, will be included in any contract awarded as a result of this solicitation. Accordingly, offerors or quoters are urged and expected to inspect the site where the work will be performed.

(b) An organized site visit has been scheduled for--

15 June and 22 June 2004

(c) BIDDERS DESIRING A SITE VISIT SHALL CONTACT THE AREA ENGINEER AT LEAST ONE DAY PRIOR TO THE SCHEDULED SITE VISIT.

NAME: Stephen P. Shankle
Area Engineer
ADDRESS: Caruthersville Area Office
706 Harry S. Truman Boulevard
Caruthersville, Missouri 63830-1268

TELEPHONE: 901/544-3074 or 573/333-1043

COLLECT TELEPHONE CALLS WILL NOT BE ACCEPTED

(End of provision)

252.209-7001 DISCLOSURE OF OWNERSHIP OR CONTROL BY THE GOVERNMENT OF A TERRORIST COUNTRY (MAR 1998)

(a) "Definitions."

As used in this provision --

(a) "Government of a terrorist country" includes the state and the government of a terrorist country, as well as any political subdivision, agency, or instrumentality thereof.

(2) "Terrorist country" means a country determined by the Secretary of State, under section 6(j)(1)(A) of the Export Administration Act of 1979 (50 U.S.C. App. 2405(j)(i)(A)), to be a country the government of which has repeatedly provided support for such acts of international terrorism. As of the date of this provision, terrorist countries include: Cuba, Iran, Iraq, Libya, North Korea, Sudan, and Syria.

(3) "Significant interest" means --

(i) Ownership of or beneficial interest in 5 percent or more of the firm's or subsidiary's securities. Beneficial interest includes holding 5 percent or more of any class of the firm's securities in "nominee shares," "street names," or some other method of holding securities that does not disclose the beneficial owner;

(ii) Holding a management position in the firm, such as a director or officer;

(iii) Ability to control or influence the election, appointment, or tenure of directors or officers in the firm;

(iv) Ownership of 10 percent or more of the assets of a firm such as equipment, buildings, real estate, or other tangible assets of the firm; or

(v) Holding 50 percent or more of the indebtness of a firm.

(b) "Prohibition on award."

In accordance with 10 U.S.C. 2327, no contract may be awarded to a firm or a subsidiary of a firm if the government of a terrorist country has a significant interest in the firm or subsidiary or, in the case of a subsidiary, the firm that owns the subsidiary, unless a waiver is granted by the Secretary of Defense.

(c) "Disclosure."

If the government of a terrorist country has a significant interest in the Offeror or a subsidiary of the Offeror, the Offeror shall disclosure such interest in an attachment to its offer. If the Offeror is a subsidiary, it shall also disclose any significant interest the government of a terrorist country has in any firm that owns or controls the subsidiary. The disclosure shall include --

(1) Identification of each government holding a significant interest; and

(2) A description of the significant interest held by each government.

(End of provision)

252.209-7002 DISCLOSURE OF OWNERSHIP OR CONTROL BY A FOREIGN GOVERNMENT (SEP 1994)

(a) Definitions. As used in this provision--

(1) "Entity controlled by a foreign government" means--

(i) Any domestic or foreign organization or corporation that is effectively owned or controlled by a foreign government; or

(ii) Any individual acting on behalf of a foreign government.

(2) "Effectively owned or controlled" means that a foreign government or any entity controlled by a foreign government has the power, either directly or indirectly, whether exercised or exercisable, to control or influence the election or appointment of the Offeror's officers, directors, partners, regents, trustees, or a majority of the Offeror's board of directors by means, e.g., ownership, contract, or operation of law.

(3) "Foreign government" means any governing body organized and existing under the laws of any country other than the United States and its possessions and trust territories and any agent or instrumentality of that government.

(4) "Proscribed information" means--

(i) Top Secret information;

(ii) Communications Security (COMSEC) information, except classified keys used to operate secure telephone unites (STU IIIs);

(iii) Restricted Data as defined in the U.S. Atomic Energy Act of 1954, as amended;

(iv) Special Access Program (SAP) information; or

(v) Sensitive Compartmental Information (SCI).

(b) Prohibition on award. No contract under a national security program may be awarded to a company owned by an entity controlled by a foreign government if that company requires access to proscribed information to perform the contract, unless the Secretary of Defense or designee has waived application of 10 U.S.C.2536(a).

(c) Disclosure.
The Offeror shall disclose any interest a foreign government has in the Offeror when that interest constitutes control by a foreign government as defined in this provision. If the Offeror is a subsidiary, it shall also disclose any

reportable interest a foreign government has in any entity that owns or controls the subsidiary, including reportable interest concerning the Offeror's immediate parent, intermediate parents, and the ultimate parent. Use separate paper as needed, and provide the information in the following format:

Offeror's Point of Contact for Questions about Disclosure
(Name and Phone Number with Country Code, City Code and Area Code, as applicable)

Name and Address of Offeror

Name and Address of Entity Controlled by a Foreign Government	Description of Interest, Ownership Percentage, and Identification of Foreign Government

(End of provision)

252.211-7001 AVAILABILITY OF SPECIFICATIONS AND STANDARDS NOT LISTED IN DODISS, DATA ITEM DESCRIPTIONS NOT LISTED IN DOD 5010.12-L, AND PLANS, DRAWINGS, AND OTHER PERTINENT DOCUMENTS. (DEC 1991)

Offerors may obtain the specifications, standards, plans, drawings, data item descriptions, and other pertinent documents cited in this solicitation by submitting a request to:

US Army, Engineer District, Memphis
ATTN: CEMVM-CT
167 N. Main St, B-202
Memphis, TN 38103-1894

http://www.mvm.usace.army.mil/contracting/Ebs/AdvertisedSolicitations.asp

Include the number of the solicitation and the title and number of the specification, standard, plan, drawing, or other pertinent document.

(End of Clause)

252.236-7008 CONTRACT PRICES - BIDDING SCHEDULES. (DEC 1991)

(a) The Government's payment for the items listed in the Bidding Schedule shall constitute full compensation to the Contractor for --

(1) Furnishing all plant, labor, equipment, appliances, and materials; and

(2) Performing all operations required to complete the work in conformity with the drawings and specifications.

(b) The Contractor shall include in the prices for the items listed in the Bidding Schedule all costs for work in the specifications, whether or not specifically listed in the Bidding Schedule.

Section 00600 - REPRESENTATIONS AND CERTIFICATIONS

SECTION 00600

SECTION 00600
REPRESENTATIONS AND CERTIFICATIONS
TABLE OF CONTENTS

52.0-4031	Corporate Certification	OCT 1999
52.203-2	Certificate Of Independent Price Determination	APR 1985
52.203-11	Certification And Disclosure Regarding Payments To Influence Certain Federal Transactions	APR 1991
52.204-3	Taxpayer Identification	OCT 1998
52.204-5	Women-Owned Business (Other Than Small Business)	MAY 1999
52.209-5	Certification Regarding Debarment, Suspension, Proposed Debarment, And Other Responsibility Matters	DEC 2001
52.219-1 Alt I	Small Business Program Representations (Apr 2002) Alternate I	APR 2002
52.219-2	Equal Low Bids	OCT 1995
52.219-19	Small Business Concerns Representation For The Small Business Competitiveness Demonstration Program	OCT 2000
52.222-22	Previous Contracts And Compliance Reports	FEB 1999
52.222-38	Compliance With Veterans' Employment Reporting Requirements	DEC 2001
52.223-4	Recovered Material Certification	OCT 1997
52.223-13	Certification of Toxic Chemical Release Reporting	AUG 2003
252.209-7001	Disclosure of Ownership or Control by the Government of a Terrorist Country	MAR 1998
252.209-7002	Disclosure Of Ownership Or Control By A Foreign Government	SEP 1994
252.247-7022	Representation Of Extent Of Transportation Of Supplies By Sea	AUG 1992

CLAUSES INCORPORATED BY FULL TEXT

52.0-4031 CORPORATE CERTIFICATION

IF A BIDDER IS A CORPORATION OR IF CORPORATION IS PARTICIPATING IN A JOINT VENTURE, PLEASE COMPLETE THE FOLLOWING CERTIFICATION:

I, _____, certify that I am secretary of

the corporation named as Contractor herein; that

_____ who signed this contract on behalf of the

Contractor; was then _____ of said

corporation; that said contract was duly signed for and on behalf of

said corporation by authority of its governing body and is within the

scope of its corporate powers.

(CORPORATE SEAL)

_____
(Secretary)

IF A CORPORATION IS PARTICIPATING AS A JOINT VENTURE, ITS SECRETARY MUST SUBMIT A CERTIFICATE STATING THE CORPORATION IS AUTHORIZED TO PARTICIPATE.

52.203-2 CERTIFICATE OF INDEPENDENT PRICE DETERMINATION (APR 1985)

(a) The offeror certifies that --

(1) The prices in this offer have been arrived at independently, without, for the purpose of restricting competition, any consultation, communication, or agreement with any other offeror or competitor relating to –

(i) Those prices,

(ii) The intention to submit an offer, or

(iii) The methods of factors used to calculate the prices offered:

(2) The prices in this offer have not been and will not be knowingly disclosed by the offeror, directly or indirectly, to any other offeror or competitor before bid opening (in the case of a sealed bid solicitation) or contract award (in the case of a negotiated solicitation) unless otherwise required by law; and

(3) No attempt has been made or will be made by the offeror to induce any other concern to submit or not to submit an offer for the purpose of restricting competition.

(b) Each signature on the offer is considered to be a certification by the signatory that the signatory --

(1) Is the person in the offeror's organization responsible for determining the prices offered in this bid or proposal, and that the signatory has not participated and will not participate in any action contrary to subparagraphs (a)(1) through (a)(3) of this provision; or

(2) (i) Has been authorized, in writing, to act as agent for the following principals in certifying that those principals have not participated, and will not participate in any action contrary to subparagraphs (a)(1) through (a)(3) of this provison _____ (insert full name of person(s) in the offeror's organization responsible for determining the prices offered in this bid or proposal, and the title of his or her position in the offeror's organization);

(ii) As an authorized agent, does certify that the principals named in subdivision (b)(2)(i) above have not participated, and will not participate, in any action contrary to subparagraphs (a)(1) through (a)(3) above; and

(iii) As an agent, has not personally participated, and will not participate, in any action contrary to subparagraphs (a)(1) through (a)(3) of this provision.

(c) If the offeror deletes or modifies subparagraph (a)(2) of this provision, the offeror must furnish with its offer a signed statement setting forth in detail the circumstances of the disclosure.

(End of clause)

52.203-11 CERTIFICATION AND DISCLOSURE REGARDING PAYMENTS TO INFLUENCE CERTAIN FEDERAL TRANSACTIONS (APR 1991)

(a) The definitions and prohibitions contained in the clause, at FAR 52.203-12, Limitation on Payments to Influence Certain Federal Transactions, included in this solicitation, are hereby incorporated by reference in paragraph (b) of this Certification.

(b) The offeror, by signing its offer, hereby certifies to the best of his or her knowledge and belief that on or after December 23, 1989,--

(1) No Federal appropriated funds have been paid or will be paid to any person for influencing or attempting to influence an officer or employee of any agency, a Member of Congress, an officer or employee of Congress, or an employee of a Member of Congress on his or her behalf in connection with the awarding of any Federal contract, the making of any Federal grant, the making of any Federal loan, the entering into of any cooperative agreement, and the extension, continuation, renewal, amendment or modification of any Federal contract, grant, loan, or cooperative agreement;

(2) If any funds other than Federal appropriated funds (including profit or fee received under a covered Federal

transaction) have been paid, or will be paid to any person for influencing or attempting to influence an officer or employee of any agency, a Member of Congress, an officer or employee of Congress or an employee of a Member of Congress on his or her behalf in connection with this solicitation, the offeror shall complete and submit, with its offer, OMB standard form LLL, Disclosure of Lobbying Activities, to the Contracting Officer; and

(3) He or she will include the language of this certification in all subcontract awards at any tier and require that all recipients of subcontract awards in excess of $100,000 shall certify and disclose accordingly.

(1) Submission of this certification and disclosure is a prerequisite for making or entering into this contract imposed by section 1352, title 31, United States Code. Any person who makes an expenditure prohibited under this provision, shall be subject to a civil penalty of not less than $10,000, and not more than $100,000, for each such failure.

(End of provision)

52.204-3 TAXPAYER IDENTIFICATION (OCT 1998)

(a) Definitions.

"Common parent," as used in this provision, means that corporate entity that owns or controls an affiliated group of corporations that files its Federal income tax returns on a consolidated basis, and of which the offeror is a member.

"Taxpayer Identification Number (TIN)," as used in this provision, means the number required by the Internal Revenue Service (IRS) to be used by the offeror in reporting income tax and other returns. The TIN may be either a Social Security Number or an Employer Identification Number.

(b) All offerors must submit the information required in paragraphs (d) through (f) of this provision to comply with debt collection requirements of 31 U.S.C. 7701(c) and 3325(d), reporting requirements of 26 U.S.C. 6041, 6041A, and 6050M, and implementing regulations issued by the IRS. If the resulting contract is subject to the payment reporting requirements described in Federal Acquisition Regulation (FAR) 4.904, the failure or refusal by the offeror to furnish the information may result in a 31 percent reduction of payments otherwise due under the contract.

(c) The TIN may be used by the Government to collect and report on any delinquent amounts arising out of the offeror's relationship with the Government (31 U.S.C. 7701(c)(3)). If the resulting contract is subject to the payment reporting requirements described in FAR 4.904, the TIN provided hereunder may be matched with IRS records to verify the accuracy of the offeror's TIN.

(d) Taxpayer Identification Number (TIN).

___ TIN:._____

___ TIN has been applied for.

___ TIN is not required because:

___ Offeror is a nonresident alien, foreign corporation, or foreign partnership that does not have income effectively connected with the conduct of a trade or business in the United States and does not have an office or place of business or a fiscal paying agent in the United States;

___ Offeror is an agency or instrumentality of a foreign government;

___ Offeror is an agency or instrumentality of the Federal Government.

(e) Type of organization.

___ Sole proprietorship;

___ Partnership;

___ Corporate entity (not tax-exempt);

___ Corporate entity (tax-exempt);

___ Government entity (Federal, State, or local);

___ Foreign government;

___ International organization per 26 CFR 1.6049-4;

___ Other _____

(f) Common parent.

___ Offeror is not owned or controlled by a common parent as defined in paragraph (a) of this provision.

___ Name and TIN of common parent:

Name _____

TIN _____

(End of provision)

52.204-5 WOMEN-OWNED BUSINESS (OTHER THAN SMALL BUSINESS) (MAY 1999)

(a) Definition. Women-owned business concern, as used in this provision, means a concern that is at least 51 percent owned by one or more women; or in the case of any publicly owned business, at least 51 percent of its stock is owned by one or more women; and whose management and daily business operations are controlled by one or more women.

(b) Representation. [Complete only if the offeror is a women-owned business concern and has not represented itself as a small business concern in paragraph (b)(1) of FAR 52.219-1, Small Business Program Representations, of this solicitation.] The offeror represents that it ( ) is a women-owned business concern.

(End of provision)

52.209-5 CERTIFICATION REGARDING DEBARMENT, SUSPENSION, PROPOSED DEBARMENT, AND OTHER RESPONSIBILITY MATTERS (DEC 2001)

(a)(1) The Offeror certifies, to the best of its knowledge and belief, that-

(i) The Offeror and/or any of its Principals-

(A) Are ( ) are not ( ) presently debarred, suspended, proposed for debarment, or declared ineligible for the award of contracts by any Federal agency;

(B) Have ( ) have not ( ), within a three-year period preceding this offer, been convicted of or had a civil judgment rendered against them for: commission of fraud or a criminal offense in connection with obtaining, attempting to obtain, or performing a public (Federal, state, or local) contract or subcontract; violation of Federal or state antitrust statutes relating to the submission of offers; or commission of embezzlement, theft, forgery, bribery, falsification or destruction of records, making false statements, tax evasion, or receiving stolen property; and

(C) Are ( ) are not ( ) presently indicted for, or otherwise criminally or civilly charged by a governmental entity with, commission of any of the offenses enumerated in paragraph (a)(1)(i)(B) of this provision.

(ii) The Offeror has ( ) has not ( ), within a three-year period preceding this offer, had one or more contracts terminated for default by any Federal agency.

(2) "Principals," for the purposes of this certification, means officers; directors; owners; partners; and, persons having primary management or supervisory responsibilities within a business entity (e.g., general manager; plant manager; head of a subsidiary, division, or business segment, and similar positions).

This Certification Concerns a Matter Within the Jurisdiction of an Agency of the United States and the Making of a False, Fictitious, or Fraudulent Certification May Render the Maker Subject to Prosecution Under Section 1001, Title 18, United States Code.

(b) The Offeror shall provide immediate written notice to the Contracting Officer if, at any time prior to contract award, the Offeror learns that its certification was erroneous when submitted or has become erroneous by reason of changed circumstances.

(c) A certification that any of the items in paragraph (a) of this provision exists will not necessarily result in withholding of an award under this solicitation. However, the certification will be considered in connection with a determination of the Offeror's responsibility. Failure of the Offeror to furnish a certification or provide such additional information as requested by the Contracting Officer may render the Offeror nonresponsible.

(d) Nothing contained in the foregoing shall be construed to require establishment of a system of records in order to render, in good faith, the certification required by paragraph (a) of this provision. The knowledge and information of an Offeror is not required to exceed that which is normally possessed by a prudent person in the ordinary course of business dealings.

(e) The certification in paragraph (a) of this provision is a material representation of fact upon which reliance was placed when making award. If it is later determined that the Offeror knowingly rendered an erroneous certification, in addition to other remedies available to the Government, the Contracting Officer may terminate the contract resulting from this solicitation for default.

(End of provision)

52.219-1 SMALL BUSINESS PROGRAM REPRESENTATIONS (APR 2002) - ALTERNATE I (APR 2002)

(a)(1) The North American Industry Classification System (NAICS) code for this acquisition is **237110** .

(2) The small business size standard is **$28,500,000.00**.

(3) The small business size standard for a concern which submits an offer in its own name, other than on a construction or service contract, but which proposes to furnish a product which it did not itself manufacture, is 500 employees.

(b) Representations. (1) The offeror represents as part of its offer that it ( ) is, ( ) is not a small business concern.

(2) (Complete only if the offeror represented itself as a small business concern in paragraph (b)(1) of this provision.) The offeror represents, for general statistical purposes, that it ( ) is, ( ) is not a small disadvantaged business concern as defined in 13 CFR 124.1002.

(3) (Complete only if the offeror represented itself as a small business concern in paragraph (b)(1) of this provision.) The offeror represents as part of its offer that it ( ) is, ( ) is not a women-owned small business concern.

(4) (Complete only if the offeror represented itself as a small business concern in paragraph (b)(1) of this provision.) The offeror represents as part of its offer that it ( ) is, ( ) is not a veteran-owned small business concern.

(5) (Complete only if the offeror represented itself as a veteran-owned small business concern in paragraph (b)(4) of this provision.) The offeror represents as part of its offer that it ( ) is, ( ) is not a service-disabled veteran-owned small business concern.

(6) [Complete only if the offeror represented itself as a small business concern in paragraph (b)(1) of this provision.] The offeror represents, as part of its offer, that--

(i) It ( ) is, ( ) is not a HUBZone small business concern listed, on the date of this representation, on the List of Qualified HUBZone Small Business Concerns maintained by the Small Business Administration, and no material change in ownership and control, principal office, or HUBZone employee percentage has occurred since it was certified by the Small Business Administration in accordance with 13 CFR part 126; and

(ii) It ( ) is, ( ) is not a joint venture that complies with the requirements of 13 CFR part 126, and the representation in paragraph (b)(6)(i) of this provision is accurate for the HUBZone small business concern or concerns that are participating in the joint venture. (The offeror shall enter the name or names of the HUBZone small business concern or concerns that are participating in the joint venture:_____.) Each HUBZone small business concern participating in the joint venture shall submit a separate signed copy of the HUBZone representation.

(7) (Complete if offeror represented itself as disadvantaged in paragraph (b)(2) of this provision.) The offeror shall check the category in which its ownership falls:

____ Black American.

____ Hispanic American.

____ Native American (American Indians, Eskimos, Aleuts, or Native Hawaiians).

____ Asian-Pacific American (persons with origins from Burma, Thailand, Malaysia, Indonesia, Singapore, Brunei, Japan, China, Taiwan, Laos, Cambodia (Kampuchea), Vietnam, Korea, The Philippines, U.S. Trust Territory of the Pacific Islands (Republic of Palau), Republic of the Marshall Islands, Federated States of Micronesia, the Commonwealth of the Northern Mariana Islands, Guam, Samoa, Macao, Hong Kong, Fiji, Tonga, Kiribati, Tuvalu, or Nauru).

____ Subcontinent Asian (Asian-Indian) American (persons with origins from India, Pakistan, Bangladesh, Sri Lanka, Bhutan, the Maldives Islands, or Nepal).

____ Individual/concern, other than one of the preceding.

(c) Definitions. As used in this provision--

Service-disabled veteran-owned small business concern--

(1) Means a small business concern--

(i) Not less than 51 percent of which is owned by one or more service-disabled veterans or, in the case of any publicly owned business, not less than 51 percent of the stock of which is owned by one or more service-disabled veterans; and

(ii) The management and daily business operations of which are controlled by one or more service-disabled veterans or, in the case of a veteran with permanent and severe disability, the spouse or permanent caregiver of such veteran.

(2) Service-disabled veteran means a veteran, as defined in 38 U.S.C. 101(2), with a disability that is service-connected, as defined in 38 U.S.C. 101(16).

"Small business concern," means a concern, including its affiliates, that is independently owned and operated, not dominant in the field of operation in which it is bidding on Government contracts, and qualified as a small business under the criteria in 13 CFR Part 121 and the size standard in paragraph (a) of this provision.

Veteran-owned small business concern means a small business concern--

(1) Not less than 51 percent of which is owned by one or more veterans (as defined at 38 U.S.C. 101(2)) or, in the case of any publicly owned business, not less than 51 percent of the stock of which is owned by one or more veterans; and

(2) The management and daily business operations of which are controlled by one or more veterans.

"Women-owned small business concern," means a small business concern --

(1) That is at least 51 percent owned by one or more women or, in the case of any publicly owned business, at least 51 percent of the stock of which is owned by one or more women; or

(2) Whose management and daily business operations are controlled by one or more women.

(d) Notice.

(1) If this solicitation is for supplies and has been set aside, in whole or in part, for small business concerns, then the clause in this solicitation providing notice of the set-aside contains restrictions on the source of the end items to be furnished.

(2) Under 15 U.S.C. 645(d), any person who misrepresents a firm's status as a small, HUBZone small, small disadvantaged, or women-owned small business concern in order to obtain a contract to be awarded under the preference programs established pursuant to section 8(a), 8(d), 9, or 15 of the Small Business Act or any other provision of Federal law that specifically references section 8(d) for a definition of program eligibility, shall--

(i) Be punished by imposition of fine, imprisonment, or both;

(ii) Be subject to administrative remedies, including suspension and debarment; and

(iii) Be ineligible for participation in programs conducted under the authority of the Act.

(End of provision)

52.219-2 EQUAL LOW BIDS. (OCT 1995)

(a) This provision applies to small business concerns only.

(b) The bidder's status as a labor surplus area (LSA) concern may affect entitlement to award in case of tie bids. If the bidder wishes to be considered for this priority, the bidder must identify, in the following space, the LSA in which the costs to be incurred on account of manufacturing or production (by the bidder or the first-tier subcontractors) amount to more than 50 percent of the contract price.

_____

_____

(c) Failure to identify the labor surplus area as specified in paragraph (b) of this provision will preclude the bidder from receiving priority consideration. If the bidder is awarded a contract as a result of receiving priority consideration under this provision and would not have otherwise received award, the bidder shall perform the contract or cause the contract to be performed in accordance with the obligations of an LSA concern.

52.219-19 SMALL BUSINESS CONCERN REPRESENTATION FOR THE SMALL BUSINESS COMPETITIVENESS DEMONSTRATION PROGRAM (OCT 2000)

(a) Definition.

"Emerging small business" as used in this solicitation, means a small business concern whose size is no greater than 50 percent of the numerical size standard applicable to the North American Industry Classification System (NAICS) code assigned to a contracting opportunity.

(b) [Complete only if the Offeror has represented itself under the provision at 52.219-1 as a small business concern under the size standards of this solicitation.] The Offeror [ ] is, [ ] is not an emerging small business.

(c) (Complete only if the Offeror is a small business or an emerging small business, indicating its size range.)

Offeror's number of employees for the past 12 months (check this column if size standard stated in solicitation is expressed in terms of number of employees) or Offeror's average annual gross revenue for the last 3 fiscal years (check this column if size standard stated in solicitation is expressed in terms of annual receipts). (Check one of the following.)

No. of Employees	Avg. Annual Gross Revenues
____ 50 or fewer	____ $1 million or less
____ 51 - 100	____ $1,000,001 - $2 million
____ 101 - 250	____ $2,000,001 - $3.5 million
____ 251 - 500	____ $3,500,001 - $5 million
____ 501 - 750	____ $5,000,001 - $10 million
____ 751 - 1,000	____ $10,000,001 - $17 million

____ Over 1,000 ____ Over $17 million

(End of provision)

52.222-22 PREVIOUS CONTRACTS AND COMPLIANCE REPORTS (FEB 1999)

The offeror represents that --

(a) ( ) It has, ( ) has not participated in a previous contract or subcontract subject to the Equal Opportunity clause of this solicitation;

(b) ( ) It has, ( ) has not, filed all required compliance reports; and

(c) Representations indicating submission of required compliance reports, signed by proposed subcontractors, will be obtained before subcontract awards.

(End of provision)

52.222-38 COMPLIANCE WITH VETERANS' EMPLOYMENT REPORTING REQUIREMENTS (DEC 2001)

By submission of its offer, the offeror represents that, if it is subject to the reporting requirements of 38 U.S.C. 4212(d) (i.e., if it has any contract containing Federal Acquisition Regulation clause 52.222-37, Employment Reports on Special Disabled Veterans, Veterans of the Vietnam Era, and Other Eligible Veterans), it has submitted the most recent VETS-100 Report required by that clause.

(End of provision)

52.223-4 RECOVERED MATERIAL CERTIFICATION (OCT 1997)

As required by the Resource Conservation and Recovery Act of 1976 (42 U.S.C. 6962(c)(3)(A)(i)), the offeror certifies, by signing this offer, that the percentage of recovered materials to be used in the performance of the contract will be at least the amount required by the applicable contract specifications.

(End of provision)

52.223-13 CERTIFICATION OF TOXIC CHEMICAL RELEASE REPORTING (AUG 2003)

(a) Executive Order 13148, of April 21, 2000, Greening the Government through Leadership in Environmental Management, requires submission of this certification as a prerequisite for contract award.

(b) By signing this offer, the offeror certifies that--

(1) As the owner or operator of facilities that will be used in the performance of this contract that are subject to the filing and reporting requirements described in section 313 of the Emergency Planning and Community Right-to-Know Act of 1986 (EPCRA) (42 U.S.C. 11023) and section 6607 of the Pollution Prevention Act of 1990 (PPA) (42 U.S.C. 13106), the offeror will file and continue to file for such facilities for the life of the contract the Toxic

Chemical Release Inventory Form (Form R) as described in sections 313(a) and (g) of EPCRA and section 6607 of PPA; or

(2) None of its owned or operated facilities to be used in the performance of this contract is subject to the Form R filing and reporting requirements because each such facility is exempt for at least one of the following reasons: (Check each block that is applicable.)

( ) (i) The facility does not manufacture, process, or otherwise use any toxic chemicals listed in 40 CFR 372.65;

( ) (ii) The facility does not have 10 or more full-time employees as specified in section 313.(b)(1)(A) of EPCRA 42 U.S.C. 11023(b)(1)(A);

( ) (iii) The facility does not meet the reporting thresholds of toxic chemicals established under section 313(f) of EPCRA, 42 U.S.C. 11023(f) (including the alternate thresholds at 40 CFR 372.27, provided an appropriate certification form has been filed with EPA);

( ) (iv) The facility does not fall within the following Standard Industrial Classification (SIC) codes or their corresponding North American Industry Classification System sectors:

(A) Major group code 10 (except 1011, 1081, and 1094.

(B) Major group code 12 (except 1241).

(C) Major group codes 20 through 39.

(D) Industry code 4911, 4931, or 4939 (limited to facilities that combust coal and/or oil for the purpose of generating power for distribution in commerce).

(E) Industry code 4953 (limited to facilities regulated under the Resource Conservation and Recovery Act, Subtitle C (42 U.S.C. 6921, et seq.), 5169, 5171, or 7389 (limited to facilities primarily engaged in solvent recovery services on a contract or fee basis); or

( ) (v) The facility is not located within the United States or its outlying areas.

(End of clause)

252.209-7001 DISCLOSURE OF OWNERSHIP OR CONTROL BY THE GOVERNMENT OF A TERRORIST COUNTRY (MAR 1998)

(a) "Definitions."

As used in this provision --

(a) "Government of a terrorist country" includes the state and the government of a terrorist country, as well as any political subdivision, agency, or instrumentality thereof.

(2) "Terrorist country" means a country determined by the Secretary of State, under section 6(j)(1)(A) of the Export Administration Act of 1979 (50 U.S.C. App. 2405(j)(i)(A)), to be a country the government of which has repeatedly provided support for such acts of international terrorism. As of the date of this provision, terrorist countries include: Cuba, Iran, Iraq, Libya, North Korea, Sudan, and Syria.

(3) "Significant interest" means --

(i) Ownership of or beneficial interest in 5 percent or more of the firm's or subsidiary's securities. Beneficial interest includes holding 5 percent or more of any class of the firm's securities in "nominee shares," "street names," or some other method of holding securities that does not disclose the beneficial owner;

(ii) Holding a management position in the firm, such as a director or officer;

(iii) Ability to control or influence the election, appointment, or tenure of directors or officers in the firm;

(iv) Ownership of 10 percent or more of the assets of a firm such as equipment, buildings, real estate, or other tangible assets of the firm; or

(v) Holding 50 percent or more of the indebtness of a firm.

(b) "Prohibition on award."

In accordance with 10 U.S.C. 2327, no contract may be awarded to a firm or a subsidiary of a firm if the government of a terrorist country has a significant interest in the firm or subsidiary or, in the case of a subsidiary, the firm that owns the subsidiary, unless a waiver is granted by the Secretary of Defense.

(c) "Disclosure."

If the government of a terrorist country has a significant interest in the Offeror or a subsidiary of the Offeror, the Offeror shall disclosure such interest in an attachment to its offer. If the Offeror is a subsidiary, it shall also disclose any significant interest the government of a terrorist country has in any firm that owns or controls the subsidiary. The disclosure shall include --

(1) Identification of each government holding a significant interest; and

(2) A description of the significant interest held by each government.

(End of provision)

252.209-7002 DISCLOSURE OF OWNERSHIP OR CONTROL BY A FOREIGN GOVERNMENT (SEP 1994)

(a) Definitions. As used in this provision--

(1) "Entity controlled by a foreign government" means--

(i) Any domestic or foreign organization or corporation that is effectively owned or controlled by a foreign government; or

(ii) Any individual acting on behalf of a foreign government.

(2) "Effectively owned or controlled" means that a foreign government or any entity controlled by a foreign government has the power, either directly or indirectly, whether exercised or exercisable, to control or influence the election or appointment of the Offeror's officers, directors, partners, regents, trustees, or a majority of the Offeror's board of directors by means, e.g., ownership, contract, or operation of law.

(3) "Foreign government" means any governing body organized and existing under the laws of any country other than the United States and its possessions and trust territories and any agent or instrumentality of that government.

(4) "Proscribed information" means--

(i) Top Secret information;

(ii) Communications Security (COMSEC) information, except classified keys used to operate secure telephone unites (STU IIIs);

(iii) Restricted Data as defined in the U.S. Atomic Energy Act of 1954, as amended;

(iv) Special Access Program (SAP) information; or

(v) Sensitive Compartmental Information (SCI).

(b) Prohibition on award. No contract under a national security program may be awarded to a company owned by an entity controlled by a foreign government if that company requires access to proscribed information to perform the contract, unless the Secretary of Defense or designee has waived application of 10 U.S.C.2536(a).

(c) Disclosure.
The Offeror shall disclose any interest a foreign government has in the Offeror when that interest constitutes control by a foreign government as defined in this provision. If the Offeror is a subsidiary, it shall also disclose any reportable interest a foreign government has in any entity that owns or controls the subsidiary, including reportable interest concerning the Offeror's immediate parent, intermediate parents, and the ultimate parent. Use separate paper as needed, and provide the information in the following format:

Offeror's Point of Contact for Questions about Disclosure
(Name and Phone Number with Country Code, City Code and Area Code, as applicable)

Name and Address of Offeror

Name and Address of Entity Controlled by a Foreign Government	Description of Interest, Ownership Percentage, and Identification of Foreign Government

(End of provision)

252.247-7022 REPRESENTATION OF EXTENT OF TRANSPORTATION BY SEA (AUG 1992)

(a) The Offeror shall indicate by checking the appropriate blank in paragraph (b) of this provision whether transportation of supplies by sea is anticipated under the resultant contract. The term supplies is defined in the Transportation of Supplies by Sea clause of this solicitation.

(b) Representation. The Offeror represents that it:

____ (1) Does anticipate that supplies will be transported by sea in the performance of any contract or subcontract resulting from this solicitation.

____ (2) Does not anticipate that supplies will be transported by sea in the performance of any contract or subcontract resulting from this solicitation.

(c) Any contract resulting from this solicitation will include the Transportation of Supplies by Sea clause. If the Offeror represents that it will not use ocean transportation, the resulting contract will also include the Defense FAR Supplement clause at 252.247-7024, Notification of Transportation of Supplies by Sea.

(End of provision)

Section 00700 - CONTRACT CLAUSES

SECTION 00700

SECTION 00700
CONTRACT CLAUSES
TABLE OF CONTENTS

52.202-1 Alt I	Definitions (Dec 2001) --Alternate I	MAY 2001
52.203-2	Certificate Of Independent Price Determination	APR 1985
52.203-3	Gratuities	APR 1984
52.203-5	Covenant Against Contingent Fees	APR 1984
52.203-6	Restrictions On Subcontractor Sales To The Government	JUL 1995
52.203-7	Anti-Kickback Procedures	JUL 1995
52.203-8	Cancellation, Rescission, and Recovery of Funds for Illegal or Improper Activity	JAN 1997
52.203-10	Price Or Fee Adjustment For Illegal Or Improper Activity	JAN 1997
52.203-12	Limitation On Payments To Influence Certain Federal Transactions	JUN 2003
52.204-4	Printed or Copied Double-Sided on Recycled Paper	AUG 2000
52.204-7	Central Contractor Registration	OCT 2003
52.209-6	Protecting the Government's Interest When Subcontracting With Contractors Debarred, Suspended, or Proposed for Debarment	JUL 1995
52.211-10	Commencement, Prosecution, and Completion of Work	APR 1984
52.211-12	Liquidated Damages--Construction	SEP 2000
52.211-13	Time Extensions	SEP 2000
52.211-18	Variation in Estimated Quantity	APR 1984
52.219-4	Notice of Price Evaluation Preference for HUBZone Small Business Concerns	JAN 1999
52.219-8	Utilization of Small Business Concerns	OCT 2000
52.219-9 Alt I	Small Business Subcontracting Plan (Jan 2002) Alternate I	OCT 2001
52.219-14	Limitations On Subcontracting	DEC 1996
52.219-16	Liquidated Damages-Subcontracting Plan	JAN 1999
52.222-3	Convict Labor	JUN 2003
52.222-4	Contract Work Hours and Safety Standards Act - Overtime Compensation	SEP 2000
52.222-6	Davis Bacon Act	FEB 1995
52.222-7	Withholding of Funds	FEB 1988
52.222-8	Payrolls and Basic Records	FEB 1988
52.222-9	Apprentices and Trainees	FEB 1988
52.222-10	Compliance with Copeland Act Requirements	FEB 1988
52.222-11	Subcontracts (Labor Standards)	FEB 1988
52.222-12	Contract Termination-Debarment	FEB 1988
52.222-13	Compliance with Davis-Bacon and Related Act Regulations.	FEB 1988
52.222-14	Disputes Concerning Labor Standards	FEB 1988
52.222-15	Certification of Eligibility	FEB 1988
52.222-21	Prohibition Of Segregated Facilities	FEB 1999
52.222-26	Equal Opportunity	APR 2002
52.222-27	Affirmative Action Compliance Requirements for Construction	FEB 1999
52.222-35	Equal Opportunity For Special Disabled Veterans, Veterans of the Vietnam Era, and Other Eligible Veterans	DEC 2001

52.222-36	Affirmative Action For Workers With Disabilities	JUN 1998
52.222-37	Employment Reports On Special Disabled Veterans, Veterans Of The Vietnam Era, and Other Eligible Veterans	DEC 2001
52.223-3	Hazardous Material Identification And Material Safety Data	JAN 1997
52.223-6	Drug-Free Workplace	MAY 2001
52.223-14	Toxic Chemical Release Reporting	AUG 2003
52.225-9	Buy American Act--Construction Materials	JUN 2003
52.225-13	Restrictions on Certain Foreign Purchases	DEC 2003
52.227-1	Authorization and Consent	JUL 1995
52.227-2	Notice And Assistance Regarding Patent And Copyright Infringement	AUG 1996
52.227-4	Patent Indemnity-Construction Contracts	APR 1984
52.228-2	Additional Bond Security	OCT 1997
52.228-5	Insurance - Work On A Government Installation	JAN 1997
52.228-11	Pledges Of Assets	FEB 1992
52.228-12	Prospective Subcontractor Requests for Bonds	OCT 1995
52.228-14	Irrevocable Letter of Credit	DEC 1999
52.228-15	Performance and Payment Bonds--Construction	JUL 2000
52.229-3	Federal, State And Local Taxes	APR 2003
52.231-5000	Equipment Ownership and Operating Expense Schedule (Mar 1995)	MAY 1999
52.232-5	Payments under Fixed-Price Construction Contracts	SEP 2002
52.232-13	Notice Of Progress Payments	APR 1984
52.232-16	Progress Payments	APR 2003
52.232-17	Interest	JUN 1996
52.232-23	Assignment Of Claims	JAN 1986
52.232-27	Prompt Payment for Construction Contracts	OCT 2003
52.232-33	Payment by Electronic Funds Transfer--Central Contractor Registration	OCT 2003
52.232-5001	Continuing Contracts (Mar 1995)	MAY 1999
52.233-1	Disputes	JUL 2002
52.233-3	Protest After Award	AUG 1996
52.236-1	Performance of Work by the Contractor	APR 1984
52.236-2	Differing Site Conditions	APR 1984
52.236-3	Site Investigation and Conditions Affecting the Work	APR 1984
52.236-4	Physical Data	APR 1984
52.236-5	Material and Workmanship	APR 1984
52.236-6	Superintendence by the Contractor	APR 1984
52.236-7	Permits and Responsibilities	NOV 1991
52.236-8	Other Contracts	APR 1984
52.236-9	Protection of Existing Vegetation, Structures, Equipment, Utilities, and Improvements	APR 1984
52.236-10	Operations and Storage Areas	APR 1984
52.236-11	Use and Possession Prior to Completion	APR 1984
52.236-12	Cleaning Up	APR 1984
52.236-13 Alt I	Accident Prevention (Nov 1991) - Alternate I	NOV 1991
52.236-15	Schedules for Construction Contracts	APR 1984
52.236-16 Alt I	Quantity Surveys (Apr 1984) - Alternate I	APR 1984
52.236-17	Layout of Work	APR 1984
52.236-21 Alt II	Specifications and Drawings for Construction Alternate II	APR 1984
52.236-26	Preconstruction Conference	FEB 1995
52.236-5000	Plant and Material Removal After Contract Termination (Mar 1995)	MAY 1999
52.242-13	Bankruptcy	JUL 1995

52.242-14	Suspension of Work	APR 1984
52.243-4	Changes	AUG 1987
52.245-2	Government Property (Fixed Price Contracts)	MAY 2004
52.246-12	Inspection of Construction	AUG 1996
52.246-21	Warranty of Construction	MAR 1994
52.248-3	Value Engineering-Construction	FEB 2000
52.249-2 Alt I	Termination for Convenience of the Government (Fixed-Price) (Sep 1996) - Alternate I	SEP 1996
52.249-10	Default (Fixed-Price Construction)	APR 1984
52.249-5000	Basis for Settlement of Proposals	MAY 1999
52.253-1	Computer Generated Forms	JAN 1991
252.201-7000	Contracting Officer's Representative	DEC 1991
252.203-7001	Prohibition On Persons Convicted of Fraud or Other Defense-Contract-Related Felonies	MAR 1999
252.204-7003	Control Of Government Personnel Work Product	APR 1992
252.204-7004 Alt A	Required Central Contractor Registration Alternate A	NOV 2003
252.205-7000	Provision Of Information To Cooperative Agreement Holders	DEC 1991
252.209-7000	Acquisition From Subcontractors Subject To On-Site Inspection Under The Intermediate Range Nuclear Forces (INF) Treaty	NOV 1995
252.209-7004	Subcontracting With Firms That Are Owned or Controlled By The Government of a Terrorist Country	MAR 1998
252.219-7003	Small, Small Disadvantaged and Women-Owned Small Business Subcontracting Plan (DOD Contracts)	APR 1996
252.223-7001	Hazard Warning Labels	DEC 1991
252.223-7004	Drug Free Work Force	SEP 1988
252.223-7006	Prohibition On Storage And Disposal Of Toxic And Hazardous Materials	APR 1993
252.225-7012	Preference For Certain Domestic Commodities	MAY 2004
252.225-7031	Secondary Arab Boycott Of Israel	APR 2003
252.227-7033	Rights in Shop Drawings	APR 1966
252.231-7000	Supplemental Cost Principles	DEC 1991
252.236-7000	Modification Proposals-Price Breakdown	DEC 1991
252.236-7001	Contract Drawings, Maps, and Specifications	AUG 2000
252.236-7002	Obstruction of Navigable Waterways	DEC 1991
252.236-7004	Payment for Mobilization and Demobilization	DEC 1991
252.242-7000	Postaward Conference	DEC 1991
252.243-7001	Pricing Of Contract Modifications	DEC 1991
252.243-7002	Requests for Equitable Adjustment	MAR 1998
252.247-7023	Transportation of Supplies by Sea	MAY 2002
252.247-7024	Notification Of Transportation Of Supplies By Sea	MAR 2000

CLAUSES INCORPORATED BY FULL TEXT

52.202-1 DEFINITIONS (MAY 2001) --ALTERNATE I (MAR 2001)

(a) Agency head or head of the agency means the Secretary (Attorney General, Administrator, Governor, Chairperson, or other chief official, as appropriate) of the agency, unless otherwise indicated, including any deputy or assistant chief official of the executive agency.

(b) Commercial component means any component that is a commercial item.

(c) Component means any item supplied to the Government as part of an end item or of another component, except that for use in 52.225-9, and 52.225-11 see the definitions in 52.225-9(a) and 52.225-11(a).

(d) Contracting Officer means a person with the authority to enter into, administer, and/or terminate contracts and make related determinations and findings. The term includes certain authorized representatives of the Contracting Officer acting within the limits of their authority as delegated by the Contracting Officer.

(e) Nondevelopmental item means--

(1) Any previously developed item of supply used exclusively for governmental purposes by a Federal agency, a State or local government, or a foreign government with which the United States has a mutual defense cooperation agreement;

(2) Any item described in paragraph (f)(1) of this definition that requires only minor modification or modifications of a type customarily available in the commercial marketplace in order to meet the requirements of the procuring department or agency; or

(3) Any item of supply being produced that does not meet the requirements of paragraph (f)(1) or (f)(2) solely because the item is not yet in use.

(f) "Contracting Officer" means a person with the authority to enter into, administer, and/or terminate contracts and make related determinations and findings. The term includes certain authorized representatives of the Contracting Officer acting within the limits of their authority as delegated by the Contracting Officer.

(g) Except as otherwise provided in this contract, the term "subcontracts" includes, but is not limited to, purchase orders and changes and modifications to purchase orders under this contract.

(End of clause)

52.203-2 CERTIFICATE OF INDEPENDENT PRICE DETERMINATION (APR 1985)

(a) The offeror certifies that --

(1) The prices in this offer have been arrived at independently, without, for the purpose of restricting competition, any consultation, communication, or agreement with any other offeror or competitor relating to –

(i) Those prices,

(ii) The intention to submit an offer, or

(iii) The methods of factors used to calculate the prices offered:

(2) The prices in this offer have not been and will not be knowingly disclosed by the offeror, directly or indirectly, to any other offeror or competitor before bid opening (in the case of a sealed bid solicitation) or contract award (in the case of a negotiated solicitation) unless otherwise required by law; and

(3) No attempt has been made or will be made by the offeror to induce any other concern to submit or not to submit an offer for the purpose of restricting competition.

(b) Each signature on the offer is considered to be a certification by the signatory that the signatory --

(1) Is the person in the offeror's organization responsible for determining the prices offered in this bid or proposal, and that the signatory has not participated and will not participate in any action contrary to subparagraphs (a)(1) through (a)(3) of this provision; or

(2) (i) Has been authorized, in writing, to act as agent for the following principals in certifying that those principals have not participated, and will not participate in any action contrary to subparagraphs (a)(1) through (a)(3) of this provison _____ (insert full name of person(s) in the offeror's organization responsible for determining the prices offered in this bid or proposal, and the title of his or her position in the offeror's organization);

(ii) As an authorized agent, does certify that the principals named in subdivision (b)(2)(i) above have not participated, and will not participate, in any action contrary to subparagraphs (a)(1) through (a)(3) above; and

(iii) As an agent, has not personally participated, and will not participate, in any action contrary to subparagraphs (a)(1) through (a)(3) of this provision.

(c) If the offeror deletes or modifies subparagraph (a)(2) of this provision, the offeror must furnish with its offer a signed statement setting forth in detail the circumstances of the disclosure.

(End of clause)

52.203-3 GRATUITIES (APR 1984)

(a) The right of the Contractor to proceed may be terminated by written notice if, after notice and hearing, the agency head or a designee determines that the Contractor, its agent, or another representative--

(1) Offered or gave a gratuity (e.g., an entertainment or gift) to an officer, official, or employee of the Government; and

(2) Intended, by the gratuity, to obtain a contract or favorable treatment under a contract.

(b) The facts supporting this determination may be reviewed by any court having lawful jurisdiction.

(c) If this contract is terminated under paragraph (a) of this clause, the Government is entitled--

(1) To pursue the same remedies as in a breach of the contract; and

(2) In addition to any other damages provided by law, to exemplary damages of not less than 3 nor more than 10 times the cost incurred by the Contractor in giving gratuities to the person concerned, as determined by the agency head or a designee. (This subparagraph (c)(2) is applicable only if this contract uses money appropriated to the

Department of Defense.)

(d) The rights and remedies of the Government provided in this clause shall not be exclusive and are in addition to any other rights and remedies provided by law or under this contract.

(End of clause)

52.203-5 COVENANT AGAINST CONTINGENT FEES (APR 1984)

(a) The Contractor warrants that no person or agency has been employed or retained to solicit or obtain this contract upon an agreement or understanding for a contingent fee, except a bona fide employee or agency. For breach or violation of this warranty, the Government shall have the right to annul this contract without liability or, in its discretion, to deduct from the contract price or consideration, or otherwise recover, the full amount of the contingent fee.

(b) "Bona fide agency," as used in this clause, means an established commercial or selling agency, maintained by a contractor for the purpose of securing business, that neither exerts nor proposes to exert improper influence to solicit or obtain Government contracts nor holds itself out as being able to obtain any Government contract or contracts through improper influence.

"Bona fide employee," as used in this clause, means a person, employed by a contractor and subject to the contractor's supervision and control as to time, place, and manner of performance, who neither exerts nor proposes to exert improper influence to solicit or obtain Government contracts nor holds out as being able to obtain any Government contract or contracts through improper influence.

"Contingent fee," as used in this clause, means any commission, percentage, brokerage, or other fee that is contingent upon the success that a person or concern has in securing a Government contract.

"Improper influence," as used in this clause, means any influence that induces or tends to induce a Government employee or officer to give consideration or to act regarding a Government contract on any basis other than the merits of the matter.

(End of clause)

52.203-6 RESTRICTIONS ON SUBCONTRACTOR SALES TO THE GOVERNMENT (JUL 1995)

(a) Except as provided in (b) of this clause, the Contractor shall not enter into any agreement with an actual or prospective subcontractor, nor otherwise act in any manner, which has or may have the effect of restricting sales by such subcontractors directly to the Government of any item or process (including computer software) made or furnished by the subcontractor under this contract or under any follow-on production contract.

(b) The prohibition in (a) of this clause does not preclude the Contractor from asserting rights that are otherwise authorized by law or regulation.

(c) The Contractor agrees to incorporate the substance of this clause, including this paragraph (c), in all subcontracts under this contract which exceed $100,000.

52.203-7 ANTI-KICKBACK PROCEDURES. (JUL 1995)

(a) Definitions.

"Kickback," as used in this clause, means any money, fee, commission, credit, gift, gratuity, thing of value, or compensation of any kind which is provided, directly or indirectly, to any prime Contractor, prime Contractor employee, subcontractor, or subcontractor employee for the purpose of improperly obtaining or rewarding favorable treatment in connection with a prime contract or in connection with a subcontract relating to a prime contract.

"Person," as used in this clause, means a corporation, partnership, business association of any kind, trust, joint-stock company, or individual.

"Prime contract," as used in this clause, means a contract or contractual action entered into by the United States for the purpose of obtaining supplies, materials, equipment, or services of any kind.

"Prime Contractor," as used in this clause, means a person who has entered into a prime contract with the United States.

"Prime Contractor employee," as used in this clause, means any officer, partner, employee, or agent of a prime Contractor.

"Subcontract," as used in this clause, means a contract or contractual action entered into by a prime Contractor or subcontractor for the purpose of obtaining supplies, materials, equipment, or services of any kind under a prime contract.

"Subcontractor," as used in this clause, (1) means any person, other than the prime Contractor, who offers to furnish or furnishes any supplies, materials, equipment, or services of any kind under a prime contract or a subcontract entered into in connection with such prime contract, and (2) includes any person who offers to furnish or furnishes general supplies to the prime Contractor or a higher tier subcontractor.

"Subcontractor employee," as used in this clause, means any officer, partner, employee, or agent of a subcontractor.

(b) The Anti-Kickback Act of 1986 (41 U.S.C. 51-58) (the Act), prohibits any person from -

(1) Providing or attempting to provide or offering to provide any kickback;

(2) Soliciting, accepting, or attempting to accept any kickback; or

(3) Including, directly or indirectly, the amount of any kickback in the contract price charged by a prime Contractor to the United States or in the contract price charged by a subcontractor to a prime Contractor or higher tier subcontractor.

(c)(1) The Contractor shall have in place and follow reasonable procedures designed to prevent and detect possible violations described in paragraph (b) of this clause in its own operations and direct business relationships.

(2) When the Contractor has reasonable grounds to believe that a violation described in paragraph (b) of this clause may have occurred, the Contractor shall promptly report in writing the possible violation. Such reports shall be made to the inspector general of the contracting agency, the head of the contracting agency if the agency does not have an inspector general, or the Department of Justice.

(3) The Contractor shall cooperate fully with any Federal agency investigating a possible violation described in paragraph (b) of this clause.

(4) The Contracting Officer may (i) offset the amount of the kickback against any monies owed by the United States under the prime contract and/or (ii) direct that the Prime Contractor withhold, from sums owed a subcontractor

under the prime contract, the amount of any kickback. The Contracting Officer may order the monies withheld under subdivision (c)(4)(ii) of this clause be paid over to the Government unless the Government has already offset those monies under subdivision (c)(4)(i) of this clause. In either case, the Prime Contractor shall notify the Contracting Officer when the monies are withheld.

(5) The Contractor agrees to incorporate the substance of this clause, including this subparagraph (c)(5) but excepting subparagraph (c)(1), in all subcontracts under this contract which exceed $100,000.

52.203-8 CANCELLATION, RESCISSION, AND RECOVERY OF FUNDS FOR ILLEGAL OR IMPROPER ACTIVITY (JAN 1997)

(a) If the Government receives information that a contractor or a person has engaged in conduct constituting a violation of subsection (a), (b), (c), or (d) of Section 27 of the Office of Federal Procurement Policy Act (41 U.S.C. 423) (the Act), as amended by section 4304 of the 1996 National Defense Authorization Act for Fiscal Year 1996 (Pub. L. 104-106), the Government may--

(1) Cancel the solicitation, if the contract has not yet been awarded or issued; or

(2) Rescind the contract with respect to which--

(i) The Contractor or someone acting for the Contractor has been convicted for an offense where the conduct constitutes a violation of subsection 27(a) or (b) of the Act for the purpose of either--

(A) Exchanging the information covered by such subsections for anything of value; or

(B) Obtaining or giving anyone a competitive advantage in the award of a Federal agency procurement contract; or

(ii) The head of the contracting activity has determined, based upon a preponderance of the evidence, that the Contractor or someone acting for the Contractor has engaged in conduct constituting an offense punishable under subsections 27(e)(1) of the Act.

(b) If the Government rescinds the contract under paragraph (a) of this clause, the Government is entitled to recover, in addition to any penalty prescribed by law, the amount expended under the contract.

(c) The rights and remedies of the Government specified herein are not exclusive, and are in addition to any other rights and remedies provided by law, regulation, or under this contract.

(End of clause)

52.203-10 PRICE OR FEE ADJUSTMENT FOR ILLEGAL OR IMPROPER ACTIVITY (JAN 1997)

(a) The Government, at its election, may reduce the price of a fixed-price type contract and the total cost and fee under a cost-type contract by the amount of profit or fee determined as set forth in paragraph (b) of this clause if the head of the contracting activity or designee determines that there was a violation of subsection 27 (a), (b), or (c) of the Office of Federal Procurement Policy Act, as amended (41 U.S.C. 423), as implemented in section 3.104 of the Federal Acquisition Regulation.

(b) The price or fee reduction referred to in paragraph (a) of this clause shall be--

(1) For cost-plus-fixed-fee contracts, the amount of the fee specified in the contract at the time of award;

(2) For cost-plus-incentive-fee contracts, the target fee specified in the contract at the time of award, notwithstanding any minimum fee or "fee floor" specified in the contract;

(3) For cost-plus-award-fee contracts--

(i) The base fee established in the contract at the time of contract award;

(ii) If no base fee is specified in the contract, 30 percent of the amount of each award fee otherwise payable to the Contractor for each award fee evaluation period or at each award fee determination point.

(4) For fixed-price-incentive contracts, the Government may--

(i) Reduce the contract target price and contract target profit both by an amount equal to the initial target profit specified in the contract at the time of contract award; or

(ii) If an immediate adjustment to the contract target price and contract target profit would have a significant adverse impact on the incentive price revision relationship under the contract, or adversely affect the contract financing provisions, the Contracting Officer may defer such adjustment until establishment of the total final price of the contract. The total final price established in accordance with the incentive price revision provisions of the contract shall be reduced by an amount equal to the initial target profit specified in the contract at the time of contract award and such reduced price shall be the total final contract price.

(5) For firm-fixed-price contracts, by 10 percent of the initial contract price or a profit amount determined by the Contracting Officer from records or documents in existence prior to the date of the contract award.

(c) The Government may, at its election, reduce a prime contractor's price or fee in accordance with the procedures of paragraph (b) of this clause for violations of the Act by its subcontractors by an amount not to exceed the amount of profit or fee reflected in the subcontract at the time the subcontract was first definitively priced.

(d) In addition to the remedies in paragraphs (a) and (c) of this clause, the Government may terminate this contract for default. The rights and remedies of the Government specified herein are not exclusive, and are in addition to any other rights and remedies provided by law or under this contract.

(End of clause)

52.203-12 LIMITATION ON PAYMENTS TO INFLUENCE CERTAIN FEDERAL TRANSACTIONS (JUN 2003)

(a) Definitions.

"Agency," as used in this clause, means executive agency as defined in 2.101.

"Covered Federal action," as used in this clause, means any of the following Federal actions:

(1) The awarding of any Federal contract.

(2) The making of any Federal grant.

(3) The making of any Federal loan.

(4) The entering into of any cooperative agreement.

(5) The extension, continuation, renewal, amendment, or modification of any Federal contract, grant, loan, or cooperative agreement.

"Indian tribe" and "tribal organization," as used in this clause, have the meaning provided in section 4 of the Indian Self-Determination and Education Assistance Act (25 U.S.C. 450B) and include Alaskan Natives.

"Influencing or attempting to influence," as used in this clause, means making, with the intent to influence, any communication to or appearance before an officer or employee of any agency, a Member of Congress, an officer or employee of Congress, or an employee of a Member of Congress in connection with any covered Federal action.

"Local government," as used in this clause, means a unit of government in a State and, if chartered, established, or otherwise recognized by a State for the performance of a governmental duty, including a local public authority, a special district, an intrastate district, a council of governments, a sponsor group representative organization, and any other instrumentality of a local government.

"Officer or employee of an agency," as used in this clause, includes the following individuals who are employed by an agency:

(1) An individual who is appointed to a position in the Government under Title 5, United States Code, including a position under a temporary appointment.

(2) A member of the uniformed services, as defined in subsection 101(3),Title 37, United States Code.

(3) A special Government employee, as defined in section 202, Title 18, United States Code.

(4) An individual who is a member of a Federal advisory committee, as defined by the Federal Advisory Committee Act, Title 5, United States Code, appendix 2.

"Person," as used in this clause, means an individual, corporation, company, association, authority, firm, partnership, society, State, and local government, regardless of whether such entity is operated for profit, or not for profit. This term excludes an Indian tribe, tribal organization, or any other Indian organization with respect to expenditures specifically permitted by other Federal law.

"Reasonable compensation," as used in this clause, means, with respect to a regularly employed officer or employee of any person, compensation that is consistent with the normal compensation for such officer or employee for work that is not furnished to, not funded by, or not furnished in cooperation with the Federal Government.

"Reasonable payment," as used in this clause, means, with respect to professional and other technical services, a payment in an amount that is consistent with the amount normally paid for such services in the private sector.

"Recipient," as used in this clause, includes the Contractor and all subcontractors. This term excludes an Indian tribe, tribal organization, or any other Indian organization with respect to expenditures specifically permitted by other Federal law.

"Regularly employed," as used in this clause, means, with respect to an officer or employee of a person requesting or receiving a Federal contract, an officer or employee who is employed by such person for at least 130 working days within 1 year immediately preceding the date of the submission that initiates agency consideration of such person for receipt of such contract. An officer or employee who is employed by such person for less than 130 working days within 1 year immediately preceding the date of the submission that initiates agency consideration of such person shall be considered to be regularly employed as soon as he or she is employed by such person for 130 working days.

State, as used in this clause, means a State of the United States, the District of Columbia, or an outlying area of the United States, an agency or instrumentality of a State, and multi-State, regional, or interstate entity having governmental duties and powers.

(b) Prohibitions.

(1) Section 1352 of Title 31, United States Code, among other things, prohibits a recipient of a Federal contract, grant, loan, or cooperative agreement from using appropriated funds to pay any person for influencing or attempting to influence an officer or employee of any agency, a Member of Congress, an officer or employee of Congress, or an employee of a Member of Congress in connection with any of the following covered Federal actions: the awarding of any Federal contract; the making of any Federal grant; the making of any Federal loan; the entering into of any cooperative agreement; or the modification of any Federal contract, grant, loan, or cooperative agreement.

(2) The Act also requires Contractors to furnish a disclosure if any funds other than Federal appropriated funds (including profit or fee received under a covered Federal transaction) have been paid, or will be paid, to any person for influencing or attempting to influence an officer or employee of any agency, a Member of Congress, an officer or employee of Congress, or an employee of a Member of Congress in connection with a Federal contract, grant, loan, or cooperative agreement.

(3) The prohibitions of the Act do not apply under the following conditions:

(i) Agency and legislative liaison by own employees.

(A) The prohibition on the use of appropriated funds, in subparagraph (b)(1) of this clause, does not apply in the case of a payment of reasonable compensation made to an officer or employee of a person requesting or receiving a covered Federal action if the payment is for agency and legislative liaison activities not directly related to a covered Federal action.

(B) For purposes of subdivision (b)(3)(i)(A) of this clause, providing any information specifically requested by an agency or Congress is permitted at any time.

(C) The following agency and legislative liaison activities are permitted at any time where they are not related to a specific solicitation for any covered Federal action:

(1) Discussing with an agency the qualities and characteristics (including individual demonstrations) of the person's products or services, conditions or terms of sale, and service capabilities.

(2) Technical discussions and other activities regarding the application or adaptation of the person's products or services for an agency's use.

(D) The following agency and legislative liaison activities are permitted where they are prior to formal solicitation of any covered Federal action--

(1) Providing any information not specifically requested but necessary for an agency to make an informed decision about initiation of a covered Federal action;

(2) Technical discussions regarding the preparation of an unsolicited proposal prior to its official submission; and

(3) Capability presentations by persons seeking awards from an agency pursuant to the provisions of the Small Business Act, as amended by Pub. L. 95-507, and subsequent amendments.

(E) Only those services expressly authorized by subdivision (b)(3)(i)(A) of this clause are permitted under this clause.

(ii) Professional and technical services.

(A) The prohibition on the use of appropriated funds, in subparagraph (b)(1) of this clause, does not apply in the case of--

(1) A payment of reasonable compensation made to an officer or employee of a person requesting or receiving a covered Federal action or an extension, continuation, renewal, amendment, or modification of a covered Federal action, if payment is for professional or technical services rendered directly in the preparation, submission, or negotiation of any bid, proposal, or application for that Federal action or for meeting requirements imposed by or pursuant to law as a condition for receiving that Federal action.

(2) Any reasonable payment to a person, other than an officer or employee of a person requesting or receiving a covered Federal action or an extension, continuation, renewal, amendment, or modification of a covered Federal action if the payment is for professional or technical services rendered directly in the preparation, submission, or negotiation of any bid, proposal, or application for that Federal action or for meeting requirements imposed by or pursuant to law as a condition for receiving that Federal action. Persons other than officers or employees of a person requesting or receiving a covered Federal action include consultants and trade associations.

(B) For purposes of subdivision (b)(3)(ii)(A) of this clause, "professional and technical services" shall be limited to advice and analysis directly applying any professional or technical discipline. For example, drafting of a legal document accompanying a bid or proposal by a lawyer is allowable. Similarly, technical advice provided by an engineer on the performance or operational capability of a piece of equipment rendered directly in the negotiation of a contract is allowable. However, communications with the intent to influence made by a professional (such as a licensed lawyer) or a technical person (such as a licensed accountant) are not allowable under this section unless they provide advice and analysis directly applying their professional or technical expertise and unless the advice or analysis is rendered directly and solely in the preparation, submission or negotiation of a covered Federal action. Thus, for example, communications with the intent to influence made by a lawyer that do not provide legal advice or analysis directly and solely related to the legal aspects of his or her client's proposal, but generally advocate one proposal over another are not allowable under this section because the lawyer is not providing professional legal services. Similarly, communications with the intent to influence made by an engineer providing an engineering analysis prior to the preparation or submission of a bid or proposal are not allowable under this section since the engineer is providing technical services but not directly in the preparation, submission or negotiation of a covered Federal action.

(C) Requirements imposed by or pursuant to law as a condition for receiving a covered Federal award include those required by law or regulation and any other requirements in the actual award documents.

(D) Only those services expressly authorized by subdivisions (b)(3)(ii)(A)(1) and (2) of this clause are permitted under this clause.

(E) The reporting requirements of FAR 3.803(a) shall not apply with respect to payments of reasonable compensation made to regularly employed officers or employees of a person.

(c) Disclosure.

(1) The Contractor who requests or receives from an agency a Federal contract shall file with that agency a disclosure form, OMB standard form LLL, Disclosure of Lobbying Activities, if such person has made or has agreed to make any payment using nonappropriated funds (to include profits from any covered Federal action), which would be prohibited under subparagraph (b)(1) of this clause, if paid for with appropriated funds.

(2) The Contractor shall file a disclosure form at the end of each calendar quarter in which there occurs any event that materially affects the accuracy of the information contained in any disclosure form previously filed by such person under subparagraph (c)(1) of this clause. An event that materially affects the accuracy of the information reported includes--

(i) A cumulative increase of $25,000 or more in the amount paid or expected to be paid for influencing or attempting to influence a covered Federal action; or

(ii) A change in the person(s) or individual(s) influencing or attempting to influence a covered Federal action; or

(iii) A change in the officer(s), employee(s), or Member(s) contacted to influence or attempt to influence a covered Federal action.

(3) The Contractor shall require the submittal of a certification, and if required, a disclosure form by any person who requests or receives any subcontract exceeding $100,000 under the Federal contract.

(4) All subcontractor disclosure forms (but not certifications) shall be forwarded from tier to tier until received by the prime Contractor. The prime Contractor shall submit all disclosures to the Contracting Officer at the end of the calendar quarter in which the disclosure form is submitted by the subcontractor. Each subcontractor certification shall be retained in the subcontract file of the awarding Contractor.

(d) Agreement. The Contractor agrees not to make any payment prohibited by this clause.

(e) Penalties.

(1) Any person who makes an expenditure prohibited under paragraph (a) of this clause or who fails to file or amend the disclosure form to be filed or amended by paragraph (b) of this clause shall be subject to civil penalties as provided for by 31 U.S.C. 1352. An imposition of a civil penalty does not prevent the Government from seeking any other remedy that may be applicable.

(2) Contractors may rely without liability on the representation made by their subcontractors in the certification and disclosure form.

(f) Cost allowability. Nothing in this clause makes allowable or reasonable any costs which would otherwise be unallowable or unreasonable. Conversely, costs made specifically unallowable by the requirements in this clause will not be made allowable under any other provision.

(End of clause)

52.204-4 PRINTED OR COPIED DOUBLE-SIDED ON RECYCLED PAPER (AUG 2000)

(a) Definitions. As used in this clause--

“Postconsumer material” means a material or finished product that has served its intended use and has been discarded for disposal or recovery, having completed its life as a consumer item. Postconsumer material is a part of the broader category of “recovered material.” For paper and paper products, postconsumer material means “postconsumer fiber” defined by the U.S. Environmental Protection Agency (EPA) as--

(1) Paper, paperboard, and fibrous materials from retail stores, office buildings, homes, and so forth, after they have passed through their end-usage as a consumer item, including: used corrugated boxes; old newspapers; old magazines; mixed waste paper; tabulating cards; and used cordage; or

(2) All paper, paperboard, and fibrous materials that enter and are collected from municipal solid waste; but not

(3) Fiber derived from printers' over-runs, converters' scrap, and over-issue publications.

“Printed or copied double-sided” means printing or reproducing a document so that information is on both sides of a sheet of paper.

“Recovered material,” for paper and paper products, is defined by EPA in its Comprehensive Procurement Guideline as “recovered fiber” and means the following materials:

(1) Postconsumer fiber; and

(2) Manufacturing wastes such as--

(i) Dry paper and paperboard waste generated after completion of the papermaking process (that is, those manufacturing operations up to and including the cutting and trimming of the paper machine reel into smaller rolls or rough sheets) including: envelope cuttings, bindery trimmings, and other paper and paperboard waste resulting from printing, cutting, forming, and other converting operations; bag, box, and carton manufacturing wastes; and butt rolls, mill wrappers, and rejected unused stock; and

(ii) Repulped finished paper and paperboard from obsolete inventories of paper and paperboard manufacturers, merchants, wholesalers, dealers, printers, converters, or others.

(b) In accordance with Section 101 of Executive Order 13101 of September 14, 1998, Greening the Government through Waste Prevention, Recycling, and Federal Acquisition, the Contractor is encouraged to submit paper documents, such as offers, letters, or reports, that are printed or copied double-sided on recycled paper that meet minimum content standards specified in Section 505 of Executive Order 13101, when not using electronic commerce methods to submit information or data to the Government.

(c) If the Contractor cannot purchase high-speed copier paper, offset paper, forms bond, computer printout paper, carbonless paper, file folders, white wove envelopes, writing and office paper, book paper, cotton fiber paper, and cover stock meeting the 30 percent postconsumer material standard for use in submitting paper documents to the Government, it should use paper containing no less than 20 percent postconsumer material. This lesser standard should be used only when paper meeting the 30 percent postconsumer material standard is not obtainable at a reasonable price or does not meet reasonable performance standards.

(End of clause)

52.204-7 CENTRAL CONTRACTOR REGISTRATION (OCT 2003)

(a) Definitions. As used in this clause--

Central Contractor Registration (CCR) database means the primary Government repository for Contractor information required for the conduct of business with the Government.

Data Universal Numbering System (DUNS) number means the 9-digit number assigned by Dun and Bradstreet, Inc. (D&B) to identify unique business entities.

Data Universal Numbering System +4 (DUNS+4) number means the DUNS number assigned by D&B plus a 4-character suffix that may be assigned by a business concern. (D&B has no affiliation with this 4-character suffix.) This 4-character suffix may be assigned at the discretion of the business concern to establish additional CCR records for identifying alternative Electronic Funds Transfer (EFT) accounts (see the FAR at Subpart 32.11) for the same parent concern.

Registered in the CCR database means that--

(1) The Contractor has entered all mandatory information, including the DUNS number or the DUNS+4 number, into the CCR database; and

(2) The Government has validated all mandatory data fields and has marked the record “Active”.

(b)(1) By submission of an offer, the offeror acknowledges the requirement that a prospective awardee shall be registered in the CCR database prior to award, during performance, and through final payment of any contract, basic agreement, basic ordering agreement, or blanket purchasing agreement resulting from this solicitation.

(2) The offeror shall enter, in the block with its name and address on the cover page of its offer, the annotation “DUNS” or “DUNS +4” followed by the DUNS or DUNS +4 number that identifies the offeror's name and address exactly as stated in the offer. The DUNS number will be used by the Contracting Officer to verify that the offeror is registered in the CCR database.

(c) If the offeror does not have a DUNS number, it should contact Dun and Bradstreet directly to obtain one.

(1) An offeror may obtain a DUNS number--

(i) If located within the United States, by calling Dun and Bradstreet at 1-866-705-5711 or via the Internet at http://www.dnb.com; or

(ii) If located outside the United States, by contacting the local Dun and Bradstreet office.

(2) The offeror should be prepared to provide the following information:

(i) Company legal business.

(ii) Tradestyle, doing business, or other name by which your entity is commonly recognized.

(iii) Company Physical Street Address, City, State, and Zip Code.

(iv) Company Mailing Address, City, State and Zip Code (if separate from physical).

(v) Company Telephone Number.

(vi) Date the company was started.

(vii) Number of employees at your location.

(viii) Chief executive officer/key manager.

(ix) Line of business (industry).

(x) Company Headquarters name and address (reporting relationship within your entity).

(d) If the Offeror does not become registered in the CCR database in the time prescribed by the Contracting Officer, the Contracting Officer will proceed to award to the next otherwise successful registered Offeror.

(e) Processing time, which normally takes 48 hours, should be taken into consideration when registering. Offerors who are not registered should consider applying for registration immediately upon receipt of this solicitation.

(f) The Contractor is responsible for the accuracy and completeness of the data within the CCR database, and for any liability resulting from the Government's reliance on inaccurate or incomplete data. To remain registered in the CCR database after the initial registration, the Contractor is required to review and update on an annual basis from

the date of initial registration or subsequent updates its information in the CCR database to ensure it is current, accurate and complete. Updating information in the CCR does not alter the terms and conditions of this contract and is not a substitute for a properly executed contractual document.

(g)(1)(i) If a Contractor has legally changed its business name, “doing business as” name, or division name (whichever is shown on the contract), or has transferred the assets used in performing the contract, but has not completed the necessary requirements regarding novation and change-of-name agreements in Subpart 42.12, the Contractor shall provide the responsible Contracting Officer a minimum of one business day's written notification of its intention to (A) change the name in the CCR database; (B) comply with the requirements of Subpart 42.12 of the FAR; and (C) agree in writing to the timeline and procedures specified by the responsible Contracting Officer. The Contractor must provide with the notification sufficient documentation to support the legally changed name.

(ii) If the Contractor fails to comply with the requirements of paragraph (g)(1)(i) of this clause, or fails to perform the agreement at paragraph (g)(1)(i)(C) of this clause, and, in the absence of a properly executed novation or change-of-name agreement, the CCR information that shows the Contractor to be other than the Contractor indicated in the contract will be considered to be incorrect information within the meaning of the “Suspension of Payment” paragraph of the electronic funds transfer (EFT) clause of this contract.

(2) The Contractor shall not change the name or address for EFT payments or manual payments, as appropriate, in the CCR record to reflect an assignee for the purpose of assignment of claims (see FAR Subpart 32.8, Assignment of Claims). Assignees shall be separately registered in the CCR database. Information provided to the Contractor's CCR record that indicates payments, including those made by EFT, to an ultimate recipient other than that Contractor will be considered to be incorrect information within the meaning of the “Suspension of payment” paragraph of the EFT clause of this contract.

(h) Offerors and Contractors may obtain information on registration and annual confirmation requirements via the internet at http://www.ccr.gov or by calling 1-888-227-2423, or 269-961-5757.

(End of clause)

52.209-6 PROTECTING THE GOVERNMENT'S INTEREST WHEN SUBCONTRACTING WITH CONTRACTORS DEBARRED, SUSPENDED, OR PROPOSED FOR DEBARMENT (JUL 1995)

(a) The Government suspends or debars Contractors to protect the Government's interests. The Contractor shall not enter into any subcontract in excess of the $25,000 with a Contractor that is debarred, suspended, or proposed for debarment unless there is a compelling reason to do so.

(b) The Contractor shall require each proposed first-tier subcontractor, whose subcontract will exceed $25,000, to disclose to the Contractor, in writing, whether as of the time of award of the subcontract, the subcontractor, or its principles, is or is not debarred, suspended, or proposed for debarment by the Federal Government.

(c) A corporate officer or a designee of the Contractor shall notify the Contracting Officer, in writing, before entering into a subcontract with a party that is debarred, suspended, or proposed for debarment (see FAR 9.404 for information on the List of Parties Excluded from Federal Procurement and Nonprocurement Programs). The notice must include the following:

(1) The name of the subcontractor.

(2) The Contractor's knowledge of the reasons for the subcontractor being on the List of Parties Excluded from Federal Procurement and Nonprocurement Programs.

(3) The compelling reason(s) for doing business with the subcontractor notwithstanding its inclusion on the List of

Parties Excluded from Federal Procurement and Nonprocurement Programs.

(4) The systems and procedures the Contractor has established to ensure that it is fully protecting the Government's interests when dealing with such subcontractor in view of the specific basis for the party's debarment, suspension, or proposed debarment.

(End of clause)

52.211-10 COMMENCEMENT, PROSECUTION, AND COMPLETION OF WORK (APR 1984)

The Contractor shall be required to (a) commence work under this contract within **10** calendar days after the date the Contractor receives the notice to proceed, (b) prosecute the work diligently, and (c) complete the entire work ready for use not later than **180** calendar days after the date of receipt by him of notice to proceed. The time stated for completion shall include final cleanup of the premises.

(End of clause)

52.211-12 LIQUIDATED DAMAGES--CONSTRUCTION (SEP 2000)

(a) If the Contractor fails to complete the work within the time specified in the contract, the Contractor shall pay liquidated damages to the Government in the amount of **$515.00** for each calendar day of delay until the work is completed or accepted.

(b) If the Government terminates the Contractor's right to proceed, liquidated damages will continue to accrue until the work is completed. These liquidated damages are in addition to excess costs of repurchase under the Termination clause.

(End of clause)

52.211-13 TIME EXTENSIONS (SEP 2000)

Time extensions for contract changes will depend upon the extent, if any, by which the changes cause delay in the completion of the various elements of construction. The change order granting the time extension may provide that the contract completion date will be extended only for those specific elements related to the changed work and that the remaining contract completion dates for all other portions of the work will not be altered. The change order also may provide an equitable readjustment of liquidated damages under the new completion schedule.

(End of clause)

52.211-18 VARIATION IN ESTIMATED QUANTITY (APR 1984)

If the quantity of a unit-priced item in this contract is an estimated quantity and the actual quantity of the unit-priced item varies more than 15 percent above or below the estimated quantity, an equitable adjustment in the contract price shall be made upon demand of either party. The equitable adjustment shall be based upon any increase or decrease in costs due solely to the variation above 115 percent or below 85 percent of the estimated quantity. If the

quantity variation is such as to cause an increase in the time necessary for completion, the Contractor may request, in writing, an extension of time, to be received by the Contracting Officer within 10 days from the beginning of the delay, or within such further period as may be granted by the Contracting Officer before the date of final settlement of the contract. Upon the receipt of a written request for an extension, the Contracting Officer shall ascertain the facts and make an adjustment for extending the completion date as, in the judgement of the Contracting Officer, is justified.

52.219-4 NOTICE OF PRICE EVALUATION PREFERENCE FOR HUBZONE SMALL BUSINESS CONCERNS (JAN 1999)

(a) Definition. HUBZone small business concern, as used in this clause, means a small business concern that appears on the List of Qualified HUBZone Small Business Concerns maintained by the Small Business Administration.

(b) Evaluation preference. (1) Offers will be evaluated by adding a factor of 10 percent to the price of all offers, except--

(i) Offers from HUBZone small business concerns that have not waived the evaluation preference;

(ii) Otherwise successful offers from small business concerns;

(iii) Otherwise successful offers of eligible products under the Trade Agreements Act when the dollar threshold for application of the Act is exceeded (see 25.402 of the Federal Acquisition Regulation (FAR)); and

(iv) Otherwise successful offers where application of the factor would be inconsistent with a Memorandum of Understanding or other international agreement with a foreign government.

(2) The factor of 10 percent shall be applied on a line item basis or to any group of items on which award may be made. Other evaluation factors described in the solicitation shall be applied before application of the factor.

(3) A concern that is both a HUBZone small business concern and a small disadvantaged business concern will receive the benefit of both the HUBZone small business price evaluation preference and the small disadvantaged business price evaluation adjustment (see FAR clause 52.219-23). Each applicable price evaluation preference or adjustment shall be calculated independently against an offeror's base offer.

These individual preference amounts shall be added together to arrive at the total evaluated price for that offer.

(c) Waiver of evaluation preference. A HUBZone small business concern may elect to waive the evaluation preference, in which case the factor will be added to its offer for evaluation purposes. The agreements in paragraph (d) of this clause do not apply if the offeror has waived the evaluation preference.

___ Offeror elects to waive the evaluation preference.

(d) Agreement. A HUBZone small business concern agrees that in the performance of the contract, in the case of a contract for

(1) Services (except construction), at least 50 percent of the cost of personnel for contract performance will be spent for employees of the concern or employees of other HUBZone small business concerns;

(2) Supplies (other than procurement from a nonmanufacturer of such supplies), at least 50 percent of the cost of manufacturing, excluding the cost of materials, will be performed by the concern or other HUBZone small business concerns;

(3) General construction, at least 15 percent of the cost of the contract performance incurred for personnel will be will be spent on the concern's employees or the employees of other HUBZone small business concerns; or

(4) Construction by special trade contractors, at least 25 percent of the cost of the contract performance incurred for personnel will be spent on the concern's employees or the employees of other HUBZone small business concerns.

(e) A HUBZone joint venture agrees that in the performance of the contract, the applicable percentage specified in paragraph (d) of this clause will be performed by the HUBZone small business participant or participants.

(f) A HUBZone small business concern nonmanufacturer agrees to furnish in performing this contract only end items manufactured or produced by HUBZone small business manufacturer concerns. This paragraph does not apply in connection with construction or service contracts.

(End of clause)

52.219-8 UTILIZATION OF SMALL BUSINESS CONCERNS (OCT 2000)

(a) It is the policy of the United States that small business concerns, veteran-owned small business concerns, service-disabled veteran-owned small business concerns, HUBZone small business concerns, small disadvantaged business concerns, and women-owned small business concerns shall have the maximum practicable opportunity to participate in performing contracts let by any Federal agency, including contracts and subcontracts for subsystems, assemblies, components, and related services for major systems. It is further the policy of the United States that its prime contractors establish procedures to ensure the timely payment of amounts due pursuant to the terms of their subcontracts with small business concerns, veteran-owned small business concerns, service-disabled veteran-owned small business concerns, HUBZone small business concerns, small disadvantaged business concerns, and women-owned small business concerns.

(b) The Contractor hereby agrees to carry out this policy in the awarding of subcontracts to the fullest extent consistent with efficient contract performance. The Contractor further agrees to cooperate in any studies or surveys as may be conducted by the United States Small Business Administration or the awarding agency of the United States as may be necessary to determine the extent of the Contractor's compliance with this clause.

Definitions. As used in this contract--

HUBZone small business concern means a small business concern that appears on the List of Qualified HUBZone Small Business Concerns maintained by the Small Business Administration.

Service-disabled veteran-owned small business concern--

(1) Means a small business concern--

(i) Not less than 51 percent of which is owned by one or more service-disabled veterans or, in the case of any publicly owned business, not less than 51 percent of the stock of which is owned by one or more service-disabled veterans; and

(ii) The management and daily business operations of which are controlled by one or more service-disabled veterans or, in the case of a veteran with permanent and severe disability, the spouse or permanent caregiver of such veteran.

(2) Service-disabled veteran means a veteran, as defined in 38 U.S.C. 101(2), with a disability that is service-connected, as defined in 38 U.S.C. 101(16).

Small business concern means a small business as defined pursuant to Section 3 of the Small Business Act and relevant regulations promulgated pursuant thereto.

Small disadvantaged business concern means a small business concern that represents, as part of its offer that--

(1) It has received certification as a small disadvantaged business concern consistent with 13 CFR part 124, subpart B;

(2) No material change in disadvantaged ownership and control has occurred since its certification;

(3) Where the concern is owned by one or more individuals, the net worth of each individual upon whom the certification is based does not exceed $750,000 after taking into account the applicable exclusions set forth at 13 CFR 124.104(c)(2); and

(4) It is identified, on the date of its representation, as a certified small disadvantaged business in the database maintained by the Small Business Administration (PRO-Net).

Veteran-owned small business concern means a small business concern--

(1) Not less than 51 percent of which is owned by one or more veterans (as defined at 38 U.S.C. 101(2)) or, in the case of any publicly owned business, not less than 51 percent of the stock of which is owned by one or more veterans; and

(2) The management and daily business operations of which are controlled by one or more veterans.

Women-owned small business concern means a small business concern--

(1) That is at least 51 percent owned by one or more women, or, in the case of any publicly owned business, at least 51 percent of the stock of which is owned by one or more women; and

(2) Whose management and daily business operations are controlled by one or more women.

(d) Contractors acting in good faith may rely on written representations by their subcontractors regarding their status as a small business concern, a veteran-owned small business concern, a service-disabled veteran-owned small business concern, a HUBZone small business concern, a small disadvantaged business concern, or a women-owned small business concern.

(End of clause)

52.219-9 SMALL BUSINESS SUBCONTRACTING PLAN (JAN 2002)--ALTERNATE I (OCT 2001).

(a) This clause does not apply to small business concerns.

(b) Definitions. As used in this clause--

Commercial item means a product or service that satisfies the definition of commercial item in section 2.101 of the Federal Acquisition Regulation.

Commercial plan means a subcontracting plan (including goals) that covers the offeror's fiscal year and that applies to the entire production of commercial items sold by either the entire company or a portion thereof (e.g., division, plant, or product line).

Individual contract plan means a subcontracting plan that covers the entire contract period (including option periods), applies to a specific contract, and has goals that are based on the offeror's planned subcontracting in

support of the specific contract, except that indirect costs incurred for common or joint purposes may be allocated on a prorated basis to the contract.

Master plan means a subcontracting plan that contains all the required elements of an individual contract plan, except goals, and may be incorporated into individual contract plans, provided the master plan has been approved.

Subcontract means any agreement (other than one involving an employer-employee relationship) entered into by a Federal Government prime Contractor or subcontractor calling for supplies or services required for performance of the contract or subcontract.

(c) The apparent low bidder, upon request by the Contracting Officer, shall submit a subcontracting plan, where applicable, that separately addresses subcontracting with small business, veteran-owner small business, HUBZone small business, small disadvantaged business, and women-owned small business concerns. If the bidder is submitting an individual contract plan, the plan must separately address subcontracting with small business, HUBZone small business, small disadvantaged business, and women-owned small business concerns, with a separate part for the basic contract and separate parts for each option (if any). The plan shall be included in and made a part of the resultant contract. The subcontracting plan shall be submitted within the time specified by the Contracting Officer. Failure to submit the subcontracting plan shall make the bidder ineligible for the award of a contract.

(d) The offeror's subcontracting plan shall include the following:

(1) Goals, expressed in terms of percentages of total planned subcontracting dollars, for the use of small business, veteran-owned small business, HUBZone small business, small disadvantaged business, and women-owned small business concerns as subcontractors. The offeror shall include all subcontracts that contribute to contract performance, and may include a proportionate share of products and services that are normally allocated as indirect costs.

(2) A statement of--

(i) Total dollars planned to be subcontracted for an individual contract plan; or the offeror's total projected sales, expressed in dollars, and the total value of projected subcontracts to support the sales for a commercial plan;

(ii) Total dollars planned to be subcontracted to small business concerns;

(iii) Total dollars planned to be subcontracted to veteran-owned small business concerns;

(iv) Total dollars planned to be subcontracted to HUBZone small business concerns;

(v) Total dollars planned to be subcontracted to small disadvantaged business concerns; and

(vi) Total dollars planned to be subcontracted to women-owned small business concerns.

(3) A description of the principal types of supplies and services to be subcontracted, and an identification of the types planned for subcontracting to--

(i) Small business concerns;

(ii) Veteran-owned small business concerns;

(iii) HUBZone small business concerns;

(iv) Small disadvantaged business concerns; and

(v) Women-owned small business concerns.

(4) A description of the method used to develop the subcontracting goals in paragraph (d)(1) of this clause.

(5) A description of the method used to identify potential sources for solicitation purposes (e.g., existing company source lists, the Procurement Marketing and Access Network (PRO-Net) of the Small Business Administration (SBA), veterans service organizations, the National Minority Purchasing Council Vendor Information Service, the Research and Information Division of the Minority Business Development Agency in the Department of Commerce, or small, HUBZone, small disadvantaged, and women-owned small business trade associations). A firm may rely on the information contained in PRO-Net as an accurate representation of a concern's size and ownership characteristics for the purposes of maintaining a small, veteran-owned small, HUBZone small, small disadvantaged, and women-owned small business source list. Use of PRO-Net as its source list does not relieve a firm of its responsibilities (e.g., outreach, assistance, counseling, or publicizing subcontracting opportunities) in this clause.

(6) A statement as to whether or not the offeror in included indirect costs in establishing subcontracting goals, and a description of the method used to determine the proportionate share of indirect costs to be incurred with—

(i) Small business concerns;

(ii) Veteran-owned small business concerns;

(iii) HUBZone small business concerns;

(iv) Small disadvantaged business concerns; and

(v) Women-owned small business concerns.

(7) The name of the individual employed by the offeror who will administer the offeror's subcontracting program, and a description of the duties of the individual.

(8) A description of the efforts the offeror will make to assure that small business, veteran-owned small business, HUBZone small business, small disadvantaged business and women-owned small business concerns have an equitable opportunity to compete for subcontracts.

(9) Assurances that the offeror will include the clause of this contract entitled ``Utilization of Small Business Concerns'' in all subcontracts that offer further subcontracting opportunities, and that the offeror will require all subcontractors (except small business concerns) that receive subcontracts in excess of $500,000 ($1,000,000 for construction of any public facility) to adopt a subcontracting plan that complies with the requirements of this clause.

(10) Assurances that the offeror will--

(i) Cooperate in any studies or surveys as may be required;

(ii) Submit periodic reports so that the Government can determine the extent of compliance by the offeror with the subcontracting plan;

(iii) Submit Standard Form (SF) 294, Subcontracting Report for Individual Contracts, and/or SF 295, Summary Subcontract Report, in accordance with paragraph (j) of this clause. The reports shall provide information on subcontract awards to small business concerns, veteran-owned small business concerns, service-disabled veteran-owned small business concerns, small disadvantaged business concerns, women-owned small business concerns, and Historically Black Colleges and Universities and Minority Institutions. Reporting shall be in accordance with the instructions on the forms or as provided in agency regulations.

(iv) Ensure that its subcontractors agree to submit SF 294 and SF 295.

(11) A description of the types of records that will be maintained concerning procedures that have been adopted to comply with the requirements and goals in the plan, including establishing source lists; and a description of the offeror's efforts to locate small business, veteran-owned small business, HUBZone small business, small disadvantaged business, and women-owned small business concerns and award subcontracts to them. The records shall include at least the following (on a plant-wide or company-wide basis, unless otherwise indicated)

(i) Source lists (e.g., PRO-Net), guides, and other data that identify small business, veteran-owner small business, HUBZone small business, small disadvantaged business, and women-owned small business concerns.

(ii) Organizations contacted in an attempt to locate sources that are small business, veteran-owned small business, HUBZone small business, small disadvantaged business, or women-owned small business concerns.

(iii) Records on each subcontract solicitation resulting in an award of more than $100,000, indicating--

(A) Whether small business concerns were solicited and, if not, why not;

(B) Whether veteran-owned small business concerns were solicited and, if not, why not;

(C) Whether HUBZone small business concerns were solicited and, if not, why not;

(D) Whether small disadvantaged business concerns were solicited and, if not, why not;

(E) Whether women-owned small business concerns were solicited and, if not, why not; and

(F) If applicable, the reason award was not made to a small business concern.

(iv) Records of any outreach efforts to contact--

(A) Trade associations;

(B) Business development organizations;

(C) Conferences and trade fairs to locate small, HUBZone small, small disadvantaged, and women-owned small business sources; and

(D) Veterans service organizations.

(v) Records of internal guidance and encouragement provided to buyers through--

(A) Workshops, seminars, training, etc.; and

(B) Monitoring performance to evaluate compliance with the program's requirements.

(vi) On a contract-by-contract basis, records to support award data submitted by the offeror to the Government, including the name, address, and business size of each subcontractor. Contractors having commercial plans need not comply with this requirement.

(e) In order to effectively implement this plan to the extent consistent with efficient contract performance, the Contractor shall perform the following functions:

(1) Assist small business, veteran-owner small business, HUBZone small business, small disadvantaged business, and women-owned small business concerns by arranging solicitations, time for the preparation of bids, quantities, specifications, and delivery schedules so as to facilitate the participation by such concerns. Where the Contractor's

lists of potential small business, veteran-owner small business, HUBZone small business, small disadvantaged business, and women-owned small business subcontractors are excessively long, reasonable effort shall be made to give all such small business concerns an opportunity to compete over a period of time.

(2) Provide adequate and timely consideration of the potentialities of small business, veteran-owner small business, HUBZone small business, small disadvantaged business, and women-owned small business concerns in all ``make-or-buy'' decisions.

(3) Counsel and discuss subcontracting opportunities with representatives of small business, veteran-owner small business, HUBZone small business, small disadvantaged business, and women-owned small business firms.

(4) Provide notice to subcontractors concerning penalties and remedies for misrepresentations of business status as small, veteran-owner small business, HUBZone small, small disadvantaged, or women-owned small business for the purpose of obtaining a subcontract that is to be included as part or all of a goal contained in the Contractor's subcontracting plan.

(f) A master plan on a plant or division-wide basis that contains all the elements required by paragraph (d) of this clause, except goals, may be incorporated by reference as a part of the subcontracting plan required of the offeror by this clause; provided--
(1) the master plan has been approved, (2) the offeror ensures that the master plan is updated as necessary and provides copies of the approved master plan, including evidence of its approval, to the Contracting Officer, and (3) goals and any deviations from the master plan deemed necessary by the Contracting Officer to satisfy the requirements of this contract are set forth in the individual subcontracting plan.

(g) A commercial plan is the preferred type of subcontracting plan for contractors furnishing commercial items. The commercial plan shall relate to the offeror's planned subcontracting generally, for both commercial and Government business, rather than solely to the Government contract. Commercial plans are also preferred for subcontractors that provide commercial items under a prime contract, whether or not the prime contractor is supplying a commercial item.

(h) Prior compliance of the offeror with other such subcontracting plans under previous contracts will be considered by the Contracting Officer in determining the responsibility of the offeror for award of the contract.

(i) The failure of the Contractor or subcontractor to comply in good faith with (1) the clause of this contract entitled "Utilization Of Small Business Concerns," or (2) an approved plan required by this clause, shall be a material breach of the contract.

(j) The Contractor shall submit the following reports:

(1) Standard Form 294, Subcontracting Report for Individual Contracts. This report shall be submitted to the Contracting Officer semiannually and at contract completion. The report covers subcontract award data related to this contract. This report is not required for commercial plans.

(2) Standard Form 295, Summary Subcontract Report. This report encompasses all of the contracts with the awarding agency. It must be submitted semi-annually for contracts with the Department of Defense and annually for contracts with civilian agencies. If the reporting activity is covered by a commercial plan, the reporting activity must report annually all subcontract awards under that plan. All reports submitted at the close of each fiscal year (both individual and commercial plans) shall include a breakout, in the Contractor's format, of subcontract awards, in whole dollars, to small disadvantaged business concerns by North American Industry Classification System (NAICS) Industry Subsector. For a commercial plan, the Contractor may obtain from each of its subcontractors a predominant NAICS Industry Subsector and report all awards to that subcontractor under its predominant NAICS Industry Subsector.

(End of clause)

52.219-14 LIMITATIONS ON SUBCONTRACTING (DEC 1996)

(a) This clause does not apply to the unrestricted portion of a partial set-aside.

(b) By submission of an offer and execution of a contract, the Offeror/Contractor agrees that in performance of the contract in the case of a contract for--

(1) Services (except construction). At least 50 percent of the cost of contract performance incurred for personnel shall be expended for employees of the concern.

(2) Supplies (other than procurement from a nonmanufacturer of such supplies). The concern shall perform work for at least 50 percent of the cost of manufacturing the supplies, not including the cost of materials.

(3) General construction. The concern will perform at least 15 percent of the cost of the contract, not including the cost of materials, with its own employees.

(4) Construction by special trade contractors. The concern will perform at least 25 percent of the cost of the contract, not including the cost of materials, with its own employees.

52.219-16 LIQUIDATED DAMAGES-SUBCONTRACTING PLAN (JAN 1999)

(a) Failure to make a good faith effort to comply with the subcontracting plan, as used in this clause, means a willful or intentional failure to perform in accordance with the requirements of the subcontracting plan approved under the clause in this contract entitled "Small Business Subcontracting Plan," or willful or intentional action to frustrate the plan.

(b) Performance shall be measured by applying the percentage goals to the total actual subcontracting dollars or, if a commercial plan is involved, to the pro rata share of actual subcontracting dollars attributable to Government contracts covered by the commercial plan. If, at contract completion or, in the case of a commercial plan, at the close of the fiscal year for which the plan is applicable, the Contractor has failed to meet its subcontracting goals and the Contracting Officer decides in accordance with paragraph (c) of this clause that the Contractor failed to make a good faith effort to comply with its subcontracting plan, established in accordance with the clause in this contract entitled “Small Business Subcontracting Plan,” the Contractor shall pay the Government liquidated damages in an amount stated. The amount of probable damages attributable to the Contractor's failure to comply shall be an amount equal to the actual dollar amount by which the Contractor failed to achieve each subcontract goal.

(c) Before the Contracting Officer makes a final decision that the Contractor has failed to make such good faith effort, the Contracting Officer shall give the Contractor written notice specifying the failure and permitting the Contractor to demonstrate what good faith efforts have been made and to discuss the matter. Failure to respond to the notice may be taken as an admission that no valid explanation exists. If, after consideration of all the pertinent data, the Contracting Officer finds that the Contractor failed to make a good faith effort to comply with the subcontracting plan, the Contracting Officer shall issue a final decision to that effect and require that the Contractor pay the Government liquidated damages as provided in paragraph (b) of this clause.

(d) With respect to commercial plans, the Contracting Officer who approved the plan will perform the functions of the Contracting Officer under this clause on behalf of all agencies with contracts covered by the commercial plan.

(e) The Contractor shall have the right of appeal, under the clause in this contract entitled Disputes, from any final decision of the Contracting Officer.

(f) Liquidated damages shall be in addition to any other remedies that the Government may have.

(End of clause)

52.222-3 CONVICT LABOR (JUN 2003)

(a) Except as provided in paragraph (b) of this clause, the Contractor shall not employ in the performance of this contract any person undergoing a sentence of imprisonment imposed by any court of a State, the District of Columbia, Puerto Rico, the Northern Mariana Islands, American Samoa, Guam, or the U.S. Virgin Islands.

(b) The Contractor is not prohibited from employing persons--

(1) On parole or probation to work at paid employment during the term of their sentence;

(2) Who have been pardoned or who have served their terms; or

(3) Confined for violation of the laws of any of the States, the District of Columbia, Puerto Rico, the Northern Mariana Islands, American Samoa, Guam, or the U.S. Virgin Islands who are authorized to work at paid employment in the community under the laws of such jurisdiction, if--

(i) The worker is paid or is in an approved work training program on a voluntary basis;

(ii) Representatives of local union central bodies or similar labor union organizations have been consulted;

(iii) Such paid employment will not result in the displacement of employed workers, or be applied in skills, crafts, or trades in which there is a surplus of available gainful labor in the locality, or impair existing contracts for services;

(iv) The rates of pay and other conditions of employment will not be less than those paid or provided for work of a similar nature in the locality in which the work is being performed; and

(v) The Attorney General of the United States has certified that the work-release laws or **regulations** of the jurisdiction involved are in conformity with the requirements of Executive Order 11755, as amended by Executive Orders 12608 and 12943.

(End of clause)

52.222-4 CONTRACT WORK HOURS AND SAFETY STANDARDS ACT - OVERTIME COMPENSATION. (SEP 2000)

(a) Overtime requirements. No Contractor or subcontractor employing laborers or mechanics (see Federal Acquisition Regulation 22.300) shall require or permit them to work over 40 hours in any workweek unless they are paid at least 1 and 1/2 times the basic rate of pay for each hour worked over 40 hours.

(b) Violation; liability for unpaid wages; liquidated damages. The responsible Contractor and subcontractor are liable for unpaid wages if they violate the terms in paragraph (a) of this clause. In addition, the Contractor and subcontractor are liable for liquidated damages payable to the Government. The Contracting Officer will assess liquidated damages at the rate of $10 per affected employee for each calendar day on which the employer required or permitted the employee to work in excess of the standard workweek of 40 hours without paying overtime wages required by the Contract Work Hours and Safety Standards Act.

(c) Withholding for unpaid wages and liquidated damages. The Contracting Officer will withhold from payments due under the contract sufficient funds required to satisfy any Contractor or subcontractor liabilities for unpaid wages and liquidated damages. If amounts withheld under the contract are insufficient to satisfy Contractor or subcontractor liabilities, the Contracting Officer will withhold payments from other Federal or Federally assisted contracts held by the same Contractor that are subject to the Contract Work Hours and Safety Standards Act.

(d) Payrolls and basic records.

(1) The Contractor and its subcontractors shall maintain payrolls and basic payroll records for all laborers and mechanics working on the contract during the contract and shall make them available to the Government until 3 years after contract completion. The records shall contain the name and address of each employee, social security number, labor classifications, hourly rates of wages paid, daily and weekly number of hours worked, deductions made, and actual wages paid. The records need not duplicate those required for construction work by Department of Labor regulations at 29 CFR 5.5(a)(3) implementing the Davis-Bacon Act.

(2) The Contractor and its subcontractors shall allow authorized representatives of the Contracting Officer or the Department of Labor to inspect, copy, or transcribe records maintained under paragraph (d)(1) of this clause. The Contractor or subcontractor also shall allow authorized representatives of the Contracting Officer or Department of Labor to interview employees in the workplace during working hours.

(e) Subcontracts. The Contractor shall insert the provisions set forth in paragraphs (a) through (d) of this clause in subcontracts exceeding $100,000 and require subcontractors to include these provisions in any lower tier subcontracts. The Contractor shall be responsible for compliance by any subcontractor or lower-tier subcontractor with the provisions set forth in paragraphs (a) through (d) of this clause.

(End of clause)

52.222-6 DAVIS-BACON ACT (FEB 1995)

(a) All laborers and mechanics employed or working upon the site of the work will be paid unconditionally and not less often than once a week, and without subsequent deduction or rebate on any account (except such payroll deductions as are permitted by regulations issued by the Secretary of Labor under the Copeland Act (29 CFR Part 3), the full amount of wages and bona fide fringe benefits (or cash equivalents thereof) due at time of payment computed at rates not less than those contained in the wage determination of the Secretary of Labor which is attached hereto and made a part hereof, regardless of any contractual relationship which may be alleged to exist between the Contractor and such laborers and mechanics. Contributions made or costs reasonably anticipated for bona fide fringe benefits under section 1(b)(2) of the Davis-Bacon Act on behalf of laborers or mechanics are considered wages paid to such laborers or mechanics, subject to the provisions of paragraph (d) of this clause; also, regular contributions made or costs incurred for more than a weekly period (but not less often than quarterly) under plans, funds, or programs which cover the particular weekly period, are deemed to be constructively made or incurred during such period. Such laborers and mechanics shall be paid not less than the appropriate wage rate and fringe benefits in the wage determination for the classification of work actually performed, without regard to skill, except as provided in the clause entitled Apprentices and Trainees. Laborers or mechanics performing work in more than one classification may be compensated at the rate specified for each classification for the time actually worked therein; provided, That the employer's payroll records accurately set forth the time spent in each classification in which work is performed. The wage determination (including any additional classifications and wage rates conformed under paragraph (b) of this clause) and the Davis-Bacon poster (WH-1321) shall be posted at all times by the Contractor and its subcontractors at the site of the work in a prominent and accessible place where it can be easily seen by the workers.

(b)(1) The Contracting Officer shall require that any class of laborers or mechanics which is not listed in the wage

determination and which is to be employed under the contract shall be classified in conformance with the wage determination. The Contracting Officer shall approve an additional classification and wage rate and fringe benefits therefor only when all the following criteria have been met:

(i) The work to be performed by the classification requested is not performed by a classification in the wage determination.

(ii) The classification is utilized in the area by the construction industry.

(iii) The proposed wage rate, including any bona fide fringe benefits, bears a reasonable relationship to the wage rates contained in the wage determination.

(2) If the Contractor and the laborers and mechanics to be employed in the classification (if known), or their representatives, and the Contracting Officer agree on the classification and wage rate (including the amount designated for fringe benefits, where appropriate), a report of the action taken shall be sent by the Contracting Officer to the Administrator of the Wage and Hour Division, Employment Standards Administration, U.S. Department of Labor, Washington, DC 20210. The Administrator or an authorized representative will approve, modify, or disapprove every additional classification action within 30 days of receipt and so advise the Contracting Officer or will notify the Contracting Officer within the 30-day period that additional time is necessary.

(3) In the event the Contractor, the laborers or mechanics to be employed in the classification, or their representatives, and the Contracting Officer do not agree on the proposed classification and wage rate (including the amount designated for fringe benefits, where appropriate), the Contracting Officer shall refer the questions, including the views of all interested parties and the recommendation of the Contracting Officer, to the Administrator of the Wage and Hour Division for determination. The Administrator, or an authorized representative, will issue a determination within 30 days of receipt and so advise the Contracting Officer or will notify the Contracting Officer within the 30-day period that additional time is necessary.

(4) The wage rate (including fringe benefits, where appropriate) determined pursuant to subparagraphs (b)(2) and (b)(3) of this clause shall be paid to all workers performing work in the classification under this contract from the first day on which work is performed in the classification.

(c) Whenever the minimum wage rate prescribed in the contract for a class of laborers or mechanics includes a fringe benefit which is not expressed as an hourly rate, the Contractor shall either pay the benefit as stated in the wage determination or shall pay another bona fide fringe benefit or an hourly cash equivalent thereof.

(2) If the Contractor does not make payments to a trustee or other third person, the Contractor may consider as part of the wages of any laborer or mechanic the amount of any costs reasonably anticipated in providing bona fide fringe benefits under a plan or program; provided, That the Secretary of Labor has found, upon the written request of the Contractor, that the applicable standards of the Davis-Bacon Act have been met. The Secretary of Labor may require the Contractor to set aside in a separate account assets for the meeting of obligations under the plan or program.

(End of clause)

52.222-7 WITHHOLDING OF FUNDS (FEB 1988)

The Contracting Officer shall, upon his or her own action or upon written request of an authorized representative of the Department of Labor, withhold or cause to be withheld from the Contractor under this contract or any other Federal contract with the same Prime Contractor, or any other Federally assisted contract subject to Davis-Bacon prevailing wage requirements, which is held by the same Prime Contractor, so much of the accrued payments or advances as may be considered necessary to pay laborers and mechanics, including apprentices, trainees, and

helpers, employed by the Contractor or any subcontractor the full amount of wages required by the contract. In the event of failure to pay any laborer or mechanic, including any apprentice, trainee, or helper, employed or working on the site of the work, all or part of the wages required by the contract, the Contracting Officer may, after written notice to the Contractor, take such action as may be necessary to cause the suspension of any further payment, advance, or guarantee of funds until such violations have ceased.

(End of clause)

52.222-8 PAYROLLS AND BASIC RECORDS (FEB 1988)

(a) Payrolls and basic records relating thereto shall be maintained by the Contractor during the course of the work and preserved for a period of 3 years thereafter for all laborers and mechanics working at the site of the work. Such records shall contain the name, address, and social security number of each such worker, his or her correct classification, hourly rates of wages paid (including rates of contributions or costs anticipated for bona fide fringe benefits or cash equivalents thereof of the types described in section 1(b)(2)(B) of the Davis-Bacon Act), daily and weekly number of hours worked, deductions made, and actual wages paid. Whenever the Secretary of Labor has found, under paragraph (d) of the clause entitled Davis-Bacon Act, that the wages of any laborer or mechanic include the amount of any costs reasonably anticipated in providing benefits under a plan or program described in section 1(b)(2)(B) of the Davis-Bacon Act, the Contractor shall maintain records which show that the commitment to provide such benefits is enforceable, that the plan or program is financially responsible, and that the plan or program has been communicated in writing to the laborers or mechanics affected, and records which show the costs anticipated or the actual cost incurred in providing such benefits. Contractors employing apprentices or trainees under approved programs shall maintain written evidence of the registration of apprenticeship programs and certification of trainee programs, the registration of the apprentices and trainees, and the ratios and wage rates prescribed in the applicable programs.

(b)(1) The Contractor shall submit weekly for each week in which any contract work is performed a copy of all payrolls to the Contracting Officer. The payrolls submitted shall set out accurately and completely all of the information required to be maintained under paragraph (a) of this clause. This information may be submitted in any form desired. Optional Form WH-347 (Federal Stock Number 029-005-00014-1) is available for this purpose and may be purchased from the Superintendent of Documents, U.S. Government Printing Office, Washington, DC 20402. The Prime Contractor is responsible for the submission of copies of payrolls by all subcontractors.

(2) Each payroll submitted shall be accompanied by a "Statement of Compliance," signed by the Contractor or subcontractor or his or her agent who pays or supervises the payment of the persons employed under the contract and shall certify--

(i) That the payroll for the payroll period contains the information required to be maintained under paragraph (a) of this clause and that such information is correct and complete;

(ii) That each laborer or mechanic (including each helper, apprentice, and trainee) employed on the contract during the payroll period has been paid the full weekly wages earned, without rebate, either directly or indirectly, and that no deductions have been made either directly or indirectly from the full wages earned, other than permissible deductions as set forth in the Regulations, 29 CFR Part 3; and

(iii) That each laborer or mechanic has been paid not less than the applicable wage rates and fringe benefits or cash equivalents for the classification of work performed, as specified in the applicable wage determination incorporated into the contract.

(3) The weekly submission of a properly executed certification set forth on the reverse side of Optional Form WH-347 shall satisfy the requirement for submission of the "Statement of Compliance" required by subparagraph (b)(2) of this clause.

(4) The falsification of any of the certifications in this clause may subject the Contractor or subcontractor to civil or criminal prosecution under Section 1001 of Title 18 and Section 3729 of Title 31 of the United States Code.

(c) The Contractor or subcontractor shall make the records required under paragraph (a) of this clause available for inspection, copying, or transcription by the Contracting Officer or authorized representatives of the Contracting Officer or the Department of Labor. The Contractor or subcontractor shall permit the Contracting Officer or representatives of the Contracting Officer or the Department of Labor to interview employees during working hours on the job. If the Contractor or subcontractor fails to submit required records or to make them available, the Contracting Officer may, after written notice to the Contractor, take such action as may be necessary to cause the suspension of any further payment. Furthermore, failure to submit the required records upon request or to make such records available may be grounds for debarment action pursuant to 29 CFR 5.12.

(End of clause)

52.222-9 APPRENTICES AND TRAINEES (FEB 1988)

(a) Apprentices. Apprentices will be permitted to work at less than the predetermined rate for the work they performed when they are employed pursuant to and individually registered in a bona fide apprenticeship program registered with the U.S. Department of Labor, Employment and Training Administration, Bureau of Apprenticeship and Training, or with a State Apprenticeship Agency recognized by the Bureau, or if a person is employed in his or her first 90 days of probationary employment as an apprentice in such an apprenticeship program, who is not individually registered in the program, but who has been certified by the Bureau of Apprenticeship and Training or a State Apprenticeship Agency (where appropriate) to be eligible for probationary employment as an apprentice. The allowable ratio of apprentices to journeymen on the job site in any craft classification shall not be greater than the ratio permitted to the Contractor as to the entire work force under the registered program. Any worker listed on a payroll at an apprentice wage rate, who is not registered or otherwise employed as stated in this paragraph, shall be paid not less than the applicable wage determination for the classification of work actually performed. In addition, any apprentice performing work on the job site in excess of the ratio permitted under the registered program shall be paid not less than the applicable wage rate on the wage determination for the work actually performed. Where a contractor is performing construction on a project in a locality other than that in which its program is registered, the ratios and wage rates (expressed in percentages of the journeyman's hourly rate) specified in the Contractor's or subcontractor's registered program shall be observed. Every apprentice must be paid at not less than the rate specified in the registered program for the apprentice's level of progress, expressed as a percentage of the journeyman hourly rate specified in the applicable wage determination. Apprentices shall be paid fringe benefits in accordance with the provisions of the apprenticeship program. If the apprenticeship program does not specify fringe benefits, apprentices must be paid the full amount of fringe benefits listed on the wage determination for the applicable classification. If the Administrator determines that a different practice prevails for the applicable apprentice classification, fringes shall be paid in accordance with that determination. In the event the Bureau of Apprenticeship and Training, or a State Apprenticeship Agency recognized by the Bureau, withdraws approval of an apprenticeship program, the Contractor will no longer be permitted to utilize apprentices at less than the applicable predetermined rate for the work performed until an acceptable program is approved.

(b) Trainees. Except as provided in 29 CFR 5.16, trainees will not be permitted to work at less than the predetermined rate for the work performed unless they are employed pursuant to and individually registered in a program which has received prior approval, evidenced by formal certification by the U.S. Department of Labor, Employment and Training Administration. The ratio of trainees to journeymen on the job site shall not be greater than permitted under the plan approved by the Employment and Training Administration. Every trainee must be paid at not less than the rate specified in the approved program for the trainee's level of progress, expressed as a percentage of the journeyman hourly rate specified in the applicable wage determination. Trainees shall be paid fringe benefits in accordance with the provisions of the trainee program. If the trainee program does not mention fringe benefits, trainees shall be paid the full amount of fringe benefits listed in the wage determination unless the

Administrator of the Wage and Hour Division determines that there is an apprenticeship program associated with the corresponding journeyman wage rate in the wage determination which provides for less than full fringe benefits for apprentices. Any employee listed on the payroll at a trainee rate who is not registered and participating in a training plan approved by the Employment and Training Administration shall be paid not less than the applicable wage rate in the wage determination for the classification of work actually performed. In addition, any trainee performing work on the job site in excess of the ratio permitted under the registered program shall be paid not less than the applicable wage rate in the wage determination for the work actually performed. In the event the Employment and Training Administration withdraws approval of a training program, the Contractor will no longer be permitted to utilize trainees at less than the applicable predetermined rate for the work performed until an acceptable program is approved.

(c) Equal employment opportunity. The utilization of apprentices, trainees, and journeymen under this clause shall be in conformity with the equal employment opportunity requirements of Executive Order 11246, as amended, and 29 CFR Part 30.

(End of clause)

52.222-10 COMPLIANCE WITH COPELAND ACT REQUIREMENTS (FEB 1988)

The Contractor shall comply with the requirements of 29 CFR Part 3, which are hereby incorporated by reference in this contract.

(End of clause)

52.222-11 SUBCONTRACTS (LABOR STANDARDS (FEB 1988)

(a) The Contractor or subcontractor shall insert in any subcontracts the clauses entitled Davis-Bacon Act, Contract Work Hours and Safety Standards Act-Overtime Compensation, Apprentices and Trainees, Payrolls and Basic Records, Compliance with Copeland Act Requirements, Withholding of Funds, Subcontracts (Labor Standards), Contract Termination-Debarment, Disputes Concerning Labor Standards, Compliance with Davis-Bacon and Related Act Regulations, and Certification of Eligibility, and such other clauses as the Contracting Officer may, by appropriate instructions, require, and also a clause requiring subcontractors to include these clauses in any lower tier subcontracts. The Prime Contractor shall be responsible for compliance by any subcontractor or lower tier subcontractor with all the contract clauses cited in this paragraph.

(b)(1) Within 14 days after award of the contract, the Contractor shall deliver to the Contracting Officer a completed Statement and Acknowledgment Form (SF 1413) for each subcontract, including the subcontractor's signed and dated acknowledgment that the clauses set forth in paragraph (a) of this clause have been included in the subcontract.

(ii) Within 14 days after the award of any subsequently awarded subcontract the Contractor shall deliver to the Contracting Officer an updated completed SF 1413 for such additional subcontract.

(End of clause)

52.222-12 CONTRACT TERMINATION--DEBARMENT (FEB 1988)

A breach of the contract clauses entitled Davis-Bacon Act, Contract Work Hours and Safety Standards Act--

Overtime Compensation, Apprentices and Trainees, Payrolls and Basic Records, Compliance with Copeland Act Requirements, Subcontracts (Labor Standards), Compliance with Davis-Bacon and Related Act Regulations, or Certification of Eligibility may be grounds for termination of the contract, and for debarment as a Contractor and subcontractor as provided in 29 CFR 5.12.

(End of clause)

52.222-13 COMPLIANCE WITH DAVIS-BACON AND RELATED ACT REGULATIONS (FEB 1988)

All rulings and interpretations of the Davis-Bacon and Related Acts contained in 29 CFR Parts 1, 3, and 5 are hereby incorporated by reference in this contract.

(End of clause)

52.222-14 DISPUTES CONCERNING LABOR STANDARDS (FEB 1988)

The United States Department of Labor has set forth in 29 CFR Parts 5, 6, and 7 procedures for resolving disputes concerning labor standards requirements. Such disputes shall be resolved in accordance with those procedures and not the Disputes clause of this contract. Disputes within the meaning of this clause include disputes between the Contractor (or any of its subcontractors) and the contracting agency, the U.S. Department of Labor, or the employees or their representatives.

(End of clause)

52.222-15 CERTIFICATION OF ELIGIBILITY (FEB 1988)

(a) By entering into this contract, the Contractor certifies that neither it (nor he or she) nor any person or firm who has an interest in the Contractor's firm is a person or firm ineligible to be awarded Government contracts by virtue of section 3(a) of the Davis-Bacon Act or 29 CFR 5.12(a)(1).

(b) No part of this contract shall be subcontracted to any person or firm ineligible for award of a Government contract by virtue of section 3(a) of the Davis-Bacon Act or 29 CFR 5.12(a)(1).

(3) The penalty for making false statements is prescribed in the U.S. Criminal Code, 18 U.S.C. 1001.

(End of clause)

52.222-21 PROHIBITION OF SEGREGATED FACILITIES (FEB 1999)

(a) Segregated facilities, as used in this clause, means any waiting rooms, work areas, rest rooms and wash rooms, restaurants and other eating areas, time clocks, locker rooms and other storage or dressing areas, parking lots, drinking fountains, recreation or entertainment areas, transportation, and housing facilities provided for employees, that are segregated by explicit directive or are in fact segregated on the basis of race, color, religion, sex, or national origin because of written or oral policies or employee custom. The term does not include separate or single-user rest rooms or necessary dressing or sleeping areas provided to assure privacy between the sexes.

(b) The Contractor agrees that it does not and will not maintain or provide for its employees any segregated facilities at any of its establishments, and that it does not and will not permit its employees to perform their services at any location under its control where segregated facilities are maintained. The Contractor agrees that a breach of this clause is a violation of the Equal Opportunity clause in this contract.

(c) The Contractor shall include this clause in every subcontract and purchase order that is subject to the Equal Opportunity clause of this contract.

(End of clause)

52.222-26 EQUAL OPPORTUNITY (APR 2002)

(a) Definition. United States, as used in this clause, means the 50 States, the District of Columbia, Puerto Rico, the Northern Mariana Islands, American Samoa, Guam, the U.S. Virgin Islands, and Wake Island.

(b) If, during any 12-month period (including the 12 months preceding the award of this contract), the Contractor has been or is awarded nonexempt Federal contracts and/or subcontracts that have an aggregate value in excess of $10,000, the Contractor shall comply with paragraphs (b)(1) through (b)(11) of this clause, except for work performed outside the United States by employees who were not recruited within the United States. Upon request, the Contractor shall provide information necessary to determine the applicability of this clause.

(1) The Contractor shall not discriminate against any employee or applicant for employment because of race, color, religion, sex, or national origin. However, it shall not be a violation of this clause for the Contractor to extend a publicly announced preference in employment to Indians living on or near an Indian reservation, in connection with employment opportunities on or near an Indian reservation, as permitted by 41 CFR 60-1.5.

(2) The Contractor shall take affirmative action to ensure that applicants are employed, and that employees are treated during employment, without regard to their race, color, religion, sex, or national origin. This shall include, but not be limited to, (i) employment, (ii) upgrading, (iii) demotion, (iv) transfer, (v) recruitment or recruitment advertising, (vi) layoff or termination, (vii) rates of pay or other forms of compensation, and (viii) selection for training, including apprenticeship.

(3) The Contractor shall post in conspicuous places available to employees and applicants for employment the notices to be provided by the Contracting Officer that explain this clause.

(4) The Contractor shall, in all solicitations or advertisements for employees placed by or on behalf of the Contractor, state that all qualified applicants will receive consideration for employment without regard to race, color, religion, sex, or national origin.

(5) The Contractor shall send, to each labor union or representative of workers with which it has a collective bargaining agreement or other contract or understanding, the notice to be provided by the Contracting Officer advising the labor union or workers' representative of the Contractor's commitments under this clause, and post copies of the notice in conspicuous places available to employees and applicants for employment.

(6) The Contractor shall comply with Executive Order 11246, as amended, and the rules, regulations, and orders of the Secretary of Labor.

(7) The Contractor shall furnish to the contracting agency all information required by Executive Order 11246, as amended, and by the rules, regulations, and orders of the Secretary of Labor. The Contractor shall also file Standard Form 100 (EEO-1), or any successor form, as prescribed in 41 CFR part 60-1. Unless the Contractor has filed within the 12 months preceding the date of contract award, the Contractor shall, within 30 days after contract award,

apply to either the regional Office of Federal Contract Compliance Programs (OFCCP) or the local office of the Equal Employment Opportunity Commission for the necessary forms.

(8) The Contractor shall permit access to its premises, during normal business hours, by the contracting agency or the OFCCP for the purpose of conducting on-site compliance evaluations and complaint investigations. The Contractor shall permit the Government to inspect and copy any books, accounts, records (including computerized records), and other material that may be relevant to the matter under investigation and pertinent to compliance with Executive Order 11246, as amended, and rules and regulations that implement the Executive Order.

(9) If the OFCCP determines that the Contractor is not in compliance with this clause or any rule, regulation, or order of the Secretary of Labor, this contract may be canceled, terminated, or suspended in whole or in part and the Contractor may be declared ineligible for further Government contracts, under the procedures authorized in Executive Order 11246, as amended. In addition, sanctions may be imposed and remedies invoked against the Contractor as provided in Executive Order 11246, as amended; in the rules, regulations, and orders of the Secretary of Labor; or as otherwise provided by law.

(10) The Contractor shall include the terms and conditions of subparagraphs (b)(1) through (11) of this clause in every subcontract or purchase order that is not exempted by the rules, regulations, or orders of the Secretary of Labor issued under Executive Order 11246, as amended, so that these terms and conditions will be binding upon each subcontractor or vendor.

(11) The Contractor shall take such action with respect to any subcontract or purchase order as the contracting officer may direct as a means of enforcing these terms and conditions, including sanctions for noncompliance; provided, that if the Contractor becomes involved in, or is threatened with, litigation with a subcontractor or vendor as a result of any direction, the Contractor may request the United States to enter into the litigation to protect the interests of the United States.

(c) Notwithstanding any other clause in this contract, disputes relative to this clause will be governed by the procedures in 41 CFR 60-1.1.

(End of clause)

52.222-27 AFFIRMATIVE ACTION COMPLIANCE REQUIREMENTS FOR CONSTRUCTION (FEB 1999)

(a) Definitions. "Covered area," as used in this clause, means the geographical area described in the solicitation for this contract.

"Deputy Assistant Secretary," as used in this clause, means Deputy Assistant Secretary for Federal Contract Compliance, U.S. Department of Labor, or a designee.

"Employer's identification number," as used in this clause, means the Federal Social Security number used on the employer's quarterly federal tax return, U.S. Treasury Department Form 941.

"Minority," as used in this clause, means--

(1) American Indian or Alaskan Native (all persons having origins in any of the original peoples of North America and maintaining identifiable tribal affiliations through membership and participation or community identification).

(2) Asian and Pacific Islander (all persons having origins in any of the original peoples of the Far East, Southeast Asia, the Indian Subcontinent, or the Pacific Islands);

(3) Black (all persons having origins in any of the black African racial groups not of Hispanic origin); and

(4) Hispanic (all persons of Mexican, Puerto Rican, Cuban, Central or South American, or other Spanish culture or origin, regardless of race).

(b) If the Contractor, or a subcontractor at any tier, subcontracts a portion of the work involving any construction trade, each such subcontract in excess of $10,000 shall include this clause and the Notice containing the goals for minority and female participation stated in the solicitation for this contract.

(c) If the Contractor is participating in a Hometown Plan (41 CFR 60-4) approved by the U.S. Department of Labor in a covered area, either individually or through an association, its affirmative action obligations on all work in the plan area (including goals) shall comply with the plan for those trades that have unions participating in the plan. Contractors must be able to demonstrate participation in, and compliance with, the provisions of the plan. Each Contractor or subcontractor participating in an approved plan is also required to comply with its obligations under the Equal Opportunity clause, and to make a good faith effort to achieve each goal under the plan in each trade in which it has employees. The overall good-faith performance by other Contractors or subcontractors toward a goal in an approved plan does not excuse any Contractor's or subcontractor's failure to make good-faith efforts to achieve the plan's goals.

(d) The Contractor shall implement the affirmative action procedures in subparagraphs (g)(1) through (16) of this clause. The goals stated in the solicitation for this contract are expressed as percentages of the total hours of employment and training of minority and female utilization that the Contractor should reasonably be able to achieve in each construction trade in which it has employees in the covered area. If the Contractor performs construction work in a geographical area located outside of the covered area, it shall apply the goals established for the geographical area where that work is actually performed. The Contractor is expected to make substantially uniform progress toward its goals in each craft.

(e) Neither the terms and conditions of any collective bargaining agreement, nor the failure by a union with which the Contractor has a collective bargaining agreement, to refer minorities or women shall excuse the Contractor's obligations under this clause, Executive Order 11246, as amended, or the regulations thereunder.

(f) In order for the nonworking training hours of apprentices and trainees to be counted in meeting the goals, apprentices and trainees must be employed by the Contractor during the training period, and the Contractor must have made a commitment to employ the apprentices and trainees at the completion of their training, subject to the availability of employment opportunities. Trainees must be trained pursuant to training programs approved by the U.S. Department of Labor.

(g) The Contractor shall take affirmative action to ensure equal employment opportunity. The evaluation of the Contractor's compliance with this clause shall be based upon its effort to achieve maximum results from its actions. The Contractor shall document these efforts fully and implement affirmative action steps at least as extensive as the following:

(1) Ensure a working environment free of harassment, intimidation, and coercion at all sites and in all facilities where the Contractor's employees are assigned to work. The Contractor, if possible, will assign two or more women to each construction project. The Contractor shall ensure that foremen, superintendents, and other onsite supervisory personnel are aware of and carry out the Contractor's obligation to maintain such a working environment, with specific attention to minority or female individuals working at these sites or facilities.

(2) Establish and maintain a current list of sources for minority and female recruitment. Provide written notification to minority and female recruitment sources and community organizations when the Contractor or its unions have employment opportunities available, and maintain a record of the organizations' responses.

(3) Establish and maintain a current file of the names, addresses, and telephone numbers of each minority and female off-the-street applicant, referrals of minorities or females from unions, recruitment sources, or community organizations, and the action taken with respect to each individual. If an individual was sent to the union hiring hall

for referral and not referred back to the Contractor by the union or, if referred back, not employed by the Contractor, this shall be documented in the file, along with whatever additional actions the Contractor may have taken.

(4) Immediately notify the Deputy Assistant Secretary when the union or unions with which the Contractor has a collective bargaining agreement has not referred back to the Contractor a minority or woman sent by the Contractor, or when the Contractor has other information that the union referral process has impeded the Contractor's efforts to meet its obligations.

(5) Develop on-the-job training opportunities and/or participate in training programs for the area that expressly include minorities and women, including upgrading programs and apprenticeship and trainee programs relevant to the Contractor's employment needs, especially those programs funded or approved by the Department of Labor. The Contractor shall provide notice of these programs to the sources compiled under subparagraph (g)(2) of this clause.

(6) Disseminate the Contractor's equal employment policy by--

(i) Providing notice of the policy to unions and to training, recruitment, and outreach programs, and requesting their cooperation in assisting the Contractor in meeting its contract obligations;

(ii) Including the policy in any policy manual and in collective bargaining agreements;

(iii) Publicizing the policy in the company newspaper, annual report, etc.;

(iv) Reviewing the policy with all management personnel and with all minority and female employees at least once a year; and

(v) Posting the policy on bulletin boards accessible to employees at each location where construction work is performed.

(7) Review, at least annually, the Contractor's equal employment policy and affirmative action obligations with all employees having responsibility for hiring, assignment, layoff, termination, or other employment decisions. Conduct review of this policy with all on-site supervisory personnel before initiating construction work at a job site. A written record shall be made and maintained identifying the time and place of these meetings, persons attending, subject matter discussed, and disposition of the subject matter.

(8) Disseminate the Contractor's equal employment policy externally by including it in any advertising in the news media, specifically including minority and female news media. Provide written notification to, and discuss this policy with, other Contractors and subcontractors with which the Contractor does or anticipates doing business.

(9) Direct recruitment efforts, both oral and written, to minority, female, and community organizations, to schools with minority and female students, and to minority and female recruitment and training organizations serving the Contractor's recruitment area and employment needs. Not later than 1 month before the date for acceptance of applications for apprenticeship or training by any recruitment source, send written notification to organizations such as the above, describing the openings, screening procedures, and tests to be used in the selection process.

(10) Encourage present minority and female employees to recruit minority persons and women. Where reasonable, provide after-school, summer, and vacation employment to minority and female youth both on the site and in other areas of the Contractor's workforce.

(11) Validate all tests and other selection requirements where required under 41 CFR 60-3.

(12) Conduct, at least annually, an inventory and evaluation at least of all minority and female personnel for promotional opportunities. Encourage these employees to seek or to prepare for, through appropriate training, etc., opportunities for promotion.

(13) Ensure that seniority practices, job classifications, work assignments, and other personnel practices do not have a discriminatory effect by continually monitoring all personnel and employment-related activities to ensure that the Contractor's obligations under this contract are being carried out.

(14) Ensure that all facilities and company activities are nonsegregated except that separate or single-user rest rooms and necessary dressing or sleeping areas shall be provided to assure privacy between the sexes.

(15) Maintain a record of solicitations for subcontracts for minority and female construction contractors and suppliers, including circulation of solicitations to minority and female contractor associations and other business associations.

(16) Conduct a review, at least annually, of all supervisors' adherence to and performance under the Contractor's equal employment policy and affirmative action obligations.

(h) The Contractor is encouraged to participate in voluntary associations that may assist in fulfilling one or more of the affirmative action obligations contained in subparagraphs (g)(1) through (16) of this clause. The efforts of a contractor association, joint contractor-union, contractor-community, or similar group of which the contractor is a member and participant may be asserted as fulfilling one or more of its obligations under subparagraphs (g)(1) through (16) of this clause, provided the Contractor--

(1) Actively participates in the group;

(2) Makes every effort to ensure that the group has a positive impact on the employment of minorities and women in the industry;

(3) Ensures that concrete benefits of the program are reflected in the Contractor's minority and female workforce participation;

(4) Makes a good-faith effort to meet its individual goals and timetables; and

(5) Can provide access to documentation that demonstrates the effectiveness of actions taken on behalf of the Contractor. The obligation to comply is the Contractor's, and failure of such a group to fulfill an obligation shall not be a defense for the Contractor's noncompliance.

(i) A single goal for minorities and a separate single goal for women shall be established. The Contractor is required to provide equal employment opportunity and to take affirmative action for all minority groups, both male and female, and all women, both minority and nonminority. Consequently, the Contractor may be in violation of Executive Order 11246, as amended, if a particular group is employed in a substantially disparate manner.

(j) The Contractor shall not use goals or affirmative action standards to discriminate against any person because of race, color, religion, sex, or national origin.

(k) The Contractor shall not enter into any subcontract with any person or firm debarred from Government contracts under Executive Order 11246, as amended.

(l) The Contractor shall carry out such sanctions and penalties for violation of this clause and of the Equal Opportunity clause, including suspension, termination, and cancellation of existing subcontracts, as may be imposed or ordered under Executive Order 11246, as amended, and its implementing regulations, by the OFCCP. Any failure to carry out these sanctions and penalties as ordered shall be a violation of this clause and Executive Order 11246, as amended.

(m) The Contractor in fulfilling its obligations under this clause shall implement affirmative action procedures at least as extensive as those prescribed in paragraph (g) of this clause, so as to achieve maximum results from its

efforts to ensure equal employment opportunity. If the Contractor fails to comply with the requirements of Executive Order 11246, as amended, the implementing regulations, or this clause, the Deputy Assistant Secretary shall take action as prescribed in 41 CFR 60-4.8.

(n) The Contractor shall designate a responsible official to--

(1) Monitor all employment-related activity to ensure that the Contractor's equal employment policy is being carried out;

(2) Submit reports as may be required by the Government; and

(3) Keep records that shall at least include for each employee the name, address, telephone number, construction trade, union affiliation (if any), employee identification number, social security number, race, sex, status (e.g., mechanic, apprentice, trainee, helper, or laborer), dates of changes in status, hours worked per week in the indicated trade, rate of pay, and locations at which the work was performed. Records shall be maintained in an easily understandable and retrievable form; however, to the degree that existing records satisfy this requirement, separate records are not required to be maintained.

Nothing contained herein shall be construed as a limitation upon the application of other laws that establish different standards of compliance or upon the requirements for the hiring of local or other area residents (e.g., those under the Public Works Employment Act of 1977 and the Community Development Block Grant Program).

(End of clause)

52.222-35 EQUAL OPPORTUNITY FOR SPECIAL DISABLED VETERANS, VETERANS OF THE VIETNAM ERA, AND OTHER ELIGIBLE VETERANS (DEC 2001)

(a) Definitions. As used in this clause--

All employment openings means all positions except executive and top management, those positions that will be filled from within the Contractor's organization, and positions lasting 3 days or less. This term includes full-time employment, temporary employment of more than 3 days duration, and part-time employment.

Executive and top management means any employee--

(1) Whose primary duty consists of the management of the enterprise in which the individual is employed or of a customarily recognized department or subdivision thereof;

(2) Who customarily and regularly directs the work of two or more other employees;

(3) Who has the authority to hire or fire other employees or whose suggestions and recommendations as to the hiring or firing and as to the advancement and promotion or any other change of status of other employees will be given particular weight;

(4) Who customarily and regularly exercises discretionary powers; and

(5) Who does not devote more than 20 percent or, in the case of an employee of a retail or service establishment, who does not devote more than 40 percent of total hours of work in the work week to activities that are not directly and closely related to the performance of the work described in paragraphs (1) through (4) of this definition. This paragraph (5) does not apply in the case of an employee who is in sole charge of an establishment or a physically separated branch establishment, or who owns at least a 20 percent interest in the enterprise in which the individual is employed.

Other eligible veteran means any other veteran who served on active duty during a war or in a campaign or expedition for which a campaign badge has been authorized.

Positions that will be filled from within the Contractor's organization means employment openings for which the Contractor will give no consideration to persons outside the Contractor's organization (including any affiliates, subsidiaries, and parent companies) and includes any openings the Contractor proposes to fill from regularly established “recall” lists. The exception does not apply to a particular opening once an employer decides to consider applicants outside of its organization.

Qualified special disabled veteran means a special disabled veteran who satisfies the requisite skill, experience, education, and other job-related requirements of the employment position such veteran holds or desires, and who, with or without reasonable accommodation, can perform the essential functions of such position.

Special disabled veteran means--

(1) A veteran who is entitled to compensation (or who but for the receipt of military retired pay would be entitled to compensation) under laws administered by the Department of Veterans Affairs for a disability--

(i) Rated at 30 percent or more; or

(ii) Rated at 10 or 20 percent in the case of a veteran who has been determined under 38 U.S.C. 3106 to have a serious employment handicap (i.e., a significant impairment of the veteran's ability to prepare for, obtain, or retain employment consistent with the veteran's abilities, aptitudes, and interests); or

(2) A person who was discharged or released from active duty because of a service-connected disability.

Veteran of the Vietnam era means a person who--

(1) Served on active duty for a period of more than 180 days and was discharged or released from active duty with other than a dishonorable discharge, if any part of such active duty occurred--

(i) In the Republic of Vietnam between February 28, 1961, and May 7, 1975; or

(ii) Between August 5, 1964, and May 7, 1975, in all other cases; or

(2) Was discharged or released from active duty for a service-connected disability if any part of the active duty was performed--

(i) In the Republic of Vietnam between February 28, 1961, and May 7, 1975; or

(ii) Between August 5, 1964, and May 7, 1975, in all other cases.
(b) General. (1) The Contractor shall not discriminate against the individual because the individual is a special disabled veteran, a veteran of the Vietnam era, or other eligible veteran, regarding any position for which the employee or applicant for employment is qualified. The Contractor shall take affirmative action to employ, advance in employment, and otherwise treat qualified special disabled veterans, veterans of the Vietnam era, and other eligible veterans without discrimination based upon their disability or veterans' status in all employment practices such as--

(i) Recruitment, advertising, and job application procedures;

(ii) Hiring, upgrading, promotion, award of tenure, demotion, transfer, layoff, termination, right of return from layoff and rehiring;

(iii) Rate of pay or any other form of compensation and changes in compensation;

(iv) Job assignments, job classifications, organizational structures, position descriptions, lines of progression, and seniority lists;

(v) Leaves of absence, sick leave, or any other leave;

(vi) Fringe benefits available by virtue of employment, whether or not administered by the Contractor;

(vii) Selection and financial support for training, including apprenticeship, and on-the-job training under 38 U.S.C. 3687, professional meetings, conferences, and other related activities, and selection for leaves of absence to pursue training;

(viii) Activities sponsored by the Contractor including social or recreational programs; and

(ix) Any other term, condition, or privilege of employment.

(2) The Contractor shall comply with the rules, regulations, and relevant orders of the Secretary of Labor issued under the Vietnam Era Veterans' Readjustment Assistance Act of 1972 (the Act), as amended (38 U.S.C. 4211 and 4212).

(c) Listing openings. (1) The Contractor shall immediately list all employment openings that exist at the time of the execution of this contract and those which occur during the performance of this contract, including those not generated by this contract, and including those occurring at an establishment of the Contractor other than the one where the contract is being performed, but excluding those of independently operated corporate affiliates, at an appropriate local public employment service office of the State wherein the opening occurs. Listing employment openings with the U.S. Department of Labor's America's Job Bank shall satisfy the requirement to list jobs with the local employment service office.

(2) The Contractor shall make the listing of employment openings with the local employment service office at least concurrently with using any other recruitment source or effort and shall involve the normal obligations of placing a bona fide job order, including accepting referrals of veterans and nonveterans. This listing of employment openings does not require hiring any particular job applicant or hiring from any particular group of job applicants and is not intended to relieve the Contractor from any requirements of Executive orders or regulations concerning nondiscrimination in employment.

(3) Whenever the Contractor becomes contractually bound to the listing terms of this clause, it shall advise the State public employment agency in each State where it has establishments of the name and location of each hiring location in the State. As long as the Contractor is contractually bound to these terms and has so advised the State agency, it need not advise the State agency of subsequent contracts. The Contractor may advise the State agency when it is no longer bound by this contract clause.

(d) Applicability. This clause does not apply to the listing of employment openings that occur and are filled outside the 50 States, the District of Columbia, the Commonwealth of Puerto Rico, the Commonwealth of the Northern Mariana Islands, American Samoa, Guam, the Virgin Islands of the United States, and Wake Island.

(e) Postings. (1) The Contractor shall post employment notices in conspicuous places that are available to employees and applicants for employment.

(2) The employment notices shall--

(i) State the rights of applicants and employees as well as the Contractor's obligation under the law to take affirmative action to employ and advance in employment qualified employees and applicants who are special disabled veterans, veterans of the Vietnam era, and other eligible veterans; and

(ii) Be in a form prescribed by the Deputy Assistant Secretary for Federal Contract Compliance Programs, Department of Labor (Deputy Assistant Secretary of Labor), and provided by or through the Contracting Officer.

(3) The Contractor shall ensure that applicants or employees who are special disabled veterans are informed of the contents of the notice (e.g., the Contractor may have the notice read to a visually disabled veteran, or may lower the posted notice so that it can be read by a person in a wheelchair).

(4) The Contractor shall notify each labor union or representative of workers with which it has a collective bargaining agreement, or other contract understanding, that the Contractor is bound by the terms of the Act and is committed to take affirmative action to employ, and advance in employment, qualified special disabled veterans, veterans of the Vietnam era, and other eligible veterans.

(f) Noncompliance. If the Contractor does not comply with the requirements of this clause, the Government may take appropriate actions under the rules, regulations, and relevant orders of the Secretary of Labor issued pursuant to the Act.

(g) Subcontracts. The Contractor shall insert the terms of this clause in all subcontracts or purchase orders of $25,000 or more unless exempted by rules, regulations, or orders of the Secretary of Labor. The Contractor shall act as specified by the Deputy Assistant Secretary of Labor to enforce the terms, including action for noncompliance.

(End of clause)

52.222-36 AFFIRMATIVE ACTION FOR WORKERS WITH DISABILITIES (JUN 1998)

(a) General. (1) Regarding any position for which the employee or applicant for employment is qualified, the Contractor shall not discriminate against any employee or applicant because of physical or mental disability. The Contractor agrees to take affirmative action to employ, advance in employment, and otherwise treat qualified individuals with disabilities without discrimination based upon their physical or mental disability in all employment practices such as--

(i) Recruitment, advertising, and job application procedures;

(ii) Hiring, upgrading, promotion, award of tenure, demotion, transfer, layoff, termination, right of return from layoff, and rehiring;

(iii) Rates of pay or any other form of compensation and changes in compensation;

(iv) Job assignments, job classifications, organizational structures, position descriptions, lines of progression, and seniority lists;

(v) Leaves of absence, sick leave, or any other leave;

(vi) Fringe benefits available by virtue of employment, whether or not administered by the Contractor;

(vii) Selection and financial support for training, including apprenticeships, professional meetings, conferences, and other related activities, and selection for leaves of absence to pursue training;

(viii) Activities sponsored by the Contractor, including social or recreational programs; and

(ix) Any other term, condition, or privilege of employment.

(2) The Contractor agrees to comply with the rules, regulations, and relevant orders of the Secretary of Labor (Secretary) issued under the Rehabilitation Act of 1973 (29 U.S.C. 793) (the Act), as amended.

(b) Postings. (1) The Contractor agrees to post employment notices stating--

(i) The Contractor's obligation under the law to take affirmative action to employ and advance in employment qualified individuals with disabilities; and

(ii) The rights of applicants and employees.

(2) These notices shall be posted in conspicuous places that are available to employees and applicants for employment. The Contractor shall ensure that applicants and employees with disabilities are informed of the contents of the notice (e.g., the Contractor may have the notice read to a visually disabled individual, or may lower the posted notice so that it might be read by a person in a wheelchair). The notices shall be in a form prescribed by the Deputy Assistant Secretary for Federal Contract Compliance of the U.S. Department of Labor (Deputy Assistant Secretary) and shall be provided by or through the Contracting Officer.

(3) The Contractor shall notify each labor union or representative of workers with which it has a collective bargaining agreement or other contract understanding, that the Contractor is bound by the terms of Section 503 of the Act and is committed to take affirmative action to employ, and advance in employment, qualified individuals with physical or mental disabilities.

(c) Noncompliance. If the Contractor does not comply with the requirements of this clause, appropriate actions may be taken under the rules, regulations, and relevant orders of the Secretary issued pursuant to the Act.

(d) Subcontracts. The Contractor shall include the terms of this clause in every subcontract or purchase order in excess of $10,000 unless exempted by rules, regulations, or orders of the Secretary. The Contractor shall act as specified by the Deputy Assistant Secretary to enforce the terms, including action for noncompliance.

(End of clause)

52.222-37 EMPLOYMENT REPORTS ON SPECIAL DISABLED VETERANS, VETERANS OF THE VIETNAM ERA, AND OTHER ELIGIBLE VETERANS (DEC 2001)

(a) Unless the Contractor is a State or local government agency, the Contractor shall report at least annually, as required by the Secretary of Labor, on--

(1) The number of disabled veterans and the number of veterans of the Vietnam era in the workforce of the contractor by job category and hiring location; and

(2) The total number of new employees hired during the period covered by the report, and of that total, the number of disabled veterans, and the number of veterans of the Vietnam era.

(b) The above items shall be reported by completing the form entitled "Federal Contractor Veterans' Employment Report VETS-100."

(c) Reports shall be submitted no later than September 30 of each year beginning September 30, 1988.

(d) The employment activity report required by paragraph (a)(2) of this clause shall reflect total hires during the most recent 12-month period as of the ending date selected for the employment profile report required by paragraph (a)(1) of this clause. Contractors may select an ending date: (1) As of the end of any pay period during the period January through March 1st of the year the report is due, or (2) as of December 31, if the contractor has previous

written approval from the Equal Employment Opportunity Commission to do so for purposes of submitting the Employer Information Report EEO-1 (Standard Form 100).

(e) The count of veterans reported according to paragraph (a) of this clause shall be based on voluntary disclosure. Each Contractor subject to the reporting requirements at 38 U.S.C. 4212 shall invite all disabled veterans and veterans of the Vietnam era who wish to benefit under the affirmative action program at 38 U.S.C. 4212 to identify themselves to the Contractor. The invitation shall state that the information is voluntarily provided; that the information will be kept confidential; that disclosure or refusal to provide the information will not subject the applicant or employee to any adverse treatment; and that the information will be used only in accordance with the regulations promulgated under 38 U.S.C. 4212.

(f) Subcontracts. The Contractor shall include the terms of this clause in every subcontract or purchase order of $10,000 or more unless exempted by rules, regulations, or orders of the Secretary.

(End of clause)

52.223-3 HAZARDOUS MATERIAL IDENTIFICATION AND MATERIAL SAFETY DATA (JAN 1997)

(a) "Hazardous material", as used in this clause, includes any material defined as hazardous under the latest version of Federal Standard No. 313 (including revisions adopted during the term of the contract).

(b) The offeror must list any hazardous material, as defined in paragraph (a) of this clause, to be delivered under this contract. The hazardous material shall be properly identified and include any applicable identification number, such as National Stock Number or Special Item Number. This information shall also be included on the Material Safety Data Sheet submitted under this contract.

Material (If none, insert "None")	Identification No.
_____	_____
_____	_____
_____	_____

(c) This list must be updated during performance of the contract whenever the Contractor determines that any other material to be delivered under this contract is hazardous.

(d) The apparently successful offeror agrees to submit, for each item as required prior to award, a Material Safety Data Sheet, meeting the requirements of 29 CFR 1910.1200(g) and the latest version of Federal Standard No. 313, for all hazardous material identified in paragraph (b) of this clause. Data shall be submitted in accordance with Federal Standard No. 313, whether or not the apparently successful offeror is the actual manufacturer of these items. Failure to submit the Material Safety Data Sheet prior to award may result in the apparently successful offeror being considered nonresponsible and ineligible for award.

(e) If, after award, there is a change in the composition of the item(s) or a revision to Federal Standard No. 313, which renders incomplete or inaccurate the data submitted under paragraph (d) of this clause, the Contractor shall promptly notify the Contracting Officer and resubmit the data.

(f) Neither the requirements of this clause nor any act or failure to act by the Government shall relieve the Contractor of any responsibility or liability for the safety of Government, Contractor, or subcontractor personnel or

property.

(g) Nothing contained in this clause shall relieve the Contractor from complying with applicable Federal, State, and local laws, codes, ordinances, and regulations (including the obtaining of licenses and permits) in connection with hazardous material.

(h) The Government's rights in data furnished under this contract with respect to hazardous material are as follows:

(1) To use, duplicate and disclose any data to which this clause is applicable. The purposes of this right are to--

(i) Apprise personnel of the hazards to which they may be exposed in using, handling, packaging, transporting, or disposing of hazardous materials;

(ii) Obtain medical treatment for those affected by the material; and

(iii) Have others use, duplicate, and disclose the data for the Government for these purposes.

(2) To use, duplicate, and disclose data furnished under this clause, in accordance with subparagraph (h)(1) of this clause, in precedence over any other clause of this contract providing for rights in data.

(3) The Government is not precluded from using similar or identical data acquired from other sources.

(End of clause)

52.223-6 DRUG-FREE WORKPLACE (MAY 2001)

(a) Definitions. As used in this clause --

"Controlled substance" means a controlled substance in schedules I through V of section 202 of the Controlled Substances Act (21 U.S.C. 812) and as further defined in regulation at 21 CFR 1308.11 - 1308.15.

"Conviction" means a finding of guilt (including a plea of nolo contendere) or imposition of sentence, or both, by any judicial body charged with the responsibility to deter- mine violations of the Federal or State criminal drug statutes.

"Criminal drug statute" means a Federal or non-Federal criminal statute involving the manufacture, distribution, dispensing, possession, or use of any controlled substance.

"Drug-free workplace" means the site(s) for the performance of work done by the Contractor in connection with a specific contract at which employees of the Contractor are prohibited from engaging in the unlawful manufacture, distribution, dispensing, possession, or use of a controlled substance.

"Employee" means an employee of a Contractor directly engaged in the performance of work under a Government contract. "Directly engaged" is defined to include all direct cost employees and any other Contractor employee who has other than a minimal impact or involvement in contract performance.

"Individual" means an offeror/contractor that has no more than one employee including the offeror/contractor.

(b) The Contractor, if other than an individual, shall-- within 30 days after award (unless a longer period is agreed to in writing for contracts of 30 days or more performance duration), or as soon as possible for contracts of less than 30 days performance duration--

(1) Publish a statement notifying its employees that the unlawful manufacture, distribution, dispensing, possession,

or use of a controlled substance is prohibited in the Contractor's workplace and specifying the actions that will be taken against employees for violations of such prohibition;

(2) Establish an ongoing drug-free awareness program to inform such employees about--

(i) The dangers of drug abuse in the workplace;

(ii) The Contractor's policy of maintaining a drug-free workplace;

(iii) Any available drug counseling, rehabilitation, and employee assistance programs; and

(iv) The penalties that may be imposed upon employees for drug abuse violations occurring in the workplace;

(3) Provide all employees engaged in performance of the contract with a copy of the statement required by subparagraph (b)(1) of this clause;

(4) Notify such employees in writing in the statement required by subparagraph (b)(1) of this clause that, as a condition of continued employment on this contract, the employee will--

(i) Abide by the terms of the statement; and

(ii) Notify the employer in writing of the employee's conviction under a criminal drug statute for a violation occurring in the workplace no later than 5 days after such conviction.

(5) Notify the Contracting Officer in writing within 10 days after receiving notice under subdivision (b)(4)(ii) of this clause, from an employee or otherwise receiving actual notice of such conviction. The notice shall include the position title of the employee;

(6) Within 30 days after receiving notice under subdivision (b)(4)(ii) of this clause of a conviction, take one of the following actions with respect to any employee who is convicted of a drug abuse violation occurring in the workplace:

(i) Taking appropriate personnel action against such employee, up to and including termination; or

(ii) Require such employee to satisfactorily participate in a drug abuse assistance or rehabilitation program approved for such purposes by a Federal, State, or local health, law enforcement, or other appropriate agency; and

(7) Make a good faith effort to maintain a drug-free workplace through implementation of subparagraphs (b)(1) though (b)(6) of this clause.

(c) The Contractor, if an individual, agrees by award of the contract or acceptance of a purchase order, not to engage in the unlawful manufacture, distribution, dispensing, possession, or use of a controlled substance while performing this contract.

(d) In addition to other remedies available to the Government, the Contractor's failure to comply with the requirements of paragraph (b) or (c) of this clause may, pursuant to FAR 23.506, render the Contractor subject to suspension of contract payments, termination of the contract for default, and suspension or debarment.

(End of clause)

52.223-14 TOXIC CHEMICAL RELEASE REPORTING (AUG 2003)

(a) Unless otherwise exempt, the Contractor, as owner or operator of a facility used in the performance of this contract, shall file by July 1 for the prior calendar year an annual Toxic Chemical Release Inventory Form (Form R) as described in sections 313(a) and (g) of the Emergency Planning and Community Right-to-Know Act of 1986 (EPCRA) (42 U.S.C. 11023(a) and (g)), and section 6607 of the Pollution Prevention Act of 1990 (PPA) (42 U.S.C. 13106). The Contractor shall file, for each facility subject to the Form R filing and reporting requirements, the annual Form R throughout the life of the contract.

(b) A Contractor-owned or -operated facility used in the performance of this contract is exempt from the requirement to file an annual Form R if--

(1) The facility does not manufacture, process, or otherwise use any toxic chemicals listed in 40 CFR 372.65;

(2) The facility does not have 10 or more full-time employees as specified in section 313(b)(1)(A) of EPCRA, 42 U.S.C. 11023(b)(1)(A);

(3) The facility does not meet the reporting thresholds of toxic chemicals established under of EPCRA, 42 U.S.C. 11023(f) (including the alternate thresholds at 40 CFR 372.27, provided an appropriate certification form has been filed with EPA);

(4) The facility does not fall within the following Standard Industrial Classification (SIC) codes or their corresponding North American Industry Classification System sectors:

(i) Major group code 10 (except 1011, 1081, and 1094.

(ii) Major group code 12 (except 1241).

(iii) Major group codes 20 through 39.

(iv) Industry code 4911, 4931, or 4939 (limited to facilities that combust coal and/or oil for the purpose of generating power for distribution in commerce).

(v) Industry code 4953 (limited to facilities regulated under the Resource Conservation and Recovery Act, Subtitle C (42 U.S.C. 6921, et seq.)), 5169, 5171, or 7389 (limited to facilities primarily engaged in solvent recovery services on a contract or fee basis); or

(5) The facility is not located in the United States or its outlying areas.

(c) If the Contractor has certified to an exemption in accordance with one or more of the criteria in paragraph (b) of this clause, and after award of the contract circumstances change so that any of its owned or operated facilities used in the performance of this contract is no longer exempt--

(1) The Contractor shall notify the Contracting Officer; and

(2) The Contractor, as owner or operator of a facility used in the performance of this contract that is no longer exempt, shall (i) submit a Toxic Chemical Release Inventory Form (Form R) on or before July 1 for the prior calendar year during which the facility becomes eligible; and (ii) continue to file the annual Form R for the life of the contract for such facility.

(d) The Contracting Officer may terminate this contract or take other action as appropriate, if the Contractor fails to comply accurately and fully with the EPCRA and PPA toxic chemical release filing and reporting requirements.

(e) Except for acquisitions of commercial items, as defined in FAR Part 2, the Contractor shall--

(1) For competitive subcontracts expected to exceed $100,000 (including all options), include a solicitation provision substantially the same as the provision at FAR 52.223-13, Certification of Toxic Chemical Release Reporting; and

(2) Include in any resultant subcontract exceeding $100,000 (including all options), the substance of this clause, except this paragraph (e).

(End of clause)

52.225-9 BUY AMERICAN ACT—CONSTRUCTION MATERIALS (JUN 2003)

(a) Definitions. As used in this clause--

Component means an article, material, or supply incorporated directly into a construction material.

Construction material means an article, material, or supply brought to the construction site by the Contractor or a subcontractor for incorporation into the building or work. The term also includes an item brought to the site preassembled from articles, materials, or supplies. However, emergency life safety systems, such as emergency lighting, fire alarm, and audio evacuation systems, that are discrete systems incorporated into a public building or work and that are produced as complete systems, are evaluated as a single and distinct construction material regardless of when or how the individual parts or components of those systems are delivered to the construction site. Materials purchased directly by the Government are supplies, not construction material.

Cost of components means--

(1) For components purchased by the Contractor, the acquisition cost, including transportation costs to the place of incorporation into the construction material (whether or not such costs are paid to a domestic firm), and any applicable duty (whether or not a duty-free entry certificate is issued); or

(2) For components manufactured by the Contractor, all costs associated with the manufacture of the component, including transportation costs as described in paragraph (1) of this definition, plus allocable overhead costs, but excluding profit. Cost of components does not include any costs associated with the manufacture of the end product.

Domestic construction material means--

(1) An unmanufactured construction material mined or produced in the United States; or

(2) A construction material manufactured in the United States, if the cost of its components mined, produced, or manufactured in the United States exceeds 50 percent of the cost of all its components. Components of foreign origin of the same class or kind for which nonavailability determinations have been made are treated as domestic.

Foreign construction material means a construction material other than a domestic construction material.

United States means the 50 States, the District of Columbia, and outlying areas.

(b) Domestic preference. (1) This clause implements the Buy American Act (41 U.S.C. 10a-10d) by providing a preference for domestic construction material. The Contractor shall use only domestic construction material in performing this contract, except as provided in paragraphs (b)(2) and (b)(3) of this clause.

(2) This requirement does not apply to the construction material or components listed by the Government as follows: NONE

(3) The Contracting Officer may add other foreign construction material to the list in paragraph (b)(2) of this clause if the Government determines that

(i) The cost of domestic construction material would be unreasonable. The cost of a particular domestic construction material subject to the requirements of the Buy American Act is unreasonable when the cost of such material exceeds the cost of foreign material by more than 6 percent;

(ii) The application of the restriction of the Buy American Act to a particular construction material would be impracticable or inconsistent with the public interest; or

(iii) The construction material is not mined, produced, or manufactured in the United States in sufficient and reasonably available commercial quantities of a satisfactory quality.

(c) Request for determination of inapplicability of the Buy American Act. (1)(i) Any Contractor request to use foreign construction material in accordance with paragraph (b)(3) of this clause shall include adequate information for Government evaluation of the request, including--

(A) A description of the foreign and domestic construction materials;

(B) Unit of measure;

(C) Quantity;

(D) Price;

(E) Time of delivery or availability;

(F) Location of the construction project;

(G) Name and address of the proposed supplier; and

(H) A detailed justification of the reason for use of foreign construction materials cited in accordance with paragraph (b)(3) of this clause.

(ii) A request based on unreasonable cost shall include a reasonable survey of the market and a completed price comparison table in the format in paragraph (d) of this clause.

(iii) The price of construction material shall include all delivery costs to the construction site and any applicable duty (whether or not a duty-free certificate may be issued).

(iv) Any Contractor request for a determination submitted after contract award shall explain why the Contractor could not reasonably foresee the need for such determination and could not have requested the determination before contract award. If the Contractor does not submit a satisfactory explanation, the Contracting Officer need not make a determination.

(2) If the Government determines after contract award that an exception to the Buy American Act applies and the Contracting Officer and the Contractor negotiate adequate consideration, the Contracting Officer will modify the contract to allow use of the foreign construction material. However, when the basis for the exception is the unreasonable price of a domestic construction material, adequate consideration is not less than the differential established in paragraph (b)(3)(i) of this clause.

(3) Unless the Government determines that an exception to the Buy American Act applies, use of foreign construction material is noncompliant with the Buy American Act.

(d) Data. To permit evaluation of requests under paragraph (c) of this clause based on unreasonable cost, the Contractor shall include the following information and any applicable supporting data based on the survey of suppliers:

Foreign and Domestic Construction Materials Price Comparison

Construction material description	Unit of measure	Quantity	Price (dollars) \1\
Item 1			
Foreign construction material....	.....	.....	.....
Domestic construction material...	.....	.....	.....
Item 2			
Foreign construction material....	.....	.....	.....
Domestic construction material...	.....	.....	.....

Include all delivery costs to the construction site and any applicable duty (whether or not a duty-free entry certificate is issued).
List name, address, telephone number, and contact for suppliers surveyed. Attach copy of response; if oral, attach summary.
Include other applicable supporting information.

(End of clause)

52.225-13 RESTRICTIONS ON CERTAIN FOREIGN PURCHASES (JAN 2004)

(a) Except as authorized by the Office of Foreign Assets Control (OFAC) in the Department of the Treasury, the Contractor shall not acquire, for use in the performance of this contract, any supplies or services if any proclamation, Executive order, or statute administered by OFAC, or if OFAC's implementing regulations at 31 CFR chapter V, would prohibit such a transaction by a person subject to the jurisdiction of the United States.

(b) Except as authorized by OFAC, most transactions involving Cuba, Iran, Libya, and Sudan are prohibited, as are most imports from North Korea, into the United States or its outlying areas. Lists of entities and individuals subject to economic sanctions are included in OFAC's List of Specially Designated Nationals and Blocked Persons at TerList1.html. More information about these restrictions, as well as updates, is available in the OFAC's regulations at 31 CFR chapter V and/or on OFAC's Web site at http://www.treas.gov/ofac.

(c) The Contractor shall insert this clause, including this paragraph (c), in all subcontracts.

(End of clause)

52.227-1 AUTHORIZATION AND CONSENT (JUL 1995)

(a) The Government authorizes and consents to all use and manufacture, in performing this contract or any subcontract at any tier, of any invention described in and covered by a United States patent (1) embodied in the structure or composition of any article the delivery of which is accepted by the Government under this contract or (2) used in machinery, tools, or methods whose use necessarily results from compliance by the Contractor or a subcontractor with (i) specifications or written provisions forming a part of this contract or (ii) specific written

instructions given by the Contracting Officer directing the manner of performance. The entire liability to the Government for infringement of a patent of the United States shall be determined solely by the provisions of the indemnity clause, if any, included in this contract or any subcontract hereunder (including any lower-tier subcontract), and the Government assumes liability for all other infringement to the extent of the authorization and consent hereinabove granted.

(b) The Contractor agrees to include, and require inclusion of, this clause, suitably modified to identify the parties, in all subcontracts at any tier for supplies or services (including construction, architect-engineer services, and materials, supplies, models, samples, and design or testing services expected to exceed the simplified acquisition threshold (however, omission of this clause from any subcontract, including those at or below the simplified acquisition threshold, does not affect this authorization and consent.)

(End of clause)

52.227-2 NOTICE AND ASSISTANCE REGARDING PATENT AND COPYRIGHT INFRINGEMENT (AUG 1996)

(a) The Contractor shall report to the Contracting Officer, promptly and in reasonable written detail, each notice or claim of patent or copyright infringement based on the performance of this contract of which the Contractor has knowledge.

(b) In the event of any claim or suit against the Government on account of any alleged patent or copyright infringement arising out of the performance of this contract or out of the use of any supplies furnished or work or services performed under this contract, the Contractor shall furnish to the Government, when requested by the Contracting Officer, all evidence and information in possession of the Contractor pertaining to such suit or claim. Such evidence and information shall be furnished at the expense of the Government except where the Contractor has agreed to indemnify the Government.

(4) The Contractor agrees to include, and require inclusion of, this clause in all subcontracts at any tier for supplies or services (including construction and architect-engineer subcontracts and those for material, supplies, models, samples, or design or testing services) expected to exceed the simplified acquisition threshold at (FAR) 2.101.to exceed the dollar amount set forth in 13.000 of the Federal Acquisition Regulation (FAR).

(End of clause)

52.227-4 PATENT INDEMNITY--CONSTRUCTION CONTRACTS (APR 1984)

Except as otherwise provided, the Contractor agrees to indemnify the Government and its officers, agents, and employees against liability, including costs and expenses, for infringement upon any United States patent (except a patent issued upon an application that is now or may hereafter be withheld from issue pursuant to a Secrecy Order under 35 U.S.C. 181) arising out of performing this contract or out of the use or disposal by or for the account of the Government of supplies furnished or work performed under this contract.

(End of clause)

52.228-2 ADDITIONAL BOND SECURITY (OCT 1997)

The Contractor shall promptly furnish additional security required to protect the Government and persons supplying

labor or materials under this contract if--

(a) Any surety upon any bond, or issuing financial institution for other security, furnished with this contract becomes unacceptable to the Government.

(b) Any surety fails to furnish reports on its financial condition as required by the Government;

(c) The contract price is increased so that the penal sum of any bond becomes inadequate in the opinion of the Contracting Officer; or

(d) An irrevocable letter of credit (ILC) used as security will expire before the end of the period of required security. If the Contractor does not furnish an acceptable extension or replacement ILC, or other acceptable substitute, at least 30 days before an ILC's scheduled expiration, the Contracting officer has the right to immediately draw on the ILC.

(End of clause)

52.228-5 INSURANCE--WORK ON A GOVERNMENT INSTALLATION (JAN 1997)

(a) The Contractor shall, at its own expense, provide and maintain during the entire performance of this contract, at least the kinds and minimum amounts of insurance required in the Schedule or elsewhere in the contract.

(b) Before commencing work under this contract, the Contractor shall notify the Contracting Officer in writing that the required insurance has been obtained. The policies evidencing required insurance shall contain an endorsement to the effect that any cancellation or any material change adversely affecting the Government's interest shall not be effective (1) for such period as the laws of the State in which this contract is to be performed prescribe, or (2) until 30 days after the insurer or the Contractor gives written notice to the Contracting Officer, whichever period is longer.

(c) The Contractor shall insert the substance of this clause, including this paragraph (c), in subcontracts under this contract that require work on a Government installation and shall require subcontractors to provide and maintain the insurance required in the Schedule or elsewhere in the contract. The Contractor shall maintain a copy of all subcontractors' proofs of required insurance, and shall make copies available to the Contracting Officer upon request.

(End of clause)

52.228-11 PLEDGES OF ASSETS (FEB 1992)

(a) Offerors shall obtain from each person acting as an individual surety on a bid guarantee, a performance bond, or a payment bond--

(1) Pledge of assets; and

(2) Standard Form 28, Affidavit of Individual Surety.

(b) Pledges of assets from each person acting as an individual surety shall be in the form of--

(1) Evidence of an escrow account containing cash, certificates of deposit, commercial or Government securities, or other assets described in FAR 28.203-2 (except see 28.203-2(b)(2) with respect to Government securities held in book entry form) and/or;

(2) A recorded lien on real estate. The offeror will be required to provide--

(i) Evidence of title in the form of a certificate of title prepared by a title insurance company approved by the United States Department of Justice. This title evidence must show fee simple title vested in the surety along with any concurrent owners; whether any real estate taxes are due and payable; and any recorded encumbrances against the property, including the lien filed in favor of the Government as required by FAR 28.203-3(d);

(ii) Evidence of the amount due under any encumbrance shown in the evidence of title;

(iii) A copy of the current real estate tax assessment of the property or a current appraisal dated no earlier than 6 months prior to the date of the bond, prepared by a professional appraiser who certifies that the appraisal has been conducted in accordance with the generally accepted appraisal standards as reflected in the Uniform Standards of Professional Appraisal Practice, as promulgated by the Appraisal Foundation.

(End of clause)

52.228-12 PROSPECTIVE SUBCONTRACTOR REQUESTS FOR BONDS. (OCT 1995)

In accordance with Section 806(a)(3) of Pub. L. 102-190, as amended by Sections 2091 and 8105 of Pub. L. 103-355, upon the request of a prospective subcontractor or supplier offering to furnish labor or material for the performance of this contract for which a payment bond has been furnished to the Government pursuant to the Miller Act, the Contractor shall promptly provide a copy of such payment bond to the requester.

(End of clause)

52.228-14 IRREVOCABLE LETTER OF CREDIT (DEC 1999)

(a) “Irrevocable letter of credit” (ILC), as used in this clause, means a written commitment by a federally insured financial institution to pay all or part of a stated amount of money, until the expiration date of the letter, upon presentation by the Government (the beneficiary) of a written demand therefor. Neither the financial institution nor the offeror/Contractor can revoke or condition the letter of credit.

(b) If the offeror intends to use an ILC in lieu of a bid bond, or to secure other types of bonds such as performance and payment bonds, the letter of credit and letter of confirmation formats in paragraphs (e) and (f) of this clause shall be used.

(c) The letter of credit shall be irrevocable, shall require presentation of no document other than a written demand and the ILC (including confirming letter, if any), shall be issued/confirmed by an acceptable federally insured financial institution as provided in paragraph (d) of this clause, and--

(1) If used as a bid guarantee, the ILC shall expire no earlier than 60 days after the close of the bid acceptance period;

(2) If used as an alternative to corporate or individual sureties as security for a performance or payment bond, the offeror/Contractor may submit an ILC with an initial expiration date estimated to cover the entire period for which financial security is required or may submit an ILC with an initial expiration date that is a minimum period of one year from the date of issuance. The ILC shall provide that, unless the issuer provides the beneficiary written notice of non-renewal at least 60 days in advance of the current expiration date, the ILC is automatically extended without amendment for one year from the expiration date, or any future expiration date, until the period of required coverage is completed and the Contracting Officer provides the financial institution with a written statement

waiving the right to payment. The period of required coverage shall be:

(i) For contracts subject to the Miller Act, the later of--

(A) One year following the expected date of final payment;

(B) For performance bonds only, until completion of any warranty period; or

(C) For payment bonds only, until resolution of all claims filed against the payment bond during the one-year period following final payment.

(ii) For contracts not subject to the Miller Act, the later of--

(A) 90 days following final payment; or

(B) For performance bonds only, until completion of any warranty period.

(d) Only federally insured financial institutions rated investment grade or higher shall issue or confirm the ILC. The offeror/Contractor shall provide the Contracting Officer a credit rating that indicates the financial institution has the required rating(s) as of the date of issuance of the ILC. Unless the financial institution issuing the ILC had letter of credit business of less than $25 million in the past year, ILCs over $5 million must be confirmed by another acceptable financial institution that had letter of credit business of less than $25 million in the past year.

(e) The following format shall be used by the issuing financial institution to create an ILC:

_____

[Issuing Financial Institution's Letterhead or Name and Address]

Issue Date _____

IRREVOCABLE LETTER OF CREDIT NO. _____

Account party's name _____

Account party's address _____

For Solicitation No. _____(for reference only)

TO: [U.S. Government agency]

[U.S. Government agency's address]

1. We hereby establish this irrevocable and transferable Letter of Credit in your favor for one or more drawings up to United States $_____. This Letter of Credit is payable at [issuing financial institution's and, if any, confirming financial institution's] office at [issuing financial institution's address and, if any, confirming financial institution's address] and expires with our close of business on _____, or any automatically extended expiration date.

2. We hereby undertake to honor your or the transferee's sight draft(s) drawn on the issuing or, if any, the confirming financial institution, for all or any part of this credit if presented with this Letter of Credit and confirmation, if any, at the office specified in paragraph 1 of this Letter of Credit on or before the expiration date or any automatically extended expiration date.

3. [This paragraph is omitted if used as a bid guarantee, and subsequent paragraphs are renumbered.] It is a

condition of this Letter of Credit that it is deemed to be automatically extended without amendment for one year from the expiration date hereof, or any future expiration date, unless at least 60 days prior to any expiration date, we notify you or the transferee by registered mail, or other receipted means of delivery, that we elect not to consider this Letter of Credit renewed for any such additional period. At the time we notify you, we also agree to notify the account party (and confirming financial institution, if any) by the same means of delivery.

4. This Letter of Credit is transferable. Transfers and assignments of proceeds are to be effected without charge to either the beneficiary or the transferee/assignee of proceeds. Such transfer or assignment shall be only at the written direction of the Government (the beneficiary) in a form satisfactory to the issuing financial institution and the confirming financial institution, if any.

5. This Letter of Credit is subject to the Uniform Customs and Practice (UCP) for Documentary Credits, 1993 Revision, International Chamber of Commerce Publication No. 500, and to the extent not inconsistent therewith, to the laws of _____ [state of confirming financial institution, if any, otherwise state of issuing financial institution].

6. If this credit expires during an interruption of business of this financial institution as described in Article 17 of the UCP, the financial institution specifically agrees to effect payment if this credit is drawn against within 30 days after the resumption of our business.

Sincerely,

_____

[Issuing financial institution]

(f) The following format shall be used by the financial institution to confirm an ILC:

_____
[Confirming Financial Institution's Letterhead or Name and Address]

(Date) _____

Our Letter of Credit Advice Number _____

Beneficiary: _____ [U.S. Government agency]

Issuing Financial Institution: _____

Issuing Financial Institution's LC No.: _____

Gentlemen:

1. We hereby confirm the above indicated Letter of Credit, the original of which is attached, issued by _____ [name of issuing financial institution] for drawings of up to United States dollars _____/U.S. $_____ and expiring with our close of business on _____ [the expiration date], or any automatically extended expiration date.

2. Draft(s) drawn under the Letter of Credit and this Confirmation are payable at our office located at _____.

3. We hereby undertake to honor sight draft(s) drawn under and presented with the Letter of Credit and this Confirmation at our offices as specified herein.

4. [This paragraph is omitted if used as a bid guarantee, and subsequent paragraphs are renumbered.] It is a condition of this confirmation that it be deemed automatically extended without amendment for one year from the expiration date hereof, or any automatically extended expiration date, unless:

(a) At least 60 days prior to any such expiration date, we shall notify the Contracting Officer, or the transferee and the issuing financial institution, by registered mail or other receipted means of delivery, that we elect not to consider this confirmation extended for any such additional period; or

(b) The issuing financial institution shall have exercised its right to notify you or the transferee, the account party, and ourselves, of its election not to extend the expiration date of the Letter of Credit.

5. This confirmation is subject to the Uniform Customs and Practice (UCP) for Documentary Credits, 1993 Revision, International Chamber of Commerce Publication No. 500, and to the extent not inconsistent therewith, to the laws of _____ [state of confirming financial institution].

6. If this confirmation expires during an interruption of business of this financial institution as described in Article 17 of the UCP, we specifically agree to effect payment if this credit is drawn against within 30 days after the resumption of our business.

Sincerely,

_____

[Confirming financial institution]

(g) The following format shall be used by the Contracting Officer for a sight draft to draw on the Letter of Credit:

SIGHT DRAFT

_____

[City, State]

(Date) _____

[Name and address of financial institution]

Pay to the order of _____ [Beneficiary Agency] _____ the sum of United States $_____.
This draft is drawn under Irrevocable Letter of Credit No. _____.

_____

[Beneficiary Agency]

By: _____

(End of clause)

52.228-15 PERFORMANCE AND PAYMENT BONDS--CONSTRUCTION (JUL 2000)-

(a) Definitions. As used in this clause--

Original contract price means the award price of the contract; or, for requirements contracts, the price payable for the estimated total quantity; or, for indefinite-quantity contracts, the price payable for the specified minimum quantity. Original contract price does not include the price of any options, except those options exercised at the time of contract award.

(b) Amount of required bonds. Unless the resulting contract price is $100,000 or less, the successful offeror shall furnish performance and payment bonds to the Contracting Officer as follows:

(1) Performance bonds (Standard Form 25). The penal amount of performance bonds at the time of contract award shall be 100 percent of the original contract price.

(2) Payment Bonds (Standard Form 25-A). The penal amount of payment bonds at the time of contract award shall be 100 percent of the original contract price.

(3) Additional bond protection. (i) The Government may require additional performance and payment bond protection if the contract price is increased. The increase in protection generally will equal 100 percent of the increase in contract price.

(ii) The Government may secure the additional protection by directing the Contractor to increase the penal amount of the existing bond or to obtain an additional bond.

(c) Furnishing executed bonds. The Contractor shall furnish all executed bonds, including any necessary reinsurance agreements, to the Contracting Officer, within the time period specified in the Bid Guarantee provision of the solicitation, or otherwise specified by the Contracting Officer, but in any event, before starting work.

(d) Surety or other security for bonds. The bonds shall be in the form of firm commitment, supported by corporate sureties whose names appear on the list contained in Treasury Department Circular 570, individual sureties, or by other acceptable security such as postal money order, certified check, cashier's check, irrevocable letter of credit, or, in accordance with Treasury Department regulations, certain bonds or notes of the United States. Treasury Circular 570 is published in the Federal Register or may be obtained from the U.S. Department of Treasury, Financial Management Service, Surety Bond Branch, 401 14th Street, NW, 2nd Floor, West Wing, Washington, DC 20227.

(e) Notice of subcontractor waiver of protection (40 U.S.C. 270b(c). Any waiver of the right to sue on the payment bond is void unless it is in writing, signed by the person whose right is waived, and executed after such person has first furnished labor or material for use in the performance of the contract.

(End of clause)

52.229-3 FEDERAL, STATE, AND LOCAL TAXES (APR 2003)

(a) As used in this clause--

"Contract date" means the date set for bid opening or, if this is a negotiated contract or a modification, the effective date of this contract or modification.

"All applicable Federal, State, and local taxes and duties" means all taxes and duties, in effect on the contract date, that the taxing authority is imposing and collecting on the transactions or property covered by this contract.

"After-imposed Federal tax" means any new or increased Federal excise tax or duty, or tax that was exempted or excluded on the contract date but whose exemption was later revoked or reduced during the contract period, on the transactions or property covered by this contract that the Contractor is required to pay or bear as the result of legislative, judicial, or administrative action taking effect after the contract date. It does not include social security

tax or other employment taxes.

"After-relieved Federal tax" means any amount of Federal excise tax or duty, except social security or other employment taxes, that would otherwise have been payable on the transactions or property covered by this contract, but which the Contractor is not required to pay or bear, or for which the Contractor obtains a refund or drawback, as the result of legislative, judicial, or administrative action taking effect after the contract date.

Local taxes includes taxes imposed by a possession or territory of the United States, Puerto Rico, or the Northern Mariana Islands, if the contract is performed wholly or partly in any of those areas.

(b) The contract price includes all applicable Federal, State, and local taxes and duties.

(c) The contract price shall be increased by the amount of any after-imposed Federal tax, provided the Contractor warrants in writing that no amount for such newly imposed Federal excise tax or duty or rate increase was included in the contract price, as a contingency reserve or otherwise.

(d) The contract price shall be decreased by the amount of any after-relieved Federal tax.

(e) The contract price shall be decreased by the amount of any Federal excise tax or duty, except social security or other employment taxes, that the Contractor is required to pay or bear, or does not obtain a refund of, through the Contractor's fault, negligence, or failure to follow instructions of the Contracting Officer.

(f) No adjustment shall be made in the contract price under this clause unless the amount of the adjustment exceeds $250.

(g) The Contractor shall promptly notify the Contracting Officer of all matters relating to any Federal excise tax or duty that reasonably may be expected to result in either an increase or decrease in the contract price and shall take appropriate action as the Contracting Officer directs.

(h) The Government shall, without liability, furnish evidence appropriate to establish exemption from any Federal, State, or local tax when the Contractor requests such evidence and a reasonable basis exists to sustain the exemption.

(End of clause)

52.231-5000 EQUIPMENT OWNERSHIP AND OPERATING EXPENSE SCHEDULE
MAR 1995)--EFARS

(a) This clause does not apply to terminations. See 52.249-5000, Basis for Settlement of Proposals and FAR Part 49.

(b) Allowable cost for construction and marine plant and equipment in sound workable condition owned or controlled and furnished by a contractor or subcontractor at any tier shall be based on actual cost data for each piece of equipment or groups of similar serial and series for which the Government can determine both ownership and operating costs from the contractor's accounting records. When both ownership and operating costs cannot be determined for any piece of equipment or groups of similar serial or series equipment from the contractor's accounting records, costs for that equipment shall be based upon the applicable provisions of EP 1110-1-8, Construction Equipment Ownership and Operating Expense Schedule, Region III. Working conditions shall be considered to be average for determining equipment rates using the schedule unless specified otherwise by the contracting officer. For equipment not included in the schedule, rates for comparable pieces of equipment may be used or a rate may be developed using the formula provided in the schedule. For forward pricing, the schedule in effect at the time of negotiations shall apply. For retroactive pricing, the schedule in effect at the time the work was performed shall apply.

(c) Equipment rental costs are allowable, subject to the provisions of FAR 31.105(d)(ii) and FAR 31.205-36. Rates for equipment rented from an organization under common control, lease-purchase arrangements, and sale-leaseback arrangements, will be determined using the schedule, except that actual rates will be used for equipment leased from an organization under common control that has an established practice of leasing the same or similar equipment to unaffiliated lessees.

(d) When actual equipment costs are proposed and the total amount of the pricing action exceeds the small purchase threshold, the contracting officer shall request the contractor to submit either certified cost or pricing data, or partial/limited data, as appropriate. The data shall be submitted on Standard Form 1411, Contract Pricing Proposal Cover Sheet.

(End of clause)

52.232-5 PAYMENTS UNDER FIXED-PRICE CONSTRUCTION CONTRACTS (SEP 2002)

(a) Payment of price. The Government shall pay the Contractor the contract price as provided in this contract.

(b) Progress payments. The Government shall make progress payments monthly as the work proceeds, or at more frequent intervals as determined by the Contracting Officer, on estimates of work accomplished which meets the standards of quality established under the contract, as approved by the Contracting Officer.

(1) The Contractor's request for progress payments shall include the following substantiation:

(i) An itemization of the amounts requested, related to the various elements of work required by the contract covered by the payment requested.

(ii) A listing of the amount included for work performed by each subcontractor under the contract.

(iii) A listing of the total amount of each subcontract under the contract.

(iv) A listing of the amounts previously paid to each such subcontractor under the contract.

(v) Additional supporting data in a form and detail required by the Contracting Officer.

(2) In the preparation of estimates, the Contracting Officer may authorize material delivered on the site and preparatory work done to be taken into consideration. Material delivered to the Contractor at locations other than the site also may be taken into consideration if--

(i) Consideration is specifically authorized by this contract; and

(ii) The Contractor furnishes satisfactory evidence that it has acquired title to such material and that the material will be used to perform this contract.

(c) Contractor certification. Along with each request for progress payments, the Contractor shall furnish the following certification, or payment shall not be made: (However, if the Contractor elects to delete paragraph (c)(4) from the certification, the certification is still acceptable.)

I hereby certify, to the best of my knowledge and belief, that--

(1) The amounts requested are only for performance in accordance with the specifications, terms, and conditions of the contract;

(2) All payments due to subcontractors and suppliers from previous payments received under the contract have been made, and timely payments will be made from the proceeds of the payment covered by this certification, in

accordance with subcontract agreements and the requirements of chapter 39 of Title 31, United States Code;

(3) This request for progress payments does not include any amounts which the prime contractor intends to withhold or retain from a subcontractor or supplier in accordance with the terms and conditions of the subcontract; and

(4) This certification is not to be construed as final acceptance of a subcontractor's performance.

_____

(Name)

_____

(Title)

_____

(Date)

(d) Refund of unearned amounts. If the Contractor, after making a certified request for progress payments, discovers that a portion or all of such request constitutes a payment for performance by the Contractor that fails to conform to the specifications, terms, and conditions of this contract (hereinafter referred to as the "unearned amount"), the Contractor shall--

(1) Notify the Contracting Officer of such performance deficiency; and

(2) Be obligated to pay the Government an amount (computed by the Contracting Officer in the manner provided in paragraph (j) of this clause) equal to interest on the unearned amount from the 8th day after the date of receipt of the unearned amount until--

(i) The date the Contractor notifies the Contracting Officer that the performance deficiency has been corrected; or

(ii) The date the Contractor reduces the amount of any subsequent certified request for progress payments by an amount equal to the unearned amount.

(e) Retainage. If the Contracting Officer finds that satisfactory progress was achieved during any period for which a progress payment is to be made, the Contracting Officer shall authorize payment to be made in full. However, if satisfactory progress has not been made, the Contracting Officer may retain a maximum of 10 percent of the amount of the payment until satisfactory progress is achieved. When the work is substantially complete, the Contracting Officer may retain from previously withheld funds and future progress payments that amount the Contracting Officer considers adequate for protection of the Government and shall release to the Contractor all the remaining withheld funds. Also, on completion and acceptance of each separate building, public work, or other division of the contract, for which the price is stated separately in the contract, payment shall be made for the completed work without retention of a percentage.

(f) Title, liability, and reservation of rights. All material and work covered by progress payments made shall, at the time of payment, become the sole property of the Government, but this shall not be construed as--

(1) Relieving the Contractor from the sole responsibility for all material and work upon which payments have been made or the restoration of any damaged work; or

(2) Waiving the right of the Government to require the fulfillment of all of the terms of the contract.

(g) Reimbursement for bond premiums. In making these progress payments, the Government shall, upon request,

reimburse the Contractor for the amount of premiums paid for performance and payment bonds (including coinsurance and reinsurance agreements, when applicable) after the Contractor has furnished evidence of full payment to the surety. The retainage provisions in paragraph (e) of this clause shall not apply to that portion of progress payments attributable to bond premiums.

(h) Final payment. The Government shall pay the amount due the Contractor under this contract after--

(1) Completion and acceptance of all work;

(2) Presentation of a properly executed voucher; and

(3) Presentation of release of all claims against
the Government arising by virtue of this contract, other than claims, in stated amounts, that the Contractor has specifically excepted from the operation of the release. A release may also be required of the assignee if the Contractor's claim to amounts payable under this contract has been assigned under the Assignment of Claims Act of 1940 (31 U.S.C. 3727 and 41 U.S.C. 15).

(i) Limitation because of undefinitized work. Notwithstanding any provision of this contract, progress payments shall not exceed 80 percent on work accomplished on undefinitized contract actions. A "contract action" is any action resulting in a contract, as defined in FAR Subpart 2.1, including contract modifications for additional supplies or services, but not including contract modifications that are within the scope and under the terms of the contract, such as contract modifications issued pursuant to the Changes clause, or funding and other administrative changes.

(j) Interest computation on unearned amounts. In accordance with 31 U.S.C. 3903(c)(1), the amount payable under subparagraph (d)(2) of this clause shall be--

(1) Computed at the rate of average bond equivalent rates of 91-day Treasury bills auctioned at the most recent auction of such bills prior to the date the Contractor receives the unearned amount; and

(2) Deducted from the next available payment to the Contractor.

(End of clause)

52.232-13 NOTICE OF PROGRESS PAYMENTS (APR 1984)

The need for customary progress payments conforming to the regulations in Subpart 32.5 of the Federal Acquisition Regulation (FAR) will not be considered as a handicap or adverse factor in the award of the contract. The Progress Payments clause included in this solicitation will be included in any resulting contract, modified or altered if necessary in accordance with subsection 52.232-16 and its Alternate I of the FAR. Even though the clause is included in the contract, the clause shall be inoperative during any time the contractor's accounting system and controls are determined by the Government to be inadequate for segregation and accumulation of contract costs.

(End of clause)

52.232-16 PROGRESS PAYMENTS (APR 2003)

The Government will make progress payments to the Contractor when requested as work progresses, but not more frequently than monthly, in amounts of $2,500 or more approved by the Contracting Officer, under the following conditions:

(a) Computation of amounts. (1) Unless the Contractor requests a smaller amount, the Government will compute each progress payment as 80 percent of the Contractor's total costs incurred under this contract whether or not actually paid, plus financing payments to subcontractors (see paragraph (j) of this clause), less the sum of all previous progress payments made by the Government under this contract. The Contracting Officer will consider cost of money that would be allowable under FAR 31.205-10 as an incurred cost for progress payment purposes.

(2) The amount of financing and other payments for supplies and services purchased directly for the contract are limited to the amounts that have been paid by cash, check, or other forms of payment, or that are determined due and will be paid to subcontractors--

(i) In accordance with the terms and conditions of a subcontract or invoice; and

(ii) Ordinarily within 30 days of the submission of the Contractor's payment request to the Government.

(3) The Government will exclude accrued costs of Contractor contributions under employee pension plans until actually paid unless--

(i) The Contractor's practice is to make contributions to the retirement fund quarterly or more frequently; and

(ii) The contribution does not remain unpaid 30 days after the end of the applicable quarter or shorter payment period (any contribution remaining unpaid shall be excluded from the Contractor's total costs for progress payments until paid).

(4) The Contractor shall not include the following in total costs for progress payment purposes in paragraph (a)(1) of this clause:

(i) Costs that are not reasonable, allocable to this contract, and consistent with sound and generally accepted accounting principles and practices.

(ii) Costs incurred by subcontractors or suppliers.

(iii) Costs ordinarily capitalized and subject to depreciation or amortization except for the properly depreciated or amortized portion of such costs.

(iv) Payments made or amounts payable to subcontractors or suppliers, except for --

(A) completed work, including partial deliveries, to which the Contractor has acquired title; and

(B) Work under cost-reimbursement or time-and-material subcontracts to which the Contractor has acquired title.

(5) The amount of unliquidated progress payments may exceed neither (i) the progress payments made against incomplete work (including allowable unliquidated progress payments to subcontractors) nor

(ii) the value, for progress payment purposes, of the incomplete work. Incomplete work shall be considered to be the supplies and services required by this contract, for which delivery and invoicing by the Contractor and acceptance by the Government are incomplete.

(6) The total amount of progress payments shall not exceed 80 percent of the total contract price.

(7) If a progress payment or the unliquidated progress payments exceed the amounts permitted by subparagraphs (a)(4) or (a)(5) above, the Contractor shall repay the amount of such excess to the Government on demand.

(8) Notwithstanding any other terms of the contract, the Contractor agrees not to request progress payments in dollar amounts of less than $2,500. The Contracting Officer may make exceptions.

(b) Liquidation. Except as provided in the Termination for Convenience of the Government clause, all progress payments shall be liquidated by deducting from any payment under this contract, other than advance or progress payments, the unliquidated progress payments, or 80 percent of the amount invoiced, whichever is less. The Contractor shall repay to the Government any amounts required by a retroactive price reduction, after computing liquidations and payments on past invoices at the reduced prices and adjusting the unliquidated progress payments accordingly. The Government reserves the right to unilaterally change from the ordinary liquidation rate to an alternate rate when deemed appropriate for proper contract financing.

(c) Reduction or suspension. The Contracting Officer may reduce or suspend progress payments, increase the rate of liquidation, or take a combination of these actions, after finding on substantial evidence any of the following conditions:

(1) The Contractor failed to comply with any material requirement of this contract (which includes paragraphs (f) and (g) below).

(2) Performance of this contract is endangered by the Contractor's

(i) failure to make progress or

(ii) unsatisfactory financial condition.

(3) Inventory allocated to this contract substantially exceeds reasonable requirements.

(4) The Contractor is delinquent in payment of the costs of performing this contract in the ordinary course of business.

(5) The unliquidated progress payments exceed the fair value of the work accomplished on the undelivered portion of this contract.

(6) The Contractor is realizing less profit than that reflected in the establishment of any alternate liquidation rate in paragraph (b) above, and that rate is less than the progress payment rate stated in subparagraph (a)(1) above.

(d) Title.

(1) Title to the property described in this paragraph (d) shall vest in the Government. Vestiture shall be immediately upon the date of this contract, for property acquired or produced before that date. Otherwise, vestiture shall occur when the property is or should have been allocable or properly chargeable to this contract.

(2) "Property," as used in this clause, includes all of the below-described items acquired or produced by the Contractor that are or should be allocable or properly chargeable to this contract under sound and generally accepted accounting principles and practices.

(i) Parts, materials, inventories, and work in process;

(ii) Special tooling and special test equipment to which the Government is to acquire title under any other clause of this contract;

(iii) Nondurable (i.e., noncapital) tools, jigs, dies, fixtures, molds, patterns, taps, gauges, test equipment, and other similar manufacturing aids, title to which would not be obtained as special tooling under subparagraph (ii) above; and

(iv) Drawings and technical data, to the extent the Contractor or subcontractors are required to deliver them to the Government by other clauses of this contract.

(3) Although title to property is in the Government under this clause, other applicable clauses of this contract; e.g., the termination or special tooling clauses, shall determine the handling and disposition of the property.

(4) The Contractor may sell any scrap resulting from production under this contract without requesting the Contracting Officer's approval, but the proceeds shall be credited against the costs of performance.

(5) To acquire for its own use or dispose of property to which title is vested in the Government under this clause, the Contractor must obtain the Contracting Officer's advance approval of the action and the terms. The Contractor shall (i) exclude the allocable costs of the property from the costs of contract performance, and (ii) repay to the Government any amount of unliquidated progress payments allocable to the property. Repayment may be by cash or credit memorandum.

(6) When the Contractor completes all of the obligations under this contract, including liquidation of all progress payments, title shall vest in the Contractor for all property (or the proceeds thereof) not--

(i) Delivered to, and accepted by, the Government under this contract; or

(ii) Incorporated in supplies delivered to, and accepted by, the Government under this contract and to which title is vested in the Government under this clause.

(7) The terms of this contract concerning liability for Government-furnished property shall not apply to property to which the Government acquired title solely under this clause.

(e) Risk of loss. Before delivery to and acceptance by the Government, the Contractor shall bear the risk of loss for property, the title to which vests in the Government under this clause, except to the extent the Government expressly assumes the risk. The Contractor shall repay the Government an amount equal to the unliquidated progress payments that are based on costs allocable to property that is damaged, lost, stolen, or destroyed.

(f) Control of costs and property. The Contractor shall maintain an accounting system and controls adequate for the proper administration of this clause.

(g) Reports and access to records. The Contractor shall promptly furnish reports, certificates, financial statements, and other pertinent information reasonably requested by the Contracting Officer for the administration of this clause. Also, the Contractor shall give the Government reasonable opportunity to examine and verify the Contractor's books, records, and accounts.

(h) Special terms regarding default. If this contract is terminated under the Default clause, (i) the Contractor shall, on demand, repay to the Government the amount of unliquidated progress payments and (ii) title shall vest in the Contractor, on full liquidation of progress payments, for all property for which the Government elects not to require delivery under the Default clause. The Government shall be liable for no payment except as provided by the Default clause.

(i) Reservations of rights. (1) No payment or vesting of title under this clause shall (i) excuse the Contractor from performance of obligations under this contract or (ii) constitute a waiver of any of the rights or remedies of the parties under the contract.

(2) The Government's rights and remedies under this clause

(i) Shall not be exclusive but rather shall be in addition to any other rights and remedies provided by law or this contract and

(ii) Shall not be affected by delayed, partial, or omitted exercise of any right, remedy, power, or privilege, nor shall such exercise or any single exercise preclude or impair any further exercise under this clause or the exercise of any other right, power, or privilege of the Government.

(j) Financing payments to subcontractors. The financing payments to subcontractors mentioned in paragraphs (a)(1) and (a)(2) of this clause shall be all financing payments to subcontractors or divisions, if the following conditions are met:

(1) The amounts included are limited to--

(i) The unliquidated remainder of financing payments made; plus

(ii) Any unpaid subcontractor requests for financing payments.

(2) The subcontract or interdivisional order is expected to involve a minimum of approximately 6 months between the beginning of work and the first delivery; or, if the subcontractor is a small business concern, 4 months.

(3) If the financing payments are in the form of progress payments, the terms of the subcontract or interdivisional order concerning progress payments--

(i) Are substantially similar to the terms of this clause for any subcontractor that is a large business concern, or this clause with its Alternate I for any subcontractor that is a small business concern;

(ii) Are at least as favorable to the Government as the terms of this clause;

(iii) Are not more favorable to the subcontractor or division than the terms of this clause are to the Contractor;

(iv) Are in conformance with the requirements of FAR 32.504(e); and

(v) Subordinate all subcontractor rights concerning property to which the Government has title under the subcontract to the Government's right to require delivery of the property to the Government if--

(A) The Contractor defaults; or

(B) The subcontractor becomes bankrupt or insolvent.

(4) If the financing payments are in the form of performance-based payments, the terms of the subcontract or interdivisional order concerning payments--

(i) Are substantially similar to the Performance-Based Payments clause at FAR 52.232-32 and meet the criteria for, and definition of, performance-based payments in FAR Part 32;

(ii) Are in conformance with the requirements of FAR 32.504(f); and

(iii) Subordinate all subcontractor rights concerning property to which the Government has title under the subcontract to the Government's right to require delivery of the property to the Government if--

(A) The Contractor defaults; or

(B) The subcontractor becomes bankrupt or insolvent.

(5) If the financing payments are in the form of commercial item financing payments, the terms of the subcontract or interdivisional order concerning payments--

(i) Are constructed in accordance with FAR 32.206(c) and included in a subcontract for a commercial item purchase that meets the definition and standards for acquisition of commercial items in FAR Parts 2 and 12;

(ii) Are in conformance with the requirements of FAR 32.504(g); and

(iii) Subordinate all subcontractor rights concerning property to which the Government has title under the subcontract to the Government's right to require delivery of the property to the Government if--

(A) The Contractor defaults; or

(B) The subcontractor becomes bankrupt or insolvent.

(6) If financing is in the form of progress payments, the progress payment rate in the subcontract is the customary rate used by the contracting agency, depending on whether the subcontractor is or is not a small business concern.

(7) Concerning any proceeds received by the Government for property to which title has vested in the Government under the subcontract terms, the parties agree that the proceeds shall be applied to reducing any unliquidated financing payments by the Government to the Contractor under this contract.

(8) If no unliquidated financing payments to the Contractor remain, but there are unliquidated financing payments that the Contractor has made to any subcontractor, the Contractor shall be subrogated to all the rights the Government obtained through the terms required by this clause to be in any subcontract, as if all such rights had been assigned and transferred to the Contractor.

(9) To facilitate small business participation in subcontracting under this contract, the Contractor shall provide financing payments to small business concerns, in conformity with the standards for customary contract financing payments stated in Subpart 32.113. The Contractor shall not consider the need for such financing payments as a handicap or adverse factor in the award of subcontracts.

(k) Limitations on undefinitized contract actions. Notwithstanding any other progress payment provisions in this contract, progress payments may not exceed 80 percent of costs incurred on work accomplished under undefinitized contract actions. A "contract action" is any action resulting in a contract, as defined in Subpart 2.1, including contract modifications for additional supplies or services, but not including contract modifications that are within the scope and under the terms of the contract, such as contract modifications issued pursuant to the Changes clause, or funding and other administrative changes. This limitation shall apply to the costs incurred, as computed in accordance with paragraph (a) of this clause, and shall remain in effect until the contract action is definitized. Costs incurred which are subject to this limitation shall be segregated on Contractor progress payment requests and invoices from those costs eligible for higher progress payment rates. For purposes of progress payment liquidation, as described in paragraph (b) of this clause, progress payments for undefinitized contract actions shall be liquidated at 80 percent of the amount invoiced for work performed under the undefinitized contract action as long as the contract action remains undefinitized. The amount of unliquidated progress payments for undefinitized contract actions shall not exceed 80 percent of the maximum liability of the Government under the undefinitized contract action or such lower limit specified elsewhere in the contract. Separate limits may be specified for separate actions.

(l) Due date. The designated payment office will make progress payments on the 30th day after the designated billing office receives a proper progress payment request. In the event that the Government requires an audit or other review of a specific progress payment request to ensure compliance with the terms and conditions of the contract, the designated payment office is not compelled to make payment by the specified due date. Progress payments are considered contract financing and are not subject to the interest penalty provisions of the Prompt Payment Act.

(m) Progress payments under indefinite--delivery contracts. The Contractor shall account for and submit progress payment requests under individual orders as if the order constituted a separate contract, unless otherwise specified in this contract.

(End of clause)

52.232-17 INTEREST (JUNE 1996)

(a) Except as otherwise provided in this contract under a Price Reduction for Defective Cost or Pricing Data clause or a Cost Accounting Standards clause, all amounts that become payable by the Contractor to the Government under this contract (net of any applicable tax credit under the Internal Revenue Code (26 U.S.C. 1481)) shall bear simple interest from the date due until paid unless paid within 30 days of becoming due. The interest rate shall be the interest rate established by the Secretary of the Treasury as provided in Section 12 of the Contract Disputes Act of 1978 (Public Law 95-563), which is applicable to the period in which the amount becomes due, as provided in paragraph (b) of this clause, and then at the rate applicable for each six-month period as fixed by the Secretary until the amount is paid. reproduce, prepare derivative works, distribute copies to the public, and (b) Amounts shall be due at the earliest of the following dates:

(1) The date fixed under this contract.

(2) The date of the first written demand for payment consistent with this contract, including any demand resulting from a default termination.

(3) The date the Government transmits to the Contractor a proposed supplemental agreement to confirm completed negotiations establishing the amount of debt.

(4) If this contract provides for revision of prices, the date of written notice to the Contractor stating the amount of refund payable in connection with a pricing proposal or a negotiated pricing agreement not confirmed by contract modification.

(c) The interest charge made under this clause may be reduced under the procedures prescribed in 32.614-2 of the Federal Acquisition Regulation in effect on the date of this contract.

(End of clause)

52.232-23 ASSIGNMENT OF CLAIMS (JAN 1986)

(a) The Contractor, under the Assignment of Claims Act, as amended, 31 U.S.C. 3727, 41 U.S.C. 15 (hereafter referred to as "the Act"), may assign its rights to be paid amounts due or to become due as a result of the performance of this contract to a bank, trust company, or other financing institution, including any Federal lending agency. The assignee under such an assignment may thereafter further assign or reassign its right under the original assignment to any type of financing institution described in the preceding sentence.

(b) Any assignment or reassignment authorized under the Act and this clause shall cover all unpaid amounts payable under this contract, and shall not be made to more than one party, except that an assignment or reassignment may be made to one party as agent or trustee for two or more parties participating in the financing of this contract.

(c) The Contractor shall not furnish or disclose to any assignee under this contract any classified document (including this contract) or information related to work under this contract until the Contracting Officer authorizes such action in writing.

(End of clause)

52.232-27 PROMPT PAYMENT FOR CONSTRUCTION CONTRACTS (OCT 2003)

Notwithstanding any other payment terms in this contract, the Government will make invoice payments under the terms and conditions specified in this clause. The Government considers payment as being made on the day a check is dated or the date of an electronic funds transfer. Definitions of pertinent terms are set forth in sections 2.101, 32.001, and 32.902 of the Federal Acquisition Regulation. All days referred to in this clause are calendar days, unless otherwise specified. (However, see paragraph (a)(3) concerning payments due on Saturdays, Sundays, and legal holidays.)

(a) Invoice payments--(1) Types of invoice payments. For purposes of this clause, there are several types of invoice payments that may occur under this contract, as follows:

(i) Progress payments, if provided for elsewhere in this contract, based on Contracting Officer approval of the estimated amount and value of work or services performed, including payments for reaching milestones in any project.

(A) The due date for making such payments is 14 days after the designated billing office receives a proper payment request. If the designated billing office fails to annotate the payment request with the actual date of receipt at the time of receipt, the payment due date is the 14th day after the date of the Contractor's payment request, provided the designated billing office receives a proper payment request and there is no disagreement over quantity, quality, or Contractor compliance with contract requirements.

(B) The due date for payment of any amounts retained by the Contracting Officer in accordance with the clause at 52.232-5, Payments Under Fixed-Price Construction Contracts, is as specified in the contract or, if not specified, 30 days after approval by the Contracting Officer for release to the Contractor.

(ii) Final payments based on completion and acceptance of all work and presentation of release of all claims against the Government arising by virtue of the contract, and payments for partial deliveries that have been accepted by the Government (e.g., each separate building, public work, or other division of the contract for which the price is stated separately in the contract).

(A) The due date for making such payments is the later of the following two events:

(1) The 30th day after the designated billing office receives a proper invoice from the Contractor.

(2) The 30th day after Government acceptance of the work or services completed by the Contractor. For a final invoice when the payment amount is subject to contract settlement actions (e.g., release of claims), acceptance is deemed to occur on the effective date of the contract settlement.

(B) If the designated billing office fails to annotate the invoice with the date of actual receipt at the time of receipt, the invoice payment due date is the 30th day after the date of the Contractor's invoice, provided the designated billing office receives a proper invoice and there is no disagreement over quantity, quality, or Contractor compliance with contract requirements.

(2) Contractor's invoice. The Contractor shall prepare and submit invoices to the designated billing office specified in the contract. A proper invoice must include the items listed in paragraphs (a)(2)(i) through (a)(2)(xi) of this clause. If the invoice does not comply with these requirements, the designated billing office must return it within 7 days after receipt, with the reasons why it is not a proper invoice. When computing any interest penalty owed the Contractor, the Government will take into account if the Government notifies the Contractor of an improper invoice in an untimely manner.

(i) Name and address of the Contractor.

(ii) Invoice date and invoice number. (The Contractor should date invoices as close as possible to the date of mailing or transmission.)

(iii) Contract number or other authorization for work or services performed (including order number and contract line item number).

(iv) Description of work or services performed.

(v) Delivery and payment terms (e.g., discount for prompt payment terms).

(vi) Name and address of Contractor official to whom payment is to be sent (must be the same as that in the contract or in a proper notice of assignment).

(vii) Name (where practicable), title, phone number, and mailing address of person to notify in the event of a defective invoice.

(viii) For payments described in paragraph (a)(1)(i) of this clause, substantiation of the amounts requested and certification in accordance with the requirements of the clause at 52.232-5, Payments Under Fixed-Price Construction Contracts.

(ix) Taxpayer Identification Number (TIN). The Contractor shall include its TIN on the invoice only if required elsewhere in this contract.

(x) Electronic funds transfer (EFT) banking information.

(A) The Contractor shall include EFT banking information on the invoice only if required elsewhere in this contract.

(B) If EFT banking information is not required to be on the invoice, in order for the invoice to be a proper invoice, the Contractor shall have submitted correct EFT banking information in accordance with the applicable solicitation provision (e.g., 52.232-38, Submission of Electronic Funds Transfer Information with Offer), contract clause (e.g., 52.232-33, Payment by Electronic Funds Transfer--Central Contractor Registration, or 52.232-34, Payment by Electronic Funds Transfer--Other Than Central Contractor Registration), or applicable agency procedures.

(C) EFT banking information is not required if the Government waived the requirement to pay by EFT.

(xi) Any other information or documentation required by the contract.

(3) Interest penalty. The designated payment office will pay an interest penalty automatically, without request from the Contractor, if payment is not made by the due date and the conditions listed in paragraphs (a)(3)(i) through (a)(3)(iii) of this clause are met, if applicable. However, when the due date falls on a Saturday, Sunday, or legal holiday, the designated payment office may make payment on the following working day without incurring a late payment interest penalty.

(i) The designated billing office received a proper invoice.

(ii) The Government processed a receiving report or other Government documentation authorizing payment and there was no disagreement over quantity, quality, Contractor compliance with any contract term or condition, or requested progress payment amount.

(iii) In the case of a final invoice for any balance of funds due the Contractor for work or services performed, the amount was not subject to further contract settlement actions between the Government and the Contractor.

(4) Computing penalty amount. The Government will compute the interest penalty in accordance with the Office of Management and Budget prompt payment regulations at 5 CFR part 1315.

(i) For the sole purpose of computing an interest penalty that might be due the Contractor for payments described in paragraph (a)(1)(ii) of this clause, Government acceptance or approval is deemed to occur constructively on the 7th day after the Contractor has completed the work or services in accordance with the terms and conditions of the contract. If actual acceptance or approval occurs within the constructive acceptance or approval period, the Government will base the determination of an interest penalty on the actual date of acceptance or approval. Constructive acceptance or constructive approval requirements do not apply if there is a disagreement over quantity, quality, or Contractor compliance with a contract provision. These requirements also do not compel Government officials to accept work or services, approve Contractor estimates, perform contract administration functions, or make payment prior to fulfilling their responsibilities.

(ii) The prompt payment regulations at 5 CFR 1315.10(c) do not require the Government to pay interest penalties if payment delays are due to disagreement between the Government and the Contractor over the payment amount or other issues involving contract compliance, or on amounts temporarily withheld or retained in accordance with the terms of the contract. The Government and the Contractor shall resolve claims involving disputes, and any interest that may be payable in accordance with the clause at FAR 52.233-1, Disputes.

(5) Discounts for prompt payment. The designated payment office will pay an interest penalty automatically, without request from the Contractor, if the Government takes a discount for prompt payment improperly. The Government will calculate the interest penalty in accordance with the prompt payment regulations at 5 CFR part 1315.

(6) Additional interest penalty. (i) The designated payment office will pay a penalty amount, calculated in accordance with the prompt payment regulations at 5 CFR part 1315 in addition to the interest penalty amount only if--

(A) The Government owes an interest penalty of $1 or more;

(B) The designated payment office does not pay the interest penalty within 10 days after the date the invoice amount is paid; and

(C) The Contractor makes a written demand to the designated payment office for additional penalty payment, in accordance with paragraph (a)(6)(ii) of this clause, postmarked not later than 40 days after the date the invoice amount is paid.

(ii)(A) The Contractor shall support written demands for additional penalty payments with the following data. The Government will not request any additional data. The Contractor shall--

(1) Specifically assert that late payment interest is due under a specific invoice, and request payment of all overdue late payment interest penalty and such additional penalty as may be required;

(2) Attach a copy of the invoice on which the unpaid late payment interest was due; and

(3) State that payment of the principal has been received, including the date of receipt.

(B) If there is no postmark or the postmark is illegible--

(1) The designated payment office that receives the demand will annotate it with the date of receipt provided the demand is received on or before the 40th day after payment was made; or

(2) If the designated payment office fails to make the required annotation, the Government will determine the demand's validity based on the date the Contractor has placed on the demand, provided such date is no later than the 40th day after payment was made.

(b) Contract financing payments. If this contract provides for contract financing, the Government will make contract financing payments in accordance with the applicable contract financing clause.

(c) Subcontract clause requirements. The Contractor shall include in each subcontract for property or services (including a material supplier) for the purpose of performing this contract the following:

(1) Prompt payment for subcontractors. A payment clause that obligates the Contractor to pay the subcontractor for satisfactory performance under its subcontract not later than 7 days from receipt of payment out of such amounts as are paid to the Contractor under this contract.

(2) Interest for subcontractors. An interest penalty clause that obligates the Contractor to pay to the subcontractor an interest penalty for each payment not made in accordance with the payment clause--

(i) For the period beginning on the day after the required payment date and ending on the date on which payment of the amount due is made; and

(ii) Computed at the rate of interest established by the Secretary of the Treasury, and published in the Federal Register, for interest payments under section 12 of the Contract Disputes Act of 1978 (41 U.S.C. 611) in effect at the time the Contractor accrues the obligation to pay an interest penalty.

(3) Subcontractor clause flowdown. A clause requiring each subcontractor to use:

(i) Include a payment clause and an interest penalty clause conforming to the standards set forth in paragraphs (c)(1) and (c)(2) of this clause in each of its subcontracts; and

(ii) Require each of its subcontractors to include such clauses in their subcontracts with each lower-tier subcontractor or supplier.

(d) Subcontract clause interpretation. The clauses required by paragraph (c) of this clause shall not be construed to impair the right of the Contractor or a subcontractor at any tier to negotiate, and to include in their subcontract, provisions that--

(1) Retainage permitted. Permit the Contractor or a subcontractor to retain (without cause) a specified percentage of each progress payment otherwise due to a subcontractor for satisfactory performance under the subcontract without incurring any obligation to pay a late payment interest penalty, in accordance with terms and conditions agreed to by the parties to the subcontract, giving such recognition as the parties deem appropriate to the ability of a subcontractor to furnish a performance bond and a payment bond;

(2) Withholding permitted. Permit the Contractor or subcontractor to make a determination that part or all of the subcontractor's request for payment may be withheld in accordance with the subcontract agreement; and

(3) Withholding requirements. Permit such withholding without incurring any obligation to pay a late payment penalty if--

(i) A notice conforming to the standards of paragraph (g) of this clause previously has been furnished to the subcontractor; and

(ii) The Contractor furnishes to the Contracting Officer a copy of any notice issued by a Contractor pursuant to paragraph (d)(3)(i) of this clause.

(e) Subcontractor withholding procedures. If a Contractor, after making a request for payment to the Government but before making a payment to a subcontractor for the subcontractor's performance covered by the payment request, discovers that all or a portion of the payment otherwise due such subcontractor is subject to withholding from the subcontractor in accordance with the subcontract agreement, then the Contractor shall--

(1) Subcontractor notice. Furnish to the subcontractor a notice conforming to the standards of paragraph (g) of this clause as soon as practicable upon ascertaining the cause giving rise to a withholding, but prior to the due date for subcontractor payment;

(2) Contracting Officer notice. Furnish to the Contracting Officer, as soon as practicable, a copy of the notice furnished to the subcontractor pursuant to paragraph (e)(1) of this clause;

(3) Subcontractor progress payment reduction. Reduce the subcontractor's progress payment by an amount not to exceed the amount specified in the notice of withholding furnished under paragraph (e)(1) of this clause;

(4) Subsequent subcontractor payment. Pay the subcontractor as soon as practicable after the correction of the identified subcontract performance deficiency, and--

(i) Make such payment within--

(A) Seven days after correction of the identified subcontract performance deficiency (unless the funds therefor must be recovered from the Government because of a reduction under paragraph
(e)(5)(i)) of this clause; or

(B) Seven days after the Contractor recovers such funds from the Government; or

(ii) Incur an obligation to pay a late payment interest penalty computed at the rate of interest established by the Secretary of the Treasury, and published in the Federal Register, for interest payments under section 12 of the Contracts Disputes Act of 1978 (41 U.S.C. 611) in effect at the time the Contractor accrues the obligation to pay an interest penalty;

(5) Notice to Contracting Officer. Notify the Contracting Officer upon--

(i) Reduction of the amount of any subsequent certified application for payment; or

(ii) Payment to the subcontractor of any withheld amounts of a progress payment, specifying--

(A) The amounts withheld under paragraph (e)(1) of this clause; and

(B) The dates that such withholding began and ended; and

(6) Interest to Government. Be obligated to pay to the Government an amount equal to interest on the withheld payments (computed in the manner provided in 31 U.S.C. 3903(c)(1)), from the 8th day after receipt of the withheld amounts from the Government until--

(i) The day the identified subcontractor performance deficiency is corrected; or

(ii) The date that any subsequent payment is reduced under paragraph (e)(5)(i) of this clause.

(f) Third-party deficiency reports--(1) Withholding from subcontractor. If a Contractor, after making payment to a first-tier subcontractor, receives from a supplier or subcontractor of the first-tier subcontractor (hereafter referred to as a “second-tier subcontractor”) a written notice in accordance with section 2 of the Act of August 24, 1935 (40 U.S.C. 270b, Miller Act), asserting a deficiency in such first-tier subcontractor's performance under the contract for which the Contractor may be ultimately liable, and the Contractor determines that all or a portion of future payments

otherwise due such first-tier subcontractor is subject to withholding in accordance with the subcontract agreement, the Contractor may, without incurring an obligation to pay an interest penalty under paragraph (e)(6) of this clause--

(i) Furnish to the first-tier subcontractor a notice conforming to the standards of paragraph (g) of this clause as soon as practicable upon making such determination; and

(ii) Withhold from the first-tier subcontractor's next available progress payment or payments an amount not to exceed the amount specified in the notice of withholding furnished under paragraph (f)(1)(i) of this clause.

(2) Subsequent payment or interest charge. As soon as practicable, but not later than 7 days after receipt of satisfactory written notification that the identified subcontract performance deficiency has been corrected, the Contractor shall--

(i) Pay the amount withheld under paragraph (f)(1)(ii) of this clause to such first-tier subcontractor; or

(ii) Incur an obligation to pay a late payment interest penalty to such first-tier subcontractor computed at the rate of interest established by the Secretary of the Treasury, and published in the Federal Register, for interest payments under section 12 of the Contracts DisputesAct of 1978 (41 U.S.C. 611) in effect at the time the Contractor accrues the obligation to pay an interest penalty.

(g) Written notice of subcontractor withholding. The Contractor shall issue a written notice of any withholding to a subcontractor (with a copy furnished to the Contracting Officer), specifying--

(1) The amount to be withheld;

(2) The specific causes for the withholding under the terms of the subcontract; and

(3) The remedial actions to be taken by the subcontractor in order to receive payment of the amounts withheld.

(h) Subcontractor payment entitlement. The Contractor may not request payment from the Government of any amount withheld or retained in accordance with paragraph (d) of this clause until such time as the Contractor has determined and certified to the Contracting Officer that the subcontractor is entitled to the payment of such amount.

(i) Prime-subcontractor disputes. A dispute between the Contractor and subcontractor relating to the amount or entitlement of a subcontractor to a payment or a late payment interest penalty under a clause included in the subcontract pursuant to paragraph (c) of this clause does not constitute a dispute to which the Government is a party. The Government may not be interpleaded in any judicial or administrative proceeding involving such a dispute.

(j) Preservation of prime-subcontractor rights. Except as provided in paragraph (i) of this clause, this clause shall not limit or impair any contractual, administrative, or judicial remedies otherwise available to the Contractor or a subcontractor in the event of a dispute involving late payment or nonpayment by the Contractor or deficient subcontract performance or nonperformance by a subcontractor.

(k) Non-recourse for prime contractor interest penalty. The Contractor's obligation to pay an interest penalty to a subcontractor pursuant to the clauses included in a subcontract under paragraph (c) of this clause shall not be construed to be an obligation of the Government for such interest penalty. A cost-reimbursement claim may not include any amount for reimbursement of such interest penalty.

(l) Overpayments. If the Contractor becomes aware of a duplicate contract financing or invoice payment or that the Government has otherwise overpaid on a contract financing or invoice payment, the Contractor shall immediately notify the Contracting Officer and request instructions for disposition of the overpayment.

(End of clause)

52.232-33 PAYMENT BY ELECTRONIC FUNDS TRANSFER—CENTRAL CONTRACTOR REGISTRATION (OCT 2003)

(a) Method of payment. (1) All payments by the Government under this contract shall be made by electronic funds transfer (EFT), except as provided in paragraph (a)(2) of this clause. As used in this clause, the term “EFT” refers to the funds transfer and may also include the payment information transfer.

(2) In the event the Government is unable to release one or more payments by EFT, the Contractor agrees to either--

(i) Accept payment by check or some other mutually agreeable method of payment; or

(ii) Request the Government to extend the payment due date until such time as the Government can make payment by EFT (but see paragraph (d) of this clause).

(b) Contractor's EFT information. The Government shall make payment to the Contractor using the EFT information contained in the Central Contractor Registration (CCR) database. In the event that the EFT information changes, the Contractor shall be responsible for providing the updated information to the CCR database.

(c) Mechanisms for EFT payment. The Government may make payment by EFT through either the Automated Clearing House (ACH) network, subject to the rules of the National Automated Clearing House Association, or the Fedwire Transfer System. The rules governing Federal payments through the ACH are contained in 31 CFR part 210.

(d) Suspension of payment. If the Contractor's EFT information in the CCR database is incorrect, then the Government need not make payment to the Contractor under this contract until correct EFT information is entered into the CCR database; and any invoice or contract financing request shall be deemed not to be a proper invoice for the purpose of prompt payment under this contract. The prompt payment terms of the contract regarding notice of an improper invoice and delays in accrual of interest penalties apply.

(e) Liability for uncompleted or erroneous transfers. (1) If an uncompleted or erroneous transfer occurs because the Government used the Contractor's EFT information incorrectly, the Government remains responsible for--

(i) Making a correct payment;

(ii) Paying any prompt payment penalty due; and

(iii) Recovering any erroneously directed funds.

(2) If an uncompleted or erroneous transfer occurs because the Contractor's EFT information was incorrect, or was revised within 30 days of Government release of the EFT payment transaction instruction to the Federal Reserve System, and--

(i) If the funds are no longer under the control of the payment office, the Government is deemed to have made payment and the Contractor is responsible for recovery of any erroneously directed funds; or

(ii) If the funds remain under the control of the payment office, the Government shall not make payment, and the provisions of paragraph (d) of this clause shall apply.

(f) EFT and prompt payment. A payment shall be deemed to have been made in a timely manner in accordance with the prompt payment terms of this contract if, in the EFT payment transaction instruction released to the Federal

Reserve System, the date specified for settlement of the payment is on or before the prompt payment due date, provided the specified payment date is a valid date under the rules of the Federal Reserve System.

(g) EFT and assignment of claims. If the Contractor assigns the proceeds of this contract as provided for in the assignment of claims terms of this contract, the Contractor shall require as a condition of any such assignment, that the assignee shall register separately in the CCR database and shall be paid by EFT in accordance with the terms of this clause. Notwithstanding any other requirement of this contract, payment to an ultimate recipient other than the Contractor, or a financial institution properly recognized under an assignment of claims pursuant to subpart 32.8, is not permitted. In all respects, the requirements of this clause shall apply to the assignee as if it were the Contractor. EFT information that shows the ultimate recipient of the transfer to be other than the Contractor, in the absence of a proper assignment of claims acceptable to the Government, is incorrect EFT information within the meaning of paragraph (d) of this clause.

(h) Liability for change of EFT information by financial agent. The Government is not liable for errors resulting from changes to EFT information made by the Contractor's financial agent.

(i) Payment information. The payment or disbursing office shall forward to the Contractor available payment information that is suitable for transmission as of the date of release of the EFT instruction to the Federal Reserve System. The Government may request the Contractor to designate a desired format and method(s) for delivery of payment information from a list of formats and methods the payment office is capable of executing. However, the Government does not guarantee that any particular format or method of delivery is available at any particular payment office and retains the latitude to use the format and delivery method most convenient to the Government. If the Government makes payment by check in accordance with paragraph (a) of this clause, the Government shall mail the payment information to the remittance address contained in the CCR database.

(End of Clause)

52.232-5001 CONTINUING CONTRACTS (MAR 1995)--EFARS

(a) This is a continuing contract, as authorized by Section 10 of the
River and Harbor Act of September 22, 1922 (33 U.S. Code 621). The payment of some portion of the contract price is dependent upon reservations of funds from future appropriations, and from future contribution to the project having one or more non-federal project sponsors. The responsibilities of the Government are limited by this clause notwithstanding any contrary provision of the "Payments to Contractor" clause or any other clause of this contract.

(b) The sum of **$250,000.00** has been reserved for this contract and is available for payments to the contractor during the current fiscal year. It is expected that Congress will make appropriations for future fiscal years from which additional funds together with funds provided by one or more non-federal project sponsors will be reserved for this contract.

(c) Failure to make payments in excess of the amount currently reserved, or that may be reserved from time to time, shall not entitle the contractor to a price adjustment under the terms of this contract except as specifically provided in paragraphs (f) and (i) below. No such failure shall constitute a breach of this contract, except that this provision shall not bar a breach-of-contract action if an amount finally determined to be due as a termination allowance remains unpaid for one year due solely to a failure to reserve sufficient additional funds therefore.

(d) The Government may at any time reserve additional funds for payments under the contract if there are funds available for such purpose. The contracting officer will promptly notify the contractor of any additional funds reserved for the contract by issuing an administrative modification
to the contract.

(e) If earnings will be such that funds reserved for the contract will be exhausted before the end of any fiscal year, the contractor shall give written notice to the contracting officer of the estimated date of exhaustion and the amount of additional funds which will be needed to meet payments due or to become due under the contract during that fiscal year. This notice shall be given not less than 45 nor more than 60 days prior to the estimated date of exhaustion.

(f) No payments will be made after exhaustion of funds except to the extent that additional funds are reserved for the contract. The contractor shall be entitled to simple interest on any payment that the contracting officer determines was actually earned under the terms of the contract and would have been made except for exhaustion of funds. Interest shall be computed from the time such payment would otherwise have been made until actually or constructively made, and shall be at the rate established by the Secretary of the Treasury pursuant to Public Law 92-41, 85 STAT 97, as in effect on the first day of the delay in such payment.

(g) Any suspension, delay, or interruption of work arising from exhaustion or anticipated exhaustion of funds shall not constitute a breach of this contract and shall not entitle the contractor to any price adjustment under the "Suspension of Work" clause or in any other manner under this contract.

(h) An equitable adjustment in performance time shall be made for any increase in the time required for performance of any part of the work arising from exhaustion of funds or the reasonable anticipation of exhaustion of funds.

(i) If, upon the expiration of sixty (60) days after the beginning of the fiscal year following an exhaustion of funds, the Government has failed to reserve sufficient additional funds to cover payments otherwise due, the contractor, by written notice delivered to the contracting officer at any time before such additional funds are reserved, may elect to treat his right to proceed with the work as having been terminated. Such a termination shall be considered a termination for the convenience of the Government.

(j) If at any time it becomes apparent that the funds reserved for any fiscal year are in excess of the funds required to meet all payments due or to become due the contractor because of work performed and to be performed under the contract during the fiscal year, the Government reserves the right, after notice to the contractor, to reduce said reservation by the amount of such excess.

(End of clause)

52.233-1 DISPUTES. (JUL 2002)

(a) This contract is subject to the Contract Disputes Act of 1978, as amended (41 U.S.C. 601-613).

(b) Except as provided in the Act, all disputes arising under or relating to this contract shall be resolved under this clause.

(c) Claim, as used in this clause, means a written demand or written assertion by one of the contracting parties seeking, as a matter of right, the payment of money in a sum certain, the adjustment or interpretation of contract terms, or other relief arising under or relating to this contract. However, a written demand or written assertion by the Contractor seeking the payment of money exceeding $100,000 is not a claim under the Act until certified. A voucher, invoice, or other routine request for payment that is not in dispute when submitted is not a claim under the Act. The submission may be converted to a claim under the Act, by complying with the submission and certification requirements of this clause, if it is disputed either as to liability or amount or is not acted upon in a reasonable time.

(d)(1) A claim by the Contractor shall be made in writing and, unless otherwise stated in this contract, submitted within 6 years after accrual of the claim to the Contracting Officer for a written decision. A claim by the Government against the Contractor shall be subject to a written decision by the Contracting Officer.

(2)(i) The contractors shall provide the certification specified in subparagraph (d)(2)(iii) of this clause when submitting any claim -

(A) Exceeding $100,000; or

(B) Regardless of the amount claimed, when using -

(1) Arbitration conducted pursuant to 5 U.S.C. 575-580; or

(2) Any other alternative means of dispute resolution (ADR) technique that the agency elects to handle in accordance with the Administrative Dispute Resolution Act (ADRA).

(ii) The certification requirement does not apply to issues in controversy that have not been submitted as all or part of a claim.

(iii) The certification shall state as follows: "I certify that the claim is made in good faith; that the supporting data are accurate and complete to the best of my knowledge and belief; that the amount requested accurately reflects the contract adjustment for which the Contractor believes the Government is liable; and that I am duly authorized to certify the claim on behalf of the Contractor.

(3) The certification may be executed by any person duly authorized to bind the Contractor with respect to the claim.

(e) For Contractor claims of $100,000 or less, the Contracting Officer must, if requested in writing by the Contractor, render a decision within 60 days of the request. For Contractor-certified claims over $100,000, the Contracting Officer must, within 60 days, decide the claim or notify the Contractor of the date by which the decision will be made.

(f) The Contracting Officer's decision shall be final unless the Contractor appeals or files a suit as provided in the Act.

(g) If the claim by the Contractor is submitted to the Contracting Officer or a claim by the Government is presented to the Contractor, the parties, by mutual consent, may agree to use alternative disput resolution (ADR). If the Contractor refuses an offer for ADR, the Contractor shall inform the Contracting Officer, in writing, of the Contractor's specific reasons for rejecting the request.

(h) The Government shall pay interest on the amount found due and unpaid from (1) the date the Contracting Officer receives the claim (certified, if required); or (2) the date that payment otherwise would be due, if that date is later, until the date of payment. With regard to claims having defective certifications, as defined in (FAR) 48 CFR 33.201, interest shall be paid from the date that the Contracting Officer initially receives the claim. Simple interest on claims shall be paid at the rate, fixed by the Secretary of the Treasury as provided in the Act, which is applicable to the period during which the Contracting Officer receives the claim and then at the rate applicable for each 6-month period as fixed by the Treasury Secretary during the pendency of the claim.

(i) The Contractor shall proceed diligently with performance of this contract, pending final resolution of any request for relief, claim, appeal, or action arising under the contract, and comply with any decision of the Contracting Officer.

(End of clause)

52.233-3 PROTEST AFTER AWARD (AUG. 1996)

(a) Upon receipt of a notice of protest (as defined in FAR 33.101) or a determination that a protest is likely (see FAR 33.102(d)), the Contracting Officer may, by written order to the Contractor, direct the Contractor to stop performance of the work called for by this contract. The order shall be specifically identified as a stop-work order issued under this clause. Upon receipt of the order, the Contractor shall immediately comply with its terms and take all reasonable steps to minimize the incurrence of costs allocable to the work covered by the order during the period of work stoppage. Upon receipt of the final decision in the protest, the Contracting Officer shall either--

(1) Cancel the stop-work order; or

(2) Terminate the work covered by the order as provided in the Default, or the Termination for Convenience of the Government, clause of this contract.

(b) If a stop-work order issued under this clause is canceled either before or after a final decision in the protest, the Contractor shall resume work. The Contracting Officer shall make an equitable adjustment in the delivery schedule or contract price, or both, and the contract shall be modified, in writing, accordingly, if--

(1) The stop-work order results in an increase in the time required for, or in the Contractor's cost properly allocable to, the performance of any part of this contract; and

(2) The Contractor asserts its right to an adjustment within 30 days after the end of the period of work stoppage; provided, that if the Contracting Officer decides the facts justify the action, the Contracting Officer may receive and act upon a proposal at any time before final payment under this contract.

(c) If a stop-work order is not canceled and the work covered by the order is terminated for the convenience of the Government, the Contracting Officer shall allow reasonable costs resulting from the stop-work order in arriving at the termination settlement.

(d) If a stop-work order is not canceled and the work covered by the order is terminated for default, the Contracting Officer shall allow, by equitable adjustment or otherwise, reasonable costs resulting from the stop-work order.

(e) The Government's rights to terminate this contract at any time are not affected by action taken under this clause.

(f) If, as the result of the Contractor's intentional or negligent misstatement, misrepresentation, or miscertification, a protest related to this contract is sustained, and the Government pays costs, as provided in FAR 33.102(b)(2) or 33.104(h)(1), the Government may require the Contractor to reimburse the Government the amount of such costs. In addition to any other remedy available, and pursuant to the requirements of Subpart 32.6, the Government may collect this debt by offsetting the amount against any payment due the Contractor under any contract between the Contractor and the Government.

(End of clause)

52.236-1 PERFORMANCE OF WORK BY THE CONTRACTOR (APR 1984)

The Contractor shall perform on the site, and with its own organization, work equivalent to at least **fifteen (15)** percent of the total amount of work to be performed under the contract. This percentage may be reduced by a supplemental agreement to this contract if, during performing the work, the Contractor requests a reduction and the Contracting Officer determines that the reduction would be to the advantage of the Government.

(End of clause)

52.236-2 DIFFERING SITE CONDITIONS (APR 1984)

As prescribed in 36.502, insert the following clause in solicitations and contracts when a fixed-price construction contract or a fixed-price dismantling, demolition, or removal of improvements contract is contemplated and the contract amount is expected to exceed the small purchase limitation. The Contracting Officer may insert the clause in solicitations and contracts when a fixed-price construction or a fixed-price contract for dismantling, demolition, or removal of improvements is contemplated and the contract amount is expected to be within the small purchase

limitation.

(a) The Contractor shall promptly, and before the conditions are disturbed, give a written notice to the Contracting Officer of

(1) subsurface or latent physical conditions at the site which differ materially from those indicated in this contract, or

(2) unknown physical conditions at the site, of an unusual nature, which differ materially from those ordinarily encountered and generally recognized as inhering in work of the character provided for in the contract.

(b) The Contracting Officer shall investigate the site conditions promptly after receiving the notice. If the conditions do materially so differ and cause an increase or decrease in the Contractor's cost of, or the time required for, performing any part of the work under this contract, whether or not changed as a result of the conditions, an equitable adjustment shall be made under this clause and the contract modified in writing accordingly.

(c) No request by the Contractor for an equitable adjustment to the contract under this clause shall be allowed, unless the Contractor has given the written notice required; provided, that the time prescribed in (a) above for giving written notice may be extended by the Contracting Officer.

(d) No request by the Contractor for an equitable adjustment to the contract for differing site conditions shall be allowed if made after final payment under this contract.

(End of clause)

52.236-3 SITE INVESTIGATION AND CONDITIONS AFFECTING THE WORK (APR 1984)

(a) The Contractor acknowledges that it has taken steps reasonably necessary to ascertain the nature and location of the work, and that it has investigated and satisfied itself as to the general and local conditions which can affect the work or its cost, including but not limited to

(1) conditions bearing upon transportation, disposal, handling, and storage of materials;

(2) the availability of labor, water, electric power, and roads;

(3) uncertainties of weather, river stages, tides, or similar physical conditions at the site;

(4) the conformation and conditions of the ground; and (5) the character of equipment and facilities needed preliminary to and during work performance. The Contractor also acknowledges that it has satisfied itself as to the character, quality, and quantity of surface and subsurface materials or obstacles to be encountered insofar as this information is reasonably ascertainable from an inspection of the site, including all exploratory work done by the Government, as well as from the drawings and specifications made a part of this contract. Any failure of the Contractor to take the actions described and acknowledged in this paragraph will not relieve the Contractor from responsibility for estimating properly the difficulty and cost of successfully performing the work, or for proceeding to successfully perform the work without additional expense to the Government.

(b) The Government assumes no responsibility for any conclusions or interpretations made by the Contractor based on the information made available by the Government. Nor does the Government assume responsibility for any understanding reached or representation made concerning conditions which can affect the work by any of its officers or agents before the execution of this contract, unless that understanding or representation is expressly stated in this contract.

(End of clause)

52.236-4 PHYSICAL DATA (APR 1984)

Data and information furnished or referred to below is for the Contractor's information. The Government shall not be responsible for any interpretation of or conclusion drawn from the data or information by the Contractor.

(a) The indications of physical conditions on the drawings and in the specifications are the result of site investigations by aerial photographs and topographic surveys.

(b) Weather conditions. Information with respect to temperatures and precipitation may be obtained from the National Weather Service. Also see Section 00800, paragraph SP 17, "Time Extensions for Unusually Severe Weather".

(c) Additional Data. Additional data consisting of cross sections, river stage records, and record of borings, may be available for inspection at the U.S. Army Engineer District, Memphis, Tennessee.

(End of clause)

52.236-5 MATERIAL AND WORKMANSHIP (APR 1984)

(a) All equipment, material, and articles incorporated into the work covered by this contract shall be new and of the most suitable grade for the purpose intended, unless otherwise specifically provided in this contract. References in the specifications to equipment, material, articles, or patented processes by trade name, make, or catalog number, shall be regarded as establishing a standard of quality and shall not be construed as limiting competition. The Contractor may, at its option, use any equipment, material, article, or process that, in the judgment of the Contracting Officer, is equal to that named in the specifications, unless otherwise specifically provided in this contract.

(b) The Contractor shall obtain the Contracting Officer's approval of the machinery and mechanical and other equipment to be incorporated into the work. When requesting approval, the Contractor shall furnish to the Contracting Officer the name of the manufacturer, the model number, and other information concerning the performance, capacity, nature, and rating of the machinery and mechanical and other equipment. When required by this contract or by the Contracting Officer, the Contractor shall also obtain the Contracting Officer's approval of the material or articles which the Contractor contemplates incorporating into the work. When requesting approval, the Contractor shall provide full information concerning the material or articles. When directed to do so, the Contractor shall submit samples for approval at the Contractor's expense, with all shipping charges prepaid. Machinery, equipment, material, and articles that do not have the required approval shall be installed or used at the risk of subsequent rejection.

(c) All work under this contract shall be performed in a skillful and workmanlike manner. The Contracting Officer may require, in writing, that the Contractor remove from the work any employee the Contracting Officer deems incompetent, careless, or otherwise objectionable.

(End of clause)

52.236-6 SUPERINTENDENCE BY THE CONTRACTOR (APR 1984)

At all times during performance of this contract and until the work is completed and accepted, the Contractor shall directly superintend the work or assign and have on the worksite a competent superintendent who is satisfactory to the Contracting Officer and has authority to act for the Contractor.

(End of clause)

52.236-7 PERMITS AND RESPONSIBILITIES (NOV 1991)

The Contractor shall, without additional expense to the Government, be responsible for obtaining any necessary licenses and permits, and for complying with any Federal, State, and municipal laws, codes, and regulations applicable to the performance of the work. The Contractor shall also be responsible for all damages to persons or property that occur as a result of the Contractor's fault or negligence. The Contractor shall also be responsible for all materials delivered and work performed until completion and acceptance of the entire work, except for any completed unit of work which may have been accepted under the contract.

(End of clause)

52.236-8 OTHER CONTRACTS (APR 1984)

The Government may undertake or award other contracts for additional work at or near the site of the work under this contract. The Contractor shall fully cooperate with the other contractors and with Government employees and shall carefully adapt scheduling and performing the work under this contract to accommodate the additional work, heeding any direction that may be provided by the Contracting Officer. The Contractor shall not commit or permit any act that will interfere with the performance of work by any other contractor or by Government employees.

(End of clause)

52.236-9 PROTECTION OF EXISTING VEGETATION, STRUCTURES, EQUIPMENT, UTILITIES, AND IMPROVEMENTS (APR 1984)

(a) The Contractor shall preserve and protect all structures, equipment, and vegetation (such as trees, shrubs, and grass) on or adjacent to the work site, which are not to be removed and which do not unreasonably interfere with the work required under this contract. The Contractor shall only remove trees when specifically authorized to do so, and shall avoid damaging vegetation that will remain in place. If any limbs or branches of trees are broken during contract performance, or by the careless operation of equipment, or by workmen, the Contractor shall trim those limbs or branches with a clean cut and paint the cut with a tree-pruning compound as directed by the Contracting Officer.

(b) The Contractor shall protect from damage all existing improvements and utilities

(1) at or near the work site, and

(2) on adjacent property of a third party, the locations of which are made known to or should be known by the Contractor. The Contractor shall repair any damage to those facilities, including those that are the property of a third party, resulting from failure to comply with the requirements of this contract or failure to exercise reasonable care in performing the work. If the Contractor fails or refuses to repair the damage promptly, the Contracting Officer may have the necessary work performed and charge the cost to the Contractor.

(End of clause)

52.236-10 OPERATIONS AND STORAGE AREAS (APR 1984)

(a) The Contractor shall confine all operations (including storage of materials) on Government premises to areas authorized or approved by the Contracting Officer. The Contractor shall hold and save the Government, its officers and agents, free and harmless from liability of any nature occasioned by the Contractor's performance.

(b) Temporary buildings (e.g., storage sheds, shops, offices) and utilities may be erected by the Contractor only with the approval of the Contracting Officer and shall be built with labor and materials furnished by the Contractor without expense to the Government. The temporary buildings and utilities shall remain the property of the Contractor and shall be removed by the Contractor at its expense upon completion of the work. With the written consent of the Contracting Officer, the buildings and utilities may be abandoned and need not be removed.

(c) The Contractor shall, under regulations prescribed by the Contracting Officer, use only established roadways, or use temporary roadways constructed by the Contractor when and as authorized by the Contracting Officer. When materials are transported in prosecuting the work, vehicles shall not be loaded beyond the loading capacity recommended by the manufacturer of the vehicle or prescribed by any Federal, State, or local law or regulation. When it is necessary to cross curbs or sidewalks, the Contractor shall protect them from damage. The Contractor shall repair or pay for the repair of any damaged curbs, sidewalks, or roads.

(End of clause)

52.236-11 USE AND POSSESSION PRIOR TO COMPLETION (APR 1984)

(a) The Government shall have the right to take possession of or use any completed or partially completed part of the work. Before taking possession of or using any work, the Contracting Officer shall furnish the Contractor a list of items of work remaining to be performed or corrected on those portions of the work that the Government intends to take possession of or use. However, failure of the Contracting Officer to list any item of work shall not relieve the Contractor of responsibility for complying with the terms of the contract. The Government's possession or use shall not be deemed an acceptance of any work under the contract.

(b) While the Government has such possession or use, the Contractor shall be relieved of the responsibility for the loss of or damage to the work resulting from the Government's possession or use, notwithstanding the terms of the clause in this contract entitled "Permits and Responsibilities." If prior possession or use by the Government delays the progress of the work or causes additional expense to the Contractor, an equitable adjustment shall be made in the contract price or the time of completion, and the contract shall be modified in writing accordingly.

(End of clause)

52.236-12 CLEANING UP (APR 1984)

The Contractor shall at all times keep the work area, including storage areas, free from accumulations of waste materials. Before completing the work, the Contractor shall remove from the work and premises any rubbish, tools, scaffolding, equipment, and materials that are not the property of the Government. Upon completing the work, the Contractor shall leave the work area in a clean, neat, and orderly condition satisfactory to the Contracting Officer.

(End of clause)

52.236-13 ACCIDENT PREVENTION (NOV 1991) – ALTERNATE I (NOV 1991)

(a) The Contractor shall provide and maintain work environments and procedures which will

(1) safeguard the public and Government personnel, property, materials, supplies, and equipment exposed to Contractor operations and activities;

(2) avoid interruptions of Government operations and delays in project completion dates; and

(3) control costs in the performance of this contract.

(b) For these purposes on contracts for construction or dismantling, demolition, or removal of improvements, the Contractor shall-

(1) Provide appropriate safety barricades, signs, and signal lights;

(2) Comply with the standards issued by the Secretary of Labor at 29 CFR Part 1926 and 29 CFR Part 1910; and

(3) Ensure that any additional measures the Contracting Officer determines to be reasonably necessary for the purposes are taken.

(5) If this contract is for construction or dismantling, demolition or removal of improvements with any Department of Defense agency or component, the Contractor shall comply with all pertinent provisions of the latest version of U.S. Army Corps of Engineers Safety and Health Requirements Manual, EM 385-1-1, in effect on the date of the solicitation.

(i) Whenever the Contracting Officer becomes aware of any noncompliance with these requirements or any condition which poses a serious or imminent danger to the health or safety of the public or Government personnel, the Contracting Officer shall notify the Contractor orally, with written confirmation, and request immediate initiation of corrective action. This notice, when delivered to the Contractor or the Contractor's representative at the work site, shall be deemed sufficient notice of the noncompliance and that corrective action is required. After receiving the notice, the Contractor shall immediately take corrective action. If the Contractor fails or refuses to promptly take corrective action, the Contracting Officer may issue an order stopping all or part of the work until satisfactory corrective action has been taken. The Contractor shall not be entitled to any equitable adjustment of the contract price or extension of the performance schedule on any stop work order issued under this clause.

(e) The Contractor shall insert this clause, including this paragraph (e), with appropriate changes in the designation of the parties, in subcontracts.

(f) Before commencing the work, the Contractor shall-

(1) Submit a written proposed plan for implementing this clause. The plan shall include an analysis of the significant hazards to life, limb, and property inherent in contract work performance and a plan for controlling these hazards; and

(2) Meet with representatives of the Contracting Officer to discuss and develop a mutual understanding relative to administration of the overall safety program.

(End of clause)

52.236-15 SCHEDULES FOR CONSTRUCTION CONTRACTS (APR 1984)

(a) The Contractor shall, within five days after the work commences on the contract or another period of time determined by the Contracting Officer, prepare and submit to the Contracting Officer for approval three copies of a practicable schedule showing the order in which the Contractor proposes to perform the work, and the dates on which the Contractor contemplates starting and completing the several salient features of the work (including acquiring materials, plant, and equipment). The schedule shall be in the form of a progress chart of suitable scale to indicate appropriately the percentage of work scheduled for completion by any given date during the period. If the Contractor fails to submit a schedule within the time prescribed, the Contracting Officer may withhold approval of progress payments until the Contractor submits the required schedule.

(b) The Contractor shall enter the actual progress on the chart as directed by the Contracting Officer, and upon doing so shall immediately deliver three copies of the annotated schedule to the Contracting Officer. If, in the opinion of the Contracting Officer, the Contractor falls behind the approved schedule, the Contractor shall take steps necessary to improve its progress, including those that may be required by the Contracting Officer, without additional cost to the Government. In this circumstance, the Contracting Officer may require the Contractor to increase the number of shifts, overtime operations, days of work, and/or the amount of construction plant, and to submit for approval any supplementary schedule or schedules in chart form as the Contracting Officer deems necessary to demonstrate how the approved rate of progress will be regained.

(c) Failure of the Contractor to comply with the requirements of the Contracting Officer under this clause shall be grounds for a determination by the Contracting Officer that the Contractor is not prosecuting the work with sufficient diligence to ensure completion within the time specified in the contract. Upon making this determination, the Contracting Officer may terminate the Contractor's right to proceed with the work, or any separable part of it, in accordance with the default terms of this contract.

(End of clause)

52.236-16 QUANTITY SURVEYS (APR 1984) - ALTERNATE I (APR 1984)

(a) Quantity surveys shall be conducted, and the data derived from these surveys shall be used in computing the quantities of work performed and the actual construction completed and in place.

(b) The Contractor shall conduct the original and final surveys and surveys for any periods for which progress payments are requested. All these surveys shall be conducted under the direction of a representative of the Contracting Officer, unless the Contracting Officer waives this requirement in a specific instance. The Government shall make such computations as are necessary to determine the quantities of work performed or finally in place. The Contractor shall make the computations based on the surveys for any periods for which progress payments are requested.

(c) Promptly upon completing a survey, the Contractor shall furnish the originals of all field notes and all other records relating to the survey or to the layout of the work to the Contracting Officer, who shall use them as necessary to determine the amount of progress payments. The

Contractor shall retain copies of all such material furnished to the Contracting Officer.

(End of clause)

52.236-17 LAYOUT OF WORK (APR 1984)

The Contractor shall lay out its work from Government established base lines and bench marks indicated on the drawings, and shall be responsible for all measurements in connection with the layout. The Contractor shall furnish, at its own expense, all stakes, templates, platforms, equipment, tools, materials, and labor required to lay out any part of the work. The Contractor shall be responsible for executing the work to the lines and grades that may be established or indicated by the Contracting Officer. The Contractor shall also be responsible for maintaining and preserving all stakes and other marks established by the Contracting Officer until authorized to remove them. If such marks are destroyed by the Contractor or through its negligence before their removal is authorized, the Contracting Officer may replace them and deduct the expense of the replacement from any amounts due or to become due to the Contractor.

(End of clause)

52.236-21 SPECIFICATIONS AND DRAWINGS FOR CONSTRUCTION (FEB 1997) - ALTERNATE II (APR 1984).

(a) The Contractor shall keep on the work site a copy of the drawings and specifications and shall at all times give the Contracting Officer access thereto. Anything mentioned in the specifications and not shown on the drawings, or shown on the drawings and not mentioned in the specifications, shall be of like effect as if shown or mentioned in both. In case of difference between drawings and specifications, the specifications shall govern. In case of discrepancy in the figures, in the drawings, or in the specifications, the matter shall be promptly submitted to the Contracting Officer, who shall promptly make a determination in writing. Any adjustment by the Contractor without such a determination shall be at its own risk and expense. The Contracting Officer shall furnish from time to time such detailed drawings and other information as considered necessary, unless otherwise provided.

(b) Wherever in the specifications or upon the drawings the words "directed", "required", "ordered", "designated", "prescribed", or words of like import are used, it shall be understood that the "direction", "requirement", "order", "designation", or "prescription", of the Contracting Officer is intended and similarly the words "approved", "acceptable", "satisfactory", or words of like import shall mean "approved by," or "acceptable to", or "satisfactory to" the Contracting Officer, unless otherwise expressly stated.

(c) Where "as shown," as indicated", "as detailed", or words of similar import are used, it shall be understood that the reference is made to the drawings accompanying this contract unless stated otherwise. The word "provided" as used herein shall be understood to mean "provide complete in place," that is "furnished and installed".

(d) Shop drawings means drawings, submitted to the Government by the Contractor, subcontractor, or any lower tier subcontractor pursuant to a construction contract, showing in detail (1) the proposed fabrication and assembly of structural elements, and (2) the installation (i.e., fit, and attachment details) of materials or equipment. It includes drawings, diagrams, layouts, schematics, descriptive literature, illustrations, schedules, performance and test data, and similar materials furnished by the contractor to explain in detail specific portions of the work required by the contract. The Government may duplicate, use, and disclose in any manner and for any purpose shop drawings delivered under this contract.

(e) If this contract requires shop drawings, the Contractor shall coordinate all such drawings, and review them for accuracy, completeness, and compliance with contract requirements and shall indicate its approval thereon as evidence of such coordination and review. Shop drawings submitted to the Contracting Officer without evidence of the Contractor's approval may be returned for resubmission. The Contracting Officer will indicate an approval or disapproval of the shop drawings and if not approved as submitted shall indicate the Government's reasons therefor. Any work done before such approval shall be at the Contractor's risk. Approval by the Contracting Officer shall not relieve the Contractor from responsibility for any errors or omissions in such drawings, nor from responsibility for complying with the requirements of this contract, except with respect to variations described and approved in accordance with (f) below.

(f) If shop drawings show variations from the contract requirements, the Contractor shall describe such variations in writing, separate from the drawings, at the time of submission. If the Contracting Officer approves any such variation, the Contracting Officer shall issue an appropriate contract modification, except that, if the variation is minor or does not involve a change in price or in time of performance, a modification need not be issued.

(g) The Contractor shall submit to the Contracting Officer for approval six (6) copies (unless otherwise indicated) of all shop drawings as called for under the various headings of these specifications. Five (5) sets (unless otherwise indicated) of all shop drawings, will be retained by the Contracting Officer and one set will be returned to the Contractor. The Contractor shall maintain three (3) full-size sets of the Contract drawings depicting a current record of the work as actually constructed. One set is for the Contractor's use and two for the Government's use. These working as-built drawing red-line mark-ups may be manually or electronically generated using the construction plans. These working as-built drawings shall be reviewed at least monthly with the Contracting Officer, prior to the Contractor submitting a request for progress payment. Both shall certify that the as-built drawings are accurate and up-to-date before progress payment is made. Upon completion of the work and not later than 60 days from acceptance, the Contractor shall deliver a complete final set of the as-built red-line marked-up plans depicting the construction as actually accomplished. The final as-built drawings shall be identified as such by marking or stamping them with the words "AS-BUILT DRAWINGS" in letters at least 3/16" high. Those drawings where no change is involved shall be marked or stamped "AS-BUILT, NO CHANGE". Compliance and delivery of the final as-built drawings will be enforced through the approval of final payment. Also, the quality of the final as-built drawings will be reflected in the Contractor's performance evaluation. These drawings shall show changes and revisions made up to the time the equipment is completed and accepted.

52.236-26 PRECONSTRUCTION CONFERENCE (FEB 1995)

If the Contracting Officer decides to conduct a preconstruction conference, the successful offeror will be notified and will be required to attend. The Contracting Officer's notification will include specific details regarding the date, time, and location of the conference, any need for attendance by subcontractors, and information regarding the items to be discussed.

(End of clause)

52.236-5000 PLANT AND MATERIAL REMOVAL AFTER CONTRACT TERMINATION (MAR 1995)--EFARS

Should this contract be terminated as provided in clause 52.232-5001 because of the failure of Congress to provide additional funds for its completion, the contractor may be permitted to remove plant and material on which payments for preparatory work have been made, subject to an equitable deduction from the amounts due the contractor to reimburse the United States for the unabsorbed value of such plant and material.

(End of clause)

52.242-13 BANKRUPTCY (JUL 1995)

In the event the Contractor enters into proceedings relating to bankruptcy, whether voluntary or involuntary, the Contractor agrees to furnish, by certified mail or electronic commerce method authorized by the contract, written notification of the bankruptcy to the Contracting Officer responsible for administering the contract. This notification shall be furnished within five days of the initiation of the proceedings relating to bankruptcy filing.

This notification shall include the date on which the bankruptcy petition was filed, the identity of the court in which the bankruptcy petition was filed, and a listing of Government contract numbers and contracting offices for all Government contracts against which final payment has not been made. This obligation remains in effect until final payment under this contract.

(End of clause)

52.242-14 SUSPENSION OF WORK (APR 1984)

(a) The Contracting Officer may order the Contractor, in writing, to suspend, delay, or interrupt all or any part of the work of this contract for the period of time that the Contracting Officer determines appropriate for the convenience of the Government.

(b) If the performance of all or any part of the work is, for an unreasonable period of time, suspended, delayed, or interrupted (1) by an act of the Contracting Officer in the administration of this contract, or (2) by the Contracting Officer's failure to act within the time specified in this contract (or within a reasonable time if not specified), an adjustment shall be made for any increase in the cost of performance of this contract (excluding profit) necessarily caused by the unreasonable suspension, delay, or interruption, and the contract modified in writing accordingly. However, no adjustment shall be made under this clause for any suspension, delay, or interruption to the extent that performance would have been so suspended, delayed, or interrupted by any other cause, including the fault or negligence of the Contractor, or for which an equitable adjustment is provided for or excluded under any other term or condition of this contract. (c) A claim under this clause shall not be allowed (1) for any costs incurred more than 20 days before the Contractor shall have notified the Contracting Officer in writing of the act or failure to act involved (but this requirement shall not apply as to a claim resulting from a suspension order), and (2) unless the claim, in an amount stated, is asserted in writing as soon as practicable after the termination of the suspension, delay, or interruption, but not later than the date of final payment under the contract.

(End of clause)

52.243-4 CHANGES (AUG 1987)

(a) The Contracting Officer may, at any time, without notice to the sureties, if any, by written order designated or indicated to be a change order, make changes in the work within the general scope of the contract, including changes--

(1) In the specifications (including drawings and designs);

(2) In the method or manner of performance of the work;

(3) In the Government-furnished facilities, equipment, materials, services, or site; or

(4) Directing acceleration in the performance of the work.

(b) Any other written or oral order (which, as used in this paragraph (b), includes direction, instruction, interpretation, or determination) from the Contracting Officer that causes a change shall be treated as a change order under this clause; provided, that the Contractor gives the Contracting Officer written notice stating

(1) the date, circumstances, and source of the order and

(2) that the Contractor regards the order as a change order.

(c) Except as provided in this clause, no order, statement, or conduct of the Contracting Officer shall be treated as a change under this clause or entitle the Contractor to an equitable adjustment.

(d) If any change under this clause causes an increase or decrease in the Contractor's cost of, or the time required for, the performance of any part of the work under this contract, whether or not changed by any such order, the Contracting Officer shall make an equitable adjustment and modify the contract in writing. However, except for an adjustment based on defective specifications, no adjustment for any change under paragraph (b) of this clause shall be made for any costs incurred more than 20 days before the Contractor gives written notice as required. In the case of defective specifications for which the Government is responsible, the equitable adjustment shall include any increased cost reasonably incurred by the Contractor in attempting to comply with the defective specifications.

(e) The Contractor must assert its right to an adjustment under this clause within 30 days after

(1) receipt of a written change order under paragraph (a) of this clause or (2) the furnishing of a written notice under paragraph (b) of this clause, by submitting to the Contracting Officer a written statement describing the general nature and amount of the proposal, unless this period is extended by the Government. The statement of proposal for adjustment may be included in the notice under paragraph (b) above.

(f) No proposal by the Contractor for an equitable adjustment shall be allowed if asserted after final payment under this contract.

(End of clause)

52.245-2 GOVERNMENT PROPERTY (FIXED-PRICE CONTRACTS) (MAY 2004)

(a) Government-furnished property.

(1) Overseas contracts. If this contract is to be performed outside of the United States and its outlying areas, the words ``Government'' and ``Government-furnished'' (wherever they appear in this clause) shall be construed as ``United States Government'' and ``United States Government-furnished,'' respectively.

(2) The delivery or performance dates for this contract are based upon the expectation that Government-furnished property suitable for use (except for property furnished "as is") will be delivered to the Contractor at the times stated in the Schedule or, if not so stated, in sufficient time to enable the Contractor to meet the contract's delivery or performance dates.

(3) If Government-furnished property is received by the Contractor in a condition not suitable for the intended use, the Contractor shall, upon receipt of it, notify the Contracting Officer, detailing the facts, and, as directed by the Contracting Officer and at Government expense, either repair, modify, return, or otherwise dispose of the property. After completing the directed action and upon written request of the Contractor, the Contracting Officer shall make an equitable adjustment as provided in paragraph (h) of this clause.

(4) If Government-furnished property is not delivered to the Contractor by the required time, the Contracting Officer shall, upon the Contractor's timely written request, make a determination of the delay, if any, caused the Contractor and shall make an equitable adjustment in accordance with paragraph (h) of this clause.

(b) Changes in Government-furnished property. (1) The Contracting Officer may, by written notice, (i) decrease the Government-furnished property provided or to be provided under this contract, or (ii) substitute other Government-furnished property for the property to be provided by the Government, or to be acquired by the Contractor for the Government, under this contract. The Contractor shall promptly take such action as the Contracting Officer may direct regarding the removal, shipment, or disposal of the property covered by such notice.

(2) Upon the Contractor's written request, the Contracting Officer shall make an equitable adjustment to the contract in accordance with paragraph (h) of this clause, if the Government has agreed in the Schedule to make the property available for performing this contract and there is any--

(i) Decrease or substitution in this property pursuant to subparagraph (b)(1) of this clause; or

(ii) Withdrawal of authority to use this property, if provided under any other contract or lease.

(c) Title in Government property. (1) The Government shall retain title to all Government-furnished property.

(2) All Government-furnished property and all property acquired by the Contractor, title to which vests in the Government under this paragraph (collectively referred to as "Government property"), are subject to the provisions of this clause. However, special tooling accountable to this contract is subject to the provisions of the Special Tooling clause and is not subject to the provisions of this clause. Title to Government property shall not be affected by its incorporation into or attachment to any property not owned by the Government, nor shall Government property become a fixture or lose its identity as personal property by being attached to any real property.

(3) Title to each item of facilities and special test equipment acquired by the Contractor for the Government under this contract shall pass to and vest in the Government when its use in performing this contract commences or when the Government has paid for it, whichever is earlier, whether or not title previously vested in the Government.

(4) If this contract contains a provision directing the Contractor to purchase material for which the Government will reimburse the Contractor as a direct item of cost under this contract--

(i) Title to material purchased from a vendor shall pass to and vest in the Government upon the vendor's delivery of such material; and

(ii) Title to all other material shall pass to and vest in the Government upon--

(A) Issuance of the material for use in contract performance;

(B) Commencement of processing of the material or its use in contract performance; or

(C) Reimbursement of the cost of the material by the Government, whichever occurs first.

(d) Use of Government property. The Government property shall be used only for performing this contract, unless otherwise provided in this contract or approved by the Contracting Officer.

(e) Property administration. (1) The Contractor shall be responsible and accountable for all Government property provided under this contract and shall comply with Federal Acquisition Regulation (FAR) Subpart 45.5, as in effect on the date of this contract.

(2) The Contractor shall establish and maintain a program for the use, maintenance, repair, protection, and preservation of Government property in accordance with sound industrial practice and the applicable provisions of Subpart 45.5 of the FAR.

(3) If damage occurs to Government property, the risk of which has been assumed by the Government under this contract, the Government shall replace the items or the Contractor shall make such repairs as the Government directs. However, if the Contractor cannot effect such repairs within the time required, the Contractor shall dispose of the property as directed by the Contracting Officer. When any property for which the Government is responsible is replaced or repaired, the Contracting Officer shall make an equitable adjustment in accordance with paragraph (h) of this clause.

(4) The Contractor represents that the contract price does not include any amount for repairs or replacement for which the Government is responsible. Repair or replacement of property for which the Contractor is responsible shall be accomplished by the Contractor at its own expense.

(f) Access. The Government and all its designees shall have access at all reasonable times to the premises in which any Government property is located for the purpose of inspecting the Government property.

(g) Risk of loss. Unless otherwise provided in this contract, the Contractor assumes the risk of, and shall be responsible for, any loss or destruction of, or damage to, Government property upon its delivery to the Contractor or upon passage of title to the Government under paragraph (c) of this clause. However, the Contractor is not responsible for reasonable wear and tear to Government property or for Government property properly consumed in performing this contract.

(h) Equitable adjustment. When this clause specifies an equitable adjustment, it shall be made to any affected contract provision in accordance with the procedures of the Changes clause. When appropriate, the Contracting Officer may initiate an equitable adjustment in favor of the Government. The right to an equitable adjustment shall be the Contractor's exclusive remedy. The Government shall not be liable to suit for breach of contract for--

(1) Any delay in delivery of Government-furnished property;

(2) Delivery of Government-furnished property in a condition not suitable for its intended use;

(3) A decrease in or substitution of Government-furnished property; or

(4) Failure to repair or replace Government property for which the Government is responsible.

(i) Government property disposal. Except as provided in paragraphs (i)(1)(i), (i)(2), and (i)(8)(i) of this clause, the Contractor shall not dispose of Government property until authorized to do so by the Plant Clearance Officer.

(1) Scrap (to which the Government has obtained title under paragraph (c) of this clause).--(i) Contractor with an approved scrap procedure.--(A) The Contractor may dispose of scrap resulting from production or testing under this contract without Government approval. However, if the scrap requires demilitarization or is sensitive property, the Contractor shall submit the scrap on an inventory disposal schedule.

(B) For scrap from other than production or testing the Contractor may prepare scrap lists in lieu of inventory disposal schedules (provided such lists are consistent with the approved scrap procedures), except that inventory disposal schedules shall be submitted for scrap aircraft or aircraft parts and scrap that--

(1) Requires demilitarization;

(2) Is a classified item;

(3) Is generated from classified items;

(4) Contains hazardous materials or hazardous wastes;

(5) Contains precious metals; or

(6) Is dangerous to the public health, safety, or welfare.

(ii) Contractor without an approved scrap procedure. The Contractor shall submit an inventory disposal schedule for all scrap.

(2) Pre-disposal requirements. When the Contractor determines that a property item acquired or produced by the Contractor, to which the Government has obtained title under paragraph (c) of this clause, is no longer needed for performance of this contract, the Contractor, in the following order of priority:

(i) May purchase the property at the **acquisition** cost.

(ii) Shall make reasonable efforts to return unused property to the appropriate supplier at fair market value (less, if applicable, a reasonable restocking fee that is consistent with the supplier's customary practices).

(iii) Shall list, on Standard Form 1428, Inventory Disposal Schedule, property that was not purchased under paragraph (i)(2)(i) of this clause, could not be returned to a supplier, or could not be used in the performance of other Government contracts.

(3) Inventory disposal schedules.--(i) The Contractor shall use Standard Form 1428, Inventory Disposal Schedule, to identify--

(A) Government-furnished property that is no longer required for performance of this contract, provided the terms of another Government contract do not require the Government to furnish that property for performance of that contract; and

(B) Property acquired or produced by the Contractor, to which the Government has obtained title under paragraph (c) of this clause, that is no longer required for performance of that contract.

(ii) The Contractor may annotate inventory disposal schedules to identify property the Contractor wishes to purchase from the Government.

(iii) Unless the Plant Clearance Officer has agreed otherwise, or the contract requires electronic submission of inventory disposal schedules, the Contractor shall prepare separate inventory disposal schedules for--

(A) Special test equipment with commercial components;

(B) Special test equipment without commercial components;

(C) Printing equipment;

(D) Computers, components thereof, peripheral equipment, and related equipment;

(E) Precious Metals;

(F) Nonnuclear hazardous materials or hazardous wastes; or

(G) Nuclear materials or nuclear wastes.

(iv) Property with the same description, condition code, and reporting location may be grouped in a single line item. The Contractor shall describe special test equipment in sufficient detail to permit an understanding of the special test equipment's intended use.

(4) Submission requirements. The Contractor shall submit inventory disposal schedules to the Plant Clearance Officer no later than--

(i) Thirty days following the Contractor's determination that a Government property item is no longer required for performance of the contract;

(ii) Sixty days, or such longer period as may be approved by the Plant Clearance Officer, following completion of contract deliveries or performance; or

(iii) One hundred twenty days, or such longer period as may be approved by the Plant Clearance Officer, following contract termination in whole or in part.

(5) Corrections. The Plant Clearance Officer may require the Contractor to correct an inventory disposal schedule or may reject a schedule if the property identified on the schedule is not accountable under this contract or is not in the quantity or condition indicated.

(6) Postsubmission adjustments. The Contractor shall provide the Plant Clearance Officer at least 10 working days advance written notice of its intent to remove a property item from an approved inventory disposal schedule. Unless the Plant Clearance Officer objects to the intended schedule adjustment within the notice period, the Contractor may make the adjustment upon expiration of the notice period.

(7) Storage.--

(i) The Contractor shall store the property identified on an inventory disposal schedule pending receipt of disposal instructions. The Government's failure to provide disposal instructions within 120 days following acceptance of an inventory disposal schedule might entitle the Contractor to an equitable adjustment for costs incurred to store such property on or after the 121st day.

(ii) The Contractor shall obtain the Plant Clearance Officer's approval to remove Government property from the premises at which the property is currently located prior to receipt of final disposition instructions. If approval is granted, any costs incurred by the Contractor to transport or store the property shall not increase the price or fee of any Government contract. The storage facility shall be appropriate for assuring the property's physical safety and suitability for use. Approval does not relieve the Contractor of any liability under this contract for such property.

(8) Disposition instructions.

(i) If the Government does not provide disposition instructions to the Contractor within 45 days following acceptance of a scrap list, the Contractor may dispose of the listed scrap in accordance with the Contractor's approved scrap procedures.

(ii) The Contractor shall prepare for shipment, deliver f.o.b. origin, or dispose of Government property as directed by the Plant Clearance Officer. The Contractor shall remove and destroy any markings identifying the property as Government property prior to disposing of the property.

(iii) The Contracting Officer may require the Contractor to demilitarize the property prior to shipment or disposal. Any equitable adjustment incident to the Contracting Officer's direction to demilitarize Government property shall be made in accordance with paragraph (h) of this clause.

(9) Disposal proceeds. The Contractor shall credit the net proceeds from the disposal of Government property to the price or cost of work covered by this contract or to the Government as the Contracting Officer directs.

(10) Subcontractor inventory disposal schedules. The Contractor shall require a subcontractor that is using property accountable under this contract at a subcontractor-managed site to submit inventory disposal schedules to the Contractor in sufficient time for the Contractor to comply with the requirements of paragraph (i)(4) of this clause.

(j) Abandonment of Government property.

(1) The Government will not abandon sensitive Government property without the Contractor's written consent.

(2) The Government, upon notice to the Contractor, may abandon any nonsensitive Government property in place at which time all obligations of the Government regarding such abandoned property shall cease.

(3) The Government has no obligation to restore or rehabilitate the Contractor's premises under any circumstances; however, if Government-furnished property is withdrawn or is unsuitable for the intended use, or if other Government property is substituted, then the equitable adjustment under paragraph (h) of this clause may properly include restoration or rehabilitation costs.

(k) Communications. All communications under this clause shall be in writing.

(l) Overseas contracts. If this contract is to be performed outside of the United States of America, its territories, or possessions, the words "Government" and "Government-furnished" (wherever they appear in this clause) shall be construed as "United States Government" and "United States Government-furnished," respectively.

(End of clause)

52.246-12 INSPECTION OF CONSTRUCTION (AUG 1996)

(a) Definition. "Work" includes, but is not limited to, materials, workmanship, and manufacture and fabrication of components.

(b) The Contractor shall maintain an adequate inspection system and perform such inspections as will ensure that the work performed under the contract conforms to contract requirements. The Contractor shall maintain complete inspection records and make them available to the Government. All work shall be conducted under the general direction of the Contracting Officer and is subject to Government inspection and test at all places and at all reasonable times before acceptance to ensure strict compliance with the terms of the contract.

(c) Government inspections and tests are for the sole benefit of the Government and do not--

(1) Relieve the Contractor of responsibility for providing adequate quality control measures;

(2) Relieve the Contractor of responsibility for damage to or loss of the material before acceptance;

(3) Constitute or imply acceptance; or

(4) Affect the continuing rights of the Government after acceptance of the completed work under paragraph (i) of this section.

(d) The presence or absence of a Government inspector does not relieve the Contractor from any contract requirement, nor is the inspector authorized to change any term or condition of the specification without the Contracting Officer's written authorization.

(e) The Contractor shall promptly furnish, at no increase in contract price, all facilities, labor, and material reasonably needed for performing such safe and convenient inspections and tests as may be required by the Contracting Officer. The Government may charge to the Contractor any additional cost of inspection or test when work is not ready at the time specified by the Contractor for inspection or test, or when prior rejection makes reinspection or retest necessary. The Government shall perform all inspections and tests in a manner that will not unnecessarily delay the work. Special, full size, and performance tests shall be performed as described in the contract.

(f) The Contractor shall, without charge, replace or correct work found by the Government not to conform to

contract requirements, unless in the public interest the Government consents to accept the work with an appropriate adjustment in contract price. The Contractor shall promptly segregate and remove rejected material from the premises.

(g) If the Contractor does not promptly replace or correct rejected work, the Government may (1) by contract or otherwise, replace or correct the work and charge the cost to the Contractor or (2) terminate for default the Contractor's right to proceed.

(h) If, before acceptance of the entire work, the Government decides to examine already completed work by removing it or tearing it out, the Contractor, on request, shall promptly furnish all necessary facilities, labor, and material. If the work is found to be defective or nonconforming in any material respect due to the fault of the Contractor or its subcontractors, the Contractor shall defray the expenses of the examination and of satisfactory reconstruction. However, if the work is found to meet contract requirements, the Contracting Officer shall make an equitable adjustment for the additional services involved in the examination and reconstruction, including, if completion of the work was thereby delayed, an extension of time.

(i) Unless otherwise specified in the contract, the Government shall accept, as promptly as practicable after completion and inspection, all work required by the contract or that portion of the work the Contracting Officer determines can be accepted separately. Acceptance shall be final and conclusive except for latent defects, fraud, gross mistakes amounting to fraud, or the Government's rights under any warranty or guarantee.

(End of clause)

52.246-21 WARRANTY OF CONSTRUCTION (MAR 1994)

(a) In addition to any other warranties in this contract, the Contractor warrants, except as provided in paragraph (i) of this clause, that work performed under this contract conforms to the contract requirements and is free of any defect in equipment, material, or design furnished, or workmanship performed by the Contractor or any subcontractor or supplier at any tier.

(b) This warranty shall continue for a period of 1 year from the date of final acceptance of the work. If the Government takes possession of any part of the work before final acceptance, this warranty shall continue for a period of 1 year from the date the Government takes possession.

(c) The Contractor shall remedy at the Contractor's expense any failure to conform, or any defect. In addition, the Contractor shall remedy at the Contractor's expense any damage to Government-owned or controlled real or personal property, when that damage is the result of--

(1) The Contractor's failure to conform to contract requirements; or

(2) Any defect of equipment, material, workmanship, or design furnished.

(d) The Contractor shall restore any work damaged in fulfilling the terms and conditions of this clause. The Contractor's warranty with respect to work repaired or replaced will run for 1 year from the date of repair or replacement.

(e) The Contracting Officer shall notify the Contractor, in writing, within a reasonable time after the discovery of any failure, defect, or damage.

(f) If the Contractor fails to remedy any failure, defect, or damage within a reasonable time after receipt of notice, the Government shall have the right to replace, repair, or otherwise remedy the failure, defect, or damage at the Contractor's expense.

(g) With respect to all warranties, express or implied, from subcontractors, manufacturers, or suppliers for work performed and materials furnished under this contract, the Contractor shall--

(1) Obtain all warranties that would be given in normal commercial practice;

(2) Require all warranties to be executed, in writing, for the benefit of the Government, if directed by the Contracting Officer; and

(3) Enforce all warranties for the benefit of the Government, if directed by the Contracting Officer.

(h) In the event the Contractor's warranty under paragraph (b) of this clause has expired, the Government may expense to enforce a subcontractor's, manufacturer's, or supplier's warranty.

(i) Unless a defect is caused by the negligence of the Contractor or subcontractor or supplier at any tier, the Contractor shall not be liable for the repair of any defects of material or design furnished by the Government nor for the repair of any damage that results from any defect in Government-furnished material or design.

(j) This warranty shall not limit the Government's rights under the Inspection and Acceptance clause of this contract with respect to latent defects, gross mistakes, or fraud.

(End of clause)

52.248-3 VALUE ENGINEERING--CONSTRUCTION (FEB 2000)

(a) General. The Contractor is encouraged to develop, prepare, and submit value engineering change proposals (VECP's) voluntarily. The Contractor shall share in any instant contract savings realized from accepted VECP's, in accordance with paragraph (f) below.

(b) Definitions. "Collateral costs," as used in this clause, means agency costs of operation, maintenance, logistic support, or Government-furnished property.

"Collateral savings," as used in this clause, means those measurable net reductions resulting from a VECP in the agency's overall projected collateral costs, exclusive of acquisition savings, whether or not the acquisition cost changes.

"Contractor's development and implementation costs," as used in this clause, means those costs the Contractor incurs on a VECP specifically in developing, testing, preparing, and submitting the VECP, as well as those costs the Contractor incurs to make the contractual changes required by Government acceptance of a VECP.

"Government costs," as used in this clause, means those agency costs that result directly from developing and implementing the VECP, such as any net increases in the cost of testing, operations, maintenance, and logistic support. The term does not include the normal administrative costs of processing the VECP.

"Instant contract savings," as used in this clause, means the estimated reduction in Contractor cost of performance resulting from acceptance of the VECP, minus allowable Contractor's development and implementation costs, including subcontractors' development and implementation costs (see paragraph (h) below).

"Value engineering change proposal (VECP)" means a proposal that--

(1) Requires a change to this, the instant contract, to implement; and

(2) Results in reducing the contract price or estimated cost without impairing essential functions or characteristics; provided, that it does not involve a change--

(i) In deliverable end item quantities only; or

(ii) To the contract type only.

(c) VECP preparation. As a minimum, the Contractor shall include in each VECP the information described in subparagraphs (1) through (7) below. If the proposed change is affected by contractually required configuration management or similar procedures, the instructions in those procedures relating to format, identification, and priority assignment shall govern VECP preparation. The VECP shall include the following:

(1) A description of the difference between the existing contract requirement and that proposed, the comparative advantages and disadvantages of each, a justification when an item's function or characteristics are being altered, and the effect of the change on the end item's performance.

(2) A list and analysis of the contract requirements that must be changed if the VECP is accepted, including any suggested specification revisions.

(3) A separate, detailed cost estimate for

(i) the affected portions of the existing contract requirement and

(ii) the VECP. The cost reduction associated with the VECP shall take into account the Contractor's allowable development and implementation costs, including any amount attributable to subcontracts under paragraph (h) below.

(4) A description and estimate of costs the Government may incur in implementing the VECP, such as test and evaluation and operating and support costs.

(5) A prediction of any effects the proposed change would have on collateral costs to the agency.

(6) A statement of the time by which a contract modification accepting the VECP must be issued in order to achieve the maximum cost reduction, noting any effect on the contract completion time or delivery schedule.

(7) Identification of any previous submissions of the VECP, including the dates submitted, the agencies and contract numbers involved, and previous Government actions, if known.

(d) Submission. The Contractor shall submit VECP's to the Resident Engineer at the worksite, with a copy to the Contracting Officer.

(e) Government action.

(1) The Contracting Officer will notify the Contractor of the status of the VECP within 45 calendar days after the contracting office receives it. If additional time is required, the Contracting Officer will notify the Contractor within the 45-day period and provide the reason for the delay and the expected date of the decision. The Government will process VECP's expeditiously; however, it shall not be liable for any delay in acting upon a VECP.

If the VECP is not accepted, the Contracting Officer will notify the Contractor in writing, explaining the reasons for rejection. The Contractor may withdraw any VECP, in whole or in part, at any time before it is accepted by the Government. The Contracting Officer may require that the Contractor provide written notification before undertaking significant expenditures for VECP effort.

Any VECP may be accepted, in whole or in part, by the Contracting Officer's award of a modification to this contract citing this clause. The Contracting Officer may accept the VECP, even though an agreement on price reduction has not been reached, by issuing the Contractor a notice to proceed with the change. Until a notice to proceed is issued or a contract modification applies a VECP to this contract, the Contractor shall perform in accordance with the existing contract. The decision to accept or reject all or part of any VECP is a unilateral decision made solely at the discretion of the Contracting Officer.

(f) Sharing.

(1) Rates. The Government's share of savings is determined by subtracting Government costs from instant contract savings and multiplying the result by

(i) 45 percent for fixed-price contracts or

(ii) 75 percent for cost-reimbursement contracts.

(2) Payment. Payment of any share due the Contractor for use of a VECP on this contract shall be authorized by a modification to this contract to--

(i) Accept the VECP;

(ii) Reduce the contract price or estimated cost by the amount of instant contract savings; and

(iii) Provide the Contractor's share of savings by adding the amount calculated to the contract price or fee.

(g) Collateral savings. If a VECP is accepted, the Contracting Officer will increase the instant contract amount by 20 percent of any projected collateral savings determined to be realized in a typical year of use after subtracting any Government costs not previously offset. However, the Contractor's share of collateral savings will not exceed the contract's firm-fixed-price or estimated cost, at the time the VECP is accepted, or $100,000, whichever is greater. The Contracting Officer is the sole determiner of the amount of collateral savings.

(h) Subcontracts. The Contractor shall include an appropriate value engineering clause in any subcontract of $50,000 or more and may include one in subcontracts of lesser value. In computing any adjustment in this contract's price under paragraph (f) above, the Contractor's allowable development and implementation costs shall include any subcontractor's allowable development and implementation costs clearly resulting from a VECP accepted by the Government under this contract, but shall exclude any value engineering incentive payments to a subcontractor. The Contractor may choose any arrangement for subcontractor value engineering incentive payments; provided, that these payments shall not reduce the Government's share of the savings resulting from the VECP.

(i) Data. The Contractor may restrict the Government's right to use any part of a VECP or the supporting data by marking the following legend on the affected parts:

"These data, furnished under the Value Engineering-- Construction clause of contract . . . . . , shall not be disclosed outside the Government or duplicated, used, or disclosed, in whole or in part, for any purpose other than to evaluate a value engineering change proposal submitted under the clause. This restriction does not limit the Government's right to use information contained in these data if it has been obtained or is otherwise available from the Contractor or from another source without limitations." If a VECP is accepted, the Contractor hereby grants the Government unlimited rights in the VECP and supporting data, except that, with respect to data qualifying and submitted as limited rights technical data, the Government shall have the rights specified in the contract modification implementing the VECP and shall appropriately mark the data. (The terms "unlimited rights" and "limited rights" are defined in Part 27 of the Federal Acquisition Regulation.)

(End of clause)

52.249-2 TERMINATION FOR CONVENIENCE OF THE GOVERNMENT (FIXED-PRICE) (SEP 1996) - ALTERNATE I (SEP 1996)

(a) The Government may terminate performance of work under this contract in whole or, from time to time, in part if the Contracting Officer determines that a termination is in the Government's interest. The Contracting Officer shall terminate by delivering to the Contractor a Notice of Termination specifying the extent of termination and the effective date.

(b) After receipt of a Notice of Termination, and except as directed by the Contracting Officer, the Contractor shall immediately proceed with the following obligations, regardless of any delay in determining or adjusting any amounts due under this clause:

(1) Stop work as specified in the notice.

(2) Place no further subcontracts or orders (referred to as subcontracts in this clause) for materials, services, or facilities, except as necessary to complete the continued portion of the contract.

(3) Terminate all subcontracts to the extent they relate to the work terminated.

(4) Assign to the Government, as directed by the Contracting Officer, all right, title, and interest of the Contractor under the subcontracts terminated, in which case the Government shall have the right to settle or to pay any termination settlement proposal arising out of those terminations.

(5) With approval or ratification to the extent required by the Contracting Officer, settle all outstanding liabilities and termination settlement proposals arising from the termination of subcontracts; the approval or ratification will be final for purposes of this clause.

(6) As directed by the Contracting Officer, transfer title and deliver to the Government (i) the fabricated or unfabricated parts, work in process, completed work, supplies, and other material produced or acquired for the work terminated, and (ii) the completed or partially completed plans, drawings, information, and other property that, if the contract had been completed, would be required to be furnished to the Government.

(7) Complete performance of the work not terminated.

(8) Take any action that may be necessary, or that the Contracting Officer may direct, for the protection and preservation of the property related to this contract that is in the possession of the Contractor and in which the Government has or may acquire an interest.

(9) Use its best efforts to sell, as directed or authorized by the Contracting Officer, any property of the types referred to in subparagraph (b)(6) of this clause; provided, however, that the Contractor (i) is not required to extend credit to any purchaser and (ii) may acquire the property under the conditions prescribed by, and at prices approved by, the Contracting Officer. The proceeds of any transfer or disposition will be applied to reduce any payments to be made by the Government under this contract, credited to the price or cost of the work, or paid in any other manner directed by the Contracting Officer.

(c) The Contractor shall submit complete termination inventory schedules no later than 120 days from the effective date of termination, unless extended in writing by the Contracting Officer upon written request of the Contractor within this 120-day period.

(d) After expiration of the plant clearance period as defined in Subpart 45.6 of the Federal Acquisition Regulation, the Contractor may submit to the Contracting Officer a list, certified as to quantity and quality, of termination inventory not previously disposed of, excluding items authorized for disposition by the Contracting Officer. The

Contractor may request the Government to remove those items or enter into an agreement for their storage. Within 15 days, the Government will accept title to those items and remove them or enter into a storage agreement. The Contracting Officer may verify the list upon removal of the items, or if stored, within 45 days from submission of the list, and shall correct the list, as necessary, before final settlement.

(e) After termination, the Contractor shall submit a final termination settlement proposal to the Contracting Officer in the form and with the certification prescribed by the Contracting Officer. The Contractor shall submit the proposal promptly, but no later than 1 year from the effective date of termination, unless extended in writing by the Contracting Officer upon written request of the Contractor within this 1-year period. However, if the Contracting Officer determines that the facts justify it, a termination settlement proposal may be received and acted on after 1 year or any extension. If the Contractor fails to submit the proposal within the time allowed, the Contracting Officer may determine, on the basis of information available, the amount, if any, due the Contractor because of the termination and shall pay the amount determined.

(f) Subject to paragraph (e) of this clause, the Contractor and the Contracting Officer may agree upon the whole or any part of the amount to be paid or remaining to be paid because of the termination. The amount may include a reasonable allowance for profit on work done. However, the agreed amount, whether under this paragraph (g) or paragraph (g) of this clause, exclusive of costs shown in subparagraph (g)(3) of this clause, may not exceed the total contract price as reduced by (1) the amount of payments previously made and (2) the contract price of work not terminated. The contract shall be modified, and the Contractor paid the agreed amount. Paragraph (g) of this clause shall not limit, restrict, or affect the amount that may be agreed upon to be paid under this paragraph.

(g) If the Contractor and Contracting Officer fail to agree on the whole amount to be paid the Contractor because of the termination of work, the Contracting Officer shall pay the Contractor the amounts determined as follows, but without duplication of any amounts agreed upon under paragraph (f) of this clause:

(1) For contract work performed before the effective date of termination, the total (without duplication of any items) of--

(i) The cost of this work;

(ii) The cost of settling and paying termination settlement proposals under terminated subcontracts that are properly chargeable to the terminated portion of the contract if not included in subdivision (g)(1)(i) of this clause; and

(iii) A sum, as profit on subdivision (g)(1)(i) of this clause, determined by the Contracting Officer under 49.202 of the Federal Acquisition Regulation, in effect on the date of this contract, to be fair and reasonable; however, if it appears that the Contractor would have sustained a loss on the entire contract had it been completed, the Contracting Officer shall allow no profit under this subdivision (iii) and shall reduce the settlement to reflect the indicated rate of loss.

(2) The reasonable costs of settlement of the work terminated, including--

(i) Accounting, legal, clerical, and other expenses reasonably necessary for the preparation of termination settlement proposals and supporting data;

(ii) The termination and settlement of subcontracts (excluding the amounts of such settlements); and

(iii) Storage, transportation, and other costs incurred, reasonably necessary for the preservation, protection, or disposition of the termination inventory.

(h) Except for normal spoilage, and except to the extent that the Government expressly assumed the risk of loss, the Contracting Officer shall exclude from the amounts payable to the Contractor under paragraph (g) of this clause, the fair value, as determined by the Contracting Officer, of property that is destroyed, lost, stolen, or damaged so as to become undeliverable to the Government or to a buyer.

(i) The cost principles and procedures of Part 31 of the Federal Acquisition Regulation, in effect on the date of this contract, shall govern all costs claimed, agreed to, or determined under this clause.

(j) The Contractor shall have the right of appeal, under the Disputes clause, from any determination made by the Contracting Officer under paragraph (e), (g), or (l) of this clause, except that if the Contractor failed to submit the termination settlement proposal or request for equitable adjustment within the time provided in paragraph (e) or (l), respectively, and failed to request a time extension, there is no right of appeal.

(k) In arriving at the amount due the Contractor under this clause, there shall be deducted--

(1) All unliquidated advance or other payments to the Contractor under the terminated portion of this contract;

(2) Any claim which the Government has against the Contractor under this contract; and

(3) The agreed price for, or the proceeds of sale of, materials, supplies, or other things acquired by the Contractor or sold under the provisions of this clause and not recovered by or credited to the Government.

(l) If the termination is partial, the Contractor may file a proposal with the Contracting Officer for an equitable adjustment of the price(s) of the continued portion of the contract. The Contracting Officer shall make any equitable adjustment agreed upon. Any proposal by the Contractor for an equitable adjustment under this clause shall be requested within 90 days from the effective date of termination unless extended in writing by the Contracting Officer.

(m)(1) The Government may, under the terms and conditions it prescribes, make partial payments and payments against costs incurred by the Contractor for the terminated portion of the contract, if the Contracting Officer believes the total of these payments will not exceed the amount to which the Contractor will be entitled.

(2) If the total payments exceed the amount finally determined to be due, the Contractor shall repay the excess to the Government upon demand, together with interest computed at the rate established by the Secretary of the Treasury under 50 U.S.C. App. 1215(b)(2). Interest shall be computed for the period from the date the excess payment is received by the Contractor to the date the excess is repaid. Interest shall not be charged on any excess payment due to a reduction in the Contractor's termination settlement proposal because of retention or other disposition of termination inventory until 10 days after the date of the retention or disposition, or a later date determined by the Contracting Officer because of the circumstances.

(n) Unless otherwise provided in this contract or by statute, the Contractor shall maintain all records and documents relating to the terminated portion of this contract for 3 years after final settlement. This includes all books and other evidence bearing on the Contractor's costs and expenses under this contract. The Contractor shall make these records and documents available to the Government, at the Contractor's office, at all reasonable times, without any direct charge. If approved by the Contracting Officer, photographs, microphotographs, or other authentic reproductions may be maintained instead of original records and documents.

(End of clause)

52.249-10 DEFAULT (FIXED-PRICE CONSTRUCTION) (APR 1984)

(a) If the Contractor refuses or fails to prosecute the work or any separable part, with the diligence that will insure its completion within the time specified in this contract including any extension, or fails to complete the work within this time, the Government may, by written notice to the Contractor, terminate the right to proceed with the work (or the separable part of the work) that has been delayed. In this event, the Government may take over the work and complete it by contract or otherwise, and may take possession of and use any materials, appliances, and plant on the

work site necessary for completing the work. The Contractor and its sureties shall be liable for any damage to the Government resulting from the Contractor's refusal or failure to complete the work within the specified time, whether or not the Contractor's right to proceed with the work is terminated. This liability includes any increased costs incurred by the Government in completing the work.

(b) The Contractor's right to proceed shall not be terminated nor the Contractor charged with damages under this clause, if--

(1) The delay in completing the work arises from unforeseeable causes beyond the control and without the fault or negligence of the Contractor. Examples of such causes include

(i) acts of God or of the public enemy,

(ii) acts of the Government in either its sovereign or contractual capacity,

(iii) acts of another Contractor in the performance of a contract with the Government,

(iv) fires,

(v) floods,

(vi) epidemics,

(vii) quarantine restrictions,

(viii) strikes,

(ix) freight embargoes,

(x) unusually severe weather, or delays of subcontractors or suppliers at any tier arising from unforeseeable causes beyond the control and without the fault or negligence of both the Contractor and the subcontractors or suppliers; and

(2) The Contractor, within 10 days from the beginning of any delay (unless extended by the Contracting Officer), notifies the Contracting Officer in writing of the causes of delay. The Contracting Officer shall ascertain the facts and the extent of delay. If, in the judgment of the Contracting Officer, the findings of fact warrant such action, the time for completing the work shall be extended. The findings of the Contracting Officer shall be final and conclusive on the parties, but subject to appeal under the Disputes clause.

(c) If, after termination of the Contractor's right to proceed, it is determined that the Contractor was not in default, or that the delay was excusable, the rights and obligations of the parties will be the same as if the termination had been issued for the convenience of the Government.

The rights and remedies of the Government in this clause are in addition to any other rights and remedies provided by law or under this contract.

(End of clause)

52.249-5000 BASIS FOR SETTLEMENT OF PROPOSALS

Actual costs will be used to determine equipment costs for a settlement proposal submitted on the total cost basis under FAR 49.206-2(b). In evaluating a terminations settlement proposal using the total cost basis, the following principles will be applied to determine allowable equipment costs:

(6) Actual costs for each piece of equipment, or groups of similar serial or series equipment, need not be available in the contractor's accounting records to determine total actual equipment costs.

(2) If equipment costs have been allocated to a contract using predetermined rates , those charges will be adjusted to actual costs.

(3) Recorded job costs adjusted for unallowable expenses will be used to determine equipment operating expenses.

(4) Ownership costs (depreciation) will be determined using the contractor's depreciation schedule (subject to the provisions of FAR 31.205-11).

(5) License, taxes, storage and insurance costs are normally recovered as an indirect expense and unless the contractor charges these costs directly to contracts, they will be recovered through the indirect expense rate.

(End of Clause)

52.253-1 COMPUTER GENERATED FORMS (JAN 1991)

(a) Any data required to be submitted on a Standard or Optional Form prescribed by the Federal Acquisition Regulation (FAR) may be submitted on a computer generated version of the form, provided there is no change to the name, content, or sequence of the data elements on the form, and provided the form carries the Standard or Optional Form number and edition date.

(b) Unless prohibited by agency regulations, any data required to be submitted on an agency unique form prescribed by an agency supplement to the FAR may be submitted on a computer generated version of the form provided there is no change to the name, content, or sequence of the data elements on the form and provided the form carries the agency form number and edition date.

(7) If the Contractor submits a computer generated version of a form that is different than the required form, then the rights and obligations of the parties will be determined based on the content of the required form.

(End of clause)

252.201-7000 CONTRACTING OFFICER'S REPRESENTATIVE (DEC 1991)

(a) "Definition. Contracting officer's representative" means an individual designated in accordance with subsection 201.602-2 of the Defense Federal Acquisition Regulation Supplement and authorized in writing by the contracting officer to perform specific technical or administrative functions.

(b) If the Contracting Officer designates a contracting officer's representative (COR), the Contractor will receive a copy of the written designation. It will specify the extent of the COR's authority to act on behalf of the contracting officer. The COR is not authorized to make any commitments or changes that will affect price, quality, quantity, delivery, or any other term or condition of the contract.

(End of clause)

252.203-7001 PROHIBITION ON PERSONS CONVICTED OF FRAUD OR OTHER DEFENSE-CONTRACT-RELATED FELONIES (MAR 1999)

(a) Definitions. As used in this clause—

(1) "Arising out of a contract with the DoD" means any act in connection with—

(i) Attempting to obtain;

(ii) Obtaining, or

(iii) Performing a contract or first-tier subcontract of any agency, department, or component of the Department of Defense (DoD).

(2) "Conviction of fraud or any other felony" means any conviction for fraud or a felony in violation of state or Federal criminal statutes, whether entered on a verdict or plea, including a plea of *nolo contendere*, for which sentence has been imposed.

(3) "Date of conviction" means the date judgment was entered against the individual.

(b) Any individual who is convicted after September 29, 1988, of fraud or any other felony arising out of a contract with the DoD is prohibited from serving--

(1) In a management or supervisory capacity on any DoD contract or first-tier subcontract;

(2) On the board of directors of any DoD contractor or first-tier subcontractor;

(3) As a consultant, agent, or representative for any DoD contractor or first-tier subcontractor; or

(4) In any other capacity with the authority to influence, advise, or control the decisions of any DoD contractor or subcontractor with regard to any DoD contract or first-tier subcontract.

(c) Unless waived, the prohibition in paragraph (b) of this clause applies for not less than 5 years from the date of conviction.

(d) 10 U.S.C. 2408 provides that a defense contractor or first-tier subcontractor shall be subject to a criminal penalty of not more than $500,000 if convicted of knowingly—

(1) Employing a person under a prohibition specified in paragraph (b) of this clause; or

(2) Allowing such a person to serve on the board of directors of the contractor or first-tier subcontractor.

(e) In addition to the criminal penalties contained in 10 U.S.C. 2408, the Government may consider other available remedies, such as—

(1) Suspension or debarment;

(2) Cancellation of the contract at no cost to the Government; or

(3) Termination of the contract for default.

(f) The Contractor may submit written requests for waiver of the prohibition in paragraph (b) of this clause to the Contracting Officer. Requests shall clearly identify—

(1) The person involved;

(2) The nature of the conviction and resultant sentence or punishment imposed;

(3) The reasons for the requested waiver; and

(4) An explanation of why a waiver is in the interest of national security.

(g) The Contractor agrees to include the substance of this clause, appropriately modified to reflect the identity and relationship of the parties, in all first-tier subcontracts exceeding the simplified acquisition threshold in Part 2 of the Federal Acquisition Regulation, except those for commercial items or components.

(h) Pursuant to 10 U.S.C. 2408(c), defense contractors and subcontractors may obtain information as to whether a particular person has been convicted of fraud or any other felony arising out of a contract with the DoD by contacting The Office of Justice Programs, The Denial of Federal Benefits Office, U.S. Department of Justice, telephone (202) 616-3507.

(End of clause)

252.204-7003 CONTROL OF GOVERNMENT PERSONNEL WORK PRODUCT (APR 1992)

The Contractor's procedures for protecting against unauthorized disclosure of information shall not require Department of Defense employees or members of the Armed Forces to relinquish control of their work products, whether classified or not, to the contractor.

(End of clause)

252.204-7004 REQUIRED CENTRAL CONTRACTOR REGISTRATION ALTERNATE A (NOV 2003)

(a) Definitions. As used in this clause--

“Central Contractor Registration (CCR) database” means the primary Government repository for contractor information required for the conduct of business with the Government.

“Commercial and Government Entity (CAGE) code” means--

(1) A code assigned by the Defense Logistics Information Service (DLIS) to identify a commercial or Government entity; or

(2) A code assigned by a member of the North Atlantic Treaty Organization that DLIS records and maintains in the CAGE master file. This type of code is known as an “NCAGE code.”

“Data Universal Numbering System (DUNS) number” means the 9-digit number assigned by Dun and Bradstreet, Inc. (D&B) to identify unique business entities.

“Data Universal Numbering System +4 (DUNS+4) number” means the DUNS number assigned by D&B plus a 4-character suffix that may be assigned by a business concern. (D&B has no affiliation with this 4-character suffix.) This 4-character suffix may be assigned at the discretion of the business concern to establish additional CCR

records for identifying alternative Electronic Funds Transfer (EFT) accounts (see Subpart 32.11 of the Federal Acquisition Regulation) for the same parent concern.

“Registered in the CCR database” means that--

(1) The Contractor has entered all mandatory information, including the DUNS number or the DUNS+4 number, into the CCR database;

(2) The Contractor's CAGE code is in the CCR database; and

(3) The Government has validated all mandatory data fields and has marked the records “Active.”

(b)(1) By submission of an offer, the offeror acknowledges the requirement that a prospective awardee shall be registered in the CCR database prior to award, during performance, and through final payment of any contract, basic agreement, basic ordering agreement, or blanket purchasing agreement resulting from this solicitation.

(2) The offeror shall enter, in the block with its name and address on the cover page of its offer, the annotation “DUNS” or “DUNS +4” followed by the DUNS or DUNS +4 number that identifies the offeror's name and address exactly as stated in the offer. The DUNS number will be used by the Contracting Officer to verify that the offeror is registered in the CCR database.

(c) If the offeror does not have a DUNS number, it should contact Dun and Bradstreet directly to obtain one.

(1) An offeror may obtain a DUNS number--

(i) If located within the United States, by calling Dun and Bradstreet at 1-866-705-5711 or via the Internet at http://www.dnb.com; or

(ii) If located outside the United States, by contacting the local Dun and Bradstreet office.

(2) The offeror should be prepared to provide the following information:

(i) Company legal business.

(ii) Tradestyle, doing business, or other name by which your entity is commonly recognized.

(iii) Company Physical Street Address, City, State, and Zip Code.

(iv) Company Mailing Address, City, State and Zip Code (if separate from physical).

(v) Company Telephone Number.

(vi) Date the company was started.

(vii) Number of employees at your location.

(viii) Chief executive officer/key manager.

(ix) Line of business (industry).

(x) Company Headquarters name and address (reporting relationship within your entity).

(d) If the Offeror does not become registered in the CCR database in the time prescribed by the Contracting Officer, the Contracting Officer will proceed to award to the next otherwise successful registered Offeror.

(e) Processing time, which normally takes 48 hours, should be taken into consideration when registering. Offerors who are not registered should consider applying for registration immediately upon receipt of this solicitation.

(f) The Contractor is responsible for the accuracy and completeness of the data within the CCR database, and for any liability resulting from the Government's reliance on inaccurate or incomplete data. To remain registered in the CCR database after the initial registration, the Contractor is required to review and update on an annual basis from the date of initial registration or subsequent updates its information in the CCR database to ensure it is current, accurate and complete. Updating information in the CCR does not alter the terms and conditions of this contract and is not a substitute for a properly executed contractual document.

(g)(1)(i) If a Contractor has legally changed its business name, “doing business as” name, or division name (whichever is shown on the contract), or has transferred the assets used in performing the contract, but has not completed the necessary requirements regarding novation and change-of-name agreements in Subpart 42.12, the Contractor shall provide the responsible Contracting Officer a minimum of one business day's written notification of its intention to (A) change the name in the CCR database; (B) comply with the requirements of Subpart 42.12 of the FAR; and (C) agree in writing to the timeline and procedures specified by the responsible Contracting Officer. The Contractor must provide with the notification sufficient documentation to support the legally changed name.

(ii) If the Contractor fails to comply with the requirements of paragraph (g)(1)(i) of this clause, or fails to perform the agreement at paragraph (g)(1)(i)(C) of this clause, and, in the absence of a properly executed novation or change-of-name agreement, the CCR information that shows the Contractor to be other than the Contractor indicated in the contract will be considered to be incorrect information within the meaning of the “Suspension of Payment” paragraph of the electronic funds transfer (EFT) clause of this contract.

(2) The Contractor shall not change the name or address for EFT payments or manual payments, as appropriate, in the CCR record to reflect an assignee for the purpose of assignment of claims (see FAR Subpart 32.8, Assignment of Claims). Assignees shall be separately registered in the CCR database. Information provided to the Contractor's CCR record that indicates payments, including those made by EFT, to an ultimate recipient other than that Contractor will be considered to be incorrect information within the meaning of the “Suspension of payment” paragraph of the EFT clause of this contract.

(h) Offerors and Contractors may obtain information on registration and annual confirmation requirements via the internet at http://www.ccr.gov or by calling 1-888-227-2423, or 269-961-5757.

(End of clause)

252.205-7000 PROVISION OF INFORMATION TO COOPERATIVE AGREEMENT HOLDERS (DEC 1991)

(a) Definition.

"Cooperative agreement holder" means a State or local government; a private, nonprofit organization; a tribal organization (as defined in section 4(c) of the Indian Self-Determination and Education Assistance Act (Pub. L. 93-268; 25 U.S.C. 450 (c))); or an economic enterprise (as defined in section 3(e) of the Indian Financing Act of 1974 (Pub. L. 93-362; 25 U.S.C. 1452(e))) whether such economic enterprise is organized for profit or nonprofit purposes; which has an agreement with the Defense Logistics Agency to furnish procurement technical assistance to business entities.

(b) The Contractor shall provide cooperative agreement holders, upon their request, with a list of those appropriate employees or offices responsible for entering into subcontracts under defense contracts. The list shall include the business address, telephone number, and area of responsibility of each employee or office.

(c) The Contractor need not provide the listing to a particular cooperative agreement holder more frequently than once a year.

(End of clause)

252.209-7000 ACQUISITION FROM SUBCONTRACTORS SUBJECT TO ONSITE INSPECTION UNDER THE INTERMEDIATE-RANGE NUCLEAR FORCES (INF) TREATY (NOV 1995)

(a) The Contractor shall not deny consideration for a subcontract award under this contract to a potential subcontractor subject to on-site inspection under the INF Treaty, or a similar treaty, solely or in part because of the actual or potential presence of Soviet inspectors at the subcontractor's facility, unless the decision is approved by the Contracting Officer.

(b) The Contractor shall incorporate this clause, including this paragraph (b), in all solicitations and contracts exceeding the simplified acquisition threshold in part 13 of the Federal Acquisition Regulation, except those for commercial items.

(End of clause)

252.209-7004 SUBCONTRACTING WITH FIRMS THAT ARE OWNED OR CONTROLLED BY THE GOVERNMENT OF A TERRORIST COUNTRY (MAR 1998)

(a) Unless the Government determines that there is a compelling reason to do so, the Contractor shall not enter into any subcontract in excess of $25,000 with a firm, or subsidiary of a firm, that is identified, on the List of Parties Excluded from Federal Procurement and Nonprocurement Programs, as being ineligible for the award of Defense contracts or subcontracts because it is owned or controlled by the government of a terrorist country.

(b) A corporate officer or a designee of the Contractor shall notify the Contracting Officer, in writing, before entering into a subcontract with a party that is identified, on the List of Parties Excluded from Federal Procurement and Nonprocurement Programs, as being ineligible for the award of Defense contracts or subcontracts because it is owned or controlled by the government of a terrorist country. The notice must include the name of the proposed subcontractor notwithstanding its inclusion on the List of Parties Excluded From Federal Procurement and Nonprocurement Programs.

(End of clause)

252.219-7003 SMALL, SMALL DISADVANTAGED AND WOMEN-OWNED SMALL BUSINESS SUBCONTRACTING PLAN (DOD CONTRACTS) (APR. 1996)

This clause supplements the Federal Acquisition Regulation 52.219-9, Small, Small Disadvantaged and Women-Owned Small Business Subcontracting Plan, clause of this contract.

(a) *Definitions. Historically black colleges and universities,* as used in this clause, means institutions determined by the Secretary of Education to meet the requirements of 34 CFR 608.2. The term also means any nonprofit research institution that was an integral part of such a college or university before November 14, 1986.

Minority institutions, as used in this clause, means institutions meeting the requirements of section 1046(3) of the Higher Education Act of 1965 (20 U.S.C. 1135d-5(3)). The term also includes Hispanic-serving institutions as defined in section 316(b)(1) of such Act (20 U.S.C. 1059c(b)(1)).

(b) Except for company or division-wide commercial items subcontracting plans, the term *small disadvantaged business,* when used in the FAR 52.219-9 clause, includes historically black colleges and universities and minority institutions, in addition to small disadvantaged business concerns.

(c) Work under the contract or its subcontracts shall be credited toward meeting the small disadvantaged business concern goal required by paragraph (d) of the FAR 52.219-9 clause when:

(1) It is performed on Indian lands or in joint venture with an Indian tribe or a tribally-owned corporation, and

(2) It meets the requirements of 10 U.S.C. 2323a.

(d) Subcontracts awarded to workshops approved by the Committee for Purchase from People Who are Blind or Severely Disabled (41 U.S.C. 46-48), may be counted toward the Contractor's small business subcontracting goal.

(e) A mentor firm, under the Pilot Mentor-Protege Program established under Section 831 of Pub. L. 101-510, as amended, may count toward its small disadvantaged business goal, subcontracts awarded--

(f) The master plan approval referred to in paragraph (f) of the FAR 52.219-9 clause is approval by the Contractor's cognizant contract administration activity.

(g) In those subcontracting plans which specifically identify small, small disadvantaged, and women-owned small businesses, the Contractor shall notify the Administrative Contracting Officer of any substitutions of firms that are not small, small disadvantaged, or women-owned small businesses for the firms listed in the subcontracting plan. Notifications shall be in writing and shall occur within a reasonable period of time after award of the subcontract. Contractor-specified formats shall be acceptable.

(End of clause)

252.223-7001 HAZARD WARNING LABELS (DEC 1991)

(a) "Hazardous material," as used in this clause, is defined in the Hazardous Material Identification and Material Safety Data clause of this contract.

(b) The Contractor shall label the item package (unit container) of any hazardous material to be delivered under this contract in accordance with the Hazard Communication Standard (29 CFR 1910.1200 et seq). The Standard requires that the hazard warning label conform to the requirements of the standard unless the material is otherwise subject to the labeling requirements of one of the following statutes:

(1) Federal Insecticide, Fungicide and Rodenticide Act;

(2) Federal Food, Drug and Cosmetics Act;

(3) Consumer Product Safety Act;

(4) Federal Hazardous Substances Act; or

(5) Federal Alcohol Administration Act.

(c) The Offeror shall list which hazardous material listed in the Hazardous Material Identification and Material Safety Data clause of this contract will be labeled in accordance with one of the Acts in paragraphs (b)(1) through (5) of this clause instead of the Hazard Communication Standard. Any hazardous material not listed will be interpreted to mean that a label is required in accordance with the Hazard Communication Standard.

MATERIAL (If None, Insert "None.")	ACT
_____	_____
_____	_____

(d) The apparently successful Offeror agrees to submit, before award, a copy of the hazard warning label for all hazardous materials not listed in paragraph (c) of this clause. The Offeror shall submit the label with the Material Safety Data Sheet being furnished under the Hazardous Material Identification and Material Safety Data clause of this contract.

(e) The Contractor shall also comply with MIL-STD-129, Marking for Shipment and Storage (including revisions adopted during the term of this contract).

(End of clause)

252.223-7004 DRUG-FREE WORK FORCE (SEP 1988)

(a) Definitions.

(1) "Employee in a sensitive position," as used in this clause, means an employee who has been granted access to classified information; or employees in other positions that the Contractor determines involve national security; health or safety, or functions other than the foregoing requiring a high degree of trust and confidence.

(2) "Illegal drugs," as used in this clause, means controlled substances included in Schedules I and II, as defined by section 802(6) of title 21 of the United States Code, the possession of which is unlawful under chapter 13 of that Title. The term "illegal drugs" does not mean the use of a controlled substance pursuant to a valid prescription or other uses authorized by law.

(b) The Contractor agrees to institute and maintain a program for achieving the objective of a drug-free work force. While this clause defines criteria for such a program, contractors are encouraged to implement alternative approaches comparable to the criteria in paragraph (c) that are designed to achieve the objectives of this clause.

(c) Contractor programs shall include the following, or appropriate alternatives:

(1) Employee assistance programs emphasizing high level direction, education, counseling, rehabilitation, and coordination with available community resources;

(2) Supervisory training to assist in identifying and addressing illegal drug use by Contractor employees;

(3) Provision for self-referrals as well as supervisory referrals to treatment with maximum respect for individual confidentiality consistent with safety and security issues;

(4) Provision for identifying illegal drug users, including testing on a controlled and carefully monitored basis. Employee drug testing programs shall be established taking account of the following:

(i) The Contractor shall establish a program that provides for testing for the use of illegal drugs by employees in sensitive positions. The extent of and criteria for such testing shall be determined by the Contractor based on considerations that include the nature of the work being performed under the contract, the employee's duties, and

efficient use of Contractor resources, and the risks to health, safety, or national security that could result from the failure of an employee adequately to discharge his or her position.

(ii) In addition, the Contractor may establish a program for employee drug testing--

(A) When there is a reasonable suspicion that an employee uses illegal drugs; or

(B) When an employees has been involved in an accident or unsafe practice;

(C) As part of or as a follow-up to counseling or rehabilitation for illegal drug use;

(D) As part of a voluntary employee drug testing program.

(iii) The Contractor may establish a program to test applicants for employment for illegal drug use.

(iv) For the purpose of administering this clause, testing for illegal drugs may be limited to those substances for which testing is prescribed by section 2..1 of subpart B of the "Mandatory Guidelines for Federal Workplace Drug Testing Programs" (53 FR 11980 (April 11, 1988), issued by the Department of Health and Human Services.

(d) Contractors shall adopt appropriate personnel procedures to deal with employees who are found to be using drugs illegally. Contractors shall not allow any employee to remain on duty or perform in a sensitive position who is found to use illegal drugs until such times as the Contractor, in accordance with procedures established by the Contractor, determines that the employee may perform in such a position.

(e) The provisions of this clause pertaining to drug testing program shall not apply to the extent that are inconsistent with state or local law, or with an existing collective bargaining agreement; provided that with respect to the latter, the Contractor agrees those issues that are in conflict will be a subject of negotiation at the next collective bargaining session.

(End of clause)

252.223-7006 PROHIBITION ON STORAGE AND DISPOSAL OF TOXIC AND HAZARDOUS MATERIALS (APR 1993)

(a) "Definitions".

As used in this clause --

(1) "Storage" means a non-transitory, semi-permanent or permanent holding, placement, or leaving of material. It does not include a temporary accumulation of a limited quantity of a material used in or a waste generated or resulting from authorized activities, such as servicing, maintenance, or repair of Department of Defense (DoD) items, equipment, or facilities.

(2) "Toxic or hazardous materials" means:

(i) Materials referred to in section 101(14) of the Comprehensive Environmental Response, Compensation, and Liability Act (CERCLA) of 1980 (42 U.S.C. 9601(14)) and materials designated under section 102 of CERCLA (42 U.S.C. 9602) (40 CFR part 302);

(ii) Materials that are of an explosive, flammable, or pyrotechnic nature; or

(iii) Materials otherwise identified by the Secretary of Defense as specified in DoD regulations.

(b) In accordance with 10 U.S.C. 2692, the Contractor is prohibited from storing or disposing of non-DoD-owned toxic or hazardous materials on a DoD installation, except to the extent authorized by a statutory exception to 10 U.S.C. 2692 or as authorized by the Secretary of Defense or his designee.

(End of clause)

252.225-7012 PREFERENCE FOR CERTAIN DOMESTIC COMMODITIES (MAY 2004)

(a) Definitions. As used in this clause--

(1) Component means any item supplied to the Government as part of an end product or of another component.

(2) End product means supplies delivered under a line item of this contract.

(b) The Contractor shall deliver under this contract only such of the following items, either as end products or components, that have been grown, reprocessed, reused, or produced in the United States, its possessions, or Puerto Rico:

(1) Food.

(2) Clothing.

(3) Tents, tarpaulins, or covers.

(4) Cotton and other natural fiber products.

(5) Woven silk or woven silk blends.

(6) Spun silk yarn for cartridge cloth.

(7) Synthetic fabric, and coated synthetic fabric, including all textile fibers and yarns that are for use in such fabrics.

(8) Canvas products.

(9) Wool (whether in the form of fiber or yarn or contained in fabrics, materials, or manufactured articles).

(10) Any item of individual equipment (Federal Supply Class 8465) manufactured from or containing fibers, yarns, fabrics, or materials listed in this paragraph (b).

(c) This clause does not apply--

(1) To items listed in section 25.104(a) of the Federal Acquisition Regulation (FAR), or other items for which the Government has determined that a satisfactory quality and sufficient quantity cannot be acquired as and when needed at U.S. market prices;

(2) To end products incidentally incorporating cotton, other natural fibers, or wool, for which the estimated value of the cotton, other natural fibers, or wool--

(i) Is not more than 10 percent of the total price of the end product; and (ii) Does not exceed the simplified acquisition threshold in FAR part 2;

(3) To waste and byproducts of cotton or wool fiber for use in the production of propellants and explosives;

(4) To foods that have been manufactured or processed in the United States, its possessions, or Puerto Rico, regardless of where the foods (and any component if applicable) were grown or produced, except that this clause does apply to fish, shellfish, or seafood manufactured or processed in the United States and fish, shellfish, or seafood contained in foods manufactured or processed in the United States;

(5) To chemical warfare protective clothing produced in the countries listed in subsection 225.872-1 of the Defense FAR Supplement; or

(6) To fibers and yarns that are for use in synthetic fabric or coated synthetic fabric (but does apply to the synthetic or coated synthetic fabric itself), if--

(i) The fabric is to be used as a component of an end product that is not a textile product. Examples of textile products, made in whole or in part of fabric, include--

(A) Draperies, floor coverings, furnishings, and bedding (Federal Supply Group 72, Household and Commercial Furnishings and Appliances);

(B) Items made in whole or in part of fabric in Federal Supply Group 83, Textile/leather/furs/apparel/findings/ tents/flags, or Federal Supply Group 84, Clothing, Individual Equipment and Insignia;

(C) Upholstered seats (whether for household, office, or other use); and

(D) Parachutes (Federal Supply Class 1670); or

(ii) The fibers and yarns are para-aramid fibers and yarns manufactured in the Netherlands.

(End of clause)

252.225-7031 SECONDARY ARAB BOYCOTT OF ISRAEL (APR 2003)

(a) Definitions. As used in this provision--

(1) Foreign person means any person (including any individual, partnership, corporation, or other form of association) other than a United States person.

(2) United States person is defined in 50 U.S.C. App. 2415(2) and means--

(i) Any United States resident or national (other than an individual resident outside the United States who is employed by other than a United States person);

(ii) Any domestic concern (including any permanent domestic establishment of any foreign concern); and

(iii) Any foreign subsidiary or affiliate (including any permanent foreign establishment) of any domestic concern that is controlled in fact by such domestic concern.

(b) Certification. If the offeror is a foreign person, the offeror certifies, by submission of an offer, that it--

(1) Does not comply with the Secondary Arab Boycott of Israel; and

(2) Is not taking or knowingly agreeing to take any action, with respect to the Secondary Boycott of Israel by Arab countries, which 50 U.S.C. App. 2407(a) prohibits a United States person from taking.

(End of provision)

252.227-7033 RIGHTS IN SHOP DRAWINGS (APR 1966)

(a) Shop drawings for construction means drawings, submitted to the Government by the Construction Contractor, subcontractor or any lower-tier subcontractor pursuant to a construction contract, showing in detail (i) the proposed fabrication and assembly of structural elements and (ii) the installation (i.e., form, fit, and attachment details) of materials or equipment. The Government may duplicate, use, and disclose in any manner and for any purpose shop drawings delivered under this contract.

(b) This clause, including this paragraph (b), shall be included in all subcontracts hereunder at any tier.

252.231-7000 SUPPLEMENTAL COST PRINCIPLES (DEC 1991)

When the allowability of costs under this contract is determined in accordance with part 31 of the Federal Acquisition Regulation (FAR), allowability shall also be determined in accordance with part 231 of the Defense FAR Supplement, in effect on the date of this contract.

(End of clause)

252.236-7000 MODIFICATION PROPOSALS - PRICE BREAKDOWN. (DEC 1991)

(a) The Contractor shall furnish a price breakdown, itemized as required and within the time specified by the Contracting Officer, with any proposal for a contract modification.

(b) The price breakdown --

(1) Must include sufficient detail to permit an analysis of profit, and of all costs for --

(i) Material;

(ii) Labor;

(iii) Equipment;

(iv) Subcontracts; and

(v) Overhead; and

(2) Must cover all work involved in the modification, whether the work was deleted, added, or changed.

(c) The Contractor shall provide similar price breakdowns to support any amounts claimed for subcontracts.

(d) The Contractor's proposal shall include a justification for any time extension proposed.

252.236-7001 CONTRACT DRAWINGS, MAPS, AND SPECIFICATIONS (AUG 2000)

(a) The Government will provide to the Contractor, without charge, one set of contract drawings and specifications, except publications incorporated into the technical provisions by reference, in electronic or paper media as chosen by the Contracting Officer.

(b) The Contractor shall--

(1) Check all drawings furnished immediately upon receipt;

(2) Compare all drawings and verify the figures before laying out the work;

(3) Promptly notify the Contracting Officer of any discrepancies;

(4) Be responsible for any errors that might have been avoided by complying with this paragraph (b); and

(5) Reproduce and print contract drawings and specifications as needed.

(c) In general--

(1) Large-scale drawings shall govern small-scale drawings; and

(2) The Contractor shall follow figures marked on drawings in preference to scale measurements.

(d) Omissions from the drawings or specifications or the misdescription of details of work that are manifestly necessary to carry out the intent of the drawings and specifications, or that are customarily performed, shall not relieve the Contractor from performing such omitted or misdescribed details of the work. The Contractor shall perform such details as if fully and correctly set forth and described in the drawings and specifications.

(e) The work shall conform to the specifications and the contract drawings identified on the following index of drawings:

NEW MADRID CULVERT REPLACEMENT NO. 3
NEW MADRID, MISSOURI
FILE NUMBER 001A0170-017A0170

INDEX OF DRAWINGS

TITLE	INDEX TO DRAWINGS
Maps and Drawing Index	1
Existing Site Plan	2
Excavation Plan	3
Plan and Section Along CL Pipe	4
Earthwork Sections	5
Final Site Plan	6
Outlet Structure - Concrete	7
Outlet Structure - Reinforcing	8
Outlet - Wall Drain Details	9
Access Bridge Details	10
Access Bridge Details	11
Access Bridge Details	10
Access Bridge Details	11
Access Bridge Details	12
Miscellaneous Details	13
Boring Log	14
Boring Legend	15
Temporary Erosion Control Devices	16
Stage Hydrographs-New Madrid,Mo	17

TITLE	INDEX TO DRAWINGS
Mile 889	

(End of clause)

252.236-7002 OBSTRUCTION OF NAVIGABLE WATERWAYS. (DEC 1991)

(a) The Contractor shall --

(1) Promptly recover and remove any material, plant, machinery, or appliance which the contractor loses, dumps, throws overboard, sinks, or misplaces, and which, in the opinion of the Contracting Officer, may be dangerous to or obstruct navigation;

(2) Give immediate notice, with description and locations of any such obstructions, to the Contracting Officer; and

(3) When required by the Contracting Officer, mark or buoy such obstructions until the same are removed.

(b) The Contracting Officer may --

(1) Remove the obstructions by contract or otherwise should the Contractor refuse, neglect, or delay compliance with paragraph (a) of this clause; and

(2) Deduct the cost of removal from any monies due or to become due to the Contractor; or

(3) Recover the cost of removal under the Contractor's bond.

(c) The Contractor's liability for the removal of a vessel wrecked or sunk without fault or negligence is limited to that provided in sections 15, 19, and 20 of the River and Harbor Act of March 3, 1899 (33 U.S.C. 410 et. seq.).

252.236-7004 PAYMENT FOR MOBILIZATION AND DEMOBILIZATION (DEC 1991)

(a) The Government will pay all costs for the mobilization and demobilization of all of the Contractor's plant and equipment at the contract lump sum price for this item.

(1) Sixty (60) percent of the lump sum price upon completion of the contractor's mobilization at the work site.

(2) The remaining forty (40) percent upon completion of demobilization.

(b) The Contracting Officer may require the Contractor to furnish cost data to justify this portion of the bid if the Contracting Officer believes that the percentages in paragraphs (a) (1) and (2) of this clause do not bear a reasonable relation to the cost of the work in this contract.

(1) Failure to justify such price to the satisfaction of the Contracting Officer will result in payment, as determined by the Contracting Officer, of --

(i) Actual mobilization costs at completion of mobilization;

(ii) Actual demobilization costs at completion of demobilization; and

(iii) The remainder of this item in the final payment under this contract.

(2) The Contracting Officer's determination of the actual costs in paragraph (b)(1) of this clause is not subject to appeal.

252.242-7000 POSTAWARD CONFERENCE (DEC 1991)

The Contractor agrees to attend any postaward conference convened by the contracting activity or contract administration office in accordance with Federal Acquisition Regulation subpart 42.5.

(End of clause)

252.243-7001 PRICING OF CONTRACT MODIFICATIONS (DEC 1991)

When costs are a factor in any price adjustment under this contract, the contract cost principles and procedures in FAR part 31 and DFARS part 231, in effect on the date of this contract, apply.

252.243-7002 REQUESTS FOR EQUITABLE ADJUSTMENT (MAR 1998)

(a) The amount of any request for equitable adjustment to contract terms shall accurately reflect the contract adjustment for which the Contractor believes the Government is liable. The request shall include only costs for performing the change, and shall not include any costs that already have been reimbursed or that have been separately claimed. All indirect costs included in the request shall be properly allocable to the change in accordance with applicable acquisition regulations.

(b) In accordance with 10 U.S.C. 2410(a), any request for equitable adjustment to contract terms that exceeds the simplified acquisition threshold shall bear, at the time of submission, the following certificate executed by an individual authorized to certify the request on behalf of the Contractor:

I certify that the request is made in good faith, and that the supporting data are accurate and complete to the best of my knowledge and belief.

(Official's Name)

(Title)

(c) The certification in paragraph (b) of this clause requires full disclosure of all relevant facts, including--

(1) Cost or pricing data if required in accordance with subsection 15.403-4 of the Federal Acquisition Regulation (FAR); and

(2) Information other than cost or pricing data, in accordance with subsection 15.403-3 of the FAR, including actual cost data and data to support any estimated costs, even if cost or pricing data are not required.

(d) The certification requirement in paragraph (b) of this clause does not apply to----

(1) Requests for routine contract payments; for example, requests for payment for accepted supplies and services, routine vouchers under a cost-reimbursement type contract, or progress payment invoices; or

(2) Final adjustment under an incentive provision of the contract.

252.247-7023 TRANSPORTATION OF SUPPLIES BY SEA (MAY 2002)

(a) Definitions. As used in this clause --

(1) "Components" means articles, materials, and supplies incorporated directly into end products at any level of manufacture, fabrication, or assembly by the Contractor or any subcontractor.

(2) "Department of Defense" (DoD) means the Army, Navy, Air Force, Marine Corps, and defense agencies.

(3) "Foreign flag vessel" means any vessel that is not a U.S.-flag vessel.

(4) "Ocean transportation" means any transportation aboard a ship, vessel, boat, barge, or ferry through international waters.

(5) "Subcontractor" means a supplier, materialman, distributor, or vendor at any level below the prime contractor whose contractual obligation to perform results from, or is conditioned upon, award of the prime contract and who is performing any part of the work or other requirement of the prime contract.

(6) "Supplies" means all property, except land and interests in land, that is clearly identifiable for eventual use by or owned by the DoD at the time of transportation by sea.

(i) An item is clearly identifiable for eventual use by the DoD if, for example, the contract documentation contains a reference to a DoD contract number or a military destination.

(ii) "Supplies" includes (but is not limited to) public works; buildings and facilities; ships; floating equipment and vessels of every character, type, and description, with parts, subassemblies, accessories, and equipment; machine tools; material; equipment; stores of all kinds; end items; construction materials; and components of the foregoing.

(7) "U.S.-flag vessel" means a vessel of the United States or belonging to the United States, including any vessel registered or having national status under the laws of the United States.

(b)(1) The Contractor shall use U.S.-flag vessels when transporting any supplies by sea under this contract.

(2) A subcontractor transporting supplies by sea under this contract shall use U.S.-flag vessels if--

(i) This contract is a construction contract; or

(ii) The supplies being transported are--

(A) Noncommercial items; or

(B) Commercial items that--

(1) The Contractor is reselling or distributing to the Government without adding value (generally, the Contractor does not add value to items that it contracts for f.o.b. destination shipment);

(2) Are shipped in direct support of U.S. military contingency operations, exercises, or forces deployed in humanitarian or peacekeeping operations; or

(3) Are commissary or exchange cargoes transported outside of the Defense Transportation System in accordance with 10 U.S.C. 2643.

(c) The Contractor and its subcontractors may request that the Contracting Officer authorize shipment in foreign-flag vessels, or designate available U.S.-flag vessels, if the Contractor or a subcontractor believes that --

(1) U.S.-flag vessels are not available for timely shipment;

(2) The freight charges are inordinately excessive or unreasonable; or

(3) Freight charges are higher than charges to private persons for transportation of like goods.

(d) The Contractor must submit any request for use of other than U.S.-flag vessels in writing to the Contracting Officer at least 45 days prior to the sailing date necessary to meet its delivery schedules. The Contracting Officer will process requests submitted after such date(s) as expeditiously as possible, but the Contracting Officer's failure to grant approvals to meet the shipper's sailing date will not of itself constitute a compensable delay under this or any other clause of this contract. Requests shall contain at a minimum --

(1) Type, weight, and cube of cargo;

(2) Required shipping date;

(3) Special handling and discharge requirements;

(4) Loading and discharge points;

(5) Name of shipper and consignee;

(6) Prime contract number; and

(7) A documented description of efforts made to secure U.S.-flag vessels, including points of contact (with names and telephone numbers) with at least two U.S.-flag carriers contacted. Copies of telephone notes, telegraphic and facsimile message or letters will be sufficient for this purpose.

(e) The Contractor shall, within 30 days after each shipment covered by this clause, provide the Contracting Officer and the Maritime Administration, Office of Cargo Preference, U.S. Department of Transportation, 400 Seventh Street SW., Washington, DC 20590, one copy of the rated on board vessel operating carrier's ocean bill of lading, which shall contain the following information:

(1) Prime contract number;

(2) Name of vessel;

(3) Vessel flag of registry;

(4) Date of loading;

(5) Port of loading;

(6) Port of final discharge;

(7) Description of commodity;

(8) Gross weight in pounds and cubic feet if available;

(9) Total ocean freight in U.S. dollars; and

(10) Name of the steamship company.

(f) The Contractor shall provide with its final invoice under this contract a representation that to the best of its knowledge and belief--

(1) No ocean transportation was used in the performance of this contract;

(2) Ocean transportation was used and only U.S.-flag vessels were used for all ocean shipments under the contract;

(3) Ocean transportation was used, and the Contractor had the written consent of the Contracting Officer for all non-U.S.-flag ocean transportation; or

(4) Ocean transportation was used and some or all of the shipments were made on non-U.S.-flag vessels without the written consent of the Contracting Officer. The Contractor shall describe these shipments in the following format:

ITEM DESCRIPTION	CONTRACT LINE ITEMS	QUANTITY

TOTAL_____

(g) If the final invoice does not include the required representation, the Government will reject and return it to the Contractor as an improper invoice for the purposes of the Prompt Payment clause of this contract. In the event there has been unauthorized use of non-U.S.-flag vessels in the performance of this contract, the Contracting Officer is entitled to equitably adjust the contract, based on the unauthorized use.

(h) In the award of subcontracts for the types of supplies described in paragraph (b)(2) of this clause, the Contractor shall flow down the requirements of this clause as follows:

(1) The Contractor shall insert the substance of this clause, including this paragraph (h), in subcontracts that exceed the simplified acquisition threshold in part 2 of the Federal Acquisition Regulation.

(2) The Contractor shall insert the substance of paragraphs (a) through (e) of this clause, and this paragraph (h), in subcontracts that are at or below the simplified acquisition threshold in part 2 of the Federal Acquisition Regulation.

(End of clause)

252.247-7024 NOTIFICATION OF TRANSPORTATION OF SUPPLIES BY SEA (MAR 2000)

(a) The Contractor has indicated by the response to the solicitation provision, Representation of Extent of Transportation by Sea, that it did not anticipate transporting by sea any supplies. If, however, after the award of this contract, the Contractor learns that supplies, as defined in the Transportation of Supplies by Sea clause of this contract, will be transported by sea, the Contractor --

(1) Shall notify the Contracting Officer of that fact; and

(2) Hereby agrees to comply with all the terms and conditions of the Transportation of Supplies by Sea clause of this contract.

(b) The Contractor shall include this clause; including this paragraph (b), revised as necessary to reflect the relationship of the contracting parties--

(1) In all subcontracts under this contract, if this contract is a construction contract; or

(2) If this contract is not a construction contract, in all subcontracts under this contract that are for--

(i) Noncommercial items; or

(ii) Commercial items that--

(A) The Contractor is reselling or distributing to the Government without adding value (generally, the Contractor does not add value to items that it subcontracts for f.o.b. destination shipment);

(B) Are shipped in direct support of U.S. military contingency operations, exercises, or forces deployed in humanitarian or peacekeeping operations; or

(C) Are commissary or exchange cargoes transported outside of the Defense Transportation System in accordance with 10 U.S.C. 2643.

(End of clause)

SPECIAL CONTRACT REQUIREMENTS

NEW MADRID, MISSOURI
GRAVITY FLOW CULVERT REPLACEMENT NO. 3
SECTION 00800
SPECIAL CONTRACT REQUIREMENTS

SP 1. EXCLUSION PERIODS IN COMPUTING COMPLETION SCHEDULES

No work will be required during the period between 1 December and 31 May, inclusive. This period has not been considered in computing the time allowed for completion in accordance with the CONTRACT CLAUSE entitled, "Commencement, Prosecution, and Completion of Work". The Contractor may, however, perform work during all or any part of the non-work period provided that he has received prior approval therefor, in writing, from the Contracting Officer. In the event that the Contractor's operations are suspended at the beginning of or during this period, the Contracting Officer reserves the right to direct the Contractor to restore the work area to at least the level of flood protection existing prior to the Contractor's operations in the area, in accordance with the procedures of paragraph SP 27 or SP 29, all at no additional cost to the Government.

SP 2. EXCEPTION TO LIQUIDATED DAMAGES

The Contractor's obligations specified in the CONTRACT CLAUSE entitled, "Commencement, Prosecution, and Completion of Work" and the requirements of Section 02938 ESTABLISHMENT OF TURF are exempt from liquidated damages.

SP 3. RIGHTS-OF-WAY

a. The rights-of-way and easements for the work to be constructed under this contract within the limits indicated on the drawings will be provided by the Government without cost to the Contractor. However, the Contractor shall make his own arrangements with the appropriate owners or organizations for transporting his equipment across, over or under railroad tracks, highways, bridges, private property, and utility lines and shall provide at his own expense any additional right-of-way or easements required to effect such crossings, including insurance requirements of owners. Limits of right-of-way which will be provided by the Government are as indicated on the drawings. The Contractor shall layout the project right-of-way so that the right-of-way is easily identified in the field.

b. The Contractor shall, upon reasonable notice, without expense to the Government and at any time during the progress of the work when not being actively used for contract operations, promptly vacate and clean up any part of the Government grounds that have been allotted to or have been in use by him when directed to do so by the Contracting Officer.

c. The Contractor shall not obstruct any existing roads on the lands controlled by the United States except with the permission of the Contracting Officer, and shall maintain such roads in as good condition as exists at the time of commencement of the work.

d. Any additional right-of-way required for access or for the Contractor's method of operation must be obtained by and at the expense of the Contractor. The Contractor shall submit written evidence to the Contracting Officer that he has obtained the rights-of-way from the property owners. The written evidence shall consist of an authenticated copy of the conveyance under which the Contractor acquired the rights-of-way, prepared and executed in accordance with the laws of the State of Missouri. If temporary rights are obtained by the Contractor, the period of time shall coincide with CONTRACT CLAUSE entitled, "Commencement, Prosecution, and Completion of Work", located in Section 00700, plus a reasonable time for any extension granted for completion of the work. The Contractor shall be solely responsible for any and all damages, claims for damages, and liability of any nature whatsoever arising from or growing out of the use of rights-of-way other than those rights-of-way furnished by the Government.

e. The Contractor shall repair, at his own expense, any and all damage to the existing roads when such damage is a result of his operations on this contract. The Contractor shall also replace, at his own expense, any and all surfacing displaced or damaged by his operations on this contract. The repairs and/or replacement shall be done to the satisfaction of the Contracting Officer.

SP 4. LAYOUT OF WORK

In addition to FAR clause 52.236-17 located in Section 00700, the following additional information is included:

The Contracting Officer may require that work be suspended at any time when location and limit marks established by the Contractor are not reasonably adequate to permit checking of the work. The layout of the baseline and the rights-of-way shall be accomplished by a registered land surveyor licensed in the state of Missouri.

SP 5. PROGRESS CHART

The schedule of work will be in accordance with the progress chart. The progress chart required by provisions of paragraph (a) of the CONTRACT CLAUSE entitled "Schedules for Construction Contracts" shall be prepared on ENG Form 2454, copies of which will be furnished to the Contractor by the Government. THREE COPIES OF THE SCHEDULE WILL BE REQUIRED.

SP 6. SAFETY-RELATED SPECIAL REQUIREMENTS

ALL WORK UNDER THIS CONTRACT SHALL COMPLY WITH THE LATEST VERSION OF U.S. ARMY CORPS OF ENGINEERS SAFETY AND HEALTH REQUIREMENTS

MANUAL, EM 385-1-1, AND OCCUPATIONAL SAFETY AND HEALTH ACT (OSHA) STANDARDS IN EFFECT ON THE DATE OF THE SOLICITATION. NO SEPARATE PAYMENT WILL BE MADE FOR COMPLIANCE WITH EM 385-1-1, NOR FOR COMPLIANCE WITH ANY OF THE OTHER SAFETY RELATED SPECIAL REQUIREMENTS.

a. Accident Investigations and Reporting. Report all accidents immediately to the Contracting Officer. Additionally, the Contractor shall thoroughly investigate the accident and submit the findings of the investigation along with appropriate corrective actions to the Contracting Officer on ENG Form 3394 as soon as possible but no later than two (2) working days following the accident. Implement corrective actions as soon as reasonably possible.

b. Accident Prevention Program. Refer to the CONTRACT CLAUSE entitled, "Accident Prevention (Alternate 1)". Within 15 calendar days after receipt of Notice of Award of the contract, four copies of the Accident Prevention Program shall be submitted to the Contracting Officer for review and approval. Accident prevention programs shall conform to the latest version of the EM 385-1-1, Appendix A. This can be electronically accessed at “http:/www.hq.usace.army.mil/soh/hqusace_soh.htm”. The program shall be prepared in the following format:

(1) An executed LMV Form 358R, Administrative Plan (available upon request).

(2) An executed LMV Form 359R, Activity Hazard Analysis (available upon request).

(3) A copy of company policy statement regarding accident prevention.

(4) When marine plant and equipment are in use under a contract, the method of fuel oil transfer shall be submitted on LMV Form 414R, Fuel Oil Transfer, (available upon request). (Refer to 33 CFR 156.)

The Contractor shall not commence physical work at the site until the program has been approved by the Contracting Officer, or his authorized representative. At the Contracting Officer's discretion, the Contractor may submit his Activity Hazard Analysis for only the first phase of construction provided that it is accompanied by an outline of the remaining phases of construction. All remaining phases shall be submitted and accepted prior to the beginning of work in each phase. Also refer to Section I of EM 3 85-1-1.

c. Daily Inspections. The Contractor shall perform daily safety inspections and record them on the forms approved by the Contracting Officer. Reports of daily inspections shall be maintained at the jobsite. The reports shall be records of the daily inspections and resulting actions. Each report will include, as a minimum, the following:

(1) Phase(s) of construction underway during the inspection.

(2) Locations or areas inspections were made.

(3) Results of inspection, including nature of deficiencies observed and corrective actions taken, or to be taken, date, and signature of the person responsible for its contents.

d. Machinery and Mechanized Equipment. Machinery and mechanized equipment used under this contract shall comply with the following:

(1) When mechanized equipment is operated on floating plant, the Contractor shall provide positive and acceptable means of preventing this equipment from moving or falling into the water. The type of equipment addressed by this clause includes front-end loaders, bulldozers, trucks (both on- and off-road), backhoes, track hoes, and similar equipment. If the Contractor plans to use such equipment on floating plant, an activity hazard analysis must be developed for this feature of work. The plan must include a detailed explanation of the type or types of physical barriers, curbs, structures, etc., which will be incorporated to protect the operator and prevent the equipment from entering the water. Nonstructural warning devices may be considered for situations where the use of structural barriers is determined to be impracticable. The activity hazard analysis must thoroughly address the procedure and be submitted to the Corps for review and acceptance prior to start of this feature of work.

(2) When a rubber-tired front-end loader, bulldozer, etc., is operated on floating plant, either a bumber or curb with a minimum height of one-third of the outside diameter of the largest tire on the equipment, a barge tied alongside, or other means approved in writing by the Contracting Officer shall be used to prevent equipment from moving or falling into the water.

(3) The stability of crawler, truck, and wheel-mounted cranes shall be assured.

(a) The manufacturer's load-rating chart may be used to determine the maximum allowable working load for each particular crane's boom angle provided a test load, with a boom angle of 20 degrees, confirms the manufacturer's load-rating table.

(b) Stability tests are required if:

(i) There is no manufacturer's load-rating chart securely fixed to the operator's cab;

(ii) There has been a change in the boom or other structural members; or

(iii) There has been a change in the counterweight.

The test shall consist of lifting a load with the boom in the least stable undercarriage position and at an angle of 20 degrees above the horizontal. The test shall be conducted under close supervision on a firm, level surface. The load that tilts the machine shall be identified as the test load. The test load moment (in ft-lbs) shall then be calculated by multiplying the horizontal distance (in ft) from the center of rotation of the machine to the test load, times the test load (in lbs). Three-fourths of this test-load moment shall then be used to compute the

maximum allowable operating loads for the boom at 20, 40, 60, and 80 degrees above horizontal. From these maximum allowable operating loads, a curve shall be plotted and posted in the cab of the machine in sight of the operator. These values shall not be exceeded except in the performance test described below. The test load shall never exceed 110 percent of the manufacturer's maximum rated capacity.

(c) In lieu of the test and computations above, the crane may be load tested for stability at each of the four boom positions listed above.

(4) Performance tests shall be performed in accordance with Section 16 of EM 385-1-1. Performance tests shall be conducted after each stability test, when the crane is placed in service on a project, and at least every 12 months.

(5) Inspections shall be made which will ensure a safe and economical operation of both cranes and draglines. Specific inspections and their frequencies are listed on the appropriate checklists noted below. Results of inspections and tests for cranes shall be recorded on the Safety Inspection Check List, LMV Form 326R (available upon request), and inspection results for draglines shall be recorded on LMV Form 373R (available upon request). Copies of the inspections and tests shall be available at the jobsite for review. All stability and performance tests on cranes and all complete dragline inspections shall be witnessed by the Contracting Officer or his authorized representative.

(6) A complete dragline inspection shall be made:

(a) At least annually;

(b) Prior to the dragline being placed in operation; and

(c) After the dragline has been out of service for more than six months.

e. Safety Sign. The Contractor shall furnish, erect, and maintain a safety sign at the site, as located by the Contracting Officer. The sign shall conform to the requirements of this paragraph and the drawing entitled "Safety Sign", included at the end of these Special Contract Requirements. The lettering shall be black and the background white. Upon request, the Government will furnish a decal of the Engineer Castle. The sign shall be erected as soon as practicable, but not later than 15 calendar days after the date established for cornmencement of work. The data required shall be current.

SP 7. CERTIFICATES OF COMPLIANCE

Any certificates required for demonstrating proof of compliance of material with specification requirements shall be executed in four (4) copies. Each certificate shall be signed by an official authorized to certify on behalf of the manufacturing company and shall contain the name and address of the Contractor, the project name and location, and the quantity and date or dates of shipment or delivery to which the certificates apply. Copies of laboratory test reports submitted

with certificates shall contain the name and address of the testing laboratory and the date or dates of the test to which the report applies. Certification shall not be construed as relieving the Contractor from furnishing satisfactory material, if, after tests are performed on selected samples, the material is found not to meet the specific requirements.

SP 8. CONTRACTOR'S CERTIFICATE

Each submittal of shop drawings and materials data shall be accompanied by a certificate, signed by the head of the Quality Control Organization of the prime Contractor, that the prime Contractor has reviewed in detail all shop drawings and materials contained in the submittal and that they are correct and in strict conformance with the contract drawings and specifications except as may be otherwise explicitly stated. The Government will first check for the Contractor's certificate and then review and render approval action or indicate disapproval in those cases where contract requirements are not fulfilled.

SP 9. DAMAGE TO WORK

The responsibility for damage to any part of the permanent work shall be as set forth in the CONTRACT CLAUSE entitled "Permits and Responsibilities". However, if, in the judgment of the Contracting Officer, any part of the permanent work performed by the Contractor is damaged by flood, tornado, or earthquake, which damage is not due to the failure of the Contractor to take reasonable precautions or to exercise sound engineering and construction practices in the conduct of the work, the Contractor shall make the repairs as ordered by the Contracting Officer and full compensation for such repairs will be made at the applicable contract unit or lump sum prices as fixed and established in the contract. If, in the opinion of the Contracting Officer, there are no contract unit or lump sum prices applicable to any part of such work, an equitable adjustment pursuant to the CONTRACT CLAUSE entitled "Changes" will be made as full compensation for the repairs of that part of the permanent work for which there are no applicable contract unit or lump sum prices. Except as herein provided, damage to all work (including temporary construction), utilities, materials, equipment and plant shall be repaired to the satisfaction of the Contracting Officer at the Contractor's expense regardless of the cause of such damage.

SP 10. NOTIFICATION OF AREA ENGINEER BEFORE BEGINNING WORK

At least 7 days before beginning work, the Contractor shall notify Mr. Stephen P. Shankle, Area Engineer, Caruthersville Area Office, 706 Harry S. Truman Boulevard, Caruthersville, Missouri 63830-1268, Telephone No. 901-544-3074 or 573-333-1043. COLLECT CALLS WILL NOT BE ACCEPTED.

SP 11. RETESTING OF CONSTRUCTION MATERIALS

Unless otherwise specified, where the Technical Specifications state that tests will be performed at the expense of the Government, the cost of only the initial test will be borne by the Government. Any retesting due to failure of the materials to meet the requirements in the initial test or any retesting requested by the Contractor shall be performed at the Contractor's expense. The retests shall be at laboratories approved by the Contracting Officer. The costs of retests made at Government laboratories will be deducted from the total amount due the Contractor.

SP 12. VEHICLE WEIGHT LIMITATIONS

Vehicle weight limitations for operation on roads, streets, and bridges may affect the prosecution of work under this contract. The Contractor will be responsible for obtaining all necessary licenses and permits in accordance with the CONTRACT CLAUSE entitled "Permits and Responsibilities".

SP 13. OBSTRUCTIONS

Utilities. All utilities located at the site are to remain in place and operative during the construction. The exact location, depth, and height of utilities shown on drawings shall be verified in the field by the Contractor. At least 10 days before beginning work in the vicinity of a utility, the Contractor shall call the appropriate “Call Before You Dig” number listed below. The Contractor shall exercise special care when working in the vicinity of utilities to prevent damage thereto or injury to the Contractor's employees or others. Any damage to the utilities or interruptions of service occasioned by the Contractor’s operations shall be repaired and the service restored promptly at his expense.

In the event the Contractor elects to have utilities relocated for his own convenience, he shall make his own arrangement with utility owners for the rerouting and replacement to their permanent location after completion of the work adjacent thereto. All costs associated with utility relocation for the Contractor’s convenience shall be at his expense.

CALL BEFORE YOU DIG NUMBERS

Missouri	1-800-344-7483	(1-800-DIG-RITE)

SP 14. NATIONAL POLLUTANT DISCHARGE ELIMINATION SYSTEM (NPDES)

In compliance with the General Permit of the NPDES, the Contracting Officer will file a Notice of Intent (NOI) with the State of Missouri. In addition, the Stormwater Pollution Prevention Plan (SWPPP) required by the General Permit has been prepared and is included at the end of these Special Contract Requirements. The Contractor shall adhere strictly to the erosion control provisions of SWPPP and Section 01130 - ENVIRONMENTAL PROTECTION to minimize sediment discharge into nearby water courses to the maximum extent practicable. Furthermore, the Contractor and all subcontractors shall sign the certification contained in the SWPPP. The

Contractor shall maintain the SWPPP on the construction site at all times. The SWPPP shall take precedence over the technical specifications.

SP 15. TIME EXTENSIONS FOR UNUSUALLY SEVERE WEATHER

a. This provision specifies the procedure for determination of time extensions for unusually severe weather in accordance with the CONTRACT CLAUSE entitled "Default (Fixed-Price Construction)". In order for the Contracting Officer to award a time extension under this clause, the following conditions must be satisfied:

(1). The weather experienced at the project site during the contract period must be found to be unusually severe, that is, more severe than the adverse weather anticipated for the project location during any given month.

(2) The unusually severe weather must actually cause a delay to the completion of the project. The delay must be beyond the control and without the fault or negligence of the Contractor.

b. The following schedule of monthly anticipated adverse weather delays is based on National Oceanic and Atmospheric Administration (NOAA) or similar data for the project location and will constitute the base line for monthly weather time evaluations. The Contractor's progress schedule must reflect these anticipated adverse weather delays in all weather dependent activities.

MONTHLY ANTICIPATED ADVERSE WEATHER DELAY
WORK DAYS BASED ON (5) DAY WORK WEEK

JAN	FEB	MAR	APR	MAY	JUN	JUL	AUG	SEP	OCT	NOV	DEC
(12)	(9)	(8)	(6)	(6)	(5)	(4)	(3)	(5)	(4)	(7)	(10)

c. Upon acknowledgment of the Notice to Proceed (NTP) and continuing throughout the contract, the Contractor will record on the daily CQC report, the occurrence of adverse weather and resultant impact to normally scheduled work. Actual adverse weather delay days must prevent work on critical activities for 50 percent or more of the Contractor's scheduled work day. The number of actual adverse weather delay days shall include days impacted by actual adverse weather (even if adverse weather occurred in previous month), be calculated chronologically from the first to the last day of each month, and be recorded as full days. If the number of actual adverse weather delay days exceeds the number of days anticipated in paragraph b, above, the Contracting Officer will convert any qualifying delays to calendar days, giving full consideration for equivalent fair weather work days, and issue a modification in accordance with the CONTRACT CLAUSE entitled "Default (Fixed-Price Construction)". (ER 415-1-15, Appendix A)

SP 16. STONE SOURCES

a. For a list of quarries that have produced stone that meet the requirements of these specifications, view the website listed below. If a stone source is designated as "New Source," then that source has been tested and the results of those tests have indicated that the stone will meet the material quality requirements. However, the "New Sources" may not have been used; therefore, the stone gradation and quarry production capability may not have been verified. http://155.76.117.11/conops/MVDStoneLST020601.htm

b. Stone may be furnished either from any of the sources posted at the above website, or from any other sources designated by the Contractor and accepted by the Contracting Officer, subject to the conditions hereinafter stated.

c. After the award of the contract, the Contractor shall designate in writing only one source or one combination of sources from which he/she proposes to furnish stone. If the Contractor proposes to furnish stone from a source or sources not posted at the above website, he/she may designate only a single source for stone. Samples for acceptance testing shall be provided as required in the Technical Specifications. If the Contracting Officer does not accept a source for stone, so designated by the Contractor, the Contractor may not propose other sources but shall furnish the stone from a posted source at no additional cost to the Government.

d. In the event that the Contractor proposes to furnish stone from a posted source, and that posted source fails to meet the material quality requirements as set forth in the technical specifications, the Contractor shall identify the reason for the deficiency and shall either rectify the situation or procure stone at another posted quarry. At no time shall stone be accepted that does not fulfill the requirements as described in the technical specifications.

e. Acceptance of a source of stone shall not be construed as acceptance of all material from that source. The right is reserved to reject materials from certain localized areas, zones, strata, or channels, when such materials are unsuitable for stone as determined by the Contracting Officer. Materials produced from a posted source shall meet all the requirements of the Technical Specifications.

SP 17. FIELD OFFICE BUILDING

a. The Contractor shall furnish and maintain a temporary building for the exclusive use of the Government inspectors during the life of the contract. The building shall conform to the following requirements:

Floor Space	Not less than 150 sq. ft.
Height of Ceiling	Not less than 7 feet
Windows	Not less than 4
Doors	At least 1
Type of Floor	Wood or Concrete

The building shall be of light but weatherproof construction. Windows shall be arranged to open and to be fastened from the inside. All door and window openings shall be provided with suitable screens. The door shall be equipped with a durable hasp and padlock. Interior surfaces of exterior walls and ceilings shall be covered with insulating board. An inside storage room of adequate size shall be provided. The Contractor shall furnish an adequate supply of approved drinking water, sufficient electrical outlets for office calculators and equipment, adequate toilet facilities, all electricity required and sufficient fixtures for adequate lighting, and during cold weather shall furnish adequate heat. The field office, its location and all facilities shall be subject to the approval of the Contracting Officer. The building shall also be equipped with air conditioning during hot weather. The office shall be equipped with at least 2 chairs, one desk and two active phone lines.

b. No separate payment will be made for furnishing and maintaining the field office. Such building will remain the property of the Contractor and shall be removed upon completion of the work as provided in the CONTRACT CLAUSE entitled "Operations and Storage Areas."

SP 18. SUBMITTALS

Within 15 calendar days after receipt of notice to proceed, the Contractor shall complete and submit to the Contracting Officer, in duplicate, submittal register ENG Form 4288-R listing all submittals and dates. In addition to those items listed on ENG Form 4288-R, the Contractor shall furnish submittals for any deviation from the plans or specifications. The scheduled need dates must be recorded on the document for each item for control purposes. In preparing the document, adequate time (minimum of 30 days) will be allowed for review and approval and possible resubmittal. Scheduling shall be coordinated with the approved progress schedule. The Contractor's Quality Control representative shall review the listing at least every 30 days and take appropriate action to maintain an effective system. Two (2) copies of updated or corrected listing shall be submitted to the Contracting Officer at least every 60 days. Payment will not be made for any material or equipment which does not comply with contract requirements. An original and four (4) copies of all submittals shall be furnished the Contracting Officer. A completed submittal form, ENG Form 4025-R, shall accompany all submittals. Copies of ENG Form 4025-R and ENG Form 4288-R are included at the end of these Special Contract Requirements. (ER 415-1-10, Appendices A and B)

SP 19. HAUL ROADS

Whenever practical, one-way haul roads shall be used on this contract. Haul roads built and maintained for this work shall comply with the following:

a. One-way haul roads for off-the-road equipment; e.g., belly dumps, scrapers, and off-the-road trucks shall have a minimum usable width of 25 feet. One-way haul roads for over-the-road haulage equipment only (e.g., dump trucks, etc.) may be reduced to a usable width of 15 feet. When the Contracting Officer determines that it is impractical to obtain the required width for one-way haul roads (e.g., a road on top of a levee), a usable width of not less than 10 feet may be

approved by the Contracting Officer, provided a positive means of traffic control is implemented. Such positive means shall be signs, signals, and/or signalman, and an effective means of speed control.

b. Two-way haul roads for off-the-road haulage equipment shall have a usable width of 60 feet. Two-way haul roads for over-the-road haulage equipment only may be reduced to a usable width of 30 feet.

c. Haul roads shall be graded and otherwise maintained to keep the surface free from potholes, ruts, and similar conditions that could result in unsafe operation.

d. Grades and curves shall allow a minimum sight distance of 200 feet for one-way roads and 300 feet for two-way roads. Sight distance is defined as the centerline distance an equipment operator (4.5 feet above the road surface) can see an object 4.5 feet above the road surface. When conditions make it impractical to obtain the required sight distance (e.g., ramps over levees), a positive means of traffic control shall be implemented.

e. Dust abatement shall permit observation of objects on the roadway at a minimum distance of 300 feet.

f. Haul roads shall have the edges of the usable portion marked with posts at intervals of 50 feet on curves and 200 feet maximum elsewhere. Such markers shall extend 6 feet above the road surface and for nighttime haulage be provided with reflectors in both directions.

SP 20. TEMPORARY PROJECT FENCING

Temporary project fencing as required by Paragraph 04.A.04 of EM 385-1-1 will be required on this project.

SP 21. MAINTENANCE OF TRAFFIC

The Contractor shall erect and maintain detour signs and barricades as shown on the contract drawings for the protection of the traveling public.

SP 22. SUNDAY, HOLIDAY AND NIGHT WORK

Sunday and Holiday work will be at the option of the Contractor, but night work will not be permitted unless otherwise authorized by the Contracting Officer.

SP 23. INSURANCE REQUIREMENTS FOR WORK ON GOVERNMENT PROPERTY

a. In accordance with the CONTRACT CLAUSE entitled "Insurance - Work on a Government installation", the Contractor shall procure and maintain during the entire performance period of this contract insurance of at least the minimum amounts set forth below:

Type	Amount
Workmen's Compensation and Employer's Liability Insurance	$100,000 or statutory
Comprehensive: General Liability	$1,000,000 per occurrence
Automobile Liability:	$500,000/$1,000,000
(1) Bodily Injury	$200,000 per person $500,000 per occurrence
(2) Property Damage	$ 50,000 per occurrence

b. Prior to the commencement of work hereunder, the Contractor shall furnish to the Contracting Officer a certificate or written evidence of the above required insurance. The policies evidencing required insurance shall contain an endorsement to the effect that cancellation or any material change in the policies adversely affecting the interests of the Government in such insurance shall not be effective until 30 days after written notice thereof to the Contracting Officer. Policy shall be issued by a carrier duly qualified to provide above coverages in the State of Missouri.

c. The Contractor shall insert the substance of the clause, entitled "Insurance-Work on a Government Installation (FAR 52.228-5), " in subcontracts under this contract that require work on a Government installation and shall require subcontractors to provide and maintain the insurance required above.

SP 24. STORAGE OF EQUIPMENT AND MATERIALS

The Contractor may use areas within the rights-of-way to store materials and equipment necessary for the work of this contract if such storage does not interfere wiht the work.

SP 25. AVAILABILITY AND USE OF UTILITY SERVICES

a. The Contractor shall provide at the site for all work under this contract, the necessary utility services needed for completion of work under this contract.

b. Electricity: All electric current required by the Contractor shall be furnished at his own expense. All temporary connections for electricity shall be subject to the approval of the Contracting Officer. All temporary lines shall be furnished, installed, connected and maintained by the Contractor in a workman-like manner satisfactory to the Contracting Officer, and shall be removed by the Contractor in like manner at his expense prior to completion of the construction.

SP 26. COMMERCIAL WARRANTY

The Contractor agrees that the building and construction materials and building hardware furnished under this contract shall be covered by the most favorable commercial warranty the Contractor gives to any customer for such products and that the rights and remedies provided herein are in addition to and do not limit any rights afforded to the Government by any other clause of this contract. The warranty will take effect immediately after compliance by the Contractor of these specifications, and acceptance of the completed work by the Government.

SP 27. FLOOD EMERGENCY

a. In the event that a threat of flood is considered to exist or to be impending during work under this contract, the Contractor, if ordered, shall perform emergency operations as directed. An equitable adjustment in the contract price will be made in accordance with the CONTRACT CLAUSE entitled "Changes" on account of the additional work required.

b. Should the Contractor, after specific notification by the Contracting Officer that a flood emergency is considered to exist, or to be impending, fail to complete, without delay, the emergency operations as specified in paragraph a above, or should the flood emergency be of such nature that, in the opinion of the Contracting Officer, the Contractor is unable to complete the required emergency operations in time, the Contracting Officer shall have the right to prescribe the location and the order of work by the Contractor for the duration of the flood emergency and to employ the necessary equipment and perform all or any part of such work or to cause all or any part of such work to be performed by others. No payment will be made to the Contractor for any work by the Contracting Officer or by others under the terms of this subparagraph or for added expense to the Contractor occasioned by construction difficulties arising from operations of the Contracting Officer or others under the terms of this subparagraph.

c. The right is reserved by the Contracting Officer to suspend the Contractor's operations for such period or periods of time during threat of impending flood or flood emergency as may be necessary. Intervals during which work is suspended by order of the Contracting Officer under the provisions of this subparagraph will not be counted as part of the contract period.

SP 28. PROTECTION OF MATERIALS AND WORK

The Contractor shall at all times protect and preserve all materials, supplies, and equipment of every description (including property which may be Government-furnished or owned) and all work performed. AT ALL TIMES THE CONTRACTOR SHALL PROTECT THE AREAS BEHIND THE LEVEE FROM HIGH WATER ON THE LEVEE ENTERING THE PROTECTED (LANDSIDE) AREA THROUGH THE BREECHED LEVEE. ADEQUATE DEWATERING SYSTEM SHALL BE PROVIDED AND MAINTAINED. All reasonable requests of the Contracting Officer to enclose or specially protect such property shall be

complied with. If, as determined by the Contracting Officer, material, equipment, supplies, and work performed are not adequately protected by the Contractor, such property may be protected by the Government and the cost thereof may be charged to the Contractor or deducted from any payments due to him.

SP 29. EXISTING FLOOD PROTECTION

The Contractor shall conduct the construction of all work under this contract in such manner that existing flood protection within the limits of the existing embankments is maintained at all times. The embankments shall not be disturbed except as necessary to perform the work. When the work under this contract is completed, flood protection within such areas shall be at least equal to that existing before start of construction.

SP 30. DESIGNATED BILLING OFFICE

The designated billing office for this contract shall be Mr. Stephen P. Shankle, Area Engineer, Caruthersville Area Office, 706 Harry S. Truman Blvd, Caruthersville, Missouri 63830-1268, Telephone No. 901-544-3074 or 573-333-1043. COLLECT CALLS WILL NOT BE ACCEPTED.

-- End of Section 00800--

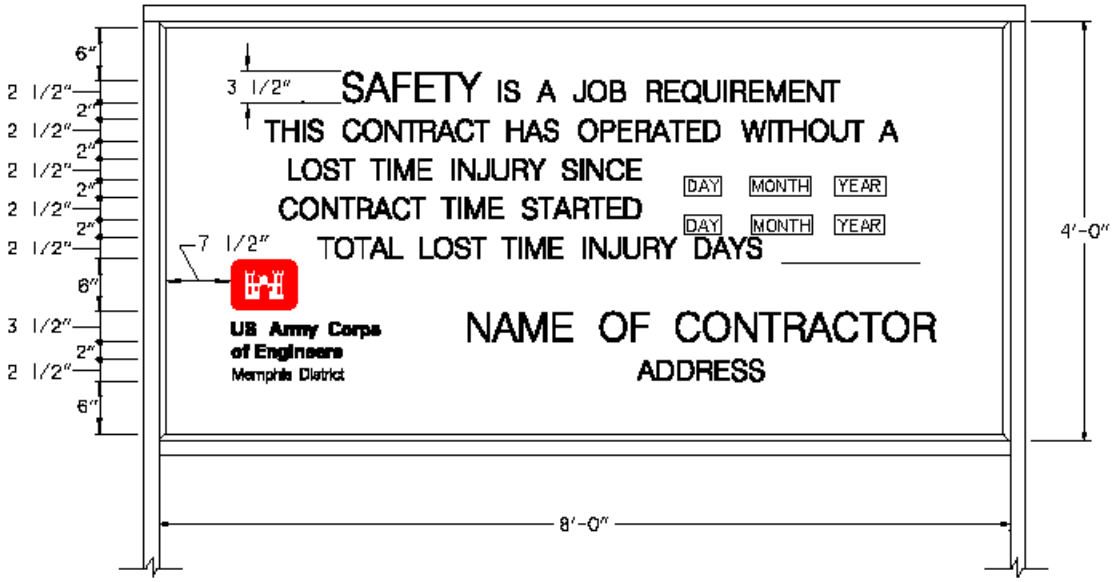

ELEVATION

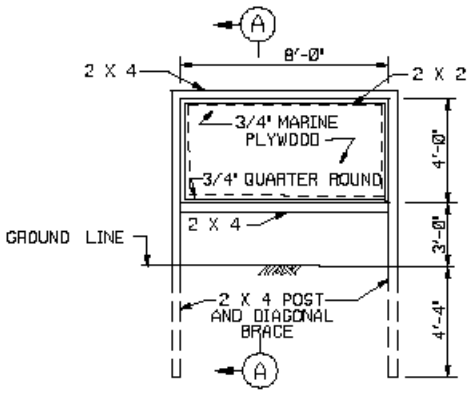

ELEVATION

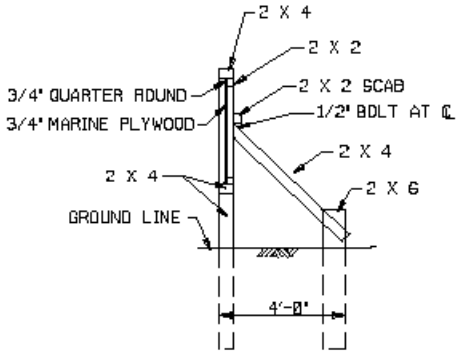

SECTION A-A

NOTES:

1. CONTRACTOR SHALL CONSTRUCT AND MAINTAIN A DURABLE SIGN AS SHOWN.
2. WOOD IN CONTACT WITH GROUND SHALL BE TREATED LUMBER.
3. ALL EXPOSED SURFACES SHALL BE WHITE HOUSE PAINT.
4. LETTERING SHALL BE BLACK.
5. ENGINEER CASTLE DECAL FURNISHED BY GOVERNMENT.
6. 22 GA. SHEET METAL MAY BE USED IN LIEU OF PLYWOOD.

US Army Corps of Engineers
Memphis District

ENGINEER CASTLE DETAIL

SCALE: NONE MARCH 1995

U.S. ARMY ENGINEER DISTRICT, MEMPHIS
CORPS OF ENGINEERS
MEMPHIS, TENNESSEE

SAFETY SIGN

GRAVITY CULVERT REPLACEMENT NO. 3
NEW MADRID COUNTY, MISSOURI
STORM WATER POLLUTION PREVENTION PLAN
FOR STORM WATER GENERAL PERMIT
U.S. ARMY CORPS OF ENGINEERS, MEMPHIS DISTRICT

1.0 LOCATION AND NATURE OF ACTIVITY

This project consists of the replacement of a gravity storm water culvert going through the mainline Mississippi River Levee at New Madrid in New Madrid County, Missouri. A set of construction drawings showing the project location and the details of the culvert replacement will be located on the site at all times.

2.0 AREA AFFECTED

The total area of the site, within the right-of-way limits, which will be impacted by construction, is approximately 3.4 acres.

3.0 CONTROL OF POLLUTANTS DURING CONSTRUCTION

3.1 NON-STRUCTURAL MEASURES

3.1.1 General

Prior to the beginning of any construction, the Contracting Officer will identify all land resources to be preserved within the Contractor's work area. The Contractor shall not remove, cut, deface, injure, or destroy land resources including trees, shrubs, vines, grasses, topsoil, and land forms outside the construction limits without special permission. The Contractor shall provide effective protection for land, water and vegetation resources at all times. The Contractor shall construct or install temporary and/or permanent erosion and sedimentation control features as indicated herein to minimize pollutants entering the Mississippi River, other water bodies or wetlands.

3.1.2 Protection of Landscape

Trees, shrubs, vines, grasses, land forms and other landscape features indicated and defined on the contract drawings or as directed by the Contracting Officer to be preserved shall be clearly identified by marking, fencing, wrapping with boards, or other approved techniques.

3.1.3 Reduction of Exposure of Unprotected Erodible Soils

All earthwork shall be planned and conducted to minimize the duration of exposure of unprotected soils. Vegetative ground cover shall not be destroyed, removed or disturbed more than 20 calendar days prior to grading or earth moving. Clearing shall progress in reasonably sized increments as needed to use the areas developed. To the extent feasible, material

embankments, side slopes, back slopes, berms and any other exposed surfaces shall be stabilized by temporary seeding, mulching, fabric mats or other approved stabilization methods, as soon as possible after material placement, or within 14 days on areas that will remain unfinished more than 21 calendar days. Should construction be halted, for any reason, temporarily or permanently, for more than 21 days, in any portion of the site, temporary or permanent turfing measures, or other approved temporary stabilization of exposed areas, such as mulching, shall be accomplished within 14 days after construction is halted.

3.2 STRUCTURAL MEASURES

3.2.1 General

Temporary erosion and sediment control measures such as silt fences, check dams, and sedimentation basins shall be constructed and maintained until permanent drainage and erosion control facilities are complete and operative. Placement of perimeter controls shall commence with initiation of construction and shall remain in effect during the remainder of construction until final stabilization of those portions of the site upward of the perimeter control. Temporary erosion controls shall be maintained until final stabilization of exposed areas, after which they shall be removed. All structural devices shall be constructed in accordance with the Standard Drawing, TEMPORARY EROSION CONTROL DEVICES.

3.2.2 Silt Fences

If used, silt fences shall be constructed along the channel top bank in any location where stormwater may enter the stream or wetland, along inlet ditches, and any other areas necessary to minimize the entry of excavated material into the Mississippi River.

3.2.3 Check Dams

Check dams shall be constructed across inlet ditches, drains and swales using baled straw or equivalent devices to minimize sediment entry into the stream. Check dams shall be inspected for sediment accumulation after each significant rainfall and sediment removed when it reaches one-half the height of the barrier. Sediment removal shall include removal and disposition in a location where it will not erode into construction areas, water courses or wetlands.

3.2.4 Sediment Basins

Sediment from construction areas with 10 or more disturbed acres at one time shall be trapped in temporary or permanent sediment basins. After each storm, the basins shall be allowed to settle for 24 to 48 hours after which the basins shall be pumped dry. In order to maintain basin effectiveness, accumulated sediment shall be removed when the depth of sediment reaches one-third of the depth of structure in any part of the pool. Overflow shall be controlled by paved weir, by vertical overflow pipe draining from the surface, or by a spillway protected by baled straw filter barriers in the spillway and at the outlet toe of the spillway. The collected topsoil sediment shall be reused for fill

on the construction site, and/or conserved for use at another site(s). If used, the basins shall provide at least 3,600 cubic feet of storage for each acre drained. Where such basins are not used, other equivalent sediment control measures are required.

3.2.5 Other Measures

Other temporary erosion and sediment control measures such as berms, dikes, swales and drains, may be used with, or in lieu of, the above mentioned measures provided they are consistent with Best Management Practices (BMPs). They shall be maintained until permanent drainage and erosion control facilities are complete and operative. Earthen erosion control features shall be compacted and stabilized immediately with vegetation as specified in paragraphs 4.1.3 and 4.1.4.

3.2.6 Velocity Dissipation Devices

Should drains or swales be used, they shall be constructed with velocity dissipation devices (check dams) to reduce the need for more stringent erosion control practices in the swale or drain due to the decreased velocity and energy runoff. These devices shall be removed after the erosive areas have been stabilized.

4.0 CONTROL OF POLLUTANTS AFTER CONSTRUCTION

4.1 ESTABLISHMENT OF TURF

4.1.1 General

Turf shall be established as a permanent erosion control measure along the clearing and excavation reaches and any other areas which are disturbed during construction. All material embankments, all berm areas, and any other disturbed areas shall be turfed. Turf shall be established in accordance with the Contract Specifications.

4.1.2 Fertilizer

Fertilizer shall be distributed uniformly over the areas to be seeded at a rate which will supply not less than 40 pounds of available nitrogen, 40 pounds of available phosphorous, and 40 pounds of potash per acre.

4.1.3 Seeding

Seed sown for permanent turfing shall be as specified in the technical specifications. Temporary seeding shall consist of grasses appropriate for the season when they are sown. A satisfactory method of sowing shall be employed, using approved mechanical power-drawn seeders, mechanical hand-seeders, broadcast-seeders, or other approved methods. When conditions are such by reason of drought, high winds, excessive moisture, or other factors that satisfactory results are not likely to be obtained, work shall be halted as directed and resumed only when conditions are favorable or when approved alternative or corrective measures and procedures have been effected. If inspection either

during seeding operations or after there is a show of green indicates that areas have been left unplanted, additional seed shall be sown.

4.1.4 Mulching

If used, mulch shall be materials that do not contain noxious grass or weed seed that might be detrimental to the turfing being established or to adjacent farmland. Mulch shall be spread uniformly in a continuous blanket, using 2 tons per acre of straw mulch or 1,200 pounds per acre of wood cellulose fiber mulch.

4.2 STATE AND LOCAL CONTROLS

There are no known State or local erosion and sediment control requirements applicable to this work other than those met by the requirements of this permit.

5.0 RUNOFF COEFFICIENT, IMPERVIOUS AREAS, SOILS

The runoff coefficient immediately after construction is estimated to range between 0.10 and 0.30. Once the material embankment and other disturbed areas have been re-vegetated, the runoff coefficient should return to pre-construction conditions with no increase in impervious areas. Soils in the area consist of silts and clays with some sand and silty sands.

6.0 RECEIVING WATER

The receiving stream is the Mississippi River located in New Madrid County, Missouri.

7.0 OTHER CONSIDERATIONS

7.1 Construction is not within 1,000 feet of waters classified in 10 CSR 20-7.013, Water Quality Standards, as:

a. Public drinking water supply lakes
b. Outstanding National Resource Waters
c. Outstanding State Resource Waters
d. Streams designated for cold water sport fishery
e. A lake in EPA's Clean Lakes Program

7.2 Construction is not within 100 feet of waters classified as major reservoirs; however, the Mississippi River is a permanent flow stream.

8.0 DEFINITIONS

8.1 Best Management Practices (BMPs) Schedules of activities, prohibitions of practices, maintenance procedures, and other management practices to prevent or reduce the pollution of waters of the State. BMPs also include treatment requirements, operation procedures and practices

to control plant site runoff, spillage or leaks, sludge or waste disposal, or drainage from raw material storage.

8.2 Commencement of Construction The initial disturbance of soils associated with clearing, grading, or excavating activities or other construction activities.

8.3 Drainage Swale A drainage way with a lining of grass, riprap, asphalt, concrete, or other material installed to convey runoff without causing erosion.

8.4 Check Dam Small temporary dams constructed across a swale or drainage ditch to reduce the velocity of runoff flows.

8.5 Final Stabilization All soil disturbing activities at the site have been completed, and a uniform perennial vegetative cover with a density of 85% of the cover for the area has been established or equivalent stabilization measures (such as the use of mulches or geo-textiles have been employed).

9.0 CERTIFICATION

"I certify under penalty of law that I understand the terms and conditions of the general National Pollutant Discharge Elimination System (NPDES) permit that authorizes the storm water discharges associated with industrial activity from the construction site identified as part of this certification."

Dennis J. Kamper, Chief, Engineering Division 901-544-3227
Name & Official Title Phone No.

Signature Date Signed

Name & Official Title of Contractor Phone No.

Signature Date Signed

Name & Official Title of Subcontractor Phone No.

Signature Date Signed

Section 00900 - WAGE DETERMINATION

WAGE DETERMINATION

General Decision Number: MO030001 04/16/2004

```
  General Decision Number: MO030001 04/16/2004
  Superseded General Decision Number: MO020001
  State: Missouri
  Construction Types: Heavy and Highway
  Counties: Missouri Statewide.
  HEAVY AND HIGHWAY CONSTRUCTION PROJECTS
  Modification Number     Publication Date
              0             06/13/2003
              1             04/02/2004
              2             04/16/2004
  CARP0007-008 04/01/2001
  CASS (Richards-Gebauer AFB ONLY), CLAY, JACKSON, PLATTE AND RAY
  COUNTIES
                                    Rates          Fringes
    Carpenters:
      CARPENTERS & PILEDRIVERS....$ 25.50             6.88
  ----------------------------------------------------------------
  CARP0008-003 05/01/2002
  ST. LOUIS COUNTY AND CITY
                                    Rates          Fringes
    Carpenter......................$ 28.64             6.83
  ----------------------------------------------------------------
  CARP0011-001 05/01/2002
                                    Rates          Fringes
    Carpenter and Piledriver
      ADAIR, KNOX, PUTNAM,
      SCHUYLER AND SULLIVAN
      COUNTIES....................$ 23.63             6.99
      ATCHISON, ANDREW,
      BATES, CALDWELL,
      CARROLL, DAVIESS,
      DEKALB, GENTRY,
      GRUNDY, HARRISON,
      HENRY, HOLT,
      LIVINGSTON, MERCER,
      NODAWAY, ST. CLAIR,
      SALINE AND WORTH
      COUNTIES....................$ 22.53             6.74
      AUDRAIN (East of
      Hwy.19), RALLS, MARION,
      LEWIS, CLARK AND
      SCOTLAND COUNTIES...........$ 24.03             7.56
      AUDRAIN (West of Hwy
      19), BOONE, COOPER,
      HOWARD......................$ 23.63             6.99
      BARRY, BARTON, CAMDEN,
      CEDAR, CHRISTIAN, DADE,
      DALLAS, DOUGLAS,
      GREENE, HICKORY,
      JASPER, LACLEDE,
      LAWRENCE, MCDONALD,
      NEWTON, OZARK, POLK,
```

STONE, TANEY, VERNON,
WEBSTER AND WRIGHT
COUNTIES.....$ 22.18 6.74
BENTON, MORGAN AND
PETTIS COUNTIES.....$ 22.33 6.99
BOLLINGER, BUTLER, CAPE
GIRARDEAU, DUNKLIN,
MISSISSIPPI, NEW
MADRID, PEMISCOT,
PERRY, STE. GENEVIEVE,
SCOTT, STODDARD AND
WAYNE COUNTIES.....$ 24.56 7.18
BUCHANAN, CLINTON,
JOHNSON AND LAFAYETTE
COUNTIES.....$ 23.18 6.74
CALLAWAY, COLE, MILLER,
MONITEAU, OSAGE.....$ 23.63 6.99
CARTER, HOWELL, OREGON
AND RIPLEY COUNTIES.....$ 23.64 7.18
CHARITON, LINN,
MACON,MONROE, RANDOLPH
AND SHELBY COUNTIES.....$ 23.63 6.99
CRAWFORD, DENT,
GASCONADE, IRON,
MADISON, MARIES,
MONTGOMERY, PHELPS,
PULASKI, REYNOLDS,
SHANNON AND TEXAS
COUNTIES.....$ 23.88 7.56
FRANKLIN COUNTY.....$ 25.93 7.56
JEFFERSON AND ST.
CHARLES COUNTIES.....$ 28.44 7.56
LINCOLN COUNTY.....$ 25.54 7.56
PIKE, ST. FRANCOIS AND
WASHINGTON COUNTIES.....$ 24.59 7.56
WARREN COUNTY.....$ 25.93 6.56

ELEC0001-002 06/01/2002
BOLLINGER, BUTLER, CAPE GIRARDEAU, CARTER, DUNKLIN, FRANKLIN, IRON, JEFFERSON, LINCOLN, MADISON, MISSISSIPPI, NEW MADRID, PEMISCOT, PERRY,REYNOLDS, RIPLEY, ST. CHARLES, ST. FRANCOIS, ST. LOUIS (City and County), STE. GENEVIEVE, SCOTT, STODDARD, WARREN, WASHINGTON AND WAYNE COUNTIES

	Rates	Fringes
Electrician	$ 29.20	15.64

ELEC0002-001 12/01/2002
ADAIR, AUDRAIN, BOONE, CALLAWAY, CAMDEN, CARTER, CHARITON, CLARK, COLE, COOPER, CRAWFORD, DENT, FRANKLIN, GASCONADE, HOWARD, HOWELL, IRON, JEFFERSON, KNOX, LEWIS, LINCON, LINN, MACON, MARIES, MARION, MILLER, MONITEAU, MONROE, MONTGOMERY, MORGAN, OREGON, OSAGE, PERRY, PHELPS, PIKE, PULASKI, PUTNAM, RALLS, RANDOLPH, REYNOLDS, RIPLEY, ST. CHARLES, ST. FRANCOIS, ST. LOUIS (City and County), STE. GENEVIEVE, SCHUYLER, SCOTLAND, SHANNON, SHELBY, SULLIVAN, TEXAS, WARREN AND WASHINGTON COUNTIES

	Rates	Fringes
Line Construction:		
Groundman Equipment		

```
    Operator....................$ 25.32      3.25+41.30%
    Groundman, Groundman
    Driver......................$ 20.04      3.25+41.30%
    Groundman-Winch Driver......$ 20.81      3.25+41.30%
    Groundmen Equipment
    Operator....................$ 25.32      3.25+41.30%
    Lineman and Cable
    Splicer.....................$ 28.28      3.25+41.30%
-----------------------------------------------------------------
ELEC0053-004 08/27/2000
                                  Rates          Fringes
  Line Construction:
    ANDREW, ATCHINSON,
    BARRY, BARTON,
    BUCHANAN, CALDWELL,
    CEDAR, CHRISTIAN,
    CLINTON, DADE, DALLAS,
    DAVIESS, DE KALB,
    DOUGLAS, GENTRY,
    GREENE, GRUNDY,
    HARRISON, HICKORY,
    HOLT, JASPER, LACLEDE,
    LAWRENCE, LIVINGSTON,
    McDONALD, MERCER,
    NEWTON, NODAWAY, OZARK,
    POLK, ST. CLAIR, STONE,
    TANEY, VERNON, WEBSTER,
    WORTH, AND WRIGHT
    COUNTIES.
      Groundman Powderman.......$ 18.69             7.37
      Groundman.................$ 17.30             6.98
      Lineman Operator..........$ 25.41             9.30
      Lineman...................$ 26.75             9.69
    BATES, BENTON, CARROLL,
    CASS, CLAY, HENRY,
    JACKSON, JOHNSON,
    LAFAYETTE, PETTIS,
    PLATTE, RAY, AND SALINE
    COUNTIES.
      Groundman Powderman.......$ 19.45             7.59
      Groundman.................$ 18.49             7.31
      Lineman Operator..........$ 25.97             9.46
      Lineman...................$ 27.80             9.99
-----------------------------------------------------------------
ELEC0095-001 06/01/2001
BARRY, BARTON, CEDAR, CRAWFORD, DADE, JASPER, LAWRENCE,
MCDONALD, NEWTON, ST CLAIR, AND VERNON COUNTIES
                                  Rates          Fringes
  Electricians:
    Cable Splicers..............$ 20.86             5.68
    Electricians................$ 20.51             5.68
-----------------------------------------------------------------
ELEC0124-007 09/29/2003
BATES, BENTON, CARROLL, CASS, CLAY, COOPER, HENRY, JACKSON,
JOHNSON, LAFAYETTE, MORGAN, PETTIS, PLATTE, RAY AND SALINE
COUNTIES:
                                  Rates          Fringes
  Electricians:..................$ 30.73            13.82
-----------------------------------------------------------------
```

```
* ELEC0257-003 03/01/2003
AUDRAIN (Except Cuivre Township), BOONE, CALLAWAY, CAMDEN,
CHARITON, COLE, CRAWFORD, DENT, GASCONADE, HOWARD, MARIES,
MILLER, MONITEAU, OSAGE, PHELPS AND RANDOLPH COUNTIES
                                  Rates          Fringes
  Electricians:
    Cable Splicers..............$ 24.73           12.165
    Electricians................$ 23.73           12.165
----------------------------------------------------------------
ELEC0350-002 12/01/2003
ADAIR, AUDRAIN (East of Highway 19), CLARK, KNOX, LEWIS, LINN,
MACON, MARION, MONROE, MONTGOMERY, PIKE, PUTNAM, RALLS,
SCHUYLER, SCOTLAND, SHELBY AND SULLIVAN COUNTIES
                                  Rates          Fringes
  Electrician...................$ 25.05           10.715
----------------------------------------------------------------
ELEC0453-001 09/01/2001
                                  Rates          Fringes
  Electricians:
    CHRISTIAN, DALLAS,
    DOUGLAS, GREENE,
    HICKORY,HOWELL,
    LACLEDE, OREGON,
    OZARK,POLK,SHANNON,
    WEBSTER AND WRIGHT
    COUNTIES....................$ 20.85         5.37+10%
    PULASKI AND TEXAS
    COUNTIES....................$ 25.50         5.37+10%
    STONE AND TANEY COUNTIES....$ 14.45         4.97+10%
----------------------------------------------------------------
ELEC0545-003 06/01/2002
ANDREW, BUCHANAN, CLINTON, DEKALB, ATCHISON, HOLT, MERCER,
GENTRY, HARRISON, DAVIESS, GRUNDY, WORTH, LIVINGSTON, NODAWAY,
AND CALDWELL COUNTIES
                                  Rates          Fringes
  Electricians:..................$ 26.35             9.54
----------------------------------------------------------------
ELEC0702-004 01/01/2002
BOLLINGER, BUTLER, CAPE GIRARDEAU, DUNKLIN, MADISON,
MISSISSIPPI, NEW MADRID, PEMISCOT, SCOTT, STODDARD AND WAYNE
COUNTIES
                                  Rates          Fringes
  Line Construction:
    Groundman - Class A.........$ 17.07       2.45+25.5%
    Groundman Equipment
    Operator (all crawler
    type equipment D-4 and
    larger).....................$ 24.48       2.45+25.5%
    Lineman.....................$ 28.68       2.45+25.5%
----------------------------------------------------------------
ENGI0101-001 05/01/2003
ANDREW, ATCHISON, BATES, BENTON, BUCHANAN, CALDWELL, CARROLL,
CHARITON, CLINTON, COOPER, DAVIESS, DEKALB, GENTRY, GRUNDY,
HARRISON, HENRY, HOLT, HOWARD, JOHNSON, LAFAYETTE, LINN,
LIVINGSTON, MERCER, NODAWAY, PETTIS, SALINE, SULLIVAN AND WORTH
COUNITES
                                  Rates          Fringes
  Power equipment operators:
    GROUP 1.....................$ 23.15             9.30
```

GROUP 2.....$ 22.75 9.30
GROUP 3.....$ 20.75 9.30

POWER EQUIPMENT OPERATORS CLASSIFICATIONS
GROUP 1: Asphalt roller operator, finish; asphalt paver and spreader; asphalt plant operator; auto grader or trimmer or sub-grader; backhoe; blade operator (all types); boilers - 2; booster pump on dredge; bulldozer operator; boring machine (truck or crane mounted); clamshell operator; concrete mixer paver; concrete plant operator; concrete pump operator; crane operator; derrick or derrick trucks; ditching machine; dragline operator; dredge engineman; dredge operator; drill cat with compressor mounted (self-contained) or similar type self- propelled rotary drill (not air tract); drilling or boring machine (rotary-self-propelled); finishing machine operator; greaser; high loader-fork lift-skid loader (all types); hoisting engineer (2 active drums); locomotive operator (standard guage); mechanics and welders (field and plants); mucking machine operator; pile drive operator; pitman crane or boom truck (all types); push cat; quad track; scraper operators (all types); shovel operator; sideboom cats; side discharge spreader; skimmer scoop operators; slip form paver operator (CMI, Rex, Gomeco or equal); la tourneau rooter (all tiller types); tow boat operator; truck crane; wood and log chippers (all types).
GROUP 2: A-frame truck operator; articulated dump truck; back filler operator; boilers (1); chip spreader; churn drill operator; compressor; concrete mixer operator, skip loader; concrete saws (self-propelled); conveyor operator; crusher operator; distributor operator; elevating grader operator; farm tractor (all attachments); fireman rig; float operator; form grade operator; hoisting engine (one drum); maintenance operator; multiple compactor; pavement breaker, self-propelled hydra-hammer (or similar type); paymill operator; power shield; pumps; roller operator (with or without blades); screening and washing plant; self-propelled street broom or sweeper; siphons and jets; straw blower; stump cutting machine; siphons and jets; tank car heater operator (combination boiler and booster); welding machine; vibrating machine operator (not hand held); welding machine.
GROUP 3: Oiler; oiler driver; mechanic.
HOURLY PREMIUMS:
THE FOLLOWING CLASSIFICATIONS SHALL RECEIVE ($ .25) ABOVE GROUP 1 RATE: Dragline operator - 3 yds. & over; shovel 3 yds. & over; clamshell 3 yds. & over; Crane, rigs or piledrivers, 100' of boom or over (incl. jib.), hoist - each additional active drum over 2 drums
THE FOLLOWING CLASSIFICATIONS SHALL RECEIVE ($ .50) ABOVE GROUP 1 RATE: Tandem scoop operator; crane, rigs or piledrivers 150' to 200' of boom (incl. jib.)
THE FOLLOWING CLASSIFICATIONS SHALL RECEIVE ($ .75) ABOVE GROUP 1 RATE: Crane rigs, or piledrivers 200 ft. of boom or over (including jib.)

ENGI0101-005 03/01/2004
CASS, CLAY, JACKSON,PLATTE AND RAY COUNTIES

	Rates	Fringes
Power equipment operators:		
GROUP 1	$ 25.59	10.17
GROUP 2	$ 24.55	10.17

GROUP 3.....$ 20.08 10.17
GROUP 4.....$ 23.43 10.17

POWER EQUIPMENT OPERATORS CLASSIFICATIONS

GROUP 1: Asphalt roller operator, finish; asphalt paver and spreader; asphalt plant operator; auto grader or trimmer or sub-grader; backhoe; blade operator (all types); boilers-2; booster pump on dredge; boring machine (truck or crane mounted); bulldozer operator; clamshell operator; concrete cleaning decontamination machine operator; concrete mixer paver; concrete plant operator; concrete pump operator; crane operator; derrick or derrick trucks; ditching machine; dragline operator; dredge engineman; dredge operator; drillcat with compressor mounted (self-contained) or similar type self propelled rotary drill (not air tract); drilling or boring machine (rotary - self-propelled); finishing machine operator; greaser; heavy equipment robotics operator/mechanic; horizontal directional drill operator; horizontal directional drill locator; loader-forklift - skid loader (all types); hoisting engineer (2 active drums); locomotive operator (standard guage); master environmental maintenance mechanic; mechanics and welders (field and plants); mucking machine operator; piledrive operator; pitman crane or boom truck (all types); push cat; quad-track; scraper operators (all types); shovel operator; side discharge spreader; sideboom cats; skimmer scoop operator; slip-form paver (CMI, REX, Gomaco or equal); la tourneau rooter (all tiller types); tow boat operator; truck crane; ultra high perssure waterjet cutting tool system operator/mechanic; vacuum blasting machine operator/mechanic; wood and log chippers (all types)

GROUP 2: "A" Frame truck operator; articulated dump truck; back filler operator; boilers (1); chip spreader;churn drill operator; concrete mixer operator, skip loader; concrete saws (self-propelled); conveyor operator; crusher operator; distributor operator; elevating grader operator; farm tractor (all attachments); fireman rig; float operator; form grader operator; hoisting engine (1 drum); maintenance operator; multiple compactor; pavement breaker, self-propelled hydra-hammer (or similar type); power shield; paymill operator; pumps; siphons and jets; stump cutting machine; tank car heater operator (combination boiler and booster); compressor; roller operator (with or without blades); screening and washing plant; self-propelled street broom or sweeper; straw blower; tank car heater operator (combination boiler and booster); vibrating machine operator (not hand held)

GROUP 3: Oilers

GROUP 4: Oiler Driver (All Types)

FOOTNOTE:

HOURLY PREMIUMS FOLLOWING CLASSIFICATIONS SHALL RECEIVE ($.25) ABOVE GROUP 1 RATE:

Clamshells - 3 yd. capacity or over; Cranes or rigs, 80 ft. of boom or over (including jib); Draglines, 3 yd. capacity or over;

Piledrivers 80 ft. of boom or over (including jib);

Shovels & backhoes, 3 yd. capacity or over.

ENGI0101-022 05/01/2003

BARRY, BARTON, CAMDEN, CEDAR, CHRISTIAN, DADE, DALLAS, DOUGLAS, GREENE, JASPER, LAWRENCE, HICKORY, LACLEDE, MCDONALD, NEWTON,

OZARK, POLK, ST. CLAIR, STONE, TANEY, VERNON, WEBSTER AND WRIGHT COUNTIES and CITY OF SPRINGFIELD

	Rates	Fringes
Power equipment operators:		
GROUP 1	$ 20.92	7.45
GROUP 2	$ 20.57	7.45
GROUP 3	$ 20.37	7.45
GROUP 4	$ 18.32	7.45

POWER EQUIPMENT OPERATORS CLASSIFICATIONS

GROUP 1: Asphalt finishing machine & trench widening spreader; asphalt plant console operator; autograder; automatic slipform paver; backhoe; blade operator - all types; boat operator - tow; boilers-2; central mix concrete plant operator; clamshell operator; concrete mixer paver; crane operator; derrick or derrick trucks; ditching machine; dozer operator; dragline operator; dredge booster pump; dredge engineman; dredge operator; drill cat with compressor mounted on cat; drilling or boring machine rotary self-propelled; highloader; hoisting engine - 2 active drums; launch hammer wheel; locomotive operator; - standard guage; mechanic and welders; mucking machine; off-road trucks; piledriver operator; pitman crane operator; push cat operator; quad trac; scoop operator - all types; shovel operator; sideboom cats; skimmer scoop operators; trenching machine operator; truck crane.

GROUP 2: A-frame; asphalt hot-mix silo; asphalt plant fireman (drum or boiler); asphalt plant man; asphalt plant man; asphalt plant mixer operator; asphalt roller operator; backfiller operator; barber-greene loader; boat operator (bridges and dams); chip spreader; concrete mixer operator - skip loader; concrete plant operator; concrete pump operator; crusher operator; dredge oiler; elevating grader operator; fork lift; greaser-fleet; hoisting engine - 1; locomotive operator - narrow gauge; multiple compactor; pavement breaker; powerbroom - self-propelled; power shield; rooter; side discharge concrete spreader; slip form finishing machine; stumpcutter machine; throttle man; tractor operator (over 50 h.p.); winch truck.

GROUP 3: Boilers - 1; chip spreader (front man); churn drill operator; clef plane operator; concrete saw operator (self-propelled); curb finishing machine; distributor operator; finishing machine operator; flex plane operator; float operator; form grader operator; pugmill operator; roller operator, other than high type asphalt; screening & washing plant operator; siphons & jets; sub-grading machine operator; spreader box operator, self-propelled (not asphalt); tank car heater operator (combination boiler & booster); tractor operator (50 h.p. or less); Ulmac, Ulric or similar spreader; vibrating machine operator, not hand;

GROUP 4: Grade checker; Oiler; Oiler-Driver

HOURLY PREMIUMS:

The following classifications shall receive $ .25 above GROUP 1 rate:

Clamshells - 3 yds. or over; Cranes - Rigs or Piledrivers, 100 ft. of boom or over (including jib);

Draglines - 3 yds. or over; Hoists - each additional active drum over 2 drums; Shovels - 3 yds. or over;

The following classifications shall receive $ .50 above GROUP 1 rate:

Tandem scoop operator; Cranes - Rigs or Piledrivers, 150 ft. to 200 ft. of boom (including jib); Tandem scoop.
The following classifications shall receive $ .75 above GROUP 1 rate:
Cranes - Rigs or Piledrivers, 200 ft. of boom or over (including jib.).

ENGI0513-004 05/07/2003
FRANKLIN, JEFFERSON, LINCOLN, ST CHARLES, AND WARREN COUNTIES

	Rates	Fringes
Power equipment operators:		
GROUP 1	$ 25.27	13.00
GROUP 2	$ 23.97	13.00
GROUP 3	$ 20.97	13.00
GROUP 4	$ 23.52	13.00

POWER EQUIPMENT OPERATORS CLASSIFICATIONS
GROUP 1: Backhoe, Cable; Backhoe, Hydraulic (2 cu yds bucket and under regardless of attachment, one oiler for 2 or 3, two oilers for 4 through 6); Backhoe, Hydraulic over 2 cu yds; Cableway; Crane, Crawler or Truck; Crane, Hydraulic - Truck or Cruiser mounted, 16 tons and over; Crane, Locomotive; crane with boom including jib over 100 ft from pin to pin; Crane using rock socket tool; Derrick, Steam; Derrick Car and Derrick Boat; Dragline, 7 cu yds and over; Dredge; Gradall, Crawler or tire mounted; Locomotive, Gas, Steam & other powers; Pile Driver, Land or Floating; Scoop, Skimmer; Shovel, Power (Electric, Gas, Steam or other powers); Shovel, Power (7 cu yds and over); Switch Boat; Whirley; Air Tugger with air compressor; Anchor Placing Barge; Asphalt Spreaker; Athey Force Feeder Loader, self-propelled; Backfilling Machine; Boat Operator - Push Boat or Tow Boat (job site); Boiler, High Pressure Breaking in Period; Boom Truck, Placing or Erecting; Boring Machine, Footing Foundation; Bullfloat; Cherry Picker; Combination Concrete Hoist and Mixer (such as Mixermobile); Compressor, Two 125 CFM and under; Compressor, Two through Four over 125 CFM; Compressor when operator runs throttle; Concrete Breaker (Truck or Tractor mounted); Concrete Pump (such as Pumpcrete machine); Concrete Saw (self-propelled); Concrete Spreader; Conveyor, Large (not selfpropelled) hoisting or moving brick and concrete into, or into and on floor level, one or both; Crane, Cimbing (such as Linden); Crane, Hydraulic - Rough Terrain, self-propelled; Crane, Hydraulic - Truck or Cruiser mounted - under 16 tons; Drilling machine - Self-powered, used for earth or rock drilling or boring (wagon drills and any hand drills obtaining power from other souces including concrete breakers, jackhammers and Barco equipmnet no engineer required); Elevating Grader; Engine Man, Dredge; Excavator or Powerbelt Machine; Finishing Machine, self- propelled oscillating screed; Forklift; Generators, Two through Six 30 KW or over; Grader, Road with power blade; Greaser; Highlift; Hoist, Concrete and Brick (Brick cages or concrete skips operating or on tower, Towermobile, or similar equipment); Hoist, Three or more drums in use; Hoist, Stack; Hydro-Hammer; Lad-A-Vator, hoisting brick or concrete; Loading Machine such as Barber-Greene; Mechanic on job site
GROUP 2: Air Tugger with plant air; Boiler (for power or heating shell of building or temporary enclosures in connection with construction work); Boiler, Temporary;

Compressor, One over 125 CFM; Compressor, truck mounted; Conveyor, Large (not self- propelled); Conveyor, Large (not self- propelled) moving brick and concrete (distributing) on floor level; Curb Finishing Machine; Ditch Paving Machine; Elevator (outside); Endless Chain Hoist; Fireman (as required); Form Grader; Hoist, One Drum regardless of size (except brick or concrete); Lad-A-Vator, other hoisting; Manlift; Mixer, Asphalt, over 8 cu ft capacity; Mixer, one bag capacity or less; Mixer, without side loader, two bag capacity or more; Mixer, with side loader, regardless of size, not Paver; Mud Jack (where mud jack is used in conjenction with an air compressor, operator shall be paid $ .55 per hour in addition to his basic hourly rate for covering both operations); Pug Mill operator; Pump, Sump - self powered, automatic controlled over 2"; Scissor Lift (used for hoisting); Skid Steer Loader; Sweeper, Street; Tractor, small wheel type 50 HP and under with grader blade and similar equipment; Welding Machine, One over 400 amp; Winch, operating from truck

GROUP 3: Boat operator - outboard motor, job site; Conveyors (such as Con-Vay-It) regardless of how used; Elevator (inside); Heater operator, 2 through 6; Sweeper, Floor

GROUP 4: Crane type

HOURLY PREMIUMS:

Backhoe, Hydraulic 2 cu yds or less without oiler - $2.00;
Certified Crane Operator - $1.50;
Certified Hazardous Material Operator $1.50;
Crane,climbing (such as Linden) - $.50;
Crane, Pile Driving and Extracting - $ .50
Crane with boom (including job) over 100 ft from pin to pin - add $.01 per foot to maximum of $4.00);
Crane, using rock socket tool - $ .50;
Derrick, diesel, gas or electric hoisting material and erecting steel (150 ft or more above ground) - $ .50;
Dragline, 7 cu yds and over - $ .50;
Hoist, Three or more drums in use - $ .50;
Scoop, Tandem - $.50;
Shovel, Power - 7 cu yds and over - $ .50;
Tractor, Tandem Crawler - $ .50;
Tunnel, man assigned to work in tunnel or tunnel shaft - $ .50;
Wrecking, when machines are working on second floor or higher - $ .50

ENGI0513-006 05/01/2003

ADAIR, AUDRAIN, BOLLINGER, BOONE, BUTLER, CALLAWAY, CAPE GIRARDEAU, CARTER, CLARK, COLE, CRAWFORD, DENT, DUNKLIN, GASCONADE, HOWELL, IRON, KNOX, LEWIS, MACON, MADISON, MARIES, MARION, MILLER, MISSISSIPPI, MONITEAU, MONROE, MONTGOMERY, MORGAN, NEW MADRID, OREGON, OSAGE, PEMISCOT, PERRY, PHELPS, PIKE, PULASKI, PUTNAM, RALLS, RANDOLPH, REYNOLDS, RIPLEY, ST. FRANCOIS, STE. GENEVIEVE, SCHUYLER, SCOTLAND, SCOTT, SHANNON, SHELBY, STODDARD, TEXAS, WASHINGTON, AND WAYNE COUNTIES

	Rates	Fringes
Power equipment operators:		
GROUP 1	$ 21.70	13.00
GROUP 2	$ 21.35	13.00
GROUP 3	$ 21.15	13.00

GROUP 4.....$ 17.50 13.00

POWER EQUIPMENT OPERATORS CLASSIFICATIONS

GROUP 1: Asphalt finishing machine & trench widening spreader, asphalt plant console operator; autograder; automatic slipform paver; back hoe; blade operator - all types; boat operator tow; boiler two; central mix concrete plant operator; clam shell operator; concrete mixer paver; crane operator; derrick or derrick trucks; ditching machine; dozer operator; dragline operator; dredge booster pump; dredge engineman; dredge operator; drill cat with compressor mounted on cat; drilling or boring machine rotary self-propelled; highloader; hoisting engine 2 active drums; launchhammer wheel; locomotive operator standrad guage; mechanics and welders; mucking machine; piledriver operator; pitman crane operator; push cat operator; guad-trac; scoop operator; sideboom cats; skimmer scoop operator; trenching machine operator; truck crane, shovel operator.

GROUP 2: A-Frame; asphalt hot-mix silo; asphalt roller operator asphalt plant fireman (drum or boiler); asphalt plant man; asphalt plant mixer operator; backfiller operator; barber-greene loader; boat operator (bridge & dams); chip spreader; concrete mixer operator skip loader; concrete plant operator; concrete pump operator; dredge oiler; elevating graded operator; fork lift; grease fleet; hoisting engine one; locomotive operator narrow guage; multiple compactor; pavement breaker; powerbroom self-propelled; power shield; rooter; slip-form finishing machine; stumpcutter machine; side discharge concrete spreader; throttleman; tractor operator (over 50 hp); winch truck; asphalt roller operator; crusher operator.

GROUP 3: Spreader box operator, self-propelled not asphalt; tractor operator (50 h.p. or less); boilers one; chip spreader (front man); churn drill operator; compressor over 105 CFM 2-3 pumps 4" & over; 2-3 light plant 7.5 KWA or any combination thereof; clef plane operator; compressor maintenance operator 2 or 3; concrete saw operator (self-propelled); curb finishing mancine; distributor operator; finishing machine operator; flex plane operator; float operator; form grader operator; pugmill operator; riller operator other than high type asphalt; screening & washing plant operator; siphons & jets; subgrading machine operator; tank car heater (combination boiler & booster); ulmac, ulric or similar spreader; vibrating machine operator; hydrobroom.

GROUP 4: Oiler; grout machine; oiler driver; compressor over 105 CFM one; conveyor operator one; maintenance operator; pump 4" & over one.

FOOTNOTE: HOURLY PREMIUMS

Backhoe hydraulic, 2 cu. yds. or under Without oiler - $2.00
Certified Crane Operator - $1.50;
Certified Hazardous Material Operator $1.50;
Crane, climbing (such as Linden) - $0.50;
Crane, pile driving and extracting - $0.50;
Crane, with boom (including jib) over 100' from pin to pin add $0.01 per foot to maximum of $4.00;
Crane, using rock socket tool - $0.50;
Derrick, diesel, gas or electric, hoisting material and erecting steel (150' or more above the ground) - $0.50;
Dragline, 7 cu. yds, and over - $0.50;

Hoist, three or more drums in use - $0.50; Scoop, Tandem - $0.50;
Shovel, power - 7 cu. yds. or more - $0.50;
Tractor, tandem crawler - $0.50;
Tunnel, man assigned to work in tunnel or tunnel shaft - $0.50;
Wrecking, when machine is working on second floor or higher - $0.50;

ENGI0513-007 05/07/2003
ST. LOUIS CITY AND COUNTY

	Rates	Fringes
Power equipment operators:		
GROUP 1	$ 25.27	13.00
GROUP 2	$ 25.27	13.00
GROUP 3	$ 23.37	13.00
GROUP 4	$ 20.37	13.00
GROUP 5	$ 19.91	13.00

POWER EQUIPMENT OPERATORS CLASSIFICATIONS
GROUP 1: Backhoe, cable or hydraulic; cableway; crane crawler or truck; crane, hydraulic-truck or cruiser mounted 16 tons & over; crane locomotive; derrick, steam; derrick car & derrick boat; dragline; dredge; gradall, crawler or tire mounted; locomotive, gas, steam & other powers; pile driver, land or floating; scoop, skimmer; shovel, power (steam, gas, electric or other powers); switch boat; whirley.
GROUP 2: Air tugger w/air compressor; anchor-placing barge; asphalt spreader; athey force feeder loader (self-propelled); backfilling machine; backhoe-loader; boat operator-push boat or tow boat (job site); boiler, high pressure breaking in period; boom truck, placing or erecting; boring machine, footing foundation; bull- float; cherry picker; combination concrete hoist & mixer (such as mixer mobile); compressor (when operator runs throttle); concrete breaker (truck or tractor mounted); concrete pump, such as pump-crete machine; concrete saw (self-propelled), concrete spreader; conveyor, large (not self-propelled), hoisting or moving brick and concrete into, or into and on floor level, one or both; crane, hydraulic-rough terrain, self-propelled; crane hydraulic-truck or cruiser mounted-under 16 tons; drilling machines, self-powered use for earth or rock drilling or boring (wagon drills nd any hand drills obtaining power from other sources including concrete breakers, jackhammers and barco equipment-no engineer required); elevating grader; engineman, dredge; excavator or powerbelt machine; finishing machine, self-propelled oscillating screed; forklift; grader, road with power blade; highlift. greaser; hoist, stack, hydro-hammer; loading machine (such as barber-greene); machanic, on job site; mixer, pipe wrapping machines; plant asphalt; plant, concrete producing or ready-mix job site; plant heating-job site; plant mixing-job site; plant power, generating-job site; pumps, two through six self-powered over 2"; pumps, electric submersible, two through six, over 4"; quad-track; roller, asphalt, top or sub-grade; scoop, tractor drawn; spreader box; sub-grader; tie tamper; tractor-crawler, or wheel type with or without power unit, power take-offs and attachments regardless of size; trenching machine; tunnel boring machine; vibrating machine automatic, automatic propelled; welding machines

(gasoline or diesel) two through six; well drilling machine
GROUP 3: Conveyor, large (not self-propelled); conveyor, large (not self-propelled) moving brick and concrete distributing) on floor level; mixer two or more mixers of one bag capacity or less; air tugger w/plant air; boiler, for power or heating on construction projects; boiler, temporary; compressor (mounted on truck; curb finishing machine; ditch paving machine; elevator; endless chain hoist; form grader; hoist, one drum regardless of size; lad-a-vator; manlift; mixer, asphalt, over 8 cu. ft. capacity, without side loader, 2 bag capacity or more; mixer, with side loader, regardless of size; pug mill operator; pump, sump-self-powered, automatic controlled over 2" during use in connection with construction work; sweeper, street; welding machine, one over 400 amp.; winch operating from truck; scissor lift (used for hoisting); tractor, small wheel type 50 h.p. & under with grader blade & similar equipment
GROUP 4: Boat operator-outboard motor (job site); conveyor (such as con-vay-it) regardless of how used; sweeper, floor
GROUP 5: Oiler on dredge and on truck crane.

HOURLY PREMIUMS:

Backhoe, hydraulic 2 cu. yds. or under without oiler	$2.00
Certified Crane Operator	1.50
Certified Hazardous Material Operator	1.50
Crane, climbing (such as Linden)	.50
Crane, pile driving and extracting	.50
Crane, with boom (including jib) over 100' (from pin to pin) add $.01 per foot to maximum of	4.00
Crane, using rock socket tool	.50
Derrick, diesel, gas or electric, hoisting material and erecting steel (150' or more above ground)	.50
Dragline, 7 cu. yds. and over	.50
Hoist, three (3) or more drums in use	.50
Scoop, Tandem	.50
Shovel, power - 7 cu. yds. or more	.50
Tractor, tandem crawler	.50
Tunnel, man assigned to work in tunnel or tunnel shaft	.50
Wrecking, when machine is working on second floor or higher	.50

IRON0010-012 04/01/2003

	Rates	Fringes
Ironworkers:		

ANDREW, ATCHISON,
BARTON, BATES, BENTON,
CALDWELL, CAMDEN,
CARROLL, CEDER
CHARITON, CHRISTIAN,
CLINTON, COOPER, DADE,
DALLAS, DAVIESS, DE
KALB, GENTRY, GREENE,
GRUNDY, HARRISON,
HENRY, HICKORY, HOLT,
HOWARD, LACLEDE, LINN,
LIVINGSTON, MERCER,

```
    MONITEAU, MORGAN,
    NODAWAY, PETTIS, POLK,
    PUTNAM, RANDOLPH, ST.
    CLAIR, SALINE,
    SULLIVAN, TANEY,
    VERNON, WEBSTER, WRIGHT
    and WORTH Counties; and
    portions of ADAIR,
    BOONE, MACON, MILLER,
    and RANDOLPH Counties.......$ 21.10            13.73
    BUCHANAN, CASS, CLAY,
    JACKSON, JOHNSON,
    LAFAYETTE, PLATTE AND
    RAY Counties................$ 24.10            13.73
-----------------------------------------------------------------
IRON0321-002 12/31/2002
DOUGLAS, HOWELL and OZARK COUNTIES
                                  Rates          Fringes
  Ironworker.....................$ 18.00             8.06
-----------------------------------------------------------------
IRON0396-004 07/31/2002
ST. LOUIS (City and County), ST. CHARLES, JEFFERSON, IRON,
FRANKLIN, LINCOLN, WARREN, WASHINGTON, ST. FRANCOIS, STE.
GENEVIEVE, and REYNOLDS Counties; and portions of MADISON,
PERRY, BOLLINGER, WAYNE, and CARTER Counties
                                  Rates          Fringes
  Ironworker.....................$ 26.54            11.73
-----------------------------------------------------------------
IRON0396-009 08/01/2003
AUDRAIN, CALLAWAY, COLE, CRAWFORD, DENT, GASCONADE, MARIES,
MONTGOMERY, OSAGE, PHELPS, PIKE, PULASKI, TEXAS, and WRIGHT
Counties; and portions of CAMDEN, DOUGLAS, HOWELL, MILLER,
OREGON, BOONE, SHANNON, LACLEDE, MONROE, and RALLS Counties
                                  Rates          Fringes
  Ironworker.....................$ 21.87            13.00
-----------------------------------------------------------------
IRON0577-005 06/01/2002
ADAIR, CLARK, KNOX, LEWIS, MACON, MARION, MONROE, RALLS,
SCHUYLER, SCOTLAND, AND SHELBY COUNTIES
                                  Rates          Fringes
  Ironworker.....................$ 20.85             9.16
-----------------------------------------------------------------
IRON0584-004 06/01/2003
BARRY, JASPER, LAWRENCE, MCDONALD, NEWTON AND STONE Counties
                                  Rates          Fringes
  Ironworkers:...................$ 18.90             8.47
-----------------------------------------------------------------
IRON0782-003 09/01/2003
CAPE GIRARDEAU, MISSISSIPPI, NEW MADRID, SCOTT, & STODDARD
Counties; and portions of BOLLINGER, BUTLER, CARTER, DUNKLIN,
MADISON, PEMISCOT, PERRY, RIPLEY, and WAYNE Counties
                                  Rates          Fringes
  Ironworkers:
    All Other Work..............$ 21.95             9.73
-----------------------------------------------------------------
LABO0042-003 03/03/2003
ST. LOUIS (City and County)
                                  Rates          Fringes
  Laborers:
```

```
    Plumber Laborers............$ 23.97            7.43
-----------------------------------------------------------------
LABO0042-005 03/03/2003
ST. LOUIS (City and County)
                                  Rates          Fringes
  Laborers:
    Dynamiter, Powderman........$ 24.28            7.43
    Laborers, Flagperson........$ 23.78            7.43
    Wrecking....................$ 23.66            7.43
-----------------------------------------------------------------
LABO0424-002 05/01/2003
                                  Rates          Fringes
  Laborers:
    ADAIR, AUDRAIN,
    BOLLINGER, BOONE,
    BUTLER, CALLAWAY, CAPE
    GIRARDEAU, CARTER,
    CHARITON, CLARK, COLE,
    COOPER, CRAWFORD, DENT,
    DUNKLIN, GASCONADE,
    HOWARD, HOWELL, IRON,
    KNOX, LEWIS, LINN,
    MACON, MADISON, MARIES,
    MARION, MILLER,
    MISSISSIPPI, MONITEAU,
    MONROE, NEW MADRID,
    OREGON, OSAGE,
    PEMISCOT, PERRY,
    PHELPS, PIKE, PULASKI,
    PUTNAM, RALLS,
    RANDOLPH, REYNOLDS,
    RIPLEY, ST. FRANCOIS,
    STE. GENEVIEVE,
    SCHUYLER, SCOTLAND,
    SCOTT, SHANNON, SHELBY,
    STODDARD, SULLIVAN,
    TEXAS, WASHINGTON, AND
    WAYNE COUNTIES
      GROUP 1...................$ 20.32            7.03
      GROUP 2...................$ 20.92            7.03
    FRANKLIN COUNTY
      GROUP 1...................$ 21.77            7.03
      GROUP 2...................$ 22.37            7.03
    JEFFERSON COUNTY
      GROUP 1...................$ 21.82            7.03
      GROUP 2...................$ 22.42            7.03
    LINCOLN, MONTGOMERY AND
    WARREN COUNTIES
      GROUP 1...................$ 20.57            7.03
      GROUP 2...................$ 21.17            7.03
  LABORERS CLASSIFICATIONS
  GROUP 1 - General laborer-flagman, carpenter tenders;
  salamander Tenders; Dump Man; Ticket Takers; loading trucks
  under bins, hoppers, and conveyors; track man; cement
  handler; dump man on earth fill; georgie buggie man; material
  batch hopper man; spreader on asphalt machine; material mixer
  man (except on manholes); coffer dams; riprap pavers rock,
  block or brick; scaffolds over ten feet not self-supported
  from ground up; skip man on concrete paving; wire mesh
```

setters on concrete paving; all work in connection with sewer, water, gas, gasoling, oil, drainage pipe, conduit pipe, tile and duct lines and all other pipe lines; power tool operator; all work in connection with hydraulic or general dredging operations; form setters, puddlers (paving only); straw blower nozzleman; asphalt plant platform man; chuck tender; crusher feeder; men handling creosote ties or creosote materials; men working with and handling epoxy material; topper of standing trees; feeder man on wood pulverizers, board and willow mat weavers and cabelee tiers on river work; deck hands; pile dike and revetment work; all laborers working on underground tunnels less than 25 ft. where compressed air is not used; abutement and pier hole men working six (6) ft. or more below ground; men working in coffer dams for bridge piers and footing in the river; barco tamper; jackson or any other similar tamp; cutting torch man; liners, curb, gutters, ditch lines; hot mastic kettlemen; hot tar applicator; hand blade operator; mortar men or brick or block manholes; rubbing concrete, air tool operator under 65 lbs.; caulker and lead man; chain or concrete saw under 15 h.p.; signal Gan; Guard rail and sign erectors.
GROUP 2 - Skilled laborers - Vibrator man; asphalt raker; head pipe layer on sewer work; batterboard man on pipe and ditch work; cliff scalers working from bosun's chairs; scaffolds or platforms on dams or power plants over 10 ft. high; air tool operator over 65 lbs.; stringline man on concrete paving; sandblast man; laser beam man; wagon drill; churn drill; air track drill and all other similar type drills, gunite nozzle man; pressure grout man; screed man on asphalt; concrete saw 15 h.p. and over; grade checker; strigline man on electronic grade control; manhole builder; dynamite man; powder man; welder; tunnel man; waterblaster - 1000 psi or over; asbestos and/or hazardous waste removal and/or disposal

---

LABO0579-005 05/01/2003

	Rates	Fringes
Laborers: (ANDREW, ATCHISON, BARRY, BARTON, BATES, BENTON, CALDWELL, CAMDEN, CARROLL, CEDAR, CHRISTIAN, CLINTON, DADE, DALLAS, DAVIESS, DEKALB, DOUGLAS, GREENE, GENTRY, GRUNDY, HARRISON, HENRY, HICKORY, HOLT, JASPER, JOHNSON, LACLEDE, LAWRENCE, LIVINGSTON, MCDONALD, MERCER, MORGAN, NEWTON, NODAWAY, OZARK, PETTIS, POLK, ST. CLAIR, SALINE, STONE, TANEY, VERNON, WEBSTER, WORTH AND WRIGHT COUNTIES.)		
GROUP 1	$ 17.29	7.24
GROUP 2	$ 17.84	7.24
Laborers: (BUCHANAN AND LAFAYETTE COUNTIES)		
GROUP 1	$ 18.74	7.49

GROUP 2.....$ 19.09 7.49

LABORERS CLASSIFICATIONS

GROUP 1: General Laborers - Carpenter tenders; salamander tenders; loading trucks under bins; hoppers & conveyors; track men & all other general laborers; air tool operator; cement handler-bulk or sack; dump man on earth fill; georgie buggie man; material batch hopper man; material mixer man (except on manholes); coffer dams; riprap pavers - rock, block or brick; signal man; scaffolds over ten feet not self-supported from ground up; skipman on concrete paving; wire mesh setters on concrete paving; all work in connection with sewer, water, gas, gasoline, oil drainage pipe, conduit pipe, tile and duct lines and all other pipe lines; power tool operator, all work in connection with hydraulic or general dredging operations; puddlers (paving only); straw blower nozzleman; asphalt plant platform man; chuck tender; crusher feeder; men handling creosote ties or creosote materials; men working with and handling epoxy material or materials (where special protection is required); rubbing concrete; topper of standing trees; batter board man on pipe and ditch work; feeder man on wood pulverizers; board and willow mat weavers and cable tiers on river work; deck hands; pile dike and revetment work; all laborers working on underground tunnels less than 25 feet where compressed air is not used; abutment and pier hole men working six (6) feet or more below ground; men working in coffer dams for bridge piers and footings in the river; ditchliners; pressure groutmen; caulker; chain or concrete saw; cliffscalers working from scaffolds, bosuns' chairs or platforms on dams or power plants over (10) feet above ground; mortarmen on brick or block manholes; toxic and hazardous waste work.

GROUP 2: Skilled Laborers - Head pipe layer on sewer work; laser beam man; Jackson or any other similar tamp; cutting torch man; form setters; liners and stringline men on concrete paving, curb, gutters; hot mastic kettleman; hot tar applicator; sandblasting and gunite nozzlemen; air tool operator in tunnels; screed man on asphalt machine; asphalt raker; barco tamper; churn drills; air track drills and all similar drills; vibrator man; stringline man for electronic grade control; manhole builders-brick or block; dynamite and powder men; grade checker.

LABO0660-006 03/05/2003
ST. CHARLES COUNTY

	Rates	Fringes
Laborers:		
GROUP 1	$ 22.69	7.10
GROUP 2	$ 23.19	7.10

LABORERS CLASSIFICATIONS

GROUP 1: General laborer; carpenter tender; salamander tender; dump man; ticket takers; flagman; loading trucks under bins, hoppers, and conveyors; track men; cement handler; dump man on earth fill; Georgie buggie man; material batch hopper man; spreader on asphalt machine; material mixer man (except on manholes); coffer dams; riprap paver - rock, block, or brick; signal man; scaffolds over 10 ft not self-supported from ground up; skipman on concrete paving; wire mech setters on concrete paving; all work in connection with sewer, water, gas, gasoline, oil, drainage pipe, conduit

pipe, tile and duct lines and all other pipe lines; power tool operator; all work in connection with hydraulic or general dredging operations; form setters; puddlers (paving only); straw blower nozzleman; asphalt plant platform man; chuck tender; crusher feeder; men handling creosote ties or creosote materials; men working with and handling epoxy material; topper of standing trees; feeder man on wood pulverizer; board and willow mat weavers and cable tiers on river work; deck hands; pile dike and revetment work; all laborers working on underground tunnels less than 25 ft where compressed air is not used; abutment and pier hole men working 6 ft or more below ground; men working in coffer dams for bridge piers and footings in the river; Barco tamper, Jackson or any other similar tamp; cutting torch man; liners, curb, gutters, ditchliners; hot mastic kettleman; hot tar applicator; hand blade operators; mortar men on brick or block manholes; rubbing concrete; air tool operator under 65 pounds; caulker and lead man; chain saw under 15 hp; guard rail and sign erectors

GROUP 2: Vibrator man; asphalt raker; hand pipe layer on sewer work; batterboard man on pipe and ditch work; cliff scalers working from Bosun's chairs, scaffolds or platforms on dams or power plants over 10 ft high; air tool operator over 65 pounds;stringline man on concrete paving etc.; sand blast man; laser beam man; wagon drill; churn drill; air track drill and all other similar type drills; gunnite nozzle man; pressure grout man; screed man on asphalt; concrete saw 15 hp and over; grade checker; stringline man on electronic grade control; manhole builder; dynamite man; powder man; welder; tunnel man; waterblaster - 1000 psi and over; asbestos and/or hazardous waste removal and or disposal;

---

* LABO0663-002 04/01/2004

CASS, CLAY, JACKSON, PLATTE AND RAY COUNTIES

	Rates	Fringes
Laborers:		
GROUP 1	$ 22.12	8.09
GROUP 2	$ 23.29	8.09

LABORERS CLASSIFICATIONS

GROUP 1: General laborers, Carpenter tenders, salamander tenders, loading trucks under bins, hoppers and conveyors, track men and all other general laborers, air tool operator, cement handler (bulk or sack), chain or concrete saw, deck hands, dump man on earth fill, Georgie Buggies man, material batch hopper man, scale man, material mixer man (except on manholes), coffer dams, abutments and pier hole men working below ground, riprap pavers rock, black or brick, signal man, scaffolds over ten feet not self-supported from ground up, skipman on concrete paving, wire mesh setters on concrete paving, all work in connection with sewer,water, gas, gasoling, oil, drainage pipe, conduit pipe, tile and duct lines and all other pipelines, power tool operator, all work in connection with hydraulic or general dredging operations, straw blower nozzleman,asphalt plant platform man, chuck tender, crusher feeder, men handling creosote ties on creosote materials, men working with and handling epoxy material or materials (where special protection is required), topper of standing trees, batter board man on pipe and ditch work, feeder man on wood pulverizers, board and willow mat

weavers and cable tiers on river work, deck hands, pile dike and revetment work, all laborers working on underground tunnels less than 25 feet where compressed air is not used, abutment and pier hole men working six (6) feet or more below ground, men working in coffer dams for bridge piers and footings in the river, ditchliners, pressure groutmen, caulker and chain or concrete saw, cliffscalers working from scaffolds, bosuns' chairs or platforms on dams or power plants over (10) feet above ground, mortarmen on brick or block manholes, signal man.

GROUP 2: Skilled Laborer - spreader or screed man on asphalt machine, asphalt raker, grade checker, vibrator man, concrete saw over 5 hp., laser beam man, barco tamper, jackson or any other similar tamp, wagon driller, churn drills, air track drills and other similar drills, cutting torch man, form setters, liners and stringline men on concrete paving, curb, gutters and etc., hot mastic kettleman, hot tar applicator, hand blade operators, mortar men on brick or block manholes, sand blasting and gunnite nozzle men, rubbing concrete, air tool operator in tunnels, head pipe layer on sewer work, manhole builder (brick or block), dynamite and powder men.

PAIN0002-002 09/01/2003
CLARK, FRANKLIN, JEFFERSON, LEWIS, LINCOLN, MARION, PIKE, RALLS, ST. CHARLES, ST. LOUIS (CITY & COUNTY), AND WARREN COUNTIES

	Rates	Fringes
Painters:		
Brush	$ 24.93	8.65
Spray	$ 26.93	8.65

PAIN0002-006 02/01/2003
ADAIR, AUDRAIN, BOONE, CALLAWAY, CHARITON, COLE, GASCONADE, HOWARD, KNOX, LINN, MACON, MONROE, MONTGOMERY, OSAGE, PUTNAM, RANDOLPH, SCHUYLER, SCOTLAND, SHELBY AND SULLIVAN COUNTIES and the City of Booneville.

	Rates	Fringes
Painters:		
Bridges, Dams, Locks or Powerhouses	$ 20.44	5.33
Brush, Roller, Paperhanger, Tapers	$ 18.44	5.33
Sandblasting; Epoxy or Any Two Part Coating; Stage or Other Aerial Work Platforms Over 50 ft. high; Lead Abatement	$ 19.44	5.33
Spray; Water Base Epoxy; Stage Under 50 ft.; Structural Steel (except for stairs and railings)	$ 18.94	5.33
Tapers using Ames or comparable tools (bazooks, etc.)	$ 18.69	5.33

PAIN0003-004 04/01/2000
BATES, BENTON, CALDWELL, CARROLL, CASS, CLAY, CLINTON, COOPER,

DAVIESS, GRUNDY, HARRISON, HENRY, JACKSON, JOHNSON, LAFAYETTE, LIVINGSTON, MERCER, MONITEAU, MORGAN, PETTIS, PLATTE, RAY AND SALINE COUNTIES

	Rates	Fringes
Painters:		
Bazooka; Paperhanger	$ 22.60	6.01
Brush & Roller; Taper	$ 22.10	6.01
Lead Abatement; Sprayman	$ 23.10	6.01
Sandblast (Bridge, Stage, Erected Steel and Storage Bin and Tanks)	$ 23.60	6.01
Sprayman (Storage Bin & Tanks, Elevated Tanks); Stageman (Spray); Bridgeman (Spray); Steelman (Spray)	$ 23.85	6.01
Steeplejack - Spray or Sandblast (other than Elevated Tanks)	$ 27.79	6.01
Steeplejack (other than Elevated Tanks)	$ 26.79	6.01
Storage Bin & Tanks (Roller or Brush); Elevated Tanks (Roller or Brush); Stageman; Beltman; Bridgeman; Steelman; Sand Blast (Base); Elevator Shaft	$ 22.85	6.01

PAIN0098-002 05/01/2000
ANDREW, ATCHISON, BUCHANAN, DE KALB, GENTRY, HOLT, NODAWAY & WORTH COUNTIES

	Rates	Fringes
Painters:		
Brush & Roller	$ 20.50	4.40
Sandblasters	$ 21.50	4.40
Steeple Jack	$ 23.50	4.40

PAIN0203-001 04/01/2002
BARRY, BARTON, CEDAR, CHRISTIAN, DADE, DALLAS, DOUGLAS, GREENE, HICKORY, HOWELL, JASPER, LAWRENCE, MCDONALD, NEWTON, OZARK, POLK, ST. CLAIR, STONE, TANEY, VERNON, WEBSTER and WRIGHT COUNTIES

	Rates	Fringes
Painters:		
Painters	$ 17.58	4.89
Sandblasters & Highman (over 40')	$ 18.13	4.89
Tapers	$ 17.67	4.53

PAIN1265-003 07/01/2003
CAMDEN, CRAWFORD, DENT, LACLEDE, MARIES, MILLER, PHELPS, PULASKI AND TEXAS COUNTIES

	Rates	Fringes
Painters:		
Brush and Roller	$ 18.79	8.12
Lead Abatement	$ 21.04	8.12
Spray	$ 19.29	8.12

```
    Structural Steel,
    Sandblasting and All
    Tank Work...................$ 20.04            8.12
----------------------------------------------------------------
PAIN1292-002 07/01/2001
BOLLINGER, BUTLER, CAPE GIRARDEAU, CARTER, DUNKLIN,
MISSISSIPPI, NEW MADRID, OREGON, PEMISCOT, PERRY, REYNOLDS,
RIPLEY, SCOTT, SHANNON, STODDARD and WAYNE COUNTIES
                                 Rates          Fringes
  Painters:
    Bridges, Stacks & Tanks.....$ 22.89            5.97
    Commercial..................$ 15.44            5.97
    Industrial..................$ 17.94            5.97
    Spray & Abrasive
    Blasting....................$ 17.44            5.97
    Taper (Tools)...............$ 15.69            5.97
    Waterblasting...............$ 17.44            5.97
  Height Rates (All Areas):
  Over 60 ft. $0.50 per hour.
  Under 60 ft. $0.25 per hour.
----------------------------------------------------------------
PAIN1292-003 07/01/2001
IRON, MADISON, ST. FRANCOIS, STE. GENEVIEVE and WASHINGTON
COUNTIES
                                 Rates          Fringes
  Painters:
    Bridges, Stacks & Tanks.....$ 22.89            5.97
    Commercial..................$ 17.54            5.97
    Industrial..................$ 18.54            5.97
    Lead Abatement..............$ 18.29            5.97
    Spray & Abrasive
    Blasting....................$ 19.54            5.97
    Tapers (Tools)..............$ 17.79            5.97
    Waterblasting...............$ 19.54            5.97
  Height Rates (All Areas):
  0ver 60 ft. $0.50 per hour
  Under 60 ft. $0.25 per hour.
----------------------------------------------------------------
PLAS0518-006 04/01/2002
BARRY, BARTON, CEDAR, CHRISTIAN, DADE, DALLAS, DOUGLAS, GREENE,
HOWELL, JASPER, LACLEDE, LAWRENCE, MCDONALD, NEWTON, OZARK,
POLK, STONE, TANEY, VERNON, WEBSTER, AND WRIGHT COUNTIES
                                 Rates          Fringes
  Cement Masons:.................$ 17.31            3.84
----------------------------------------------------------------
PLAS0518-007 03/22/2004
CASS (Richards-Gebaur AFB only), CLAY, JACKSON, PLATTE AND RAY
COUNTIES
                                 Rates          Fringes
  Cement Masons:.................$ 21.25           11.45
----------------------------------------------------------------
PLAS0518-011 05/01/2001
ANDREW, ATCHISON, BUCHANAN, BATES, CALDWELL, CARROLL, CASS
(Except Richards-Gebaur AFB) CLINTON, DAVIESS, DEKALB, GENTRY,
GRUNDY, HARRISON, HOLT, JACKSON, LAFAYETTE, LIVINGSTON, MACON,
MERCER, NODAWAY AND WORTH COUNTIES
                                 Rates          Fringes
  Cement Masons:.................$ 23.13            7.15
----------------------------------------------------------------
```

PLAS0527-001 05/01/2003

	Rates	Fringes
Cement Masons:		
FRANKLIN, LINCOLN, AND WARREN COUNTIES	$ 25.01	9.36
JEFFERSON, ST. CHARLES COUNTIES AND ST. LOUIS (City and County)	$ 26.18	9.36

PLAS0527-004 05/01/2003
CRAWFORD, DENT, IRON, MADISON, MARION, PHELPS, PIKE, PULASKI, RALLS, REYNOLDS, ST. FRANCOIS, STE. GENEVIEVE, SHANNON, TEXAS, WASHINGTON COUNTIES

	Rates	Fringes
Cement Mason	$ 23.70	9.28

PLAS0908-001 05/01/2002
BOLLINGER, BUTLER, CAPE GIRARDEAU, CARTER, DUNKLIN, MISSISSIPPI, NEW MADRID, OREGON, PEMISCOT, PERRY, RIPLEY, SCOTT, STODDARD, AND WAYNE COUNTIES

	Rates	Fringes
Cement Mason	$ 17.40	8.95

PLAS0908-005 03/01/2002
BENTON, CALLAWAY, CAMDEN, COLE, GASCONADE, HENRY, HICKORY, JOHNSON, MARIES, MILLER, MONTGOMERY, MORGAN, OSAGE, PETTIS, SALINE & ST. CLAIR COUNTIES

	Rates	Fringes
Cement Mason	$ 17.81	7.65

PLUM0008-003 06/01/2003

	Rates	Fringes
Plumber		
BATES, BENTON, CARROLL,HENRY, LAFAYETTE, MORGAN , PETTIS,RAY, ST.CLAIR,SALINE and VERNON COUNTIES	$ 26.00	11.61
CASS, CLAY, JACKSON, JOHNSON and PLATTE COUNTIES	$ 28.83	13.22

PLUM0035-002 01/01/2000
CAMDEN, COLE, CRAWFORD, FRANKLIN, JEFFERSON, MARIES, MILLER, MONITEAU, OSAGE, PHELPS, PULASKI, ST. CHARLES, ST. LOUIS (City and County), WARREN and WASHINGTON COUNTIES

	Rates	Fringes
Plumber	$ 26.105	9.74

PLUM0045-003 09/01/2003
ANDREW, ATCHISON, BUCHANAN, CALDWELL, CLINTON, DAVIESS, DEKALB, GENTRY, HARRISON, HOLT, NODAWAY AND WORTH COUNTIES

	Rates	Fringes
Plumbers and Pipefitters	$ 28.20	11.70

PLUM0178-003 11/01/2001
BARRY, CEDAR, CHRISTIAN, DADE, DALLAS, DOUGLAS, GREENE, HICKORY, LACLEDE, LAWRENCE, POLK, STONE, TANEY, WEBSTER, AND

WRIGHT COUNTIES

	Rates	Fringes
Plumbers and Pipefitters.....	$ 22.10	7.37

PLUM0317-002 07/01/1995
BOONE, CALLAWAY, COOPER, HOWARD, AND RANDOLPH COUNTY (Southern half)

	Rates	Fringes
Plumbers and Pipefitters.....	$ 19.18	3.17

PLUM0533-004 06/01/2002
BATES, BENTON, CARROLL, CASS, CLAY, HENRY, HICKORY, JACKSON, JOHNSON, LAFAYETTE, MORGAN, PETTIS, PLATTE, RAY, SALINE, ST. CLAIR AND VERNON COUNTIES

	Rates	Fringes
Pipefitter.....	$ 29.78	11.68

PLUM0562-004 07/01/2002
ADAIR, AUDRAIN, BOLLINGER, BOONE, BUTLER, CALLAWAY,CAMDEN, CAPE GIRARDEAU,CARTER, CHARITON, CLARK, COLE, COOPER, CRAWFORD, DENT, DUNKLIN, FRANKLIN, GASCONADE, GRUNDY, HOWARD, HOWELL, IRON, JEFFERSON, KNOX, LEWIS, LINCOLN, LINN, LIVINGSTON, MACON, MADISON, MARIES, MARION, MERCER, MILLER, MISSISSIPPI, MONITEAU, MONROE, MONTGOMERY, NEW MADRID, OREGON, OSAGE, PEMISCOTT, PERRY, PHELPS, PIKE, PULASKI, PUTNAM, RALLS, RANDOLPH, REYNOLDS, RIPLEY, ST. CHARLES, ST.FRANCOIS, STE. GENEVIEVE, ST. LOUIS, SCHUYLER, SCOTLAND, SCOTT, SHANNON, SHELBY, STODDARD, SULLIVAN, TEXAS, WARREN, WASHINGTON,AND WAYNE COUNTIES.

	Rates	Fringes
Pipefitter.....	$ 28.75	12.08

PLUM0658-002 07/01/1998
BARTON, JASPER, MCDONALD, AND NEWTON COUNTIES

	Rates	Fringes
Plumbers and Pipefitters.....	$ 16.73	5.33

TEAM0013-001 05/01/2002

	Rates	Fringes
Truck drivers:		
ADAIR, BUTLER, CLARK, DUNKIN, HOWELL, KNOX, LEWIS, OREGON, PUTNAM, RIPLEY, SCHUYLER, AND SCOTLAND COUNTIES		
GROUP 1.....	$ 21.79	5.50
GROUP 2.....	$ 21.95	5.50
GROUP 3.....	$ 21.94	5.50
GROUP 4.....	$ 22.06	5.50
AUDRAIN, BOLLINGER, BOONE, CALLAWAY, CAPE GIRARDEAU, CARTER, COLE, CRAWFORD, DENT, GASCONADE, IRON, MACON, MADISON, MARIES, MARION, MILLER, MISSISSIPPI, MONROE, MONTGOMERY, NEW MADRID, OSAGE, PEMISCOT, PERRY, PHELPS, PIKE, PULASKI,		

RALLS, REYNOLDS, ST.
FRANCOIS, STE.
GENEVIEVE, SCOTT,
SHANNON, SHELBY,
STODDARD, TEXAS,
WASHINGTON, AND WAYNE
COUNTIES

GROUP 1	$ 22.52	5.50
GROUP 2	$ 22.68	5.50
GROUP 3	$ 22.67	5.50
GROUP 4	$ 22.79	5.50

TRUCK DRIVERS CLASSIFICATIONS:
GROUP 1: Flat Bed Trucks, Single Axle; Station Wagons; Pickup Trucks; Material Trucks, Single Axle; Tank Wagon, Single Axle
GROUP 2: Agitator and Transit Mix Trucks
GROUP 3: Flat Bed Trucks, Tandem Axle; Articulated Dump Trucks; Material Trucks, Tandem Axle; Tank Wagon, Tandem Axle
GROUP 4: Semi and/or Pole Trailers; Winch, Fork & Steel Trucks; Distributor Drivers and Operators; Tank Wagon, Semi-Trailer; Insley Wagons, Dumpsters, Half-Tracks, Speedace, Euclids and other similar equipment; A-Frame and Derrick Trucks; Float or Low Boy

---

TEAM0056-001 05/01/2002

	Rates	Fringes
Truck drivers:		
ANDREW, BARTON, BATES, BENTON, CALDWELL, CAMDEN, CARROLL, CEDAR, CHARITON, CHRISTIAN, CLINTON, COOPER, DADE, DALLAS, DAVIESS, DEKALB, DOUGLAS, GREENE, HENRY, HICKORY, HOWARD, JASPER, LACLEDE, LAWRENCE, LINN, LIVINGSTON, MONITEAU, MORGAN, NEWTON, PETTIS, POLK, RANDOLPH, ST CLAIR, SALINE, VERNON, WEBSTER, AND WRIGHT COUNTIES		
GROUP 1	$ 22.22	5.50
GROUP 2	$ 22.38	5.50
GROUP 3	$ 22.37	5.50
GROUP 4	$ 22.49	5.50
GROUP 5	$ 22.12	5.50
ATCHISON, BARRY, GENTRY, GRUNDY, HARRISON, HOLT, MCDONALD, MERCER, NODADWAY, OZARK, STONE, SULLIVAN, TANEY AND WORTH COUNTIES		
GROUP 1	$ 21.49	5.50
GROUP 2	$ 21.65	5.50
GROUP 3	$ 21.64	5.50

```
      GROUP 4...................$ 21.76             5.50
      GROUP 5...................$ 21.39             5.50
    BUCHANAN, JOHNSON AND
    LAFAYETTE COUNTIES
      GROUP 1...................$ 23.43             5.50
      GROUP 2...................$ 23.54             5.50
      GROUP 3...................$ 23.58             5.50
      GROUP 4...................$ 23.65             5.50
      GROUP 5...................$ 23.33             5.50
  TRUCK DRIVER CLASSIFICATIONS
  GROUP 1:  Flat bed trucks single axle; station wagons; pickup
  trucks; material trucks single axle; tank wagons single axle.
  GROUP 2:  Agitator and transit mix-trucks.
  GROUP 3:  Flat bed trucks tandem axle; articulated dump
  trucks; material trucks tandem axle; tank wagons tandem axle.
  GROUP 4:  Semi and/or pole trailers; winch, fork & steel
  trucks; distributor drivers & operators; tank wagons semi-
  trailer; insley wagons, dumpsters, half-tracks, speedace,
  euclids & other similar equipment; A-frames and derrick
  trucks; float or low boy.
  GROUP 5:  Warehousemen.
-----------------------------------------------------------------
TEAM0245-001 03/25/1998
BARRY, BARTON, CAMDEN, CEDAR, CHRISTIAN, DALLAS, DENT, DOUGLAS,
GREENE, HICKORY, HOWELL, JASPER, LACLEDE, LAWRENCE, MCDONALD,
MILLER, NEWTON, OZARK, PHELPS, POLK, PULASKI, SHANNON, STONE,
TANEY, TEXAS, VERNON, WEBSTER AND WRIGHT COUNTIES
                                  Rates          Fringes
  Truck drivers:
    Traffic Control Service
    Driver....................$ 12.90           3.56+a
  PAID HOLIDAYS: New Year's Day, Decoration Day, July 4th,
  Labor Day, Thanksgiving Day, Christmas Day, employee's
  birthday and 2 personal days.
-----------------------------------------------------------------
TEAM0541-001 03/22/2004
CASS, CLAY, JACKSON, PLATTE AND RAY COUNTIES
                                  Rates          Fringes
  Truck drivers:
    GROUP 1...................$ 24.40             8.00
    GROUP 2...................$ 23.85             8.00
    GROUP 3...................$ 23.34             8.00
  TRUCK DRIVERS CLASSIFICATIONS
  GROUP 1:  Mechanics and Welders, Field; A-Frame Low Boy-Boom
  ruck Driver.
  GROUP 2:  Articulated Dump Truck; Insley Wagons: Dump Trucks,
  Excavating, 5 cu yds and over; Dumpsters; Half-Tracks:
  Speedace: Euclids & similar excavating equipment Material
  trucks, Tandem Two teams; Semi-Trailers; Winch trucks-Fork
  trucks; Distributor Drivers and Operators; Agitator and
  Transit Mix; Tank Wagon Drivers, Tandem or Semi; One Team;
  Station Wagons; Pickup Trucks; Material Trucks, Single Axle;
  Tank Wagon Drivers, Single Axle
  GROUP 3:  Oilers and Greasers - Field
-----------------------------------------------------------------
TEAM0541-002 03/25/2000
BATES, CASS, CLAY, HENRY, JACKSON, JOHNSON, LAFAYETTE, PLATTE,
AND RAY COUNTIES
                                  Rates          Fringes
```

Truck drivers:
Traffic Control Service
Driver.....$ 14.15 2.44+a
a. PAID HOLIDAYS: New Year's Day, Decoration Day, July 4th, Labor Day, Thanksgiving Day, Christmas Day, Employee's birthday and 2 personal days.

TEAM0682-002 05/01/2003
ST LOUIS CITY AND COUNTY

	Rates	Fringes
Truck drivers:		
GROUP 1	$ 22.635	3.91+a+b
GROUP 2	$ 22.835	3.91+a+b
GROUP 3	$ 22.935	3.91+a+b
GROUP 4	$ 22.125	3.91+a+b

a. PENSION: $25.60 per day, $128.00 maximum per week.
b. HAZMAT PREMIUM: If Hazmat certification on a job site is required by a state or federal agency or requested by project owner or by the employer, employees on that job site shall receive $1.50 premium pay.

TRUCK DRIVERS CLASSIFICATIONS

GROUP 1 - Pick-up trucks; forklift, single axle; flatbed trucks; job site ambulance, and trucks or trailers of a water level capacity of 11.99 cu. yds. or less
GROUP 2 - Trucks or trailers of a water level capacity of 12.0 cu yds. up to 22.0 cu yds. including euclids, speedace and similar equipment of same capacity and compressors
GROUP 3 - Trucks or trailers of a water level capacity of 22.0 cu. yds & over including euclids, speedace & all floats, flatbed trailers, boom trucks, winch trucks, including small trailers, farm wagons tilt-top trailers, field offices, tool trailers, concrete pumps, concrete conveyors & gasoline tank trailers and truck mounted mobile concrete mixers
GROUP 4 - Warehousemen.
FOOTNOTE FOR TRUCK DRIVERS:
a. PAID HOLIDAYS: Christmas Day, Independence Day, Labor Day, Memorial Day, Veterans Day, New Year's Day, Thanksgiving Day.
PAID VACATION: 3 days paid vacation for 600 hours of service in any one contract year; 4 days paid vacation for 800 hours of service in any one contract year; 5 days paid vacation for 1,000 hours of service in any one contract year. When such an employee has completed 3 years of continuous employment with the same employer and then works the above required number of hours, he shall receive double the number of days of vacation specified above. When such an employee has completed 10 years of continuous employment with the same employer and then works the above required number of hours, he shall receive triple the number of days of vacation specified above. When such an employee has completed 15 years of continuous employment with the same employer and then works the above required number of hours, he shall receive 4 times the number of days of vacation specified above.

TEAM0682-003 05/01/2002
ST.CHARLES, FRANKLIN, JEFFERSON, LINCOLN AND WARREN COUNTIES

	Rates	Fringes
Truck drivers:		
GROUP 1	$ 22.435	3.46+a+b+c

GROUP 2.....$ 22.635 3.46+a+b+c
GROUP 3.....$ 22.735 3.46+a+b+c
GROUP 4.....$ 21.925 3.46+a+b+c

a.PAID HOLIDAYS: Christmas, Fourth of July, Labor Day, Memorial Day, Veterans Day, to be celebrated on either its National Holiday or on the day after Thanksgiving, whichever is agreed upon by the Association and the Union, New Year's Day and Thanksgiving Day.

PAID VACATION: 3 days paid vacation for 600 hours of service in any one contract year; 4 days paid vacation for 800 hours of service in any one contract year; 5 days paid vacation for 1,000 hours of service in any one contract year. When such an employee has completed 3 years of continuous employment with the same employer and then works the above required number of hours, he shall receive double the number of days of vacation specified above. When such an employee has completed 10 years of continuous employment with the same employer and then works the above required number of hours, he shall receive triple the number of days of vacation specified above. When such an employee has completed 15 years of continuous employmen with the same employer and then works the above required number of hours, he shall receive 4 times the number of days of vacation specified above. b.Pension: $22.80 per day either worked or compensated to a maximum of $114.00 per week.

c.Hazmat Pay: If Hazmat Certification on a job site is required by a state or federal agency or requested by project owner or by the employer, employees on that job site shall receive $1.50 per hour premium pay.

TRUCK DRIVER CLASSIFICATIONS:

GROUP 1: Trucks or Trailers of a Water Level Capacity of 11.99 cu. yds. or less, Forklift Trucks, Job Site Ambulances, Pickup Trucks, Flatbed Trucks.

GROUP 2: Trucks or Trailers of a Water Level Capacity of 12.0 cu. yds. up to 22 cu. yds., Euclids, Speedace and Similar Equipment of Same Capacity and Compressors.

GROUP 3: Trucks or Trailers of a Water Level Capacity of 22.0 cu. yds. and over, Euclids and all Floats, Flatbed Trailers, Boom Trucks, Winch Trucks, Including Small Trailers, Farm Wagons, Tilt Top Trailers, Tool Trailers, Concrete Pumps, Concrete Conveyors, Gasoline TankTrailers, Truck Mounted Mobile Concrete Mixers, End Dump, Side Dump and Articulated Dump Trucks

GROUP 4: Warehousemen.

WELDERS - Receive rate prescribed for craft performing operation to which welding is incidental.

==========

Unlisted classifications needed for work not included within the scope of the classifications listed may be added after award only as provided in the labor standards contract clauses (29CFR 5.5 (a) (1) (ii)).

In the listing above, the "SU" designation means that rates listed under the identifier do not reflect collectively bargained wage and fringe benefit rates. Other designations indicate unions whose rates have been determined to be prevailing.

WAGE DETERMINATION APPEALS PROCESS

1.) Has there been an initial decision in the matter? This can be:

* an existing published wage determination
* a survey underlying a wage determination
* a Wage and Hour Division letter setting forth a position on a wage determination matter
* a conformance (additional classification and rate) ruling

On survey related matters, initial contact, including requests for summaries of surveys, should be with the Wage and Hour Regional Office for the area in which the survey was conducted because those Regional Offices have responsibility for the Davis-Bacon survey program. If the response from this initial contact is not satisfactory, then the process described in 2.) and 3.) should be followed.

With regard to any other matter not yet ripe for the formal process described here, initial contact should be with the Branch of Construction Wage Determinations. Write to:

Branch of Construction Wage Determinations
Wage and Hour Division
U.S. Department of Labor
200 Constitution Avenue, N.W.
Washington, DC 20210

2.) If the answer to the question in 1.) is yes, then an interested party (those affected by the action) can request review and reconsideration from the Wage and Hour Administrator (See 29 CFR Part 1.8 and 29 CFR Part 7). Write to:

Wage and Hour Administrator
U.S. Department of Labor
200 Constitution Avenue, N.W.
Washington, DC 20210

The request should be accompanied by a full statement of the interested party's position and by any information (wage payment data, project description, area practice material, etc.) that the requestor considers relevant to the issue.

3.) If the decision of the Administrator is not favorable, an interested party may appeal directly to the Administrative Review Board (formerly the Wage Appeals Board). Write to:

Administrative Review Board
U.S. Department of Labor
200 Constitution Avenue, N.W.
Washington, DC 20210

4.) All decisions by the Administrative Review Board are final.

==========

END OF GENERAL DECISION

TABLE OF CONTENTS

SECTION NO.	DESCRIPTION
DIVISION 1 - GENERAL REQUIREMENTS	
01025	MEASUREMENT AND PAYMENT
01130	ENVIRONMENTAL PROTECTION
01330	SUBMITTAL PROCEDURES
01451	CONTRACTOR QUALITY CONTROL
01452	PROJECT SIGN, BARRICADES, AND TRAFFIC CONTROL SIGNS
DIVISION 2 - SITE WORK	
02050	DEMOLITION
02110	CLEARING, GRUBBING, AND REMOVAL
02215	GEOTEXTILE (FILTER FABRIC)
02219	EXCAVATION
02220	LEVEE EMBANKMENTS, BACKFILLS, AND WALL DRAINS
02350	STEEL SHEET PILING
02544	STONE PROTECTION
02456	AGGREGATE SURFACING
02707	CONTROL OF WATER
02720	STORM-DRAINAGE SYSTEM
02938	ESTABLISHMENT OF TURF
DIVISION 3 – CONCRETE	
03100	FORMWORK FOR CONCRETE
03200	STEEL BARS AND ACCESSORIES FOR CONCRETE REINFORCEMENT
03300	CAST-IN-PLACE CONCRETE
03304	PRESSURE GROUTING
DIVISIONS 4 - NOT USED	
DIVISION 5- METALS	
05120	STRUCTURAL STEEL AND MISCELLANEOUS METALS
05914	SLUICE GATE AND GATE LIFT ASSEMBLY
DIVISIONS 6 THRU 16 - NOT USED	

DIVISION 1 - GENERAL REQUIREMENTS

SECTION 01025

MEASUREMENT AND PAYMENT

TABLE OF CONTENTS

PART 1 GENERAL
1.1 SUBMITTALS (NOT USED)
1.2 RELATED REQUIREMENTS
1.2.1 Contract Clauses
1.2.2 Special Contract Requirements (Not Used)
1.3 LUMP SUM PAYMENT ITEMS
1.3.1 General
1.3.2 Lump Sum Items
1.4 UNIT PRICE PAYMENT ITEMS
1.4.1 General
1.4.2 Unit Price Items

PART 2 PRODUCTS (NOT USED)

PART 3 EXECUTION (NOT USED)

SECTION 01025

MEASUREMENT AND PAYMENT

PART 1 GENERAL

1.1 SUBMITTALS (Not Used)

1.2 RELATED REQUIREMENTS

1.2.1 Contract Requirements

Payments under fixed price construction contracts.

1.2.2 Special Contract Requirements (Not Used)

1.3 LUMP SUM PAYMENT ITEMS

1.3.1 General

Payment items for the work of this contract for which lump sum payments will be made are listed in the BIDDING SCHEDULE and described below. All costs for items of work, which are not specifically mentioned to be included in a particular lump sum or unit price payment item, shall be included in the listed lump sum item most closely associated with the work involved. The lump sum price and payment made for each item listed shall constitute full compensation for furnishing all plant, labor, materials, and equipment, and performing any associated Contractor quality control, meeting safety requirements, tests and reports, and for performing all work required for which separate payment is not otherwise provided.

1.3.2 Lump Sum Items

(1) "Mobilization and Demobilization"

a. Payment

Payment will be made for costs associated with mobilization and demobilization, as defined in Special Contract Requirement paragraph 1.29 PAYMENT FOR MOBILIZATION AND DEMOBILIZATION.

b. Unit of measure: Lump Sum (LS)

(2) "Environmental Protection"

a. Payment

Payment will be made for costs associated with operations necessary for environmental protection as specified in SECTION 01130 – ENVIRONMENTAL PROTECTION

b. Unit of measure: Lump Sum (LS)

(3) "Control of Water"

a. Payment

Payment for maintaining drainage and the water removal system will be made in accordance with the Payment Schedule below at the contract lump sum price for "Control of Water", which price and payment shall constitute full compensation for furnishing all plant, labor, and material and all work incidental thereto including construction of dikes, ditches, drains, sumps, pumps, piezometers and all other work which may be necessary to accomplish the work defined in SECTION 02707 of these specifications and shown on the contract drawings not previously mentioned.

Payment Schedule

20%	At completion of installation and acceptable initial operation.
70%	Prorated cost on the basis of the estimated number of months of use.
10%	At completion of removal as required herein.

b. Unit of measure: Lump Sum (LS).

(4) "Demolition"

a. Payment

Payment for demolition will be made at the contract lump sum price for "Demolition", which price and payment shall constitute full compensation for the removal of one existing sluice gate lift assembly and operator tower and removal of all resulting rubbish and debris, disposal of demolished items, all equipment and labor, all shoring, bracing and other material, clean up and all other items incidental thereto; all as specified in SECTION 02050 DEMOLITION or as shown on the contract documents.

b. Unit of measure: Lump Sum (LS).

(5) "Clearing and Grubbing"

a. Payment

Payment for clearing and grubbing will be made at the contract lump sum price for "Clearing and Grubbing", which price and payment shall constitute full compensation for clearing and grubbing, disposal of cleared and grubbed materials, refill of grubbing holes, and performing all operations incidental thereto; all as specified in SECTION 02110 – CLEARING, GRUBBING AND REMOVAL.

(6) "Excavation"

a. Payment

Payment for excavation will be made at the contract lump sum price for "Excavation," which includes all equipment and labor for outlet channel excavation, excavation for riprap placement; all hauling of excavation materials, disposal of excess material, all maintenance of subgrade prior to placement of backfill or construction of structures, final clean up of right-of-way and incidental operations required to complete the work as specified in SECTION 02219 – EXCAVATION.

b. Unit of measure: Lump Sum (LS).

(7) "Pervious Backfill"

a. Payment

Payment for the pervious backfill will not be measured for payment, but will be made at the contract lump sum price for "Pervious Backfill", which price and payment shall constitute full compensation for constructing the pervious backfill. All such above mentioned features of work shall be constructed as set forth in SECTION 02220 – LEVEE EMBANKMENTS, BACKFILLS AND WALL DRAINS.

b. Unit of measure: Lump Sum (LS)

(8) "Wall Drain"

a. Payment

Payment for 4-inch recessed flap gates, PVC pipe, outlet screens, geotextile and gravel will not be measured for payment, but will be made at the contract lump sum price for "Wall Drain", which price and payment shall constitute full compensation for performing the work involved in the installing of the wall drain as specified in SECTION 02220 – LEVEE EMBANKMENTS, BACKFILLS AND WALL DRAINS.

b. Unit of measure: Lump Sum (LS)

(9) "Turfing"

a. Payment

Payment for turfing will be made at the contract lump sum price for "Turfing", which price and payment shall constitute full compensation for the work specified in this section pertaining to establishment of turf as specified in SECTION 02938 – ESTABLISHMENT OF TURF.

Payment Schedule

50% At completion of installation

50% Final Acceptance.

b. Unit of measure: Lump Sum (LS)

(10) "Reinforced Concrete Culvert Pipe, 36-inch diameter"

a. Payment

Payment for the culvert will be made at the contract lump sum price for "Reinforced Concrete Culvert Pipe, 36-inch diameter" which price and payment shall constitute full compensation for furnishing and installing the culvert, flared end section and encasement pipe; incidental excavation required for the installation of the new culvert, flared end section, jacking pit and outlet structure; placement and compaction of the compacted fill and impervious backfill and all other operations incidental thereto; all as specified in SECTION 02220 – LEVEE EMBANKMENTS, BACKFILLS AND WALL DRAINS SECTION AND 02720 – STORM-DRAINAGE SYSTEM.

b. Unit of measure: Lump Sum (LS)

(11) "Geotextile

a. Payment

Payment shall be made at the contract lump sum price for "Geotextile" which price and payment shall constitute full compensation to the Contractor for providing all plant, labor, material, and equipment and performing all operations necessary for the complete and satisfactory installation of the geotextile under the riprap as specified in SECTION 02215 – GEOTEXTILE. Geotextile required at the wall drain will be paid for under "Wall Drain". Payment for the items listed below is included in the contract lump sum price for "Geotextile" and shall not be counted a second time in the process of determining the extent of geotextile placed:

(1) Material and associated equipment and operation used in laps, seams, or extra length;

(2) Securing pins and associated material, equipment, and operations.

No payment shall be made for geotextiles replaced because of contamination or damage due to Contractor fault or negligence.

b. Unit of measure: Lump Sum (LS)

(12) "Cast-In-Place Concrete"

a. Payment

Payment for concrete will be made at the contract lump sum price for "Cast-In-Place Concrete," which price and payment shall constitute full compensation for furnishing concrete, formwork, and steel bars and accessories for concrete reinforcement as specified in the following: SECTION 03100 - FORMWORK FOR CONCRETE, SECTION 03200 - STEEL BARS AND ACCESSORIES FOR CONCRETE REINFORCEMENT, AND SECTION 03300 – CAST-IN-PLACE CONCRETE.

b. Unit of measure: Lump Sum (LS)

(13) "Sluice Gate and Gate Lift Assembly"

a. Payment

Payment for the sluice gate and gate lift assembly will be made at the contract lump sum price for "Sluice Gate and Gate Lift Assembly," which price and payment shall constitute full compensation for furnishing all plant, labor, materials, and equipment, and performing all operations necessary including the services of an erecting engineer, for the installation of the sluice gate and gate assembly as specified in SECTION 05914 – SLUICE GATE AND GATE LIFT ASSEMBLY, paragraph 3.1.

b. Unit of measure: Lump Sum (LS)

(14) "Pressure Grouting"

a. Payment

Payment for grouting of the existing pipe will be made at the contract lump sum price for "Grouting," which price and payment shall constitute full compensation for furnishing all plant, labor, materials and equipment and for performing all work in connection with the

grouting of the existing drainage structure all as specified in SECTION 03304-PRESSURE GROUTING.

b. Unit of measure: Lump Sum (LS)

(15) "Structural Steel and Miscellaneous Metals"

a. Payment

Payment for the various items listed herein below will be made at the contract lump sum price for "Structural Steel and Miscellaneous Metals" which price and payment shall constitute full compensation for furnishing all labor, materials and equipment, and performing all work in connection with furnishing and installing the following items, all as specified in SECTION 05120 – STRUCTURAL STEEL AND MISCELLANEOUS METALS and as specified in SECTION 02350 – STEEL SHEET PILING. When piles which have not been driven to penetration depths shown on drawings are directed to be cut off, except for cut-offs due to excessive battering, a lump sum payment of $10.00 will be made for cutting off each pile.

(1) Handrail, including anchor bolts;
(2) Walkway, including grating;
(3) Security fence and any other miscellaneous metals not described in any other payment clause and
(4) Steel sheet piling,type PS-27.5

b. Unit of measure: Lump Sum (LS)

1.4 UNIT PRICE PAYMENT ITEMS

1.4.1 GENERAL

Payment items for the work of this contract on which the contract unit price payments will be made are listed in the BIDDING SCHEDULE and described below. The unit price and payment made for each item listed shall constitute full compensation for furnishing all plant, labor, materials, and equipment, and performing any associated Contractor quality control, environmental protection, meeting safety requirements, test and reports, and for performing all work required for each of the unit price items.

1.4.2 UNIT PRICE ITEMS

(1) "Riprap 'R 90'"

a. Payment

Payment for riprap will be made at the applicable contract unit price for "Riprap 'R 90'", which price and payment shall include all costs of furnishing, hauling, handling, placement, and maintaining the riprap; all as specified in SECTION 02544 – STONE PROTECTION.

b. Measurement

All stone will be measured for payment by the ton (2,000 pounds) by weighing each truckload to the nearest 0.1 ton, and the final quantity of the whole sum for each type of stone will be rounded to the nearest whole ton. The stone will be measured for payment by being weighed on certified scales acceptable to the Contracting Officer before being placed into the work. Scales shall be of sufficient length to permit simultaneous weighing of all axle loads and shall be inspected, tested and sealed as directed to assure accuracy within 0.5 percent throughout the range of the scales. Scales shall be checked and certified before any stone hauling and rechecked and re-certified whenever a variance is suspected. As a minimum, all weight tickets shall have the contract number or project name, the gross weight, the vehicle identity and empty weight, and the net load weight. Scales that produce this information printed on the weight tickets are preferred. The Contractor has the option to use certified, and otherwise acceptable, scales that are Contractor furnished, quarry/supplier furnished, or commercial/public facilities.

c. Unit of measure: Ton (TN).

PART 2 PRODUCTS (Not Used)

PART 3 EXECUTION (Not Used)

** End of Section **

DIVISION 1 - GENERAL REQUIREMENTS

SECTION 01130

ENVIRONMENTAL PROTECTION

TABLE OF CONTENTS

PART 1 GENERAL
1.1 DEFINITIONS
1.2 ENVIRONMENTAL PROTECTION REQUIREMENTS
1.2.1 Environmental Protection Plan
1.2.1.1 Protection of Features
1.2.1.2 Procedures
1.2.1.3 Permit or License
1.2.1.4 Drawings
1.2.1.5 Environmental Monitoring Plans
1.2.1.6 Traffic Control Plan
1.2.1.7 Surface and Ground Water
1.2.1.8 Work Area Plan
1.3 SUBCONTRACTORS
1.4 PERMITS OBTAINED BY CORPS OF ENGINEERS
1.5 REGULATORY REQUIREMENTS

PART 2 PRODUCTS (Not Applicable)

PART 3 EXECUTION
3.1 PROTECTION OF ENVIRONMENTAL RESOURCES
3.1.1 Protection of Land Resources
3.1.1.1 Work Area Limits
3.1.1.2 Protection of Landscape
3.1.1.3 Reduction of Exposure of Unprotected Erodible Soils
3.1.1.4 Temporary Protection of Disturbed Areas
3.1.1.5 Erosion and Sedimentation Control Devices
3.1.1.6 Location of Contractor Facilities
3.1.1.7 Disposal Areas on Government Property
3.1.1.8 Temporary Excavation and Embankments
3.1.1.9 Disposal of Solid Wastes
3.1.1.10 Disposal of Chemical Wastes
3.1.1.11 Disposal of Discarded Materials
3.2 HISTORICAL, ARCHAEOLOGICAL AND CULTURAL RESOURCES

3.3 PROTECTION OF WATER RESOURCES
3.3.1 Cofferdam and Diversion Operations
3.3.2 Stream Crossings
3.3.3 Monitoring of Water Areas Affected by Construction Activities
3.4 PROTECTION OF FISH AND WILDLIFE RESOURCES
3.5 PROTECTION OF AIR RESOURCES
3.5.1 Particulates
3.5.2 Hydrocarbons and Carbon Monoxide
3.5.3 Odors
3.5.4 Monitoring Air Quality
3.6 INSPECTION
3.7 POST CONSTRUCTION CLEANUP
3.8 RESTORATION OF LANDSCAPE DAMAGE
3.9 MAINTENANCE OF POLLUTION FACILITIES
3.10 TRAINING OF CONTRACTOR PERSONNEL IN POLLUTION CONTROL

SECTION 01130

ENVIRONMENTAL PROTECTION

PART 1 GENERAL

1.1 DEFINITIONS

For the purpose of this specification, environmental pollution and damage is defined as the presence of chemical, physical, or biological elements or agents which adversely affect human health or welfare; unfavorably alter ecological balances of importance to human life; affect other species of importance to man; or degrade the utility of the environment for aesthetic, cultural and/or historical purposes. The control of environmental pollution and damage requires consideration of air, water, and land, and includes management of visual aesthetics, noise, solid waste, radiant energy and radioactive materials, as well as other pollutants.

1.2 ENVIRONMENTAL PROTECTION REQUIREMENTS

Provide and maintain, during the life of the contract, environmental protection. Plan for and provide environmental protective measures to control pollution that develops during normal construction practice. Plan for and provide environmental protective measures required to correct conditions that develop during the construction of permanent or temporary environmental features associated with the project. Comply with Federal, State, and local regulations pertaining to the environment, including but not limited to water, air, and noise pollution.

1.2.1 Environmental Protection Plan

Within 15 days after receipt of Notice of Award of the contract the Contractor shall submit in writing an Environmental Protection Plan and, prior to starting work, meet with representatives of the Contracting Officer to develop mutual understanding relative to compliance with this provision and administration of the environmental protection program. Approval of the Contractor's plan will not relieve the Contractor of his responsibility for adequate and continuing control of pollutants and other environmental protection measures. The Government reserves the right to make changes in his environmental protection plan and operations as necessary to maintain satisfactory environmental protection performance. The Environmental Protection Plan shall include but not be limited to the following:

1.2.1.1 Protection of Features

The Contractor shall determine methods for the protection of features to be preserved within authorized work areas. The Contractor shall prepare a listing of methods to protect resources needing protection, i.e., trees, shrubs, vines, grasses and ground cover, landscape features, air and water quality, fish and wildlife, soil, historical, archaeological and cultural resources.

1.2.1.2 Procedures

The Contractor shall implement procedures to provide the required environmental protection and to comply with the applicable laws and regulations. The Contractor shall set out the procedures to be followed to correct pollution of the environment due to accident, natural causes or failure to follow the procedures set out in accordance with the Environmental Protection Plan.

1.2.1.3 Permit or License

The Contractor shall obtain all needed permits or licenses.

1.2.1.4 Drawings

The Contractor shall include drawings showing locations of any proposed temporary excavations or embankments for haul roads, stream crossings, material storage areas, structures, sanitary facilities, stockpiles of earth materials, and disposal areas for excess earth material and unsatisfactory earth materials.

1.2.1.5 Environmental Monitoring Plans

The Contractor shall include environmental monitoring plans for the job site which incorporate land, water, air and noise monitoring.

1.2.1.6 Traffic Control Plan

The Contractor shall include a traffic control plan for the job site.

1.2.1.7 Surface and Ground Water

The Contractor shall establish methods of protecting surface and ground water during construction activities.

1.2.1.8 Work Area Plan

The Contractor shall include a work area plan showing the proposed activity in each portion of the area and identifying the areas of limited use or nonuse. The plan shall include measures for marking the limits of use areas.

1.3 SUBCONTRACTORS

Assurance of compliance with this section by subcontractors will be the responsibility of the Contractor.

1.4 PERMITS OBTAINED BY CORPS OF ENGINEERS

This section supplements the Contractor's responsibility under the contract clause PERMITS

AND RESPONSIBILITIES to the extent that the Government has already obtained some environmental permits. The Government has obtained permits for erosion control (SWPPP) and water quality certification for deposition into wetlands (Section 404). The Contractor shall comply with the terms and conditions of these permits. These conditions have been incorporated into these specifications. The Contractor shall obtain all other needed permits or licenses.

1.5 REGULATORY REQUIREMENTS

The Contractor shall comply with all state regulatory and statutory requirements.

PART 2 PRODUCTS (Not Applicable)

PART 3 EXECUTION

3.1 PROTECTION OF ENVIRONMENTAL RESOURCES

The environmental resources within the project boundaries and those affected outside the limits of permanent work under this contract shall be protected during the entire period of this contract. The Contractor shall confine his activities to areas defined by the contract drawings or specifications. Environmental protection shall be as stated in the following subparagraphs.

3.1.1 Protection of Land Resources

Prior to the beginning of any construction, the Contracting Officer will identify all land resources to be preserved within the Contractor's work area. The Contractor shall not remove, cut, deface, injure, or destroy land resources including trees, shrubs, vines, grasses, top soil, and land forms without special permission from the Contracting Officer. No ropes, cables, or guys shall be fastened to or attached to any trees for anchorage unless specifically authorized. Where such special emergency use is permitted, the Contractor shall provide effective protection for land and vegetation resources at all times as defined in the following subparagraphs.

3.1.1.1 Work Area Limits

Prior to any construction, the Contractor shall mark the areas where no work is to be performed under this contract. Isolated areas within the general work area which are to be saved and protected shall also be marked or fenced. Monuments and markers shall be protected before construction operations commence and during all construction operations. Where construction operations are to be conducted during darkness, the markers shall be visible during darkness. The Contractor shall convey to his personnel the purpose of marking and/or protection of all necessary objects.

3.1.1.2 Protection of Landscape

Trees, shrubs, vines, grasses, land forms and other landscape features to be preserved, indicated and defined on the drawings submitted by the Contractor as a part of the Environmental Protection Plan, shall be clearly identified by marking, fencing, or wrapping with boards, or any other approved techniques.

3.1.1.3 Reduction of Exposure of Unprotected Erodible Soils

Earthwork brought to final grade shall be finished as indicated and specified. Side slopes and back slopes shall be protected as soon as practicable upon completion of rough grading. All earthwork shall be planned and conducted to minimize the duration of exposure of unprotected soils. Except in instances where the constructed feature obscures borrow areas, quarries and waste material areas, these areas shall not initially be cleared in total. Clearing of such areas shall progress in reasonably sized increments as needed to use the areas developed as approved by the Contracting Officer.

3.1.1.4 Temporary Protection of Disturbed Areas

Such methods as necessary shall be utilized to effectively prevent erosion and control sedimentation, including but not limited to the following:

a. Retardation and Control of Runoff

Runoff from the construction site shall be controlled by construction of diversion ditches, benches, and berms to retard and divert runoff to protected drainage courses, and the Contractor shall also utilize any measures required by area-wide plans approved under Paragraph 208 of the Clean Water Act.

3.1.1.5 Erosion and Sedimentation Control Devices

The Contractor shall construct or install all temporary and permanent erosion sedimentation control features. Temporary erosion and sediment control measures such as berms, dikes, drains, sedimentation basin, grassing and mulching shall be maintained until permanent drainage and erosion control facilities are completed and operative.

3.1.1.6 Location of Contractor Facilities

The Contractor's field offices, staging areas, stockpiles, storage, and temporary buildings shall be placed in areas designated on the contract drawings and approved by the Contracting Officer. Temporary movement or relocation of Contractor facilities shall be made only on approval by the Contracting Officer.

3.1.1.7 Disposal Areas on Government Property

Disposal areas on Government property shall be managed and controlled to limit material to areas designated on the contract drawings and prevent erosion of soil or sediment from entering nearby water courses or lakes. Disposal areas shall be developed in accordance with the grading plan indicated on the contract drawings.

3.1.1.8 Temporary Excavation and Embankments

Temporary excavation and embankments shall be controlled to protect adjacent areas from

contamination.

3.1.1.9 Disposal of Solid Wastes

Solid wastes (excluding clearing debris) shall be placed in containers which are emptied on a regular schedule. All handling and disposal shall be conducted to prevent contamination. The Contractor shall transport all solid waste off Government property and dispose of it in compliance with Federal, State, and local requirements for solid waste disposal.

3.1.1.10 Disposal of Chemical Wastes

Chemical wastes shall be stored in corrosion resistant containers, removed from the work area and disposed of in accordance with Federal, State, and local regulations.

3.1.1.11 Disposal of Discarded Materials

Discarded materials other than those which can be included in the solid waste category shall be handled as directed by the Contracting Officer.

3.2 HISTORICAL, ARCHAEOLOGICAL AND CULTURAL RESOURCES

Existing historical, archaeological and cultural resources within the Contractor's work area will be so designated by the Contracting Officer and precautions shall be taken by the Contractor to preserve all such resources as they existed at the time they were pointed out to the Contractor. The Contractor shall install all protection for these resources so designated on the contract drawings and shall be responsible for their preservation during this contract. If during construction items of apparent archaeological or historical interest are discovered, they shall be left undisturbed and the Contractor shall report the find immediately to the Contracting Officer.

3.3 PROTECTION OF WATER RESOURCES

The Contractor shall keep construction activities under surveillance, management and control to avoid pollution of surface and ground waters. Special management techniques as set out below shall be implemented to control water pollution by the listed construction activities which are included in this contract.

3.3.1 Cofferdam and Diversion Operations

The Contractor shall plan his operations and perform all work necessary to minimize adverse impact or violation of the water quality standard. Construction operations for dewatering, removal of cofferdams, tailrace excavation, and tunnel closure shall be controlled at all times to limit impact of water turbidity on the habitat for wildlife and impacts on water quality for downstream use.

3.3.2 Stream Crossings

Stream crossings shall be controlled during construction. Crossings shall provide movement of

materials or equipment which do not violate water pollution control standards of the Federal, State or local government.

3.3.3 Monitoring of Water Areas Affected by Construction Activities

Monitoring of water areas affected by construction activities shall be the responsibility of the Contractor. All water areas affected by construction activities shall be monitored by the Contractor.

3.4 PROTECTION OF FISH AND WILDLIFE RESOURCES

The Contractor shall keep construction activities under surveillance, management and control to minimize interference with, disturbance to and damage of fish and wildlife. Species that require specific attention along with measures for their protection shall be listed by the Contractor prior to beginning of construction operations.

3.5 PROTECTION OF AIR RESOURCES

The Contractor shall keep construction activities under surveillance, management and control to minimize pollution of air resources. All activities, equipment, processes, and work operated or performed by the Contractor in accomplishing the specified construction shall be in strict accordance with the laws of the State of Missouri and all Federal emission and performance laws and standards. Special management techniques as set out below shall be implemented to control air pollution by the construction activities which are included in the contract.

3.5.1 Particulates

Dust particles, aerosols, gaseous by-products from all construction activities, processing and preparation of materials, such as from asphaltic batch plants, shall be controlled at all times, including weekends, holidays and hours when work is not in progress. The Contractor shall maintain all excavations, stockpiles, haul roads, permanent and temporary access roads, plant sites, borrow areas, and all other work areas within or outside the project boundaries free from particulates which would cause the air pollution standards mentioned in the paragraph "PROTECTION OF AIR RESOURCES" to be exceeded or which would cause a hazard or a nuisance. Sprinkling, chemical treatment of an approved type, light bituminous treatment, baghouse, scrubbers, electrostatic precipitators or other methods will be permitted to control particulates in the work area. Sprinkling, to be efficient, must be repeated at such intervals as to keep the disturbed area damp at all times. The Contractor must have adequate equipment available to accomplish this task. Particulate control shall be performed as the work proceeds and whenever a particulate nuisance or hazard occurs.

3.5.2 Hydrocarbons and Carbon Monoxide

Hydrocarbons and carbon monoxide emissions from equipment shall be controlled to Federal and State allowable limits at all times.

3.5.3 Odors

Odors shall be controlled at all times for all construction activities, processing and preparation of materials.

3.5.4 Monitoring Air Quality

Monitoring of air quality shall be the responsibility of the Contractor. All air areas affected by the construction activities shall be monitored by the Contractor.

3.6 INSPECTION

The Contracting Officer will notify the Contractor in writing of any observed noncompliance with the Contractor's environmental protection plan. The Contractor shall, after receipt of such notice, inform the Contracting Officer of proposed corrective action and take such action as may be approved. If the Contractor fails to comply promptly, the Contracting Officer may issue an order stopping all or part of the work until satisfactory corrective action has been taken. No time extensions will be granted or costs or damages allowed to the Contractor for any such suspension.

3.7 POST CONSTRUCTION CLEANUP

The Contractor shall clean up all area(s) used for construction.

3.8 RESTORATION OF LANDSCAPE DAMAGE

The Contractor shall restore all landscape features damaged or destroyed during construction operations outside the limits of the approved work areas. Such restoration shall be in accordance with the plans submitted for approval by the Contracting Officer.

3.9 MAINTENANCE OF POLLUTION FACILITIES

The Contractor shall maintain all constructed facilities and temporary pollution control devices for the duration of the contract or for that length of time construction activities create the particular pollutant.

3.10 TRAINING OF CONTRACTOR PERSONNEL IN POLLUTION CONTROL

The Contractor shall train his personnel in all phases of environmental protection. The training shall include methods of detecting and avoiding pollution, familiarization with pollution standards, both statutory and contractual, and installation and care of facilities (vegetative covers and instruments required for monitoring purposes) to insure adequate and continuous environmental pollution control.

** End of Section **

DIVISION 1 - GENERAL REQUIREMENTS

SECTION 01330

SUBMITTAL PROCEDURES

TABLE OF CONTENTS

PART 1 GENERAL

1.1 SUBMITTAL CLASSIFICATION
1.1.1 Government Approved
1.1.2 For Information Only
1.2 APPROVED SUBMITTALS
1.3 DISAPPROVED SUBMITTALS
1.4 WITHHOLDING OF PAYMENT

PART 2 PRODUCTS (NOT APPLICABLE)

PART 3 EXECUTION
3.1 GENERAL
3.2 SUBMITTAL REGISTER (ENG FORM 4288R)
3.3 SCHEDULING
3.4 TRANSMITTAL FORM (ENG FORM 4025R)
3.5 SUBMITTAL PROCEDURE
3.5.1 Procedures
3.5.2 Deviations
3.6 CONTROL OF SUBMITTALS
3.7 GOVERNMENT APPROVED SUBMITTALS
3.8 INFORMATION ONLY SUBMITTALS
3.9 STAMPS

SECTION 01330

SUBMITTAL PROCEDURES

PART 1 GENERAL

1.1 SUBMITTAL CLASSIFICATION

Submittals are identified with submittal description (SD) numbers and are classified as follows:

1.1.1 Government Approved

Governmental approval is required for extensions of design, critical materials, deviations, equipment whose compatibility with the entire system must be checked, and other items as designated by the Contracting Officer. Within the terms of the Contract Clause entitled "Specifications and Drawings for Construction," they are considered to be "shop drawings."

These items are tagged GA/AE or GA/RE in the submittal register.

The designer of record approves GA/AE review materials. This is usually an architectural-engineering design firm hired by the construction contractor. The Corps of Engineers construction resident engineer approves GA/RE review materials. This is usually a group of engineers who work for the installation’s resident engineer.

1.1.2 For Information Only (FIO)

All submittals not requiring Government approval will be for information only. These items are tagged FIO in the submittal register. They are not considered to be "shop drawings" within the terms of the Contract Clause referred to above.

1.2 APPROVED SUBMITTALS

The Contracting Officer's approval of submittals shall not be construed as a complete check, but will indicate only that the general method of construction, materials, detailing and other information are satisfactory.

Approval will not relieve the Contractor of the responsibility for any error, which may exist, as the Contractor under the CQC requirements of this contract is responsible for dimensions, the design of adequate connections and details, and the satisfactory construction of all work.

After submittals have been approved by the Contracting Officer, no re-submittal for the purpose of substituting materials or equipment will be considered unless accompanied by an explanation of why a substitution is necessary.

1.3 DISAPPROVED SUBMITTALS

The Contractor shall make all corrections required by the Contracting Officer and promptly furnish a corrected submittal in the form and number of copies specified for the initial submittal.

If the Contractor considers any correction indicated on the submittals to constitute a change to the contract, a notice in accordance with the Contract Clause "Changes" shall be given promptly to the Contracting Officer.

1.4 WITHHOLDING OF PAYMENT

Payment for materials incorporated in the work will not be made if required approvals have not been obtained.

PART 2 PRODUCTS (NOT APPLICABLE)

PART 3 EXECUTION

3.1 GENERAL

The Contractor shall make submittals as required by the specifications. The Contracting Officer may request submittals in addition to those specified when deemed necessary to adequately describe the work covered in the respective sections. Units of weights and measures used on all submittals shall be the same as those used in the contract drawings. Each submittal shall be complete and in sufficient detail to allow ready determination of compliance with contract requirements.

Prior to submittal, all items {GA and FIO} shall be checked and approved by the Contractor's Quality Control (CQC) representative and each item shall be stamped, signed, and dated by the CQC representative indicating action taken.

Proposed deviations from the contract requirements shall be clearly identified.

Submittals shall include items such as: Contractor's, manufacturer's, or fabricator's drawings; descriptive literature including (but not limited to) catalog cuts, diagrams, operating charts or curves; test reports; test cylinders; samples; O&M manuals (including parts list); certifications; warranties; and other such required submittals.

Submittals requiring Government approval shall be scheduled and made prior to the acquisition of the material or equipment covered thereby.

Samples remaining upon completion of the work shall be picked up and disposed of in accordance with manufacturer's Material Safety Data Sheets (MSDS) and in compliance with existing laws and regulations.

3.2 SUBMITTAL REGISTER (ENG FORM 4288)

At the end of this section is one set of ENG Form 4288 listing items of equipment and materials for which submittals are required by the specifications; this list may not be all-inclusive and additional submittals may be required.

The Contractor will also be given the submittal register as a diskette containing the computerized ENG Form 4288 and instructions on the use of the diskette. Columns "d" through "r" have been completed by the Government; the Contractor shall complete columns "a" and "s" through "u" and submit the forms (hard copy plus associated electronic file) to the Contracting Officer for approval within 30 calendar days after Notice to Proceed.

The Contractor shall keep this diskette up-to-date and shall submit it to the Government together with the monthly payment request. The approved submittal register will become the scheduling document and will be used to control submittals throughout the life of the contract.

The submittal register and the progress schedules shall be coordinated.

3.3 SCHEDULING

Submittals covering component items forming a system or items that are interrelated shall be scheduled to be coordinated and submitted concurrently.

All submittals for all interior finishes (wall, floor, ceiling), all base, casework, toilet partitions, window treatments and all other similar items requiring coordinated color selection shall be submitted concurrently. Certifications to be submitted with the pertinent drawings shall be so scheduled.

The contractor shall allow 30 calendar days, exclusive of mailing time, and this period shown on the submittal register and NAS schedule for submittals requiring Government review and approval.

No delay damages or time extensions will be allowed for time lost in late submittals or resubmittals.

An additional 10 calendar days shall be allowed and shown on the register and NAS schedule for the review and approval of submittals for food service equipment and refrigeration and HVAC control systems.

3.4 TRANSMITTAL FORM (ENG FORM 4025)

The sample transmittal form (ENG Form 4025) attached to this section shall be used for submitting both Government approved and for information only submittals in accordance with the instructions on the reverse side of the form. These forms will be furnished to the

Contractor. This form shall be properly completed by filling out all the heading blank spaces and identifying each item submitted.

Special care shall be exercised to ensure proper listing of the specification paragraph and/or sheet number of the contract drawings pertinent to the data submitted for each item.

3.5 SUBMITTAL PROCEDURE

Submittals shall be made as follows:

3.5.1 Procedures

The Contractor shall be responsible for the scheduling and control of all submittals.

The Contractor is responsible for confirming that the submittal register includes all submittals required by the contract documents.

In addition to those items listed on ENG Form 4288, the Contractor will furnish submittals for any deviation from the plans or specifications. The scheduled need dates must be recorded on the document for each item for control purposes and critical items must be tied to the contractor's approved schedule where applicable.

The Contractor will submit to the Contracting Officer for approval five (5) copies of all G/AE or G/RE level and for all FIO level submittals. This number of copies of submittals specified in this portion of the contract shall be as specified in lieu of the number as specified by FAR 52.236-21.

For those contracts requiring project schedule--Network Analysis System (NAS), the Contractor will schedule on the NAS, critical or key items of material or equipment which the procurement activities will, or have the potential to, significantly impact project critical path and completion. The list of key or critical items of material or equipment shall be submittal approved by the Contracting Officer. See attachment to Section 0800 for NAS scheduling requirements.

Where ENG Form 4025 must be submitted prior to approval of the Construction Progress Schedule, the Contractor shall submit an initial annotated ENG Form 4288 upon which dates for submittal, approval and delivery of procurement items shall be included for the first 60 days of the work.

Upon approval of the Construction Progress Schedule, or no later than 60 days after Notice to Proceed, the Contractor shall submit final annotated copies of ENG Form 4288-Submittal Register. Dates shall be coordinated with the approved Construction Progress Schedule to logically interface with the sequence of construction. Critical item numbers will be shown on the listing if NAS is required.

Furnishing the schedule shall not be interpreted as relieving the Contractor of his obligation to comply with all the specification requirements for the items on the schedule.

Contractor's Quality Control representative shall review the listing at least every 30 days and take appropriate action to maintain an effective system.

The Contractor shall furnish a list each 30 days of all submittals on which either Government's or Contractor's action is past due. This monthly list of delayed items shall also be annotated by the Contractor to show what corrective action he is taking with regard to slippages in submittal schedule that are attributable to actions by him, his subcontractors, or suppliers.

The Contractor shall provide updated submittal register data, electronically or on floppy disk, to the contracting Officer, monthly, indicating the current status and codes of all submittals in order update the master submittal register maintained by the Contracting Officer and to assure that the contractor's schedule is being maintained.

He shall also furnish revised due dates in those cases when the original submittal schedule is no longer realistic.

The Contractor shall certify that each submittal is correct and in strict conformance with the contract drawings and specifications. All submittals not subject to the approval of the Contracting Officer will be submitted for
Information purposes only, (FIO).

No Corps of Engineers action will be required for FIO submittals prior to incorporating these items into the work, but the submittal shall be furnished to the Area/Resident Engineer not less than 2 weeks prior to procurement of Contractor certified material, equipment, etc.

These Contractor approved submittals (FIO), will be used to verify that material received and used in the job is the same as that described and approved and will be used as record copies.

All samples of materials submitted as required by these specifications shall be properly identified and labeled for ready identification, and upon being certified by the Contractor and reviewed by the Contracting Officer, shall be stored at the site of the work for job site use until all work has been completed and accepted by the Contracting Officer.

Delegation of this approval authority to Contractor Quality Control does not relieve the Contractor from the obligation to conform to any contract requirement and will not prevent the Contracting Officer from requiring removal and replacement of construction not in contract conformance; nor does it relieve the Contractor from the requirement to furnish "samples" for testing by the Government Laboratory or check testing by the Government in those instances where the technical specifications so prescribe.

Contractor certified drawings will be subject to quality assurance review by the Government at any time during the duration of the contract.

No adjustment for time or money will be allowed for corrections required as a result of noncompliance with plans and specifications.

Submittals Requiring Government Approval (G/AE Level or G/RE Level). Where the review authority is designated to the Government, the Contractor is required to sign the certification on ENG Form 4025 in the box beside the remarks block in Section I. The Government will code the items in block h and sign the approval action block in Section II as the approving authority.

Operating and Maintenance Instructions. Six (6) complete sets of instructions containing the manufacturer's operating and maintenance instructions for each piece of equipment shall be furnished. Each set shall be permanently bound and shall have a hard cover.

One (1) complete set shall be furnished at the time test procedures are submitted.

Remaining sets shall be furnished to the Contracting Officer on the date of final/acceptance inspection of the project.
The following identification shall be inscribed on the covers: The words "OPERATING AND MAINTENANCE INSTRUCTIONS," name and location of the facility, name of the Contractor, and contract number. Flysheets shall be placed before instructions covering each subject. Instruction sheets shall be approximately 8-1/2 by 11 inches, with large sheets of drawings folded in. Instructions shall include but are not limited to:

(1) System layout showing piping, valves and controls;

(2) Approved wiring and control diagrams;

(3) A control sequence describing startup, operation and shutdown;

(4) Operating and maintenance instructions for each piece of equipment, including lubrication instructions and troubleshooting guide; and

(5) Manufacturer’s bulletins, cuts and descriptive data; parts lists and recommended parts.

3.5.2 Deviations

For submittals, which include proposed deviations requested by the Contractor, the column "variation" of ENG Form 4025 shall be checked.

The Contractor shall set forth in writing the reason for any deviations and annotate such deviations on the submittal.

The Government reserves the right to rescind inadvertent approval of submittals containing unnoted deviations.

The contractor is not authorized to take action on an approved deviation until the deviation is included in a final contract modification.

3.6 CONTROL OF SUBMITTALS

The Contractor shall carefully control his procurement operations to ensure that each individual submittal is made on or before the Contractor scheduled submittal date shown on the approved "Submittal Register."

3.7 GOVERNMENT APPROVED SUBMITTALS

Upon completion of review of submittals requiring Government approval, the submittals will be identified as having received approval by being so stamped and dated.

Three (3) copies of the GA submittals will be retained by the Contracting Officer and two (2) copies of the submittal will be returned to the Contractor-within the time specified-with action code.

Submittals requiring re-submittal to the Government are due immediately upon receipt by the contractor to avoid contractor delay to the project.

3.8 INFORMATION ONLY SUBMITTALS

Three (3) copies of the submittal will be retained by the Contracting Officer and two (2) copies returned to the contractor.

Not all FIO submittals will be reviewed by the Government. This Government review will be a quality assurance review only of a sample of the entire number of submittals.

Approval of the Contracting Officer is not required on information only submittals. The Government reserves the right to require the Contractor to resubmit any item found not to comply with the contract.

This does not relieve the Contractor from the obligation to furnish material conforming to the plans and specifications; will not prevent the Contracting Officer from requiring removal and replacement of nonconforming material incorporated in the work; and does not relieve the Contractor of the requirement to furnish samples for testing by the Government laboratory or for check testing by the Government in those instances where the technical specifications so prescribe.

FIO submittals noted for re-submittal to the Government for clarification or additional data are due immediately upon receipt by the contractor.

3.9 STAMPS

Stamps used by the Contractor on the submittal data to certify that the submittal meets contract requirements shall be similar to the following:

_____
CONTRACTOR

(Firm Name)

_____ Approved

_____ Approved with corrections as noted on submittal data and/or attached sheets(s).

SIGNATURE:
_____

TITLE:
_____

DATE:
_____

--End of Section--

TRANSMITTAL OF SHOP DRAWINGS, EQUIPMENT DATA, MATERIAL SAMPLES OR MANUFACTURE'S CERTIFICATES OF COMPLIANCE (Read instructions on the reverse side prior to initiating this form)	DATE	TRANSMITTAL NO.

SECTION I - REQUEST FOR APPROVAL OF THE FOLLOWING ITEMS (This section will be initiated by the contractor)

TO:	FROM	CONTRACT NO.	CHECK ONE: [ ] THIS IS A NEW TRANSMITTAL [ ] THIS IS A RESUBMITTAL OF TRANSMITTAL _____

SPECIFICATION SECT. NO. (Cover only one section with each transmittal)	PROJECT TITLE AND LOCATION	CHECK ONE: THIS TRANSMITTAL IS FOR [ ] FIO [ ] GOV''T APPROVAL

ITEM NO.	DESCRIPTION OF ITEM SUBMITTED (Type size, model number/etc.)	MFG OR CONTR. CAT., CURVE DRAWING OR BROCHURE NO. (See instruction no. 8)	NO. OF COPIES	CONTRACT REFERENCE DOCUMENT		FOR CONTRACTOR USE CODE	VARIATION (See Instruction No. 6)	FOR CE USE CODE
				SPEC. PARA NO.	DRAWING SHEET NO.			
a.	b.	c.	d.	e.	f.	g.	h.	i.

REMARKS	I certify that the above submitted items have been reviewed in detail and are correct and in strict conformance with the contract drawings and specifications except as otherwise stated. _____ NAME AND SIGNATURE OF CONTRACTOR

SECTION II - APPROVAL ACTION

ENCLOSURE RETURNED (Listed by Item No.)	NAME, TITLE AND SIGNATURE OF APPROVING AUTHORITY	DATE

1. Section 1 will be initiated by the Contractor in the required number of copies.

2. Each transmittal shall be numbered consecutively in the space provided for "Transmittal No.". This number, in addition to the contract number, will form a serial number for identifying each submittal. For new submittals or resubmittals, mark the appropriate box; on resubmittals, insert transmittal number of last submission as well as the new submittal number.

3. The "Item No." will be the same "Item No." as indicated on ENG FORM 4288 for each entry on this form.

4. Submittals requiring expeditious handling will be submitted on a separate form.

5. Separate transmittal form will be used for submittals under separate sections of the specifications.

6. A check shall be placed in the "Variation" column when a submittal is not in accordance with the plans and specifications--also, a written statement to that effect shall be included in the space provided for "Remarks".

7. Form is self-transmittal, letter of transmittal is not required.

8. When a sample of material or Manufacturer's Certificate of Compliance is transmitted, indicate "Sample" or "Certificate" in column c, Section I.

9. U.S. Army Corps of Engineers approving authority will assign action codes as indicated below in space provided in Section I, column i to each item submitted. In addition they will ensure enclosures are indicated and attached to the form prior to return to the contractor. The Contractor will assign action codes as indicated below in Section I, column g, to each item submitted.

THE FOLLOWING ACTION CODES ARE GIVEN TO ITEMS SUBMITTED

A -- Approved as submitted.

B -- Approved, except as noted on drawings.

C -- Approved, except as noted on drawings. Refer to attached sheet resubmission required.

D -- Will be returned by separate correspondence.

E -- Disapproved (See attached).

F -- Receipt acknowledge.

FX -- Receipt acknowledged, does not comply as noted with contract requirements.

G -- Other *(Specify)*

10. Approval of items does not relieve the contractor from complying with all the requirements of the contract plans and specifications.

SUBMITTAL REGISTER

(ER 415 1-10)

CONTRACT NO.

TITLE AND LOCATION: Gravity Flow Culvert Replacement (New Madrid, Missouri)

CONTRACTOR

SPECIFICATION SECTION: 01451

					TYPE OF SUBMITTAL										CLASSI-FICATION			CONTRACTOR SCHEDULE DATES			CONTRACTOR ACTION			GOVERNMENT ACTION		
ACTIVITY NO a.	TRANS-MITTAL NO b.	ITEM NO c.	SPECIFICATION PARAGRAPH NUMBER d.	DESCRIPTION OF ITEM SUBMITTED e.	DATA f.	DRAWINGS g.	INSTRUCTIONS h.	SCHEDULES i.	STATEMENTS j.	REPORTS k.	CERTIFICATES l.	SAMPLES m.	RECORDS n.	O&M MANUALS o.	INFORMATION ONLY p.	GOVERNMENT APPROVED q.	REVIEWER r.	SUBMIT s.	APPROVAL NEEDED BY t.	MATERIAL NEEDED BY u.	CODE v.	DATE w.	SUBMIT TO GOVERN-MENT x.	CODE y.	DATE z.	REMARKS aa.
			3.2	CQC Plan					X						X		C									

SUBMITTAL REGISTER

(ER 415 1-10)

CONTRACT NO.

TITLE AND LOCATION: Gravity Flow Culvert Replacement (New Madrid, Missouri)

CONTRACTOR

SPECIFICATION SECTION: 02050

					TYPE OF SUBMITTAL										CLASSIFICATION			CONTRACTOR SCHEDULE DATES			CONTRACTOR ACTION			GOVERNMENT ACTION		
ACTIVITY NO a.	TRANSMITTAL NO b.	ITEM NO c.	SPECIFICATION PARAGRAPH NUMBER d.	DESCRIPTION OF ITEM SUBMITTED e.	DATA f.	DRAWINGS g.	INSTRUCTIONS h.	SCHEDULES i.	STATEMENTS j.	REPORTS k.	CERTIFICATES l.	SAMPLES m.	RECORDS n.	O&M MANUALS o.	INFORMATION ONLY p.	GOVERNMENT APPROVED q.	REVIEWER r.	SUBMIT s.	APPROVAL NEEDED BY t.	MATERIAL NEEDED BY u.	CODE v.	DATE w.	SUBMIT TO GOVERNMENT x.	CODE y.	DATE z.	REMARKS aa.
			1.3	Work Plan					X						X		C									

SUBMITTAL REGISTER

(ER 415 1-10)

CONTRACT NO.

TITLE AND LOCATION: Gravity Flow Culvert Replacement (New Madrid, Missouri)

CONTRACTOR

SPECIFICATION SECTION: 02215

ACTIVITY NO a.	TRANS-MITTAL NO b.	ITEM NO c.	SPECIFICATION PARAGRAPH NUMBER d.	DESCRIPTION OF ITEM SUBMITTED e.	TYPE OF SUBMITTAL: DATA f.	DRAWINGS g.	INSTRUCTIONS h.	SCHEDULES i.	STATEMENTS j.	REPORTS k.	CERTIFICATES l.	SAMPLES m.	RECORDS n.	O&M MANUALS o.	CLASSIFICATION: INFORMATION ONLY p.	GOVERNMENT APPROVED q.	REVIEWER r.	CONTRACTOR SCHEDULE DATES: SUBMIT s.	APPROVAL NEEDED BY t.	MATERIAL NEEDED BY u.	CONTRACTOR ACTION: CODE v.	DATE w.	SUBMIT TO GOVERN-MENT x.	GOVERNMENT ACTION: CODE y.	DATE z.	REMARKS aa.
			2.1.3	Mill Certificate or Affidit							X				X		C									

SUBMITTAL REGISTER

(ER 415 1-10)

CONTRACT NO.

TITLE AND LOCATION: Gravity Flow Culvert Replacement (New Madrid, Missouri)

CONTRACTOR

SPECIFICATION SECTION: 02350

ACTIVITY NO a.	TRANS-MITTAL NO b.	ITEM NO c.	SPECIFICATION PARAGRAPH NUMBER d.	DESCRIPTION OF ITEM SUBMITTED e.	TYPE OF SUBMITTAL: DATA f.	DRAWINGS g.	INSTRUCTIONS h.	SCHEDULES i.	STATEMENTS j.	REPORTS k.	CERTIFICATES l.	SAMPLES m.	RECORDS n.	O&M MANUALS o.	CLASSIFICATION: INFORMATION ONLY p.	GOVERNMENT APPROVED q.	REVIEWER r.	CONTRACTOR SCHEDULE DATES: SUBMIT s.	APPROVAL NEEDED BY t.	MATERIAL NEEDED BY u.	CONTRACTOR ACTION: CODE v.	DATE w.	SUBMIT TO GOVERN-MENT x.	GOVERNMENT ACTION: CODE y.	DATE z.	REMARKS aa.
			1.4.2	Certificate									X		X		C									

SUBMITTAL REGISTER

(ER 415 1-10)

CONTRACT NO.

TITLE AND LOCATION: Gravity Flow Culvert Replacement (New Madrid, Missouri)

CONTRACTOR

SPECIFICATION SECTION: 02544

ACTIVITY NO a.	TRANS-MITTAL NO b.	ITEM NO c.	SPECIFICATION PARAGRAPH NUMBER d.	DESCRIPTION OF ITEM SUBMITTED e.	TYPE OF SUBMITTAL: DATA f.	DRAWINGS g.	INSTRUCTIONS h.	SCHEDULES i.	STATEMENTS j.	REPORTS k.	CERTIFICATES l.	SAMPLES m.	RECORDS n.	O&M MANUALS o.	CLASSIFICATION: INFORMATION ONLY p.	GOVERNMENT APPROVED q.	REVIEWER r.	CONTRACTOR SCHEDULE DATES: SUBMIT s.	APPROVAL NEEDED BY t.	MATERIAL NEEDED BY u.	CONTRACTOR ACTION: CODE v.	DATE w.	SUBMIT TO GOVERN-MENT x.	GOVERNMENT ACTION: CODE y.	DATE z.	REMARKS aa.
			2.1.2	Test Reports						X					X		C									
			2.1.3	Plot of All Sizes of Riprap Used									X		X		C									

SUBMITTAL REGISTER

(ER 415 1-10)

CONTRACT NO.

TITLE AND LOCATION: Gravity Flow Culvert Replacement (New Madrid, Missouri)

CONTRACTOR

SPECIFICATION SECTION: 02546

ACTIVITY NO a.	TRANS-MITTAL NO b.	ITEM NO c.	SPECIFICATION PARAGRAPH NUMBER d.	DESCRIPTION OF ITEM SUBMITTED e.	TYPE OF SUBMITTAL: DATA f.	DRAWINGS g.	INSTRUCTIONS h.	SCHEDULES i.	STATEMENTS j.	REPORTS k.	CERTIFICATES l.	SAMPLES m.	RECORDS n.	O&M MANUALS o.	CLASSIFICATION: INFORMATION ONLY p.	GOVERNMENT APPROVED q.	REVIEWER r.	CONTRACTOR SCHEDULE DATES: SUBMIT s.	APPROVAL NEEDED BY t.	MATERIAL NEEDED BY u.	CONTRACTOR ACTION: CODE v.	DATE w.	SUBMIT TO GOVERN-MENT x.	GOVERNMENT ACTION: CODE y.	DATE z.	REMARKS aa.
			2.2.2	Test Reports						X					X		C									

SUBMITTAL REGISTER

(ER 415 1-10)

CONTRACT NO.

TITLE AND LOCATION: Gravity Flow Culvert Replacement (New Madrid, Missouri)

CONTRACTOR

SPECIFICATION SECTION: 02720

ACTIVITY NO a.	TRANS-MITTAL NO b.	ITEM NO c.	SPECIFICATION PARAGRAPH NUMBER d.	DESCRIPTION OF ITEM SUBMITTED e.	TYPE OF SUBMITTAL: DATA f.	DRAWINGS g.	INSTRUCTIONS h.	SCHEDULES i.	STATEMENTS j.	REPORTS k.	CERTIFICATES l.	SAMPLES m.	RECORDS n.	O&M MANUALS o.	CLASSIFICATION: INFORMATION ONLY p.	GOVERNMENT APPROVED q.	REVIEWER r.	CONTRACTOR SCHEDULE DATES: SUBMIT s.	APPROVAL NEEDED BY t.	MATERIAL NEEDED BY u.	CONTRACTOR ACTION: CODE v.	DATE w.	SUBMIT TO GOVERN-MENT x.	GOVERNMENT ACTION: CODE y.	DATE z.	REMARKS aa.
			1.2	Installation Plan			X								X		C									
			1.2	Grouting Plan					X						X		C									
			1.2	Jacking or Tunneling Plan					X						X		C									
			1.2	Emergency Closure Plan					X						X		C									
			1.2	Pipe									X		X		C									

SUBMITTAL REGISTER

(ER 415 1-10)

CONTRACT NO.

TITLE AND LOCATION: Gravity Flow Culvert Replacement (New Madrid, Missouri)

CONTRACTOR

SPECIFICATION SECTION: 02707

ACTIVITY NO a.	TRANS-MITTAL NO b.	ITEM NO c.	SPECIFICATION PARAGRAPH NUMBER d.	DESCRIPTION OF ITEM SUBMITTED e.	TYPE OF SUBMITTAL: DATA f.	DRAWINGS g.	INSTRUCTIONS h.	SCHEDULES i.	STATEMENTS j.	REPORTS k.	CERTIFICATES l.	SAMPLES m.	RECORDS n.	O&M MANUALS o.	CLASSIFICATION: INFORMATION ONLY p.	GOVERNMENT APPROVED q.	REVIEWER r.	CONTRACTOR SCHEDULE DATES: SUBMIT s.	APPROVAL NEEDED BY t.	MATERIAL NEEDED BY u.	CONTRACTOR ACTION: CODE v.	DATE w.	SUBMIT TO GOVERN-MENT x.	GOVERNMENT ACTION: CODE y.	DATE z.	REMARKS aa.
			3.2	Dewatering Plan						X					X		C									

SUBMITTAL REGISTER

(ER 415 1-10)

CONTRACT NO.

TITLE AND LOCATION: Gravity Flow Culvert Replacement (New Madrid, Missouri)

CONTRACTOR

SPECIFICATION SECTION: 02938

ACTIVITY NO a.	TRANS-MITTAL NO b.	ITEM NO c.	SPECIFICATION PARAGRAPH NUMBER d.	DESCRIPTION OF ITEM SUBMITTED e.	TYPE OF SUBMITTAL: DATA f.	DRAWINGS g.	INSTRUCTIONS h.	SCHEDULES i.	STATEMENTS j.	REPORTS k.	CERTIFICATES l.	SAMPLES m.	RECORDS n.	O&M MANUALS o.	CLASSIFICATION: INFORMATION ONLY p.	GOVERNMENT APPROVED q.	REVIEWER r.	CONTRACTOR SCHEDULE DATES: SUBMIT s.	APPROVAL NEEDED BY t.	MATERIAL NEEDED BY u.	CONTRACTOR ACTION: CODE v.	DATE w.	SUBMIT TO GOVERN-MENT x.	GOVERNMENT ACTION: CODE y.	DATE z.	REMARKS aa.
			1.3	Work Plan					X						X		C									
			1.3	Soil Test						X					X		C									
			1.3	Material Certificates							X				X		C									
			1.3	Maintenance Record									X		X		C									
			1.3	Pesticides									X		X		C									

SUBMITTAL REGISTER

(ER 415 1-10)

CONTRACT NO.

TITLE AND LOCATION: Gravity Flow Culvert Replacement (New Madrid, Missouri)

CONTRACTOR

SPECIFICATION SECTION: 03100

ACTIVITY NO a.	TRANS-MITTAL NO b.	ITEM NO c.	SPECIFICATION PARAGRAPH NUMBER d.	DESCRIPTION OF ITEM SUBMITTED e.	TYPE OF SUBMITTAL: DATA f.	DRAWINGS g.	INSTRUCTIONS h.	SCHEDULES i.	STATEMENTS j.	REPORTS k.	CERTIFICATES l.	SAMPLES m.	RECORDS n.	O&M MANUALS o.	CLASSIFICATION: INFORMATION ONLY p.	GOVERNMENT APPROVED q.	REVIEWER r.	CONTRACTOR SCHEDULE DATES: SUBMIT s.	APPROVAL NEEDED BY t.	MATERIAL NEEDED BY u.	CONTRACTOR ACTION: CODE v.	DATE w.	SUBMIT TO GOVERN-MENT x.	GOVERNMENT ACTION: CODE y.	DATE z.	REMARKS aa.
			1.4.2	Materials	X										X		C									
			1.4.1	Shop Drawings		X									X		E									

SUBMITTAL REGISTER

(ER 415 1-10)

CONTRACT NO.

TITLE AND LOCATION: Gravity Flow Culvert Replacement (New Madrid, Missouri)

CONTRACTOR

SPECIFICATION SECTION: 03200

ACTIVITY NO a.	TRANS-MITTAL NO b.	ITEM NO c.	SPECIFICATION PARAGRAPH NUMBER d.	DESCRIPTION OF ITEM SUBMITTED e.	TYPE OF SUBMITTAL: DATA f.	DRAWINGS g.	INSTRUCTIONS h.	SCHEDULES i.	STATEMENTS j.	REPORTS k.	CERTIFICATES l.	SAMPLES m.	RECORDS n.	O&M MANUALS o.	CLASSIFICATION: INFORMATION ONLY p.	GOVERNMENT APPROVED q.	REVIEWER r.	CONTRACTOR SCHEDULE DATES: SUBMIT s.	APPROVAL NEEDED BY t.	MATERIAL NEEDED BY u.	CONTRACTOR ACTION: CODE v.	DATE w.	SUBMIT TO GOVERN-MENT x.	GOVERNMENT ACTION: CODE y.	DATE z.	REMARKS aa.
			1.6.2	Shop Drawings		X									X		E									
			1.6.3	Test Reports						X					X		C									

SUBMITTAL REGISTER

(ER 415 1-10)

CONTRACT NO.

TITLE AND LOCATION: Gravity Flow Culvert Replacement (New Madrid, Missouri)

CONTRACTOR

SPECIFICATION SECTION: 03300

ACTIVITY NO a.	TRANS-MITTAL NO b.	ITEM NO c.	SPECIFICATION PARAGRAPH NUMBER d.	DESCRIPTION OF ITEM SUBMITTED e.	TYPE OF SUBMITTAL: DATA f.	DRAWINGS g.	INSTRUCTIONS h.	SCHEDULES i.	STATEMENTS j.	REPORTS k.	CERTIFICATES l.	SAMPLES m.	RECORDS n.	O&M MANUALS o.	CLASSIFICATION: INFORMATION ONLY p.	GOVERNMENT APPROVED q.	REVIEWER r.	CONTRACTOR SCHEDULE DATES: SUBMIT s.	APPROVAL NEEDED BY t.	MATERIAL NEEDED BY u.	CONTRACTOR ACTION: CODE v.	DATE w.	SUBMIT TO GOVERN-MENT x.	GOVERNMENT ACTION: CODE y.	DATE z.	REMARKS aa.
			1.5	Concrete Mix Proportioning	X										X		C									
			1.5	Conveying Equipment & Materials	X										X		C									
			1.5	Placing Equipment & Methods	X										X		C									
			1.5	Testing Technicians					X						X		C									
			1.5	Concrete Construction Inspector					X						X		C									
			1.5	Construction Joint Treatment					X						X		C									
			1.5	Curing and Protection					X						X		C									
			1.5	Cold-Weather Placing					X						X		C									
			1.5	Hot-Weather Placing					X						X		C									
			1.5	Tests and Inspections					X						X		C									
			1.5	Cementitious Materials						X					X		C									
			1.5	Impervious Sheet Curing Material							X				X		C									
			1.5	Air- Entraining Admixture							X						C									
			1.5	Other Chemical Admixture							X						C									
			1.5	Membrane Forming Curing Compound							X						C									
			1.5	Epoxy Resin							X						C									
			1.5	Latex Bonding							X						C									
			1.5	Nonshrink Grout							X						C									

SUBMITTAL REGISTER

(ER 415 1-10)

CONTRACT NO.

TITLE AND LOCATION: Gravity Flow Culvert Replacement (New Madrid, Missouri)

CONTRACTOR

SPECIFICATION SECTION: 03304

ACTIVITY NO a.	TRANS-MITTAL NO b.	ITEM NO c.	SPECIFICATION PARAGRAPH NUMBER d.	DESCRIPTION OF ITEM SUBMITTED e.	TYPE OF SUBMITTAL: DATA f.	DRAWINGS g.	INSTRUCTIONS h.	SCHEDULES i.	STATEMENTS j.	REPORTS k.	CERTIFICATES l.	SAMPLES m.	RECORDS n.	O&M MANUALS o.	CLASSIFICATION: INFORMATION ONLY p.	GOVERNMENT APPROVED q.	REVIEWER r.	CONTRACTOR SCHEDULE DATES: SUBMIT s.	APPROVAL NEEDED BY t.	MATERIAL NEEDED BY u.	CONTRACTOR ACTION: CODE v.	DATE w.	SUBMIT TO GOVERN-MENT x.	GOVERNMENT ACTION: CODE y.	DATE z.	REMARKS aa.
			1.3	Grouting Plan					X						X		C									

ENG FORM 4288, Oct 99

SUBMITTAL REGISTER

(ER 415 1-10)

CONTRACT NO.

TITLE AND LOCATION: Gravity Flow Culvert Replacement (New Madrid, Missouri)

CONTRACTOR

SPECIFICATION SECTION: 05120

ACTIVITY NO a.	TRANS-MITTAL NO b.	ITEM NO c.	SPECIFICATION PARAGRAPH NUMBER d.	DESCRIPTION OF ITEM SUBMITTED e.	TYPE OF SUBMITTAL: DATA f.	DRAWINGS g.	INSTRUCTIONS h.	SCHEDULES i.	STATEMENTS j.	REPORTS k.	CERTIFICATES l.	SAMPLES m.	RECORDS n.	O&M MANUALS o.	CLASSIFICATION: INFORMATION ONLY p.	GOVERNMENT APPROVED q.	REVIEWER r.	CONTRACTOR SCHEDULE DATES: SUBMIT s.	APPROVAL NEEDED BY t.	MATERIAL NEEDED BY u.	CONTRACTOR ACTION: CODE v.	DATE w.	SUBMIT TO GOVERN-MENT x.	GOVERNMENT ACTION: CODE y.	DATE z.	REMARKS aa.
			1.3	Shop Drawings		X										X	E									
			1.3	Mill Test Reports						X					X		C									
			1.3	Welder Qualifications						X					X		C									
			1.3	Welder Inspector							X				X		C									
			1.3	Fabrication Plant Cert.						X					X		C									

SUBMITTAL REGISTER

(ER 415 1-10)

CONTRACT NO.

TITLE AND LOCATION: Gravity Flow Culvert Replacement (New Madrid, Missouri)

CONTRACTOR

SPECIFICATION SECTION: 05914

ACTIVITY NO a.	TRANS-MITTAL NO b.	ITEM NO c.	SPECIFICATION PARAGRAPH NUMBER d.	DESCRIPTION OF ITEM SUBMITTED e.	TYPE OF SUBMITTAL: DATA f.	DRAWINGS g.	INSTRUCTIONS h.	SCHEDULES i.	STATEMENTS j.	REPORTS k.	CERTIFICATES l.	SAMPLES m.	RECORDS n.	O&M MANUALS o.	CLASSIFICATION: INFORMATION ONLY p.	GOVERNMENT APPROVED q.	REVIEWER r.	CONTRACTOR SCHEDULE DATES: SUBMIT s.	APPROVAL NEEDED BY t.	MATERIAL NEEDED BY u.	CONTRACTOR ACTION: CODE v.	DATE w.	SUBMIT TO GOVERN-MENT x.	GOVERNMENT ACTION: CODE y.	DATE z.	REMARKS aa.
			1.3	Material Mechanical & Equipment	X											X	C									
			1.3	Design&Performance Requirements	X										X		C									
			1.3	Shop Assembly & Testing	X										X		C									
			1.3	Field Testing	X											X	C									
			1.3	Detail Drawings		X										X	E									
			1.3	Materials Order				X							X		C									
			1.3	Material List				X							X		C									
			1.3	Shipping Bill				X							X		C									
			1.3	Shop Tests, Inspections, and Verifications						X					X		C									
			1.3	Acceptance Trial Operation and Test						X					X		C									
			1.3	Materials Disposition Records									X		X		C									
			1.3	Operations & Mainte-nance Manuals										X		X	C									

DIVISION 1 - GENERAL REQUIREMENTS

SECTION 01451

CONTRACTOR QUALITY CONTROL

TABLE OF CONTENTS

PART 1 GENERAL
1.1 REFERENCES
1.2 PAYMENT
PART 2 PRODUCTS (Not Applicable)
PART 3 EXECUTION
3.1 GENERAL
3.2 QUALITY CONTROL PLAN
3.2.1 General
3.2.2 Content of the CQC Plan
3.2.3 Acceptance of Plan
3.2.4 Notification of Changes
3.3 COORDINATION MEETING
3.4 QUALITY CONTROL ORGANIZATION
3.4.1 CQC System Manager
3.4.2 CQC Staff
3.4.3 Additional Requirement
3.5 SUBMITTALS
3.6 CONTROL
3.6.1 Preparatory Phase
3.6.2 Initial Phase
3.6.3 Follow-up Phase
3.6.4 Additional Preparatory and Initial Phases
3.7 TESTS
3.7.1 Testing Procedure
3.7.2 Testing Laboratories
3.7.2.1 Laboratory Validation
3.7.2.2 Capability Check
3.7.2.3 Capability Recheck
3.7.3 On-Site Laboratory
3.7.4 Furnishing or Transportation of Samples for Testing
3.8 COMPLETION INSPECTION
3.9 DOCUMENTATION
3.10 NOTIFICATION OF NONCOMPLIANCE

SECTION 01451

CONTRACTOR QUALITY CONTROL

PART 1 GENERAL

1.1 REFERENCES

The publications listed below form a part of this specification to the extent referenced. The publications are referred to in the text by basic designation only.

AMERICAN SOCIETY FOR TESTING AND MATERIALS (ASTM)

ASTM D 3740	(1994a) Minimum Requirements for Agencies Engaged in the Testing and/or Inspection of Soil and Rock as Used in Engineering Design and Construction
ASTM E 329	(1993b) Agencies Engaged in the Testing and/or Inspection of Materials Used in Construction

1.2 PAYMENT

Separate payment will not be made for providing and maintaining an effective Quality Control program, and all costs associated therewith shall be included in the applicable unit prices or lump-sum prices contained in the Bidding Schedule.

PART 2 PRODUCTS (Not Used)

PART 3 EXECUTION

3.1 GENERAL

The Contractor is responsible for quality control and shall establish and maintain an effective quality control system in compliance with the Contract Clause entitled "Inspection of Construction." The quality control system shall consist of plans, procedures, and organization necessary to produce an end product which complies with the contract requirements. The system shall cover all construction operations, both on-site and off-site, and shall be keyed to the proposed construction sequence.

3.2 QUALITY CONTROL PLAN

3.2.1 General

The Contractor shall furnish for review by the Government, not later than 21 calendar days after receipt of Notice of Award of the contract, the Contractor Quality Control (CQC) Plan proposed to implement the requirements of the Contract Clause entitled "Inspection of Construction." The plan shall identify personnel, procedures, control, instructions, test, records, and forms to be used. The Government will consider an interim plan for the first 15 days of operation. Construction will be permitted to begin only after acceptance of the CQC Plan or acceptance of an interim plan applicable to the particular feature of work to be started. Work outside of the features of work included in an accepted interim plan will not be permitted to begin until acceptance of a CQC Plan or another interim plan containing the additional features of work to be started.

3.2.2 Content of the CQC Plan

The CQC plan shall include, as a minimum, the following to cover all construction operations, both on-site and off-site, including work by subcontractors, fabricators, suppliers, and purchasing agents:

a. A description of the quality control organization, including a chart showing lines of authority and acknowledgment that the CQC staff shall implement the three phase control system for all aspects of the work specified. The staff shall include a CQC system manager who shall report to the project manager or someone higher in the Contractor's organization. Project manager in this context shall mean the individual with responsibility for the overall management of the project including quality and production.

b. The name, qualifications (in resume format), duties, responsibilities, and authorities of each person assigned a CQC function.

c. A copy of the letter to the CQC System Manager signed by an authorized official of the firm which describes the responsibilities and delegates sufficient authorities to adequately perform the functions of the CQC System Manager, including authority to stop work which is not in compliance with the contract. The CQC System Manager shall issue letters of direction to all other various quality control representatives outlining duties, authorities, and responsibilities. Copies of these letters will also be furnished to the Government.

d. Procedures for scheduling, reviewing, certifying, and managing submittals, including those of subcontractors, off-site fabricators, suppliers, and purchasing agents. These procedures shall be in accordance with SECTION 01300-SUBMITTALS.

e. Control, verification, and acceptance testing procedures for each specific test to include the test name, specification paragraph requiring test, feature of work to be tested, test frequency, testing laboratory, and person responsible for each test. (Laboratory facilities will be approved by the Contracting Officer.)

f. Procedures for tracking preparatory, initial, and follow-up control phases and control,

verification, and acceptance tests including documentation.

g. Procedures for tracking construction deficiencies from identification through acceptable corrective action. These procedures will establish verification that identified deficiencies have been corrected.

h. Reporting procedures, including proposed reporting formats.

i. A list of the definable features of work. A definable feature of work is a task which is separate and distinct from other tasks and has separate control requirements. It could be identified by different trades or disciplines, or it could be work by the same trade in a different environment. Although each section of the specifications may generally be considered as a definable feature of work, there are frequently more than one definable feature under a particular section. This list will be agreed upon during the coordination meeting.

3.2.3 Acceptance of Plan

Acceptance of the Contractor's plan is required prior to the start of construction. Acceptance is conditional and will be predicated on satisfactory performance during the construction. The Government reserves the right to require the Contractor to make changes in his CQC plan and operations including removal of personnel, as necessary, to obtain the quality specified.

3.2.4 Notification of Changes

After acceptance of the QC plan, the Contractor shall notify the Contracting Officer in writing a minimum of seven calendar days prior to any proposed change. Proposed changes are subject to acceptance by the Contracting Officer.

3.3 COORDINATION MEETING

After the Preconstruction Conference, before start of construction, and prior to acceptance by the Government of the Quality Control Plan, the Contractor shall meet with the Contracting Officer or Authorized Representative and discuss the Contractor's quality control system. During the meeting, a mutual understanding of the system details shall be developed, including the forms for recording the CQC operations, control activities, testing, administration of the system for both on-site and off-site work, and the interrelationship of Contractor's Management and control with the Government's Quality Assurance. Minutes of the meeting shall be prepared by the Government and signed by both the Contractor and the Contracting Officer. The minutes shall become a part of the contract file. There may be occasions when subsequent conferences will be called by either party to reconfirm mutual understandings and/or address deficiencies in the CQC system or procedures which may require corrective action by the Contractor.

3.4 QUALITY CONTROL ORGANIZATION

3.4.1 CQC System Manager

The Contractor shall identify an individual within his organization at the worksite who shall be responsible for overall management of CQC and have the authority to act in all CQC matters for the Contractor. This CQC System Manager shall be subject to acceptance by the Contracting Officer. The CQC System Manager shall be assigned as System Manager but may have other duties in addition to quality control.

3.4.2 CQC Staff

A staff shall be maintained under the direction of the CQC System Manager to perform all CQC activities. An alternate will be identified to serve in the absence of the CQC System Manager. The staff must be of sufficient size to ensure adequate CQC coverage of all work phases, work shifts, and work crews involved in the construction. These personnel may perform other duties, but must be fully qualified by experience and technical training to perform their assigned CQC responsibilities and must be allowed sufficient time to carry out these responsibilities. The CQC plan will clearly state the duties and responsibilities of each staff member. All CQC Staff members or replacements shall be subject to acceptance by the Contracting Officer.

3.4.3 Additional Requirement

In addition to the above requirements, the CQC System Manager and his alternate shall complete the course entitled "Construction Quality Management for Contractors". This course is periodically offered by the Memphis District as well as other Corps Districts.

3.5 SUBMITTALS

Submittals shall be in accordance with SECTION 01300 – SUBMITTALS. The CQC organization shall be responsible for certifying that all submittals are in compliance with the contract requirements.

3.6 CONTROL

The controls shall include at least three phases of control to be conducted by the CQC System Manager for all definable features of work, as follows:

3.6.1 Preparatory Phase

This phase shall be performed prior to beginning work on each definable feature of work and shall include:

a. A review of each paragraph of applicable specifications.

b. A review of the contract drawings.

c. A check to assure that all materials and/or equipment have been tested, submitted, and approved.

d. A check to assure that provisions have been made to provide required control inspection and testing.

e. Examination of the work area to assure that all required preliminary work has been completed and is in compliance with the contract.

f. A physical examination of required materials, equipment, and sample work to assure that they are on hand, conform to approved shop drawings or submitted data, and are properly stored.

g. A review of the appropriate activity hazard analysis to assure safety requirements are met.

h. Discussion of procedures for constructing the work including repetitive deficiencies. Document construction tolerances and workmanship standards for that phase of work.

i. A check to ensure that the portion of the plan for the work to be performed has been accepted by the Contracting Officer.

j. The Government shall be notified at least 24 hours in advance of beginning any of the required action of the preparatory phase. This phase shall include a meeting conducted by the CQC System Manager and attended by the superintendent, other CQC personnel (as applicable), and the foreman responsible for the definable feature. The results of the preparatory phase actions shall be documented by separate minutes prepared by the CQC System Manager and attached to the daily CQC report. The Contractor shall instruct applicable workers as to the acceptable level of workmanship required in order to meet contract specifications.

3.6.2 Initial Phase

This phase shall be accomplished at the beginning of a definable feature of work. The following shall be accomplished:

a. A check of preliminary work to ensure that it is in compliance with contract requirements. Review minutes of the preparatory meeting.

b. Verification of full contract compliance. Verify required control inspection and testing.

c. Establish level of workmanship and verify that it meets minimum acceptable workmanship standards. Compare with sample panels as appropriate.

d. Resolve all differences.

e. Check safety to include compliance with and upgrading of the safety plan and activity hazard analysis. Review the activity analysis with each worker.

f. The Government shall be notified at least 24 hours in advance of beginning the initial phase. Separate minutes of this phase shall be prepared by the CQC System Manager and attached to the daily CQC report. Exact location of initial phase shall be indicated for future reference and comparison with follow-up phases.

g. The initial phase should be repeated for each new crew to work on-site, or any time acceptable specified quality standards are not being met.

3.6.3 Follow-up Phase

Daily checks shall be performed to assure continuing compliance with contract requirements, including control testing, until completion of the particular feature of work. The checks shall be made a matter of record in the CQC documentation. Final follow-up checks shall be conducted and all deficiencies corrected prior to the start of additional features of work which may be affected by the deficient work. The Contractor shall not build upon or conceal non-conforming work.

3.6.4 Additional Preparatory and Initial Phases

As determined by the Government, additional preparatory and initial phases may be conducted on the same definable features of work if the quality of on-going work is unacceptable, if there are changes in the applicable CQC staff, on-site production supervision or work crew, if work on a definable feature is resumed after a substantial period of inactivity, or if other problems develop.

3.7 TESTS

3.7.1 Testing Procedure

The Contractor shall perform specified or required tests to verify that control measures are adequate to provide a product which conforms to contract requirements. Testing includes operation and/or acceptance tests when specified. The Contractor shall procure the services of a Corps of Engineers approved testing laboratory or establish an approved testing laboratory at the project site in accordance with paragraph 3.7.2 below. The Contractor shall perform the following activities and record and provide the following data:

a. Verify that testing procedures comply with contract requirements.

b. Verify that facilities and testing equipment are available and comply with testing standards.

c. Check test instrument calibration data against certified standards.

d. Verify that recording forms and test identification control number system, including all of the test documentation requirements, have been prepared.

e. Results of all tests taken, both passing and failing tests, will be recorded on the CQC report for the date taken. Specification paragraph reference, location where tests were taken, and the sequential control number identifying the test will be given. If approved by the Contracting Officer, actual test reports may be submitted later with a reference to the test number and date taken. An information copy of tests performed by an off-site or commercial test facility will be provided directly to the Contracting Officer. Failure to submit timely test reports as stated may result in nonpayment for related work performed and disapproval of the test facility for this contract.

3.7.2 Testing Laboratories

3.7.2.1 Laboratory Validation

All testing of soil, gravel, aggregate, stone, concrete, and asphalt shall be performed by a testing laboratory validated by the Material Testing Center (MTC) of the Corps of Engineers. Refer to the MTC website http://www.wes.army.mil/SL/MTC/ValStatesTbl.htm for a complete and current list of validated commercial laboratories. If the Contractor proposes to use a commercial laboratory that is not validated or set up an on-site laboratory, he shall make arrangements for validation by contacting the Material Testing Center at Waterways Experiment Station, Vicksburg, Mississippi, telephone number: 601-634-3974, www.wes.army.mil/SL/MTC/inspection.htm. The Government will not be responsible for any cost associated with the validation of laboratories that are not currently validated. The validation process could take 30 to 90 days or more. The Contractor shall be responsible for determining the amount of time required for the validation of the proposed laboratory and accounting for this event in his progress schedule. If the Contractor elects to use a non-validated laboratory, work requiring testing shall not commence until the laboratory has been validated by MTC.

3.7.2.2 Capability Check

The Contracting Officer reserves the right to check laboratory equipment in the proposed laboratory for compliance with the standards set forth in the contract specifications and to check the laboratory technician's testing procedures and techniques. Laboratories utilized for testing soils, concrete, asphalt, and steel shall meet criteria detailed in ASTM D 3740 and ASTM E 329.

3.7.2.3 Capability Recheck

If the selected laboratory fails the capability check, the Contractor will be assessed a charge to reimburse the Government for each succeeding recheck of the laboratory or the checking of a subsequently selected laboratory. Such costs will be deducted from the contract amount due the Contractor. There will be no extension of time allowed due to necessity to perform capability rechecks.

3.7.3 On-Site Laboratory

The Contracting Officer reserves the right to utilize the Contractor's control testing laboratory and equipment to make assurance tests and to check the Contractor's testing procedures, techniques, and test results at no additional cost to the Government.

3.7.4 Furnishing or Transportation of Samples for Testing

Costs incidental to the transportation of samples or materials will be borne by the Contractor. Samples of materials for test verification and acceptance testing by the Government shall be delivered by the Contractor to a location specified by the Contracting Officer.

3.8 COMPLETION INSPECTION

At the completion of all work or any increment thereof established by a completion time stated in the SPECIAL CONTRACT REQUIREMENTS entitled "Commencement, Prosecution, and Completion of Work," or stated elsewhere in the specifications, the CQC System Manager shall conduct an inspection of the work and develop a "punch list" of items which do not conform to the approved drawings and specifications. Such a list of deficiencies shall be included in the CQC documentation, as required by paragraph DOCUMENTATION below, and shall include the estimated date by which the deficiencies will be corrected. The CQC System Manager or staff shall make a second inspection to ascertain that all deficiencies have been corrected and so notify the Government. These inspections and any deficiency corrections required by this paragraph will be accomplished within the time stated for completion of the entire work or any particular increment thereof if the project is divided into increments by separate completion dates.

3.9 DOCUMENTATION

The Contractor shall maintain current records providing factual evidence that required quality control activities and/or tests have been performed. These records shall include the work of sub-contractors and suppliers and shall be on an acceptable form that includes, as a minimum, the following information:

a. Contractor/subcontractor and their area of responsibility.

b. Operating plant/equipment with hours worked, idle, or down for repair.

c. Work performed each day, giving location, description, and by whom. When Network Analysis (NAS) is used, identify each phase of work performed each day by NAS activity number.

d. Test and/or control activities performed with results and references to specifications/drawings requirements. The control phase should be identified (Preparatory, Initial, Follow-up). List deficiencies noted along with corrective action.

e. Quantity of materials received at the site with statement as to acceptability, storage, and reference to specifications/drawings requirements.

f. Submittals reviewed, with contract reference, by whom, and action taken.

g. Off-site surveillance activities, including actions taken.

h. Job safety evaluations stating what was checked, results, and instructions or corrective actions.

i. Instructions given/received and conflicts in plans and/or specifications.

j. Contractor's verification statement.

These records shall indicate a description of trades working on the project; the number of personnel working; weather conditions encountered; and any delays encountered. These records shall cover both conforming and deficient features and shall include a statement that equipment and materials incorporated in the work and workmanship comply with the contract. The original and two copies of these records in report form shall be furnished to the Government daily within 24 hours after the date(s) covered by the report, except that reports need not be submitted for days on which no work is performed. As a minimum, one report shall be prepared and submitted for every seven days of no work and on the last day of a no work period. All calendar days shall be accounted for throughout the life of the contract. The first report following a day of no work shall be for that day only. Reports shall be signed and dated by the CQC System Manager. The report from the CQC System Manager shall include copies of test reports and copies of reports prepared by all subordinate quality control personnel.

3.10 NOTIFICATION OF NONCOMPLIANCE

The Contracting Officer will notify the Contractor of any detected noncompliance with the foregoing requirements. The Contractor shall take immediate corrective action after receipt of such notice. Such notice, when delivered to the Contractor at the worksite, shall be deemed sufficient for the purpose of notification. If the Contractor fails or refuses to comply promptly, the Contracting Officer may issue an order stopping all or part of the work until satisfactory corrective action has been taken. No part of the time lost due to such stop orders shall be made the subject of claim for extension of time or for excess costs or damages by the Contractor.

-- End of Section --

DIVISION **1 -** GENERAL REQUIREMENTS

SECTION 01452

PROJECT SIGN, BARRICADES, AND TRAFFIC CONTROL SIGNS

TABLE OF CONTENTS

PART 1 GENERAL
- 1.1 SCOPE
- 1.2 PROJECT SIGN
- 1.3 BARRICADES AND TRAFFIC CONTROL SIGNS
  - 1.3.1 General
  - 1.3.2 Traffic Control Signs
  - 1.3.3 Barricades
- 1.4 PAYMENT

PART 2 PRODUCTS (Not Applicable)

PART 3 EXECUTION (Not Applicable)

SECTION 01452

PROJECT SIGN, BARRICADES, AND TRAFFIC CONTROL SIGNS

PART 1 GENERAL

1.1 SCOPE

The work covered by this section consists of furnishing, erecting, maintaining, and removing project sign, barricades, and traffic control signs.

1.2 PROJECT SIGN

The Contractor shall furnish, erect, and maintain one double faced project sign or two single faced project signs at the culvert site or other appropriate site at the specific location designated by the Contracting Officer. The signs shall be constructed of ¾-inch marine grade plywood, or 22 gage metal, mounted on a substantial framework of 2-inch material. Size, lettering, color and paint shall conform to the details shown on the drawing "Temporary Project Sign" included at the end of this section. Upon request, the Government will furnish without cost to the Contractor two decals of the Engineer Castle. The sign shall be erected as soon as practicable, but not later than 15 calendar days after the date established for commencement of work. The sign shall be removed upon completion of all other construction work under the contract and will become the property of the Contractor.

1.3 BARRICADES AND TRAFFIC CONTROL SIGNS

1.3.1 General

Barricades and traffic control signs shall conform to the "Manual on Uniform Traffic Control Devices for Streets and Highways," Current Edition.

1.3.2 Traffic Control Signs

The Contractor shall erect, maintain and remove traffic control signs as necessary to inform the public of his construction activities. The Rll-4 signs shall be set up prior to the start of construction. Signs shall be properly maintained and shall be removed when no longer needed. Signs shall be kept in proper position, clean, and legible at all times. Damaged, defaced, or dirty signs shall be cleaned, repaired, or replaced. Sign supports shall be neatly constructed and shall be cleaned or repaired as necessary. Signs may be mounted on a single post except that signs wider than 48-inches or larger than 10 square feet in area shall be mounted on two posts. Signs that are to convey their messages during hours of darkness shall be reflective or illuminated.

1.3.3 Barricades

The barricades shall be erected at the locations as designated by the Contracting Officer. When the construction of the culvert is complete and the levee and new roadway are ready to receive traffic, the barricades shall be removed.

1.4 PAYMENT

Work under this section will be considered an incidental obligation of the Contractor.

PART 2 PRODUCTS (Not Applicable)

PART 3 EXECUTION (Not Applicable)

** End of Section **

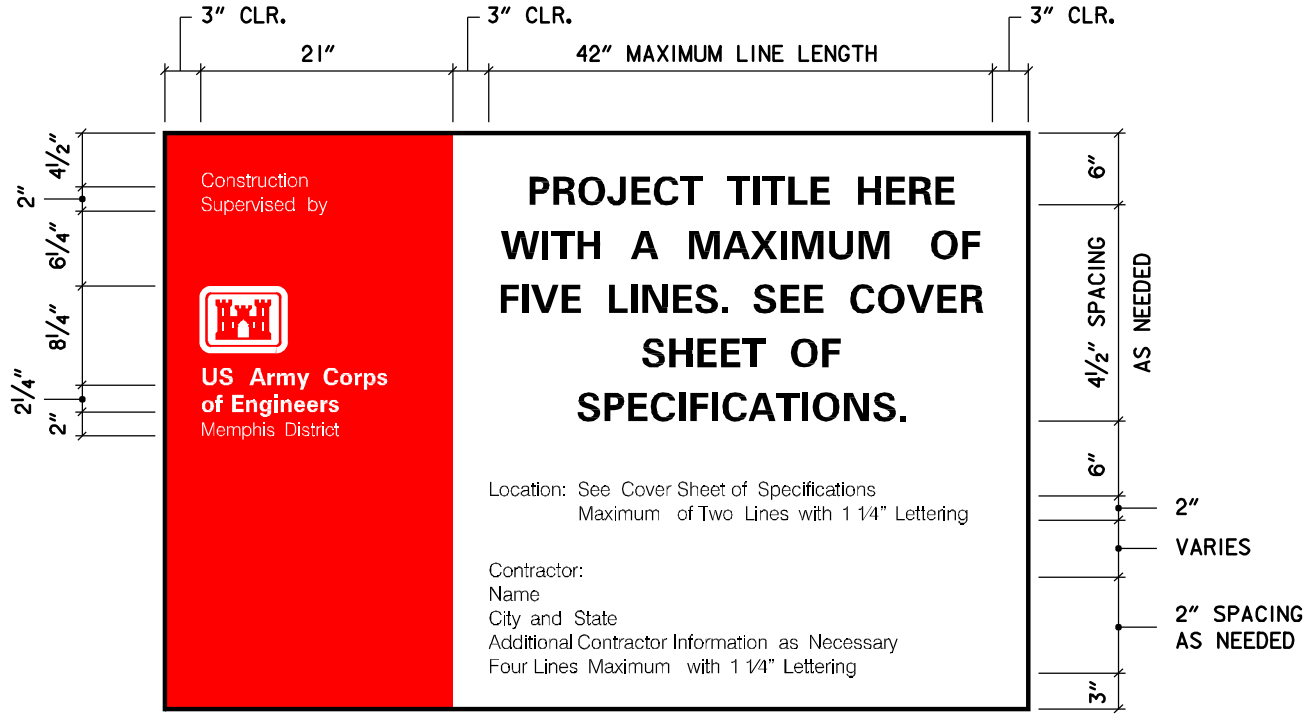

ELEVATION

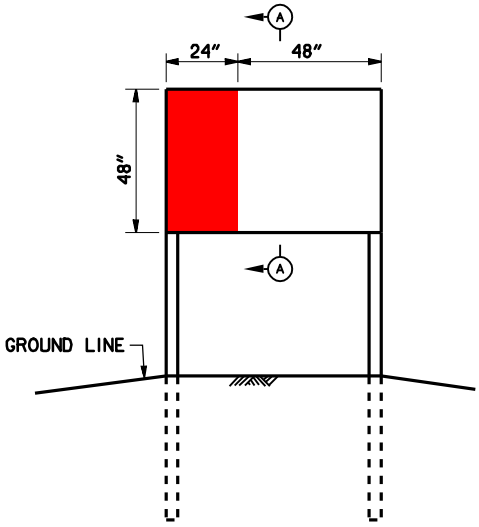

ELEVATION

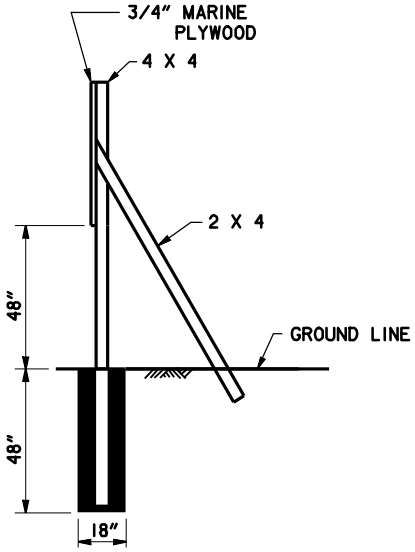

SECTION A–A

SPECIFICATIONS

1. SIGN PANEL SHALL BE 4' x 6' x 3/4" MARINE PLYWOOD OR 22 GAGE SHEET METAL.
2. POSTS AND BRACING SHALL BE TREATED, NO.1 GRADE YELLOW PINE.
3. ALL EXPOSED SURFACES SHALL BE GIVEN ONE COAT OF LINSEED OIL AND WIPED PRIOR TO PRIMING.
4. ALL EXPOSED SURFACES SHALL BE GIVEN ONE COAT OF WHITE AS PRIMER. SECOND COAT SHALL BE COMMUNICATIONS RED ON LEFT AND WHITE ELSEWHERE.
5. THE LEFT SECTION SHALL BE RED WITH WHITE LEGEND. THE RIGHT SECTION SHALL BE WHITE WITH BLACK LEGEND.
6. PAINT SHALL BE BENJAMIN MOORE NO. 120-60 POLY-SILICONE ENAMEL OR APPROVED
7. ALL LETTERING SHALL BE 1 1/4" EXCEPT FOR THE WORDS "US Army Corps of Engineers" AND THE PROJECT TITLE. THE WORDS "US Army Corps of Engineers" SHALL BE 1 1/2" TALL. THE PROJECT TITLE LETTERING SHALL BE A MINIMUM OF 1 1/2" TALL AND A MAXIMUM OF 3 1/2" TALL. THE LETTERING SIZE SHALL BE CHOSEN SUCH THAT LARGEST POSSIBLE LETTERS ARE USED WITHOUT EXCEEDING A MAXIMUM LINE LENGTH OF 42". THE NUMBER OF LINES IN THE PROJECT TITLE SHALL MATCH THAT SHOWN ON THE COVER SHEET OF THE SPECIFICATIONS.

SCALE: NONE JUNE 1998

U.S. ARMY ENGINEER DISTRICT, MEMPHIS
CORPS OF ENGINEERS
MEMPHIS, TENNESSEE

TEMPORARY PROJECT SIGN

DIVISION 2 - SITE WORK

SECTION 02050

DEMOLITION

TABLE OF CONTENTS

PART 1 GENERAL
- 1.1 REFERENCES
- 1.2 GENERAL REQUIREMENTS
- 1.3 SUBMITTALS
- 1.4 PROTECTION
  - 1.4.1 Protection of Personnel
  - 1.4.2 Protection of Existing Property
  - 1.4.3 Environmental Protection
- 1.5 BURNING
- 1.6 USE OF EXPLOSIVES

PART 2 PRODUCTS (Not Applicable)

PART 3 EXECUTION
- 3.1 EXISTING OUTLET SLUICE GATE CONTROL TOWER
- 3.2 EXISTING SLUICE GATE AND GATE LIFT ASSEMBLY
- 3.3 UTILITIES
- 3.4 BACKFILL REQUIREMENTS
- 3.5 DISPOSITION OF MATERIAL
  - 3.5.1 Material Salvaged for the Contractor
  - 3.5.2 Unsalvageable Material
- 3.6 CLEAN UP

SECTION 02050

DEMOLITION

PART 1 GENERAL

1.1 REFERENCES

The publications listed below form a part of this specification to the extent referenced. The publications are referred to in the text by basic designation only.

ENGINEERING MANUALS (EM)

EM385-1-1	(1996) U.S. Army Corps of Engineers Safety and Health Requirements Manual

1.2 GENERAL REQUIREMENTS

The work includes the following items:

(1) Removal of one (1) existing sluice gate, operator, control tower and reinforced concrete apron for the outlet structure of the 2' x 2.1' box culvert

(2) Pressure grout fill the 2' x 2.1' box culvert

(3) Backfill areas of removal/demolition with earth to levee fill compaction requirements and match existing grade

(4) Removal of one (1) existing flared end section.

(5) Demolition of the existing sluice gate, operator, control tower and reinforced concrete apron, removal of the existing flared end section and pressure grouting of the 2' x 2.1' box culvert will not be allowed until the new facility has been accepted as functional by the Contracting Officer.

The Contractor will remove and dispose of all materials in this item of work off the demolition site. The Contractor shall be responsible for disposal at a site approved for such disposal. The Contractor shall pressure grout the existing gravity flow culvert and appurtenances as shown on the contract drawings and in accordance with SECTION 3304, PRESSURE GROUTING, of these specifications. The Contractor shall remove resulting rubbish and debris as shown on contract drawings or specified herein. Rubbish and debris shall be removed from Government property daily, unless otherwise directed, to avoid accumulation at the demolition site. Materials that cannot be removed daily shall be stored in areas specified by the Contracting Officer. In the interest of occupational

safety and health, the work shall be performed in accordance with EM 385-1-1, Section 23, Demolition, and other applicable Sections.

1.3 SUBMITTALS

Government approval is required for submittals with a "GA" designation; submittals having an "FIO" designation are for information only.

SD-08 Statements

Work Plan; FIO

The procedures proposed for the accomplishment of the work. The procedures shall provide for safe conduct of the work, including procedures and methods to provide necessary supports, lateral bracing and shoring when required, protection of property which is to remain undisturbed and coordination with other work in progress.

The procedures shall include a detailed description of the methods and equipment to be used for each operation, and the sequence of operations in accordance with EM 385-1-1.

1.4 PROTECTION

1.4.1 Protection of Personnel

During the demolition work, the Contractor shall continuously evaluate the condition of the structure being demolished and take immediate action to protect all personnel working in and around the demolition site. No structural element will be allowed to be left standing without sufficient bracing, shoring, or lateral support to prevent collapse or failure while workmen remove debris or perform other work in the immediate area.

Structural components that are designed and constructed to stand without lateral support or shoring, and are determined to be in stable condition, may be allowed to remain standing without additional bracing, shoring, or lateral support until demolished. The Contractor shall ensure that no elements determined to be unstable are left unsupported and shall be responsible for placing and securing bracing, shoring, or lateral supports as may be required as a result of any cutting, removal, or demolition work performed under this contract.

1.4.2 Protection of Existing Property

Before beginning any demolition work, the Contractor shall survey the site and examine the drawings and specifications to determine the extent of the work. the contractor shall take necessary precautions to avoid damage to existing items to remain in place. Any damaged items shall be repaired or replaced as approved by the Contracting Officer. The Contractor shall coordinate the work of this section with all other work and shall construct and maintain shoring, bracing, and supports as required.

1.4.3 Environmental protection

The work shall comply with the requirements of Section 01130 ENVIRONMENTAL PROTECTION.

1.5 BURNING

The use of burning at the project site for the disposal of refuse and debris will not be permitted in the right-of-way area or off-site.

1.6 USE OF EXPLOSIVES

Use of explosives will not be permitted.

PART 2 PRODUCTS (Not Applicable)

PART 3 EXECUTION

3.1 EXISTING OUTLET SLUICE GATE CONTROL TOWER

The existing concrete outlet sluice gate control tower shall be removed and disposed by the Contractor.

3.2 EXISTING SLUICE GATE AND GATE LIFT ASSEMBLY

Existing sluice gate and gate lift assembly, as indicated on contract drawing, shall be removed by the Contractor. The existing assembly shall become the property of the Contractor for disposal. All parts of the sluice gate and gate lift assembly, except items cast in existing concrete, shall be removed by the Contractor from the structure prior to pressure grouting process.

3.3 UTILITIES

When utility lines are encountered that are not indicated on the drawings, the Contracting Officer shall be notified prior to further work in that area.

3.4 BACKFILL REQUIREMENTS

Areas in which removal/demolition occurs will be backfilled with impervious material compacted to levee fill compaction requirements and match existing grade. A minimum of 3 feet of impervious fill shall be placed over the ends of the grouted pipe.

3.5 DISPOSITION OF MATERIAL

Title to material and equipment to be demolished is vested in the Contractor upon receipt of notice to

proceed. The Government will not be responsible for the condition, loss or damage to such property after notice to proceed.

3.5.1 Material Salvaged for the Contractor

Material salvaged for the Contractor shall be promptly removed from the site. Material salvaged for the Contractor shall not be sold on the site.

3.5.2 Unsalvageable Material

Concrete, masonry, and other noncombustible material shall be disposed of by the Contractor in a disposal area located offsite approved for such disposal and material. The location and approval of a disposal area shall be the responsibility of the Contractor. Burning will not be permitted on site. Combustible material shall be disposed off site at a site approved for such disposal.

3.6 CLEAN UP

Debris shall be removed and transported by the Contractor in a manner that prevents spillage on streets or adjacent areas. Local regulations regarding hauling and disposal shall apply.

** End of Section **

DIVISION 2 – SITE WORK

SECTION 02110

CLEARING, GRUBBING AND REMOVAL

TABLE OF CONTENTS

PART 1 GENERAL
1.1 SCOPE
1.2 QUALITY CONTROL

PART 2 PRODUCTS (Not Applicable)

PART 3 EXECUTION
3.1 CLEARING
3.2 GRUBBING
3.3 DISPOSAL OF DEBRIS
3.3.1 General
3.3.2 Removal from Site

SECTION 02110

CLEARING, GRUBBING AND REMOVAL

PART 1 GENERAL

1.1 SCOPE

The work covered by this section consists of furnishing all plant, labor, equipment, and materials, and performing all operations necessary for the clearing, grubbing, and removal of the debris from the areas specified herein; for the disposal of debris from clearing and grubbing; and for the filling of grubbing holes, all as specified herein and/or indicated on the drawings.

1.2 QUALITY CONTROL

The Contractor shall establish and maintain quality control for the work specified in this section to assure compliance with contract requirements and maintain records of his quality control for all construction operations including but not limited to the following:

(1) Clearing

Location and limits.

(2) Grubbing

Location, limits, depths, refill of holes and compaction.

(3) Removal

Method and location of disposition.

(4) Disposition of Debris

Method and location of removal from site, damage to timber or improvements which are not to be cleared.

A copy of these records and tests, as well as the records of corrective action taken, shall be furnished to the Government.

PART 2 PRODUCTS (Not Applicable)

PART 3 EXECUTION

3.1 CLEARING

Clearing shall consist of the complete removal above the ground surface and/or excavated surface of all trees, stumps, down timber, fencing, snags, brush, vegetation, and other debris. Areas to be cleared include all specific areas where any work is required, and all other areas within the right-of-way limits which are necessary for construction operations and operation of the Contractor's equipment. Regrowth of vegetation or trees before applicable construction shall be cleared prior to the construction operations at no additional cost to the Government.

3.2 GRUBBING

Grubbing shall consist of the removal of all stumps, tap roots, buried logs, and other projections, which have a cross section more than 1½-inches in diameter. Foundations for structures and embankments including cofferdam embankment shall be grubbed to a depth of at least 2-feet below the applicable existing or excavated surfaces. The areas to be grubbed are those areas within the work limits from which trees, stumps, down timber, fencing, snags, and other projections have been removed as specified in 3.1 above. All objectionable matter shall be removed from excavated materials which will subsequently be used in the embankments or backfills. All holes caused by grubbing, except within the limits of future excavations, shall be filled with suitable material as approved by the Contracting Officer in 1-foot layers to the elevation of the adjacent ground surface or excavated surface, as applicable, and each layer compacted to a density of at least 95 percent of the laboratory density obtained by the Standard Proctor test (ASTM D 698).

3.3 DISPOSAL OF DEBRIS

3.3.1 General

All debris resulting from clearing and grubbing operations on this contract shall be disposed of at a site approved for such disposal.

3.3.2 Removal from Site

The Contractor shall remove all non-organic debris resulting from clearing and grubbing operations, stoves, hot water heaters, old tires and other such debris from the site of the work. Such disposal shall comply with all applicable Federal, State and local laws. The Contractor may, at his option retain for his own use or disposal by sale or otherwise any such materials of value. The Government assumes no responsibility for the protection or safekeeping of any materials retained by the Contractor. Such materials shall not be stored on site and shall be promptly removed from the site of work. The locations and manner of placement of clearing and grubbing debris on the right-of-way by the Contractor for his convenience prior to removal of the debris from the site of the work shall be subject to the approval of the Contracting Officer. If the Contractor elects to dispose of debris from clearing operations at a location other than an approved disposal site, then he shall obtain written permission from the owner of the site and provide a copy to the Contracting Officer proir to any disposal.

Such material shall be so placed as not to interfere with roads, drainage or other improvements and in such a manner as to eliminate the possibility of its entering into channels, ditches, or

streams. The Contractor shall furnish written evidence to the Contracting Officer that he has obtained from the property owner, permission for disposal of material on the owner's property. The written evidence shall consist of an authenticated copy of the conveyance under which the Contractor acquired the property rights and access thereto, prepared and executed in accordance with the laws of the State of Missouri. If temporary rights are obtained by the Contractor, then the period of time shall coincide with Section 00800, paragraph 1.1 hereof, plus a reasonable time for any extension granted for completion of the work.

** End of Section **

DIVISION 2 – SITE WORK

SECTION 02215

GEOTEXTILE

TABLE OF CONTENTS

PART 1 GENERAL
- 1.1 SCOPE
- 1.2 QUALITY CONTROL
- 1.3 APPLICABLE PUBLICATION

PART 2 PRODUCTS
- 2.1 GEOTEXTILE
  - 2.1.1 General
  - 2.1.2 Seams
  - 2.1.3 Acceptance Requirements
- 2.2 SHIPMENT AND STORAGE

PART 3 EXECUTION
- 3.1 BASE PREPARATION
- 3.2 SECURING PINS
- 3.3 INSTALLATION

SECTION 02215

GEOTEXTILE

PART 1 GENERAL

1.1 SCOPE

The work provided for herein consists of furnishing all plant, labor, material, and equipment and performing all operations required for furnishing, hauling, and placing the geotextile complete, as specified herein, and maintaining the geotextile until applicable cover is completed and accepted.

1.2 QUALITY CONTROL

The Contractor shall establish and maintain quality control for the work specified in this section to assure compliance with contract requirements and maintain records of his quality control for all construction operations including but not limited to the following:

(1) Material

Conforms to specifications.

(2) Placement

Location, foundation, limits, anchoring, laps, finished surfaces.

A copy of these records and tests, as well as the records of corrective action taken, shall be furnished to the Government.

1.3 APPLICABLE PUBLICATION

The following publication of the issues listed below, but referred to thereafter by basic designation only, forms a part of this specification to the extent indicated by the references thereto:

AMERICAN SOCIETY FOR TESTING AND MATERIALS (ASTM) PUBLICATIONS.

D 4439-92a	Terminology for Geosynthetics
D 4491-92	Water Permeability of Geotextiles by Permittivity

D 4533-91	Trapezoid Tearing Strength of Geotextiles
D 4632-91	Grab Breaking Load and Elongation of Geotextiles
D 4751-93	Apparent Opening Size of a Geotextile
D 4833-88	Index Puncture Resistance of Geotextiles, Geomembranes, and Related Products
D 4884-90	Seam Strength of Sewn Geotextiles
D 4886-88	Abrasion Resistance of Geotextiles (Sand Paper/Sliding Block Method)

PART 2 PRODUCTS

2.1 GEOTEXTILE

2.1.1 General

The geotextile shall be a non-woven pervious sheet of plastic yarn as defined by ASTM D 4439. The geotextile shall meet the physical requirements listed in Table No. 1, inserted at the end of this section. The geotextile shall provide an Equivalent Opening Size (EOS) no finer than the U.S. Standard Sieve No. 100 and no coarser than the U.S. Standard Sieve No. 50. The geotextile shall consist of a long-chain synthetic polymer composed of at least 85 percent by weight of ester, propylene, ethylene, amide or vinylidene-chloride, and shall contain stabilizers and/or inhibitors added to the base plastic if necessary to make the filaments resistant to deterioration due to ultra-violet and heat exposure. The edges of the geotextile shall be finished to prevent the outer yarn from pulling away from the geotextile .

2.1.2 Seams

The seams of the geotextile shall be sewn with thread of a material meeting the chemical requirements given above for geotextile yarn or shall be bonded by cementing or by heat. The sheets of geotextile shall be attached at the factory or another approved location, if necessary, to form sections using the manufacturer's standard width or a width of 12-feet, whichever is greater. Seams shall be tested in accordance with method ASTM D 4884, using 1-inch square jaws and 12-inches per minute constant rate of traverse. The strengths shall be not less than 90 percent of the required tensile strength (Table No. 1) of the unaged geotextile in any principal direction. "Table No. 1 - Physical Requirements" is at the end of this section.

2.1.3 Acceptance Requirements

All brands of geotextile and all seams to be used will be accepted on the following basis. The Contractor shall furnish the Contracting Officer, in duplicate, a mill certificate or affidavit signed by a legally authorized official from the company manufacturing the geotextile . The mill certificate or affidavit shall attest that the geotextile meets the chemical, physical and manufacturing requirements stated in this specification. If requested by the Contracting Officer, the Contractor shall provide to the Government geotextile samples for testing to determine compliance with any or all of the requirements in this specification. When samples are to be provided, they shall be submitted a minimum of 60 days prior to the beginning of installation of the same geotextile . All samples provided shall be from the same production lot as will be supplied for the contract, and shall be the full manufactured width of the geotextile by at least 10-feet long, except that samples for seam strength may be a full width sample folded over and the edges stitched for a length of at least 5-feet. Samples submitted for testing shall be identified by manufacturer's lot designation.

2.2 SHIPMENT AND STORAGE

During all periods of shipment and storage, the geotextile shall be protected from direct sunlight, ultra-violet rays, temperatures greater than 140 degrees F, mud, dirt, dust and debris. To the extent possible, the geotextile shall be maintained wrapped in a heavy-duty protective covering.

PART 3 EXECUTION

3.1 BASE PREPARATION

Areas on which geotextile is to be placed shall be dressed to remove humps and depressions within the slope lines and to provide relatively smooth and uniform surfaces to conform to the cross sections shown on the drawings and as described henceforth in this paragraph. Immediately prior to placing the geotextile , the prepared base will be inspected by the Contracting Officer and no geotextile shall be placed until those areas have been approved.

3.2 SECURING PINS

Securing pins, if used, shall be ¼-inch in diameter, steel, pointed at one end and fabricated with a head to retain a steel washer having an outside diameter of no less than 1½-inches. The length of the pins shall be no less than 18-inches. Securing pins are to be used for temporarily holding the geotextile in place and must be pulled prior to placement of the riprap.

3.3 INSTALLATION

The geotextile shall be placed in the locations shown on the drawings. At the time of installation, geotextile will be rejected if it has defects, rips, holes, flaws, deterioration or damage incurred during manufacture, transportation or storage. The geotextile shall be laid

smooth and free of tension, folds, wrinkles or creases. The strips shall be placed to provide a minimum width of 12-inches of overlap for each joint. The geotextile shall be secured as specified in 3.2 above and any additional securing regardless of location shall be made as necessary to prevent any slippage of the geotextile. The geotextile shall be protected at all times during construction from contamination by surface runoff and any geotextile so contaminated shall be removed and replaced with uncontaminated geotextile . The geotextile shall be installed from the downstream end to the upstream end, and from the channel bottom up to top bank. Any geotextile damaged during its installation or during placement of the specified material upon or against the geotextile shall be replaced by the Contractor at no cost to the Government. Placement of the geotextile shall not be greater than can be covered the same day. Any geotextile that is not covered daily and becomes contaminated or damaged shall be replaced at no additional cost to the Government. The geotextile shall be protected from damage due to the placement of material thereon by limiting the height of drop of the material. At no time will the riprap be dropped or placed from a height greater than 12-inches from the surface of the geotextile. Before placement of material thereon, the Contractor shall demonstrate that the placement technique will prevent damage to the geotextile . Also, after installation of geotextile, no construction equipment of any type will be allowed on the geotextile surface before or after stone placement.

** End of Section **

Table No. 1 Physical Requirements

Physical Property		Test Procedure		Applicable Values++
Geotextile Permeability		ASTM D 4491 Test Methods for Water Permeability of Geotextiles by Permittivity		The permeability of the geotextile shall be greater than 0.49 feet per minute
Tear Strength		ASTM D 4533 Trapezoidal Tear Strength		30 pounds minimum in any principal direction
Tensile Strength + (unaged geotextile)		ASTM D 4632 Determine Breaking Load such as specified in the ASTM		200 pounds minimum in any principal direction
Breaking Elongation + (unaged geotextile)		ASTM D 4632 Determine Apparent Elongation Breaking		15 percent minimum in any principal direction
Equivalent Opening Size (EOS)		ASTM D 4751 Determine Apparent Opening Size – AOS (EOS)		No finer than the U.S. Standard Sieve No. 100 and no coarser than the U.S. Standard Sieve No. 50
Puncture Strength + (unaged geotextile)		ASTM D 4833 Determine Puncture Resistance as specified in the ASTM		100 pounds minimum
Abrasion Resistance		ASTM D 4886 Determine Breaking Load after Abrasion Test as specified in ASTM		55 pounds minimum residual breaking load in any principal direction

+ Unaged geotextile is defined as geotextile in the condition received from the manufacturer or distributor.

++ All numerical values represent minimum average roll values (i.e., any roll in a lot should meet or exceed the minimum in the table).

DIVISION 2 — SITE WORK

SECTION 02219

EXCAVATION

TABLE OF CONTENTS

PART 1 GENERAL
1.1 SCOPE
1.2 QUALITY CONTROL
1.3 GENERAL
1.3.1 Excavation
1.3.2 Embedment of Stone Protection

PART 2 PRODUCTS (Not Applicable)

PART 3 EXECUTION
3.1 DISPOSITION OF MATERIALS
3.1.1 Suitable Materials
3.1.2 Unsuitable Materials
3.1.3 Temporary Ramps
3.2 SLIDES
3.3 SEDIMENTS

SECTION 02219

EXCAVATION

PART 1 GENERAL

1.1 SCOPE

The work covered by this section consists of furnishing all plant, labor, equipment, and materials, and performing all operations necessary to excavate the structure foundation, miscellaneous excavation; excavation for ditches; and removal of unsuitable materials; all as indicated on the drawings and/or specified herein. Excavation incidental to the installation of the dewatering system is covered in SECTION 02707 – CONTROL OF WATER.

1.2 QUALITY CONTROL

The Contractor shall establish and maintain quality control for the work specified in this section to assure compliance with contract requirements and maintain records of his quality control for all construction operations including but not limited to the following:

(1) Excavation. Layout, bottom widths, side slopes, transitions, disposition of materials.

(2) Slides. Location, limits, method and equipment used where remedial work has been directed.

(3) Removal of Sediments. Location, limits, removal, disposition of materials.

A copy of these records and tests, as well as the records of corrective action taken shall be furnished to the Government.

1.3 GENERAL

1.3.1 Excavation

The Contractor shall excavate and remove all material of whatever nature encountered as may be necessary to excavate the structure excavation area; including excavation necessary to place the stone protection as indicated; and to excavate the outlet channel excavation areas; all to the lines and grades indicated therefor on the drawings. The Contractor shall also perform excavation as necessary to remove unsuitable material below the excavation lines and grades to the elevations directed by the Contracting Officer. Excavation may be performed with any type of equipment suitable for the work. The methods employed shall be such that will not induce slides or dislodgment of foundation material, and that do not endanger the safety of

personnel. The volume of material removed below the indicated bottom grade for excavation, if directed by the Contracting Officer, will be paid in accordance with the CONTRACT CLAUSE entitled “Changes". Any excavation below the grades shown on the drawings for excavation or below the grades directed by the Contracting Officer, shall be refilled with compacted backfill material or concrete as approved by the Contracting Officer and as specified in SECTION 02220 - LEVEE EMBANKMENTS, BACKFILLS, AND WALL DRAINS and DIVISION 3 - CONCRETE at the expense of the Contractor and no payment will be made therefore. Areas resulting from directed excavation below excavation lines and grades shall be refilled with compacted backfill material as specified in SECTION 02220 - LEVEE EMBANKMENTS, BACKFILLS, AND WALL DRAINS and such refill will be paid in accordance with the CONTRACT CLAUSE entitled “Changes". A tolerance of 2-inches above or below the theoretical cross section will be allowed in the excavation outside the actual foundations for the outlet structure and 36-inch culvert pipe. Finished lines of adjacent excavations shall conform to the top elevation of riprap at and in the vicinity of the junction of such surfaces.

1.3.2 Embedment of Stone Protection

The Contractor shall excavate, in areas where riprap is required, in such a manner that the geotextile (filter fabric) and riprap are placed beneath the theoretical cross section as indicated on the drawings. Tolerances for such excavation shall be subject to the tolerances for geotextile (filter fabric) and riprap as specified in SECTION 02544 paragraph 3.3. The finished grade of the adjacent channel excavation shall conform to the finished riprap grade at and in the vicinity of the junctions of these surfaces.

PART 2 PRODUCTS (Not Applicable)

PART 3 EXECUTION

3.1 DISPOSITION OF MATERIALS

3.1.1 Suitable Materials

Excavated materials which are suitable for incorporation in the embankment shall be utilized for constructing the prescribed backfills and embankment. Suitable material shall consist of material as specified in section 02220 - LEVEE EMBANKMENTS, BACKFILLS, AND WALL DRAINS. Such materials from the excavations may be placed directly in the permanent work when such procedure is practicable. Where direct placement is not practicable, suitable material from the excavation may be stockpiled for subsequent use in parts of the work for which it is suitable. The method and location of stockpiling material must meet the approval of the Contracting Officer. Suitable materials in excess of the quantity necessary to construct the various backfills and embankments shall be disposed of as specified for unsuitable materials in paragraph 3.1.2 below.

3.1.2 Unsuitable Materials

Material from the excavations prescribed in this section which are not suitable for incorporation in the backfills and embankments shall be disposed of in the Old Outlet Ditch as shown on the Drawings.

3.1.3 Temporary Ramps

The Contractor will be permitted to construct ramps over the levee, at his expense, for transportation of material. Such ramps and the location thereof shall be subject to approval of the Contracting Officer. When the ramps are no longer needed they shall be removed and the material therefrom shall be disposed of as specified in paragraph 3.1.1 and 3.1.2. Areas formerly occupied by the ramps shall be fertilized and turfed at the Contractor's expense and as specified in SECTION 02938 - ESTABLISHMENT OF TURF.

3.2 SLIDES

In case sliding occurs in any part of the excavations prescribed in this section after they have been excavated, but prior to final acceptance of all work under the contract, the Contractor shall repair the slide as directed by the Contracting Officer. In case the slide is caused through the fault of the Contractor, it shall be repaired at no cost to the Government. In case the slide is due to no fault of the Contractor, an equitable adjustment in the contract price will be made for the repairs in accordance with the provisions of the CONTRACT CLAUSE entitled "Changes."

3.3 SEDIMENTS

Prior to final acceptance of all work under the contract, the Contracting Officer may require removal of sediments from ditches as necessary to restore them to grade and section. No additional payment will be made for such removal, and any costs associated therewith will be considered incidental to the pay item "Environmental Protection".

** End of Section **

DIVISION 2 - SITE WORK

SECTION 02220

LEVEE EMBANKMENTS, BACKFILLS, AND WALL DRAINS

TABLE OF CONTENTS

PART 1 GENERAL
- 1.1 SCOPE
- 1.2 QUALITY CONTROL
- 1.3 APPLICABLE PUBLICATION
- 1.4 EQUIPMENT
  - 1.4.1 General
  - 1.4.2 Pervious Backfill
  - 1.4.3 Impervious Backfill
  - 1.4.4 Levee Embankment
    - 1.4.4.1 General
    - 1.4.4.2 Tamping Rollers
      - 1.4.4.2.1 Tractor-Drawn
      - 1.4.4.2.2 Self-Propelled
    - 1.4.4.3 Rubber-Tired Rollers
    - 1.4.4.4 Crawler-Type Tractors
    - 1.4.4.5 Alternative Compaction Equipment
    - 1.4.4.6 Miscellaneous Equipment
    - 1.4.4.7 Sprinkling Equipment

PART 2 PRODUCTS
- 2.1 MATERIALS
  - 2.1.1 Pervious Backfill
  - 2.1.2 Impervious Backfill
  - 2.1.3 Levee Embankment
  - 2.1.4 Unsuitable Materials
  - 2.1.5 Frozen Materials
- 2.2 WALL DRAIN
  - 2.2.1 PVC Pipe
  - 2.2.2 Filter Fabric
  - 2.2.3 Gravel
  - 2.2.4 4-inch Recessed Flap Gate at Wall Drain
  - 2.2.5 Outlet Screen
  - 2.2.6 Cleanout

PART 3 EXECUTION
- 3.1 BACKFILLS
  - 3.1.1 General

3.2 PLACEMENT
3.2.1 General
3.2.1.1 Levee Embankment
3.2.2 Pervious Backfill
3.2.3 Impervious Backfill
3.2.4 Compacted Fill
3.3 COMPACTION
3.3.1 Pervious Backfill
3.3.2 Impervious Backfill
3.3.3 Compacted Fill
3.3.4 Embankment Against Structures
3.4 SLIDES

SECTION 02220

LEVEE EMBANKMENTS, BACKFILLS, AND WALL DRAINS

PART 1 GENERAL

1.1 SCOPE

The work covered by this section consists of furnishing all plant, labor, materials, and equipment and performing all operations necessary for stripping of topsoil, foundation excavation, foundation preparation, construction of backfill around foundations, disposal of excess material and other incidental earthwork as may be necessary to complete the project as shown on the contract drawings or specified herein.

1.2 QUALITY CONTROL

The Contractor shall establish and maintain quality control for the work specified in this section to assure compliance with contract requirements and maintain records of his quality control for all construction operations including but not limited to the following:

(1) Equipment

Type, size, suitability.

(2) Backfill and Embankment

Layout, limits, type, materials, slopes, compaction, cross section, tolerances.

A copy of these records and tests, as well as the records of corrective action taken, shall be furnished the Government.

1.3 APPLICABLE PUBLICATION

The following publications of the issues listed below, but referred to thereafter by basic designation only, form a part of this specification to the extent indicated by the references thereto:

AMERICAN SOCIETY FOR TESTING AND MATERIALS (ASTM) PUBLICATIONS

A 36/A36M-94	Carbon Structural Steel
C 33-93	Concrete Aggregates

D 698-91	Laboratory Compaction Characteristics of Soil Using Standard Effort (12,400 ft-lbf/ft3)
D 1556-90	Density and Unit Weight of Soil in Place by the Sand-Cone Method
D 1785-94	Poly (Vinyl Chloride) (PVC) Plastic Pipe, Schedules 40, 80, 120.
D 2216-92	Water (Moisture) Content of Soil and Rock
D 2922-91	Density of Soil and Soil-Aggregate in Place by Nuclear Methods (Shallow Depth)
D 3017-88 (1993)	Water Content of Soil and Rock in Place by Nuclear Methods (Shallow Depth)

1.4 EQUIPMENT

1.4.1 General

Equipment shall be of types suitable for construction of the prescribed embankments and backfills.

1.4.2 Pervious Backfill

Equipment used for placing and compacting pervious backfill shall be of types suitable for such construction.

1.4.3 Impervious Backfill

Equipment used for placing and compacting impervious backfill shall be of types suitable for such construction.

1.4.4 Levee Embankment

1.4.4.1 General

Equipment used for placing and compacting levee embankment shall conform to the requirements of paragraphs 1.4.4.2. through 1.4.4.7

1.4.4.2 Tamping Rollers

1.4.4.2.1 Tractor-Drawn

Tractor-drawn tamping rollers shall consist of one or more units. Each unit shall consist of a cylindrical drum not less than 5-feet in length and not less than 5-feet in diameter. Each drum shall have staggered feet uniformly spaced over the cylindrical surface so as to provide approximately 3 tamping feet for each 2 square feet of drum surface. The tamping feet shall be 7-inches to 11-inches in clear projection from the cylindrical surface of the roller, and shall have a face area of not less than 5 nor more than 10 square inches. The drums shall be water or sand and water ballasted. The weight of the roller when fully loaded shall not be less than 3500-pounds per foot of drum length and when empty shall be not more than 2000-pounds per foot of drum length. The Contractor shall vary the amount of ballast in the drums to obtain optimum compactive effort for the material being compacted. The roller shall be equipped with cleaning devices, so designed and attached as to prevent the accumulation of material between the tamping feet. These cleaning devices shall be maintained at their full length and correct alignment throughout the periods of use of the roller. The rolling units of multiple-type tamping rollers shall be pivoted on the main frame in a manner which will permit the units to adapt themselves to uneven ground surfaces and to rotate independently. The roller shall be pulled by a tractor at a speed not to exceed 3.5 miles per hour.

1.4.4.2.2 Self-Propelled

At the option of the Contractor, self-propelled tamping rollers may be used in lieu of tractor-drawn tamping rollers provided these rollers conform to the towed roller requirements for the length and spacing of tamping feet, the empty weight per meter of drum, and cleaning devices. However, self-propelled rollers exceeding the empty weight requirement may be used, provided that by substitution of tamping feet having a face area not exceeding 14 square inches, the nominal foot pressure on the tamping feet of the self-propelled roller can be adjusted to approximate the foot pressure of the towed roller for the particular working conditions. Self-propelled rollers conforming to the above requirements but with tamping feet exceeding the 14-square inches maximum face area may be approved for use provided the Contractor demonstrates to the satisfaction of the Contracting Officer by field tests that the roller can properly compact the fill without creating planes of weakness or laminations. For self-propelled rollers in which steering is accomplished through the use of rubber-tired wheels, the tire pressures shall not exceed 5700-pounds per square foot. The roller shall be operated at a speed of not more than 3.5-miles per hour.

1.4.4.3 Rubber-Tired Rollers

Rubber-tired rollers shall have a minimum of four wheels equipped with pneumatic tires. The tires shall be of such size and ply as to be capable of being operated at tire pressures between 11,500 and 14,400-pounds per square foot at a 120,000 pound wheel load. The roller wheels shall be located abreast and so designed that each wheel will carry approximately equal load in traversing uneven ground. The spacing of the wheels shall be such that the distance between the nearest edges of adjacent tires is not greater than 50 percent of the rated tire width of a single tire. The roller shall have a rigid steel frame provided with a body suitable for ballast loading so that the load per wheel may be varied, as directed by the Contracting Officer, from 90,000 to 120,000 pounds. The roller shall be towed at speeds not to exceed 2 miles per hour.

1.4.4.4 Crawler-Type Tractors

Crawler-type tractors used for spreading or compaction shall weigh not less than 20,000 pounds, shall exert a unit tread pressure of not less than six pounds per square inch, and shall be operated at speeds not to exceed 3.5 miles per hour.

1.4.4.5 Alternative Compaction Equipment

The Contractor may propose for use alternative types of compaction equipment not included in these specifications. The suitability of the alternative equipment must be demonstrated to the Contracting Officer by a field test conducted by and at the expense of the Contractor. The alternative compaction equipment must be capable of properly compacting the soil so that no planes of weakness or laminations are formed in the fill. The field test shall consist of compacting a minimum of three layers of an area of embankment with the alternative type equipment. Testing and inspection of the area shall then be performed by the Contractor at no additional cost to the Government. Procedures for constructing and testing the area will be provided by the Contracting Officer. Each proposed alternative type of equipment must be capable of compacting a layer of soil at least 12 inches thick. A minimum of four complete passes over each layer of the test fill will be required for each type of alternative equipment that is allowed for use, unless in the course of constructing the test fill the Contractor is able to demonstrate that proper compaction can be obtained with fewer passes. Alternative type equipment shall be operated at speeds not to exceed 3.5 miles per hour. If sufficient previous testing has been performed on the alternative compaction equipment proposed by the Contractor to verify the suitability of the equipment to the Contracting Officer's satisfaction, the Contracting Officer may determine that the above-specified field test is not required.

1.4.4.6 Miscellaneous Equipment

Scarifiers, disks, spring-tooth or spike-tooth harrows, spreaders, power tampers, and other equipment shall be types suitable for construction of the prescribed embankment.

1.4.4.7 Sprinkling Equipment

Sprinkling equipment shall be designed to apply water uniformly and in controlled quantities to variable widths of surface.

PART 2 PRODUCTS

2.1 MATERIALS

2.1.1 Pervious Backfill

Pervious backfill material shall consist of a clean concrete sand conforming to ASTM C 33. The gradation of all pervious backfill material shall be as follows:

Sieve	Percent Passing
⅜ inch	100

No. 4	95 to 100
No. 8	80 to 100
No. 16	50 to 85
No. 30	25 to 60
No. 50	10 to 30
No. 100	2 to 10

2.1.2 Impervious Backfill

Impervious backfill shall be earthen material obtained from the required excavations and shall be material classifying as CH or CL clays by the Unified Soil Classification System with a minimum liquid limit of 40 % and a minimum plasticity index of 20.

2.1.3 Levee Embankment

Material for the levee (compacted fill) shall be material obtained from the required excavations that the Contracting Officer determines as suitable.

2.1.4 Unsuitable Materials

Materials which are classified as unsuitable for embankment material are defined as masses of organic matter, sticks, branches, roots, and other debris. The Contractor shall, when directed, remove any and all material which the Contracting Officer considers unsuitable or objectionable.

2.1.5 Frozen Materials

Under no circumstances shall frozen earth, snow, or ice be placed in an embankment. The Contracting Officer may require the wasting of frozen material in order that construction may proceed, and such material wasted by written order of the Contracting Officer will be paid for by an equitable adjustment under the CONTRACT CLAUSE entitled "Changes."

2.2 WALL DRAIN

2.2.1 PVC Pipe

PVC pipe, 4-inches in diameter, perforated and unperforated, shall be placed at the location indicated on the drawings. Pipe shall conform to the requirements of ASTM D 1785, Schedule 40. The joints shall be made as recommended by the manufacturer.

2.2.2 Filter Fabric

Filter fabric conforming to the requirements of SECTION 02215 GEOTEXTILE shall be placed as shown on the drawings.

2.2.3 Gravel

The gravel material shall consist of a washed, natural gravel conforming to the following gradation:

Sieve	Percent Passing
3-inches	100
1½-inches	85 – 100
¾-inch	35 – 70
⅜-inch	5 – 40
No. 4	0 – 10

The material shall be furnished by the Contractor from off-site sources. The Contractor shall furnish a certificate from an approved independent testing laboratory stating that the material delivered to the job site is in compliance with the specifications.

2.2.4 4-Inch Recessed Flap Gate at Wall Drain

The valve frame shall be of solid cast bronze with a machined seating surface. The frame shall be of the flanged type with holes for mounting to an ANSI 125# standard flange or on the flat surface of a wall (optionally, the valve shall mount to a cast iron wall sleeve which incorporates a cast iron strainer and integral water stop). The valve cover (flap) shall also be of solid cast bronze incorporating a neoprene rubber seating surface mounted in a dovetail type groove. Hinge arms shall be cast integrally with the cover and be attached to the frame utilizing a stainless steel spring pin.

2.2.5 Outlet Screen

The outlet screen shall be manufactured from 2½ -inch X 3/8-inch bar steel conforming to ASTM A 36; the woven wire screen shall be 1-inch X 1-inch X #6 gage, all welded construction; and the entire outlet screen shall be hot-dipped galvanized after fabrication. The steel mounting bolts shall be ½-inch X 6-inch stainless steel bolts. The Contractor shall submit shop drawings, showing dimensions, materials used, fabrication, and mounting details.

2.2.6 Cleanout

The cleanout shall be as shown on the drawings, and the 4-inch diameter PVC plug shall be threaded for attachment to the 4-inch PVC pipe.

PART 3 EXECUTION

3.1 BACKFILLS

3.1.1 General

All backfills shall be placed at the locations and to the lines, grades, and sections as indicated therefore on the drawings. A tolerance of 2½-inches above or below grade will be allowed in

the placement of the backfills and where structures are placed upon the backfills, unless otherwise directed by the Contracting Officer. No brush, tree roots, sod or other objectionable material shall be placed in the backfills. The Contractor shall, when directed, remove any materials which the Contracting Officer considers to be objectionable in the backfills. Frozen material shall not be placed in the backfills nor shall material be placed upon frozen foundations. The suitability of each section of the foundation for placing materials thereon will be determined by the Contracting Officer. No embankment or backfill shall be placed on or against concrete less than 14 days old, without prior approval of the Contracting Officer.

3.2 PLACEMENT

3.2.1 General

The location and extent of levee fill are as shown on the drawings. Embankment or backfill shall not be placed in water. Layers shall be full sections started at the slope stakes and carried substantially horizontal with sufficient crown or slope to provide satisfactory drainage during construction. The surface of any compacted layer shall be adequately scarified before the next layer is placed thereon.

3.2.1.1 Levee Embankment

The levee embankment shall be placed to the construction grades and constructed with the materials as shown on the drawings.

3.2.2 Pervious Backfill

Pervious backfill as shown on the drawings shall be placed in layers not exceeding 8-inches in thickness prior to compaction, except that where compaction by mechanical hand tamps is required the layers shall not exceed 6-inches in thickness prior to compaction. The materials may be spread by any approved equipment in horizontal layers and each layer shall be compacted as specified in 3.3.1. Self-propelled vibratory equipment, and crawler-type tractors as specified in paragraph 1.4.4.4 above may be used on sand backfill. Crawler-type tractors, vibratory equipment and other similar compaction equipment shall not be used within 2-feet of any completed or partially completed structure. Compaction within 2-feet of complete or partially complete structures shall be accomplished by the use of mechanical hand tamps or other approved methods and equipment. The Contractor shall perform field density tests of material placed to assure that proper compaction is being achieved. The Contractor shall perform at least two tests per every 350 cubic yards placed or two tests per shift if less than 350 cubic yards placed. The Contracting Officer can request field density tests at any time that compaction appears inadequate.

3.2.3 Impervious Backfill

Impervious backfill shall be placed and compacted as specified in paragraph 3.3.2. Impervious backfill at the structure shall be placed or spread in layers, the first layer not exceeding 6-inches in thickness prior to compaction and succeeding layers not exceeding 10-inches in thickness prior to compaction, and shall be compacted as specified in 3.3.2. Layers shall be

full sections started at the slope stakes and carried substantially horizontal with sufficient crown or slope to provide satisfactory drainage during construction. Partially completed fill shall be kept thoroughly drained. Frozen material shall not be placed in the fill nor shall fill be placed upon frozen ground.

3.2.4 Compacted Fill

The compacted fill within the levee embankment shall be placed and compacted as specified below. Compacted fill at any structure shall be placed or spread in layers, the first layer not exceeding 6 inches in thickness prior to compaction and succeeding layers not exceeding 8 inches in thickness prior to compaction, and shall be compacted as specified in 3.3.3. Layers shall be full sections started at the slope stakes and carried substantially horizontal with sufficient crown or slope to provide satisfactory drainage during construction. Partially completed fill shall be kept thoroughly drained. Frozen material shall not be placed in the fill nor shall fill be placed upon frozen ground. Immediately prior to placement of the fill material, the entire earth surface on or against which fill is to be placed shall be thoroughly broken to a depth of 6-inches. When the surface of any compacted layer is too smooth to bond properly with the succeeding layer, it shall be adequately scarified before the next layer is placed thereon. There shall be no placing in water.

3.3 COMPACTION

3.3.1 Pervious Backfill

Each layer of pervious backfill shall be compacted to a density of at least 95 percent of the laboratory density obtained by the Standard Proctor test (ASTM D 698). The field density determination shall be by the Sand-Cone Method (ASTM D 1556) or the Nuclear Method (ASTM D 2922, Method B). Moisture control of the compacted sand backfill will not be required. To assure that proper compaction is being achieved, the Contractor shall perform a minimum of two field density tests per 350 cubic yards of material placed or two tests per shift if less than 350 cubic yards are placed. Each layer shall be compacted by the use of self-propelled vibratory equipment and crawler-type tractors as specified in paragraph 1.4 above.

3.3.2 Impervious Backfill

Each layer of compacted impervious backfill shall be compacted to a density of at least 95 percent of the laboratory density obtained by the standard density test (ASTM D 698). The field density determination shall be by the Sand-Cone Method (ASTM D 1556) or the Nuclear Method (ASTM D 2922, Method B). The moisture content after compaction shall be within the limits of 2 percentage points above optimum and 3 percentage points below optimum moisture content as determined by the Contractor in accordance with ASTM D 698. The field moisture content after compaction shall be performed in accordance with ASTM D 2216 or ASTM D 3017. The materials may require moistening or aerating as necessary to provide the above specified moisture content. The Contractor shall perform standard laboratory density tests as specified in ASTM D 698 for each type of material used in the fill to determine optimum water content and maximum densities and shall perform field density and water content tests. The Contractor shall perform field density and water tests on each layer of material placed to assure

that proper compaction is being achieved. The locations where the Contractor is to take the field density and water content tests shall be as specified by the Contracting Officer.

3.3.3 Compacted Fill

Each layer of compacted fill shall be compacted to a density of at least 95 percent of the laboratory density obtained by the standard density test (ASTM D 698). The field density determination shall be by the Nuclear Method (ASTM D 2922, Method B). The moisture content after compaction shall be within the limits of 2 percentage points above optimum and 3 percentage points below optimum moisture content as determined by the Contractor in accordance with ASTM D 698. The field moisture content after compaction shall be performed in accordance with ASTM D 2216 or ASTM D 3017. The materials may require moistening or aerating as necessary to provide the above specified moisture content. The contractor shall perform standard laboratory density tests as specified in ASTM D 698 for each type of material used in the fill to determine optimum water content and maximum densities and shall perform field density and water content tests. The Contractor shall perform field density and water tests on each layer of material placed to assure that proper compaction is being achieved. The locations where the Contractor is to take the field density and water content tests shall be as specified by the Contracting Officer.

3.3.4 Embankment Against Structures

All fill placed within 2 feet of completed or partially completed structures shall be placed in layers not exceeding 6-inches in thickness prior to compaction and each layer shall be compacted by mechanical hand tampers or other approved methods and equipment to 95% Standard Proctor.

3.4 SLIDES

In the event of sliding of any part of the earthen fills during their construction, or after their completion, but prior to acceptance of all work under the contract, the Contractor shall, upon written order of the Contracting Officer, repair the slide as directed. In case the slide is caused through fault of the Contractor, the repairs shall be performed without cost to the Government. In case the slide is due to no fault of the Contractor, an equitable adjustment in the contract price will be made for its repair in accordance with the CONTRACT CLAUSE entitled "Changes."

** End of Section **

DIVISION 2 — SITE WORK

SECTION 02350

STEEL SHEET PILING

TABLE OF CONTENTS

PART 1 GENERAL
- 1.1 SCOPE
- 1.2 QUALITY CONTROL
- 1.3 APPLICABLE PUBLICATIONS
- 1.4 SUBMITTALS
  - 1.4.1 Equipment Descriptions
  - 1.4.2 Certificate

PART 2 PRODUCTS
- 2.1 MATERIALS

PART 3 EXECUTION
- 3.1 INSTALLATION
  - 3.1.1 Placing and Driving
    - 3.1.1.1 Placing
    - 3.1.1.2 Driving
- 3.2 MISCELLANEOUS
  - 3.2.1 Treatment of Pile Tops

SECTION 02350

STEEL SHEET PILING

PART 1 GENERAL

1.1 SCOPE

The work covered by this section consists of furnishing all plant, equipment, labor and materials, and performing all operations in connection with the installation of the permanent steel sheet piling in the outlet structure in accordance with these specifications and applicable drawings.

1.2 QUALITY CONTROL

The Contractor shall establish and maintain quality control for the work specified in this section to assure compliance with the contract requirements and maintain records of his quality control for all construction operations including but not limited to the following:

(1) Materials

Properties, type, quality, certificates.

(2) Driving

Placement, alignment, elevations, splicing, interlocks.

(3) Pile Tops

Elevations, cut-offs, treatment, splices of below grade tops.

A copy of these records and tests, as well as the records of corrective action taken, shall be furnished the Government daily.

1.3 APPLICABLE PUBLICATIONS

The following publications of the issues listed below, but referred to thereafter by basic designation only, form a part of this specification to the extent indicated by the references thereto.

AMERICAN SOCIETY FOR TESTING AND MATERIALS (ASTM) PUBLICATIONS

A 328/A 328M-88 Steel Sheet Piling

AMERICAN WELDING SOCIETY, INC. (AWS) CODE

D1.1-88 Structural Welding Code Steel

STEEL STRUCTURES PAINTING COUNCIL SPECIFICATIONS (SSPC)

SSPC Paint 16 Coal Tar Epoxy-Polyamide Black Paint

1.4 SUBMITTALS

1.4.1 Equipment Descriptions

The Contractor shall submit complete descriptions of pile driving equipment, including hammers, extractors, protecting caps and other appurtenances to the Contracting Officer for review prior to commencement of work.

1.4.2 Certificate

The Contractor shall furnish the Contracting Officer a certificate showing that piling furnished have a required ultimate interlock strength of 16 kips per inch (min) as determined by test results of two representative test specimens, approximately 3-inches long, per heat. The certificate shall indicate piling type, dimensions and section properties. Piling shall not be delivered to the site prior to the receipt by the Contractor of a written approval from the Contracting Officer.

PART 2 PRODUCTS

2.1 MATERIALS

Steel for sheet piling in the outlet structure shall conform to the requirements of ASTM A 328M. Sheet piling, including special fabricated sections, shall be of the type indicated on the drawings, have a nominal web thickness of not less than 3/8-inch and be of a design such that when in place they will be continuously interlocked throughout their entire length. Used sheet piling will not be acceptable. Piling shall have the minimum properties listed in the following table:

Type of Section	Section Modulus Per Foot (cu. inches)
PS 27.5 (Outlet Structure)	3.3

PART 3 EXECUTION

3.1 INSTALLATION

3.1.1 Placing and Driving

3.1.1.1 Placing

Piling shall be carefully located as shown on the drawings or as directed by the Contracting Officer. Piles shall be placed in a plumb position with each pile interlocked with adjoining piles for its entire length, so as to form a continuous diaphragm throughout the end width of the outlet apron all as shown on the drawings. Interlocks shall be properly engaged with the thumb of each pile gripped by the thumb and finger of the adjacent pile. All piles shall be placed as true to line as possible. Suitable temporary walls or guide structures shall be provided to insure that the piles are driven to correct alignment.

3.1.1.2 Driving

All piles shall be driven to at least the depths shown on the drawings and shall extend to the elevation indicated for the top of the piles. A tolerance of ¼-inch above the indicated top elevation will be permitted. Piles shall be driven by approved methods in such manner as not to subject the piles to serious damage and to insure proper interlocking throughout the length of the piles. Pile hammers shall be maintained in proper alignment during driving operations by use of suitable leads or by guides attached to the hammer. A protecting cap shall be employed in driving, when required, to prevent damage to the tops of piles. All piles shall be driven without the aid of a water jet, unless otherwise authorized. Adequate precautions shall be taken to insure that piles are driven plumb. If at any time the forward or leading edge of the piling wall is found to be out of plumb in the plane of the wall, the piles already assembled and partly driven shall be driven to full depth and the Contractor shall provide and drive tapered piles to interlock with the out of plumb leading edge or take other corrective measures to insure the plumbness of succeeding piles. The maximum permissible taper for any tapered pile will be 1/8 inch per foot of length. Each run of piling shall be driven to grade progressively from the start and no pile shall be driven to a lower grade than those behind it in the same run except when the piles behind it cannot be driven deeper. If the pile next to the one being driven tends to follow below final grade, it may be pinned to the next adjacent pile. Should obstructions render it impracticable to drive a pile to the specified penetration, the Contractor shall make such changes in design alignment of the pile structure as may be deemed necessary by the Contracting Officer to insure the adequacy and stability of the structure. Payment for the additional labor and materials necessitated by such changes will be made under the CONTRACT CLAUSE entitled " Changes." Piles driven out of interlock with adjacent piles or otherwise damaged shall be removed and replaced by new piles at the Contractor's expense. Piles shall not be driven within 100-feet of concrete less than 7 days old.

3.2 MISCELLANEOUS

3.2.1 Treatment of Pile Tops

The surface of the outlet structure piling wall embedded in concrete shall be coated using a coal tar epoxy paint conforming to the requirements of Steel Structures Painting Council Specification SSPC Paint 16. Styrofoam RM extruded board, shall be attached to the top of the piling which is embedded in concrete as indicated on the drawings. Handling holes in such

piling shall be plugged by welding with same thickness material. The tops of the piles shall be cut off to conform to the slope or grade indicated on the drawings.

** End of Section **

DIVISION 2 - SITE WORK

SECTION 02544

STONE PROTECTION

TABLE OF CONTENTS

PART 1 GENERAL
- 1.1 SCOPE
- 1.2 QUALITY CONTROL
- 1.3 APPLICABLE PUBLICATION

PART 2 PRODUCTS
- 2.1 STONE
  - 2.1.1 General
  - 2.1.2 Sources and Evaluation Testing
  - 2.1.3 Gradation
  - 2.1.4 Test Method
  - 2.1.5 Gradation Test

PART 3 EXECUTION
- 3.1 BASE PREPARATION
- 3.2 PLACEMENT OF FILTER FABRIC
- 3.3 RIPRAP
  - 3.3.1 General
  - 3.3.2 Placement

SECTION 02544

STONE PROTECTION

PART 1 GENERAL

1.1 SCOPE

The work provided for herein consists of furnishing all plant, labor, equipment and materials, and performing all operations in connection with the construction of the stone protection, including foundation preparation, placement of filter fabric, and placement of riprap, all in accordance with these specifications and the contract drawings.

1.2 QUALITY CONTROL

The Contractor shall establish and maintain quality control for the work specified in the section to assure compliance with contract requirements and maintain records of his quality control for all construction operations including but not limited to the following:

(1) Foundation

Preparation (line and grade).

(2) Inspection

At the work site to ensure use of specified materials.

(3) Filter Fabric

Placement.

(4) Riprap

Gradation and placement.

A copy of these records and tests, as well as the records of corrective action taken, shall be furnished the Government.

1.3 APPLICABLE PUBLICATION

The following publication of the issue listed below, but referred to thereafter by basic designation only, forms a part of this specification to the extent indicated by the reference thereto:

U.S. ARMY CORPS OF ENGINEERS, HANDBOOK FOR CONCRETE AND CEMENT (CRD).

CRD-C 106-93	Unit Weight and Voids in Aggregate
CRD-C 107-94	Specific Gravity and Absorption of Coarse Aggregate

PART 2 PRODUCTS

2.1 STONE

2.1.1 General

All stone shall be durable material as approved by the Contracting Officer. The sources from which the Contractor proposes to obtain the material shall be selected well in advance of the time when the material will be required. In case an undeveloped source is to be used, the Contractor will be required to show that an ample quantity of material is available prior to and in addition to required quality tests. Stone for riprap shall be of a suitable quality to ensure permanence in the structure and in the climate in which it is to be used. It shall be free from cracks, seams and other defects that would tend unduly to increase its deterioration from natural causes. The inclusion of objectionable quantities of dirt, sand, clay and rock fines will not be permitted.

2.1.2 Sources and Evaluation Testing

Riprap shall be obtained in accordance with the provisions in SECTION 00800 – STONE SOURCES, paragraph SP16. The Contractor shall submit suitable test reports and service records to show the acceptability of the riprap. If the Contractor proposes to furnish riprap from a source not currently listed, the Contractor will make such investigations as necessary to determine whether acceptable riprap can be produced from the proposed source. Satisfactory service records on work outside the Corps of Engineers will be acceptable. In order for riprap to be acceptable on the basis of service records, riprap of a similar size must have been placed in a similar thickness and exposed to weathering under similar conditions as is anticipated for this contract, and have satisfactorily withstood such weathering for a minimum of twenty years. If no such records are available, the Contractor will make tests to assure the acceptability of the stone. The tests to which the stone may be subjected will include petrographic analysis, specific gravity, abrasion, absorption, wetting and drying, freezing and thawing and such other tests as may be considered necessary by the Contracting Officer. The following guidance is provided for use by the Contractor in analyzing a new source of riprap. Riprap that weighs less than 155 pounds per cubic foot, or has more than 2% absorption will not be accepted unless other tests and service records show that the riprap is satisfactory. The method of test for unit weight will be CRD-C 106 and for absorption will be CRD-C 107. The cost of testing will be borne by the Contractor.

2.1.3 Gradation

Gradation shall conform to the table below and to Plate I at the end of this section and format thereof shall be as shown. Neither the width nor the thickness of any piece shall be less than one-third of it length. An allowance of 5 percent by weight for inclusion of quarry spalls will be permitted. Stone shall be reasonably well graded between the largest and smallest pieces. Table I below describes the upper and lower limit curves for the riprap gradation. The graph of the riprap when plotted on ENG Form 4055, with the limit curves plotted thereon, is inserted at the end of this section as Plate I. The Contractor shall submit to the Contracting Officer a copy of the plots on the gradation graph (PLATE I) for each size of riprap furnished.

TABLE I
(For Riprap "R-90")

Percent Lighter by Weight (SSD)	Limits of Stone Weight, lbs.
100	90 – 40
50	40 –20
15	20 –5

2.1.4 Test Method

Gradation test method shall conform to the requirements of "LMVD Standard Test Method for Gradation of Riprap" which is inserted at the end of this section as Plate II; an Example Gradation and Worksheet, an Example Gradation plotted on ENG Form 4055, and example Gradation Test Data Sheet; all inserted at the end of this section as Plates III, IV, and V.

2.1.5 Gradation Test

The Contractor shall perform a gradation test or tests on the riprap at the quarry. At least one gradation test shall be performed. The sample shall be taken by the Contractor under the supervision of the Contracting Officer, shall consist of not less than 30,000 pounds of riprap and shall be collected in a random manner which will provide a sample which accurately reflects the actual gradation arriving at the jobsite. The Contractor shall plot the test results on ENG Form 4055 and submit the plot to the Contracting Officer. If collected by the truckload, each truckload shall be representative of the gradation requirements. The Contractor shall provide all necessary screens, scales and other equipment, and the operating personnel therefor, and shall grade the samples, all at no additional cost to the Government. For each sample, the Contractor shall record, plot, and submit the gradation data using the forms noted at the end of this section, to the Contracting Officer.

PART 3 EXECUTION

3.1 BASE PREPARATION

Areas on which the riprap is to be placed shall be dressed to conform to cross sections shown on the contract drawings and as specified in SECTION 02219 - EXCAVATION, paragraph 1.3.2 Embedment of Stone Protection. Humps and depressions within the slope lines shall be dressed to provide relatively smooth and uniform surfaces. Immediately prior to placing the geotextile (filter fabric) material, the prepared base will be inspected by the Contracting Officer and no material shall be placed thereon until that area has been approved.

3.2 PLACEMENT OF FILTER FABRIC

Placement of the filter fabric shall be as specified in SECTION 02215- GEOTEXTILE (FILTER FABRIC) Paragraph 3.3 INSTALLATION.

3.3 RIPRAP

3.3.1 General

Riprap shall be placed on the prepared base and filter fabric within the limits shown on the drawings. Riprap shall be as specified in Paragraph 2.1 STONE above.

3.3.2 Placement

Riprap shall be placed in a manner which will produce a reasonably well-graded mass of rock with the minimum practicable percentage of voids, and shall be constructed, within the specified tolerance, to the lines and grades indicated on the contract drawings. A tolerance of plus 3-inches and minus 3-inches from the required finished surface of the riprap will be allowed provided these extremes do not occur adjacent to each other, and that neither extreme exists over more than 10 percent of the total area, and the thickness of the riprap shall at no point be less than 3-inches nor more than 6-inches from that shown on the drawings. Riprap shall be placed to its full course thickness in one operation and in such manner as to avoid displacing the geotextile. The larger stones shall be well distributed and the entire mass of stones in their final position shall be graded to conform to the gradation specified in 2.1.3 above. The finished riprap shall be free from objectionable pockets of small stones and clusters of larger stones. Placing riprap in layers will not be permitted. Placing riprap by dumping it at the top of the slope and pushing it down the slope will not be permitted. The desired distribution of the various sizes of stones throughout the mass shall be obtained by selective loading of the material at the quarry or other source; by controlled dumping of successive loads during final placing; or by other methods of placement which will produce the specified results. Rearranging of individual stones by mechanical equipment or by hand will be required to the extent necessary to obtain a reasonably well-graded distribution of stone sizes as specified above. The Contractor shall maintain the riprap until accepted and any material displaced prior to acceptance and due to the Contractor's negligence shall be replaced at his expense and to the lines and grades indicated on the contract drawings.

** End of Section **

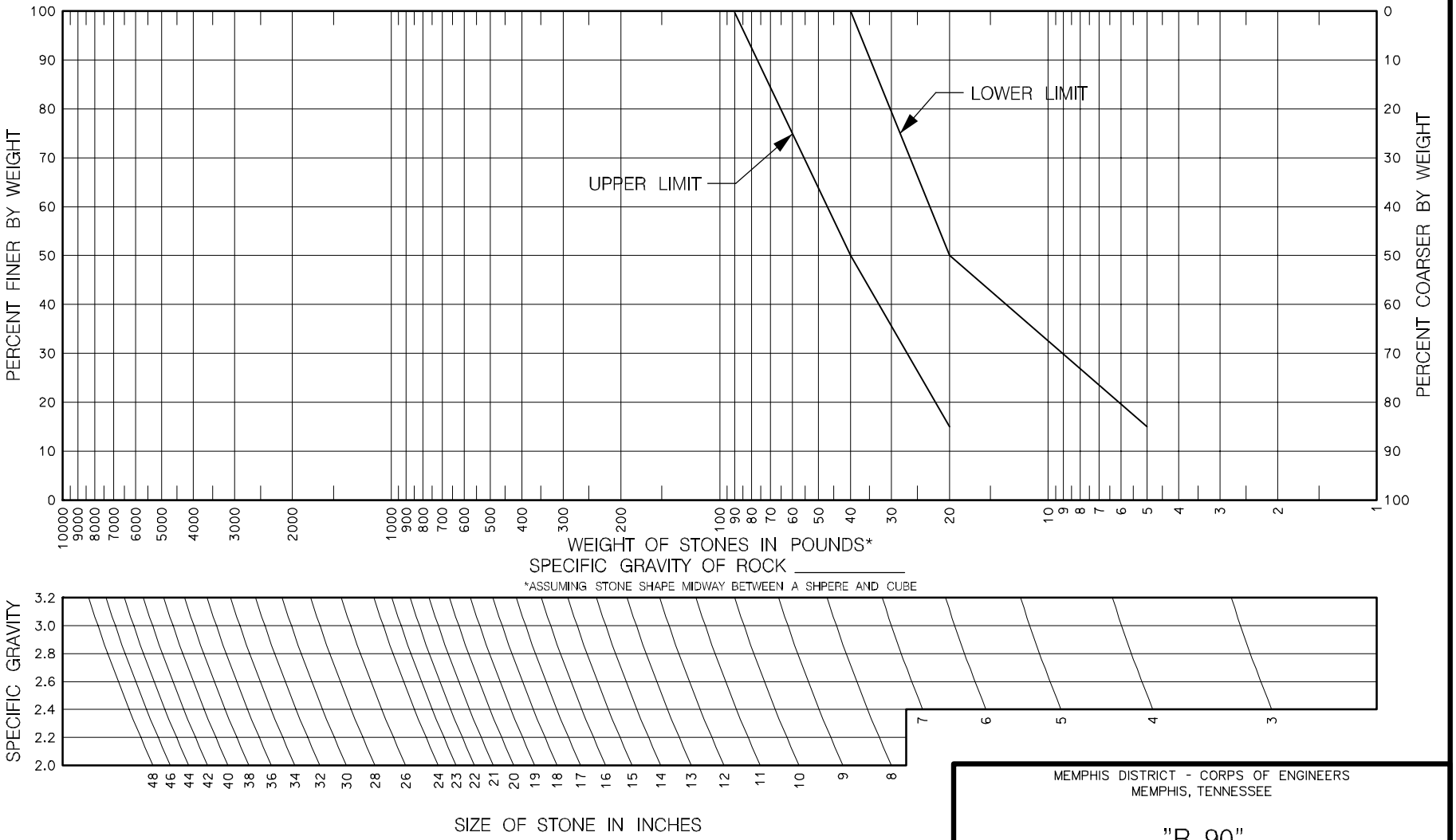

MEMPHIS DISTRICT - CORPS OF ENGINEERS
MEMPHIS, TENNESSEE

"R–90"

PROJECT: _____ DATE: _____

RIPRAP GRADATION CURVES

PLATE I

LMVD STANDARD TEST METHOD FOR GRADATION

A. Select a representative sample (Note #1), weigh and dump on hard stand.

B. Select specific sizes (see example) on which to run "individual weight larger than" test. (See Note #2). Procedure is similar to the standard aggregate gradation test for "individual weight retained".

C. Determine the largest size stone in the sample. (100% size)

D. Separate by "size larger than" the selected weights, starting with the larger sizes. Use reference stones, identified weights, for visual comparison in separating the obviously "larger than" stone. Stones that appear close to the specific weight must be individually weighed to determine size grouping. Weigh each size group, either individually or cumulatively.

E. Paragraph D above will result in "individual weight retained" figures. Calculate individual percent retained (heavier than) and cumulative percent retained and cumulative percent passing (lighter than). Plot percent passing, along with the specification curve on ENG Form 4055.

NOTES

1. Sample Selection. The most important part of the test and the least precise is the selection of a representative sample. No "standard" can be devised; larger quarry run stone is best sampled at the shot or muck pile by given direction to the loader; small graded riprap is best sampled by random selection from the transporting vehicles. If possible, all parties should take part in the sample selection and agree before the sample is run that the sample is representative.

2. Selection of Size for Separation. It is quite possible and accurate to run a gradation using any convenient sizes for the separation, without reference to the specifications. After the test is plotted on a curve, then the gradation limits may be plotted. Overlapping gradations with this method are no problem. It is usually more convenient, however, to select points from the gradation limits, such as the minimum 50% size, the minimum 15% size, and one or two others as separation points.

E X A M P L E G R A D A T I O N - S P E C I F I C A T I O N S

Stone Weight in Lbs.	Percent Finer by Weight
90 - 40	100
40 - 20	50
20 - 5	15

E X A M P L E G R A D A T I O N - W O R K S H E E T

Stone Size (lbs)	Weight Retained	Individual % Retained	Cumulative % Ret.	Cumulative % Pass	Specification % Finer by wt
90	0	0	-	100	
40	9600	30	30	70	100
20	11200	35	65	35	50
5	8000	25	90	10	15
< 5	3200	10	100	-	
Total Weight	32000lbs				

Remarks: LARGEST STONE SIZE = 78 LBS

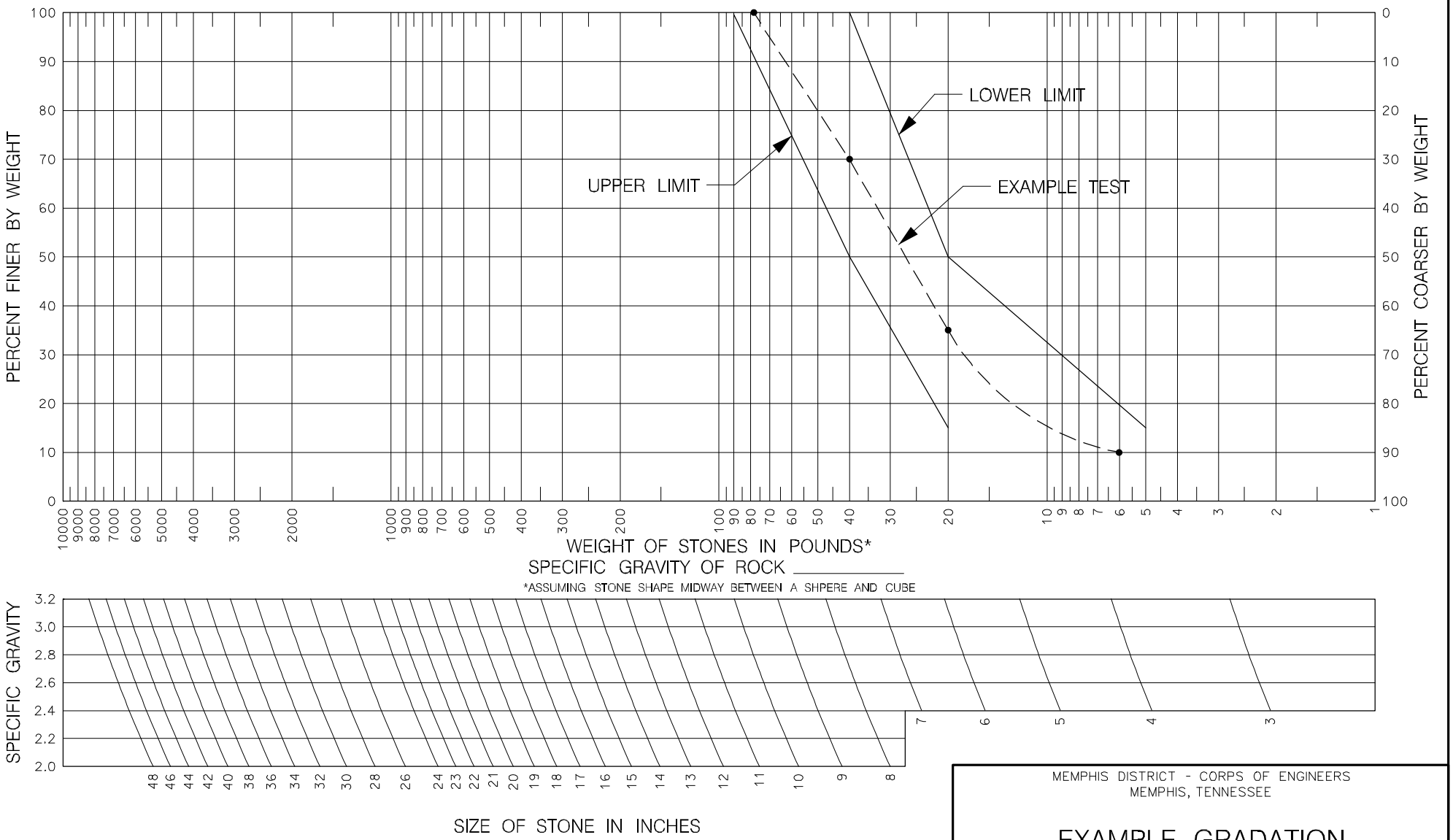

MEMPHIS DISTRICT - CORPS OF ENGINEERS
MEMPHIS, TENNESSEE

EXAMPLE GRADATION

PROJECT: _____ DATE: _____

RIPRAP GRADATION CURVES

PLATE IV

G R A D A T I O N T E S T D A T A S H E E T

Quarry _____ Stone Tested _____

Date of Test _____ Testing Rate _____

T E S T R E P R E S E N T S

Contract No.	District	Tons
	TOTAL	

G R A D A T I O N

Stone Size (lbs)	Individual Weight Retained	Individual % Retained	Cumulative %Coarser	Cumulative %Finer	Specification % Finer by wt
Total Weight					

Remarks:_____

I Certify that the above stone sample is representative of the total tonnage covered by this test report.

Contractor Representative _____

Government Representative _____

DIVISION 2 - SITE WORK

SECTION 02546

AGGREGATE SURFACING

TABLE OF CONTENTS

PART 1 GENERAL
- 1.1 SCOPE
- 1.2 QUALITY CONTROL
- 1.3 APPLICABLE PUBLICATION

PART 2 PRODUCTS
- 2.1 AGGREGATE
  - 2.1.1 Coarse Aggregate
  - 2.1.2 Fine Aggregate
  - 2.1.3 Gradation
- 2.2 SAMPLING AND TESTING
  - 2.2.1 General
  - 2.2.2 Contractor Testing

PART 3 EXECUTION
- 3.1 SUBGRADE
- 3.2 PLACEMENT

SECTION 02546

AGGREGATE SURFACING

PART 1 GENERAL

1.1 SCOPE

The work covered by this section consists of furnishing all plant, labor, and materials, and performing all operations necessary for constructing aggregate surfacing upon the crown of the levee as indicated on the drawings and/or specified herein.

1.2 QUALITY CONTROL

The Contractor shall establish and maintain quality control for the work specified in this section to assure compliance with contract requirements, and maintain records of his quality control for all construction operations including but not limited to the following:

(1) Subgrade

Location and preparation.

(2) Materials

Material delivered to the site conforms to specifications and is comparable to samples of material previously tested and approved for use. Tests include gradation, liquid limit and plasticity index of material passing the No. 40 sieve.

(3) Placement

Width, thickness, distribution, compaction, final grading, and maintenance.

A copy of these records and tests, as well as the records of corrective action taken, shall be furnished the Government.

1.3 APPLICABLE PUBLICATION

The following publication of the issues listed below, but referred to thereafter by basic designation only, form a part of this specification to the extent indicated by the references thereto:

AMERICAN SOCIETY FOR TESTING AND MATERIALS (ASTM) PUBLICATIONS.

C 136-95a	Test Method for Sieve Analysis of Fine and Coarse Aggregates.
D 422-63 1990)	Test Method for Particle-Size Analysis of Soils.
D 698-91	Laboratory Compaction Characteristics Using Standard Effort (12,400 ft-lbf/ft3 (600 kN-m/m3))
D 1556-90	Density and Unit Weight of Soil in Place by the Sand-Cone Method
D 2216-92	Water (Moisture) Content of Soil, Rock
D 2922-91	Density of Soil and Soil-Aggregate in Place by Nuclear Methods (Shallow Depth)
D 3017-88 (R 1993)	Water Content of Soil and Rock in Place by Nuclear Methods (Shallow Depth)
D 4318-93	Test Method for Liquid Limit, Plastic Limit, and Plasticity Index of Soils

PART 2 PRODUCTS

2.1 AGGREGATE

Aggregate for surfacing shall be composed of sand-clay-gravel mixtures; gravel or stone screenings; crusher run coarse aggregate consisting of gravel or crushed stone with sand and binding material; or any combination of such materials which conforms to specified requirements. All material shall be free from organic matter and lumps or balls of clay. The material shall conform to the requirements as specified in paragraphs 2.1.1 and 2.1.2, and shall conform to the gradation specified in paragraph 2.1.3. All aggregate surfacing furnished under this contract shall comply favorably with representative samples as to quality, gradation, and moisture content.

2.1.1 Coarse Aggregate

Coarse aggregate is defined as aggregate retained on the No. 10 (0.079-inch) sieve. Coarse aggregate shall consist of hard, durable particles or fragments of stone or gravel. Materials that are soft, pliable, or subject to rapid deterioration when exposed to weathering shall not be used.

2.1.2 Fine Aggregate

Fine aggregate is defined as aggregate passing the No. 10 (0.079-inch) sieve. Fine aggregate shall consist of natural or crushed sand, and also shall include fine mineral particles passing the No. 200 (0.003-inch) sieve. The fraction of the material passing the No. 200 (0.003-inch) sieve

shall be no more than two-thirds that of the fraction passing the No. 40 (0.017-inch) sieve. That portion of the aggregate passing the No. 40 (0.017-inch) sieve shall have a liquid limit of not more than 35 and a plasticity index of not less than 6, nor more than 15, as determined by ASTM D 4318. However, if crushed stone is utilized then the plasticity index shall be between 0 and 15.

2.1.3 Gradation

Aggregate surfacing material shall conform to the following gradation:

U.S. Standard Sieve	Permissible Limits Percent by Weight, Passing
3-inch	100
1½ inch	95 – 100
¾ inch	65 – 100
⅜ inch	40 – 80
No. 4	30 – 60
No. 10	20 – 50
No. 40	15 – 35
No. 200	5 – 15

2.2 SAMPLING AND TESTING

2.2.1 General

Representative samples for testing of the material shall be taken by the Contractor under the supervision of the Contracting Officer. All costs of sampling and testing, except as specified in 3.2 below, shall be borne by the Contractor and no separate payment will be made therefor.

2.2.2 Contractor Testing

Prior to delivery of any material to the job site, the material shall be tested for compliance With the specifications by an approved independent testing laboratory. In the event a noticeable change in the materials is observed during placement, such testing shall be performed at the direction of the Contracting Officer regardless of the quantity of material delivered. Certified results of the tests shall be submitted to the Contracting Officer for approval.

PART 3 EXECUTION

3.1 SUBGRADE

The subgrade shall be symmetrical about the centerline of the roadway embankment upon which aggregate surfacing is to be placed. Subgrade for all surfacing shall be graded and smoothed prior to placing the surfacing. Subgrade for the surfacing shall be in a satisfactory

condition for receiving aggregate surfacing for a distance of at least 150 feet in advance of the placing of aggregate surfacing material, as applicable. Aggregate shall not be placed on frozen ground.

3.2 PLACEMENT

Aggregate surfacing material shall be placed on the prepared subgrade as applicable to the limits of work as indicated on the drawings. Material placed shall be spread uniformly to such depths and lines that when compacted will have the applicable thickness, width, and cross section indicated therefore on the drawings. The aggregate surfacing materials shall be compacted to a density of at least 95 percent of the laboratory density obtained by the standard density test (ASTM D 698). The field density determination shall be by the Sand-Cone Method (ASTM D 1556) or the Nuclear Method (ASTM D 2922), Method B. The moisture content after compaction shall be within the limit of 2 percentage points above the optimum and 3 percentage points below optimum moisture contents determined by the Contractor in accordance with ASTM D 698. The materials may require moistening or aeration as necessary to provide the above specified moisture content. The field moisture content after compaction shall be performed in accordance with ASTM D 2216 or ASTM D 3017. To assure that proper compaction is being achieved, the Contractor shall perform a minimum of one field density and moisture content test per 100 cubic yards of material placed. The Contracting Officer can request field density and moisture content tests at any time that compaction appears inadequate. Tests shall be performed by an approved commercial testing laboratory or may be tested by facilities furnished by the Contractor. The first tests ordered by the Contracting Officer's Representative will be paid for by the Government. If the initial test fails, the additional testing will be paid for by the Contractor.

** End of Section **

DIVISION 2 - SITE WORK

SECTION 02707

CONTROL OF WATER

TABLE OF CONTENTS

PART 1 GENERAL
- 1.1 SCOPE
- 1.2 QUALITY CONTROL
- 1.3 GENERAL
- 1.4 CONTROL OF WATER REQUIREMENTS

PART 2 PRODUCTS (Not Applicable)

PART 3 EXECUTION
- 3.1 INITIAL TESTING
- 3.2 REVIEW OF SYSTEM DESIGN AND PERFORMANCE
- 3.3 OPERATION
- 3.4 MAINTENANCE AND SERVICING
- 3.5 REMOVAL

SECTION 02707

CONTROL OF WATER

PART 1 GENERAL

1.1 SCOPE

The work provided for herein consists of furnishing all plant, labor, material, and equipment and performing all operations required for designing, furnishing, installing and operating a system to maintain the area free from water during construction operations and removing the system.

1.2 QUALITY CONTROL

The Contractor shall establish and maintain quality control for all control of water operations to assure compliance with contracting requirements and maintain records of his quality control for all construction operations, including but not limited to the following:

(1) Fabrication and workmanship

(2) Installation, operation, and removal

(3) Monitoring free water surface and piezometric elevations

A copy of these records and tests, as well as the corrective action taken, shall be furnished to the Government. Reports of operation and inspection shall include the following data: piezometer elevations, river stages, problems encountered, proposed actions, and any other pertinent data.

1.3 GENERAL

All permanent work under this contract except as otherwise specified shall be carried on in areas free of water. The Contractor shall design, furnish, install, operate and maintain such facilities necessary to accomplish the following:

(1) Collect and dispose of all surface water in the protected area regardless of source.

(2) Control and dispose of all surface water around the periphery of the excavation areas to prevent such water from entering the excavation.

(3) Install and monitor construction piezometers.

1.4 CONTROL OF WATER REQUIREMENTS

The control of water system for the structural excavation area as shown on the drawings shall be of a type and capacity to accomplish all requirements specified herein.

(1) Construction activities can not take place unless the the ground water level is below Elev. 280.0.

(2) Protection of all slopes will be required to prevent erosion under normal surface runoff and construction conditions.

(3) A system of construction piezometers will be required to monitor free water surface elevations and piezometric elevations. Piezometers shall be of adequate numbers and in suitable arrangements and depths for determining the free water surface elevations and piezometric elevation over the area. A minimum of two piezometers shall be installed with general locations in the excavation area near the outlet structure and the inlet structure The two piezometers shall be installed in the underlying sand strata. The elevation of the tip of the screen will vary depending on the location of the piezometer and shall be placed to a minimum depth of 10 feet into the underlying sand strata. The piezometer construction shall consist of PVC riser pipe and screen (ASTM 1785, Schedule 40). Care shall be taken during construction to ensure that the piezometer is not damaged. The piezometers will be removed after the completion of the structures and culvert pipes. See paragraph 3.2 for submittal and approval of piezometer details and installation procedures. The Contractor shall make a minimum of one reading per piezometer, per 24-hour period, a minimum of 20 hours apart, based on a 7-day week. These piezometer readings, along with corresponding river stage readings, shall be recorded on an approved form and reported to the Contracting Officer within 12 hours after they are obtained. If, in the opinion of the Contracting Officer, more frequent readings are require, the Contractor will be directed as to the number and time that these readings are required. If additional readings are directed, an equitable adjustment in the contract unit price for dewatering will be made.

(4) Construction activities will be performed during low river stages. Dewatering (deep wells or well points) will not be allowed.

PART 2 PRODUCTS (Not Applicable)

PART 3 EXECUTION

3.1 INITIAL TESTING

Upon installation of the system, the Contractor shall test and evaluate the completed system to demonstrate to the satisfaction of the Contracting Officer that the system is, in fact, capable of performing the intended control of water operation as outlined herein. This testing shall include complete falling head tests to be conducted on each piezometer.

3.2 REVIEW OF SYSTEM DESIGN AND PERFORMANCE

The Contractor shall submit to the Contracting Officer details of the proposed ditches, piezometers, number, type, location, proposed method of installation, and proposed methods of testing of

piezometers. This submittal shall be submitted no later than 30 days prior to installation of the system. The Contractors proposed control of water system will be reviewed for general design concept. The Contractor retains full responsibility for design, installation, operation and performance of the system, facilities, and its components. If during the progress of the work, the installed system proves inadequate to meet the requirements specified, including piezometers, the Contractor shall, at his expense, furnish, install, and operate such additional facilities and/or make such changes, either in features of the system or the plan of operation, as may be necessary to perform the required control of water in a satisfactory manner. Such changes and additions shall be approved in writing by the Contracting Officer prior to being made.

3.3 OPERATION

The Contractor will be required to perform such control of water and to maintain the work areas in a dry condition as long as is necessary for the work under this contract.

3.4 MAINTENANCE AND SERVICING

The Contractor shall be responsible for the maintenance, servicing, and repairs of the entire control of water system and appurtenances during the life of the contract, including replacement of any piezometers found performing unsatisfactorily.

3.5 REMOVAL

The control of water system required to maintain a dry condition within the protected area shall be maintained until completion of the work within the protected area, and then shall be completely removed. All holes shall be plugged as follows: The riser pipes for all piezometers shall be completely removed and the holes filled with bentonite cement grout. Plugging shall be accomplished by inserting a grout pipe to the full depth of the riser pipe and the grout either poured or pumped in as the riser pipe is removed. The grout for plugging the hole shall consist of a mixture of portland cement, bentonite, and water proportioned as directed by the Contracting Officer. The water percentage may be varied for a more effective plugging job. The grouting of abandoned piezometer riser pipes in lieu of removing them will not be permitted unless approved by the Contracting Officer.

** End of Section **

DIVISION 2 - SITEWORK

SECTION 02720

STORM-DRAINAGE SYSTEM

TABLE OF CONTENTS

PART 1 GENERAL....1
1.1 REFERENCES....1
1.2 SUBMITTALS....1
1.3 DELIVERY, STORAGE, AND HANDLING....2
1.3.1 Delivery and Storage....2
1.3.2 Handling....2

PART 2 PRODUCTS....2
2.1 REINFORCED CONCRETE PIPE....2
2.2 GROUT 4
2.3 PRECAST CONCRETE FLARED END SECTION (F.E.S.)....3

PART 3 EXECUTION....3
3.1 CULVERT INSTALLATION BY BORING AND JACKING....4
3.1.1 Insallation....4
3.1.1.1 Pressure Grouting....4
3.1.1.2 Bore Pits....5
3.1.2.3 Monitoring....5
3.2 CULVERT INSTALLATION BY TUNNELING....6
3.2.1 General....6
3.2.2 Tunneling/Boring and Jacking Operation....6
3.2.2.1 Liner Plate....6
3.2.2.2 Pressure Grouting.... 6
3.3 CULVERT INSTALLATION OUTSIDE OF TUNNEL....6
3.4 JOINING PIPE....7
3.5 CARRIER PIPE IN ENCASEMENT....8

STORM-DRAINAGE SYSTEM

PART 1 GENERAL

1.1 REFERENCES

The publications listed below form a part of this specification to the extent referenced. The publications are referred to in the text by basic designation only.

AMERICAN ASSOCIATION OF STATE HIGHWAY AND TRANSPORTATION OFFICIALS (AASHTO)

AASHTO M 36	Standard Specification for Corrugated Steel pipe, metallic coated
AASHTO M 170	(1993) Reinforced Concrete Culvert, Storm Drain, and Sewer Pipe
AASHTO M 198	(1993) Joint for Circular Concrete Sewer And Culvert Pipe Using Flexible Watertight Gaskets
AASHTO M 274	Standard Specification for Steel Sheet Aluminum-Coated (Type 2) for Corrugated Steel Pipe
AASHTO T 280	Concrete Pipe, Sections, or Tile

AMERICAN SOCIETY FOR TESTING AND MATERIALS (ASTM)

ASTM C 76	(1990) Reinforced Concrete Culvert Storm Drain; and Sewer Pipe

1.2 SUBMITTALS

Government approval is required for submittals with a "GA" designation; submittals having an "FIO" designation are for information only. The following shall be submitted in accordance with Section 01330 SUBMITTAL PROCEDURES:

SD-06 Instructions

Placing Pipe; FIO.

Printed copies of the manufacturer's recommendations for installation procedures of the material being placed, prior to installation including gasket installation procedures.

SD-08 Statements
Grouting Plan; FIO.

Statement of plan for grouting encasement pipe and carrier pipe including grout mix design, grout placement procedures and other pertinent information.

Jacking or Tunneling Plan; FIO

Detailed statement of plan for boring and jacking operation or tunneling plan including jacking equipment, procedures, materials and construction sequence.

Emergency Closure Plan; FIO.

Statement of plan for emergency closure of the replacement culvert in the event of imminent flooding of the construction site from river flooding.

SD-14 Records

Pipe for Culverts and Storm Drains; FIO

Samples of the following materials before work is started; pipe gaskets material.

1.3 DELIVERY, STORAGE, AND HANDLING

1.3.1 Delivery and Storage

Materials delivered to site shall be inspected for damage, unloaded, and stored with a minimum of handling. Materials shall not be stored directly on the ground. The inside of pipes and fittings shall be kept free of dirt and debris. Gasket material and plastic materials shall be protected from exposure to the direct sunlight over extended periods.

1.3.2 Handling

Materials shall be handled in such a manner as to ensure delivery to the trench in sound, undamaged condition. Pipe shall be carried to the trench, not dragged.

PART 2 PRODUCTS

2.1 REINFORCED CONCRETE PIPE

Pipe for culverts shall be of the sizes indicated on the plans and shall be as specified herein.

Reinforced concrete pipe shall be ASTM C 76. Class V. The concrete pipe shall be tongue and groove. Test shall be conducted according to AASHTO T 280.

The manufacture and furnishing of circular pipe shall be according to the provisions of

AASHTO M 170 with a minimum B wall thickness. Joints shall be sealed with bitumen/butyl rubber plastic gaskets complying with AASHTO M 198, Type A or B, except that Type B shall have a Specific Gravity of 1.20 to 1.45.

2.2 GROUT

A detailed grouting plan which includes equipment, materials, construction procedures and sequence, mix design, pumping pressures, location of injection ports and any other pertinent information shall be submitted to the Contracting Officer a minimum of 30 days prior to the start of the grouting operation..The grout mix shall have a minimum 28-day compressive strength of 2500 psi. The grout shall have suitable air-entraining admixture, and sufficient water to produce a workable mixture as determined by the Contracting Officer. The use of additional admixtures in the mix design shall be subject to government approval. The grout shall be mixed in a manner so as to produce a mixture having a consistency that will permit pressure grouting into the interstices of the culvert. The grout shall be used in the work within 90 minutes after the addition of water to the mix. Retempering of grout will not be permitted. Pressure grouting will not be allowed when the ambient temperature is below 40 degrees F or above 85 degrees F unless approved by the Contracting Office in writing. See paragraph 3.1.1.1 below for details on the pressure grouting procedure.

Grout test shall be conducted in accordance with ASTM C 109 in a laboratory, approved by the Contracting Officer. Test specimens shall be prepared by pouring grout into 2 by 2 by 2 inch cube molds. Not less than nine cudes shall be cast during each 8-hour shift. Three cubes shall be tested at 7 days; three at 28 days; and three at 90 days.

2.3 PRECAST CONCRETE FLARED END SECTION (F.E.S.)

Precast concrete flared end section shall be of the size indicated on the plans and shall be as specified herein.

Precast concrete flared end section shall conform to the applicable requirements of AASHTO M-170 Class III, Wall B reinforced concrete pipe.

PART 3 EXECUTION

Reinforced concrete pipes to be placed through the existing levee embankment may be installed using boring and jacking method, tunneling method or any approved alternative method which will ensure the stability of levee embankment and construction excavation and meet all construction tolerances detailed below. All approved methods shall include encasement pipes or liner plates to serve as shoring during the boring and jacking/ tunneling operation. Shoring members shall be installed as the excavation proceeds. Reinforced concrete pipes shall be placed within the encasement pipe / liner plate to the line and grade shown on the plans. The space between the RCP and encasement pipe / liner plate shall be grouted. In addition, all voids between the soil and encasement pipe or liner plates created during the installation process shall be grouted as outlined in paragraph 3.1.1.1. Prior to the commencement of construction through

or on the riverside of the existing levee, the Contractor shall submit a plan for the emergency closure of the pipe should a high water event occur. The plan shall demonstrate that the Contractor has at the site all equipment, material, and manpower to seal the pipe with a watertight steel plate and then cover the pipe with 5 feet of compacted CL/CH material. If unstable conditions are encountered, during the tunneling / boring and jacking operations, the contractor shall take whatever action is necessary to prevent running, flowing or squeezing ground conditions at the cutting face from causing large voids or significant loss of soil that may cause surface settlement

A jacking/tunneling plan shall be submitted by the Contractor 30 days prior to commencement of any jacking or tunneling operations. The plan shall include a proposed method of operation, proposed method of handling, including the design for the jacking head, jacking support or back stop, arrangement and position of jacks, pipe guides, required shoring, pipe, liner plate, etc., complete as assembled in position. The plan shall also include a schedule for the jacking/tunneling operations.

3.1 CULVERT INSTALLATION BY BORING AND JACKING

3.1.1 Installation

The Contractor shall submit a jacking plan. At a minimum, this plan shall include technical specifications for the boring and jacking equipment. Shop drawings and material specification for the encasement pipe and 36 inch I.D. RCP. The pit location, size and shoring shall also be included. Installation of the encasement pipe shall be carried out in such manner that there will be no settlement of the ground surface above the encasement pipe. The Contractor shall take all precautions to prevent caving of the soils ahead of the pipe. During encasement installation, the Contractor shall use all care to minimize space (voids) between the outside of the encasement pipe and the surrounding ground. The outside of encasement pipe installed by boring and jacking shall be pressure grouted to eliminate voids according to Paragraph 3.1.1.1. The Contractor shall submit a grouting plan for both the grouting of the encasement pipe and the grouting of the annular space between the encasement pipe and carrier pipe.

The Contractor shall inspect the locations where the encasement pipe and bore pits are to be installed and familiarize himself with the conditions under which the work will be performed and with all necessary details for the orderly prosecution of the work. The omission of any details in the Plans and/or herein for installation of the encasement and carrier pipe shall not relieve the Contractor of full responsibility for the proper execution and integrity of the work.

The Contractor shall satisfy himself of soils condition by any means he deems necessary, i.e., exploratory boring or exploratory pit excavations at bore ends. Any such exploratory work shall be done in such manner as to not jeopardize the stability of the levee embankment and shall be backfilled and cleaned up to the satisfaction of the Contracting Officer. The Contractor shall be responsible to obtain his own permission and to furnish bonds, etc. as may be required by private landowners or the public authority having jurisdiction at the site of any such exploratory work.

The Contractor shall perform all excavation required to complete the work regardless of the

material encountered. Excavated material from the access shafts (bore pits) in excess of that required to backfill the access shafts and open cut portion of the line shall be disposed of in the Old Outlet Ditch as shown on the Drawings. Pits and trenches shall be properly shored, sheeted, and braced according to Paragraph 3.1.1.2.

The Contractor shall repair any damage to the encasement pipe coating during shipment or handling. Boring and jacking of smooth wall pipe shall be by competent supervisors and workmen specializing in this type of work and shall be the responsibility of the Contractor. Any section of pipe that shows signs of failure shall be removed and replaced with the same type of pipe.

The encasement alignment shall be maintained within a tolerance of one-tenth (0.10) of a foot of the tangent line and grade.

Boring and jacking shall be continuous until completion.The distance that the excavation shall extend beyond the end of the pipe depends on the character of the material, but it shall not exceed 1 feet in any case.

Excavated material will be placed near the top of the working pit and disposed of in the Old Outlet Ditch as shown on the Drawings. The use of water or other fluids in connection with the boring operation will be permitted only to the extent to lubricate cuttings; sluicing and jetting with water will not be permitted. In unconsolidated soil formations, a gel-forming colloidal drilling fluid consisting of at least 10 percent of high grade carefully processed bentonite may be used to consolidate cuttings of the bit, seal the walls of the hole, and furnish lubrication for subsequent removal of cuttings and installation of the pipe immediately thereafter.

The jacking/tunneling contractor/subcontractor shall have at least five years of experience with the equipment and procedures to be used on this project and have successfully completed at least three projects of similar type in the past five years. The workmen shall be experienced in the operation of tunneling/jacking and boring operation.

3.1.1.1 Pressure Grouting

During installation of the encasement pipe, care shall be exercised to prevent voids between the encasement and the surrounding ground. Grout shall conform to the requirements of Paragraph 2.2 above.

The space between the encasement pipe and the ground shall be pressure grouted to eliminate all voids. Grout shall have a minimum 28-day compressive strength of 2500 psi.

The grout shall be injected through the encasement pipe wall through 1.5” to 2.0” diameter holes from the inside at one location for each 5.0-foot linear interval over the entire length of the encasement pipe.

3.1.1.2 Bore Pits

The contractor is responsible for the design of the pit floor and jacking thrust restraint wall to carry the cyclic loads and thrust applied by the contractors operation. The Contractor shall provide a bore pit(s) of sufficient size to safely perform all work for the installation of encasement pipe, carrier pipe, and all appurtenances. The bore pits shall be sheeted, shored, and braced on all sides and as addressed herein to comply with all applicable state and federal regulations. Sheeting shall be timber or steel piling of ample strength to safely withstand all structural loading of whatever nature due to site and soil condition. The top of the sheeting shall be at a minimum elevation equal to the ground line. Diversion of drainage or dewatering of pits during construction shall be provided by the Contractor, as necessary, at no additional cost to the Government. Water shall not be allowed to accumulate in the jacking pit. All components of the jacking pit shall be removed after installation of the pipe unless otherwise allowed by the contracting officer.

3.1.1.3 Monitoring

Prior to any jacking, boring, or tunneling work, the Contractor shall install elevation reference benchmarks above the pipe work. Their elevation shall be read and recorded daily. Readings shall be taken continuously during construction and continue a reasonable time after completion of installation.

3.2 CULVERT INSTALLATION BY TUNNELING

3.2.1 General

A tunneling plan shall be submitted by the Contractor to the Contracting Officer a minimum of 30 days prior to the start of the tunneling operation. At a minimum, this plan shall include technical specifications for the tunneling equipment and shop drawings and material specification for the liner plate and 36 inch I.D. RCP. The pit location, size and shoring shall also be included. Installation of the encasement shall be carried out in such manner that there will be no settlement of the ground surface above the encasement. The Contractor shall take all precautions to prevent caving of the soils ahead of the pipe. During encasement installation, the Contractor shall use all care to minimize space (voids) between the outside of the encasement pipe and the surrounding ground. The outside of encasement pipe installed by tunneling shall be pressure grouted according to the grouting plan previously submitted to eliminate voids according to Paragraph 3.1.1.1, unless excepted therein.

3.2.2 Tunneling Excavation

The contractor shall place reinforced concrete pipe using the tunneling method to ensure the stability of the levee embankment and construction excavation and to meet all construction tolerances stated herein. Encased pipe, liner plates or similar shoring members shall be used as shoring. Shoring members shall be installed as the excavation proceeds. Excavation tolerances for the tunneling method shall be the same as stated for the boring and jacking method.

3.2.2.1 Liner Plate

The liner plate shall be installed using the fasteners furnished with the plate sections and / or as recommended by the liner manufacturer. Plates shall be installed to prevent the loss of earth material. Holes for connecting bolts shall be accurately matched and no reaming or other distorting of the holes will be allowed. Plates shall be designed so that they may be assembled from within the liner ring. If, after initiating tunneling, the vertical deflections exceed 3% of the outside liner plate diameter, the liner plate thickness shall be increased as work progresses.

3.2.2.2 Pressure Grouting

Pressure grouting shall be used to fill the voids behind the tunnel liner. The grout shall conform to the requirements of 3.1.1.1. After grout is placed, the holes shall be plugged with threaded pressure nuts in such a manner that buckling and shifting of the liner ring and unsafe displacement of earth material or upheaval of the overlying levee will not occur. Any damage to the liner ring, levee or roadway, due to grouting shall be repaired by the Contractor, at his expense, as required by the Contracting Officer.

3.3 CULVERT INSTALLATION OUTSIDE OF TUNNEL

That portion of the culvert placed outside the tunnel shall rest on a bedding of granular foundation as indicated on the drawings. The bedding material shall conform to the gradation as specified in Section 02220 Paragraph 2.1.1. The pipe sections shall be joined together using a compression type rubber gasket at each section as indicated in 3.5 below. Compaction of material around the pipe shall conform to the applicable requirements of 02220.

3.4 JOINING PIPE

The method of joining pipe sections shall be such that the male ends and female ends are fully engaged and the inner surfaces are flush and even within the tolerances of AASHTO M 170.

All surfaces on which joint seal gaskets may bear shall be smooth, free of spalls, cracks, fractures, and imperfections that would adversely affect the performance of the joint. A primer shall be applied if recommended by the manufacturer.

The following procedure shall be used for bitumen/butyl plastic gaskets. The protective wrapping shall be removed from one side of the gasket. The gasket shall be placed and pressed firmly to the surface of the pipe joint around the entire circumference of the joint. The remaining protective wrapping shall be removed and the pipe forced into connection until material fills the joint space.

To ensure an even and well-filled joint, the final joining of the pipe shall be accomplished by either pushing or pulling, by approved mechanical means, each joint of the pipe as it is laid. In cold weather, when directed, the joint material shall be warmed in a hot water bath, or by other approved methods, to the extent required to keep the material pliable for placement without breaking or cracking.

A sufficient length of carrier pipe shall extend beyond each end of the encasement pipe to facilitate the installation of the 36 inch precast flared end section and the outlet structure.

3.5 CARRIER PIPE IN ENCASEMENT

Installation of the carrier pipe in the encasement shall be accomplished in such manner that neither the pipe nor the encasement is damaged. Care must be exercised to assure that the joints of the pipe are not over-deflected or pulled out during the process. The pipe shall be jointed and pushed or jacked through the encasement. Cables, chains, jacks or other equipment or devices used shall not be in direct contact with the pipe unless thoroughly padded. Skids, chocks, and hold-down jacks shall be provided for stability during installation and after the pipe is in place.

End of Section

DIVISION 2 - SITE WORK

SECTION 02938

ESTABLISHMENT OF TURF

TABLE OF CONTENTS

PART 1 GENERAL
- 1.1 SCOPE
- 1.2 QUALITY CONTROL
- 1.3 SUBMITTALS
- 1.4 AREAS TO BE TURFED

PART 2 PRODUCTS
- 2.1 MATERIALS
  - 2.1.1 Fertilizer (and Limestone)
  - 2.1.2 Mulch
  - 2.1.3 Water
  - 2.1.4 Sod
  - 2.1.5 Sprigs
  - 2.1.6 Seed (Permanent)
  - 2.1.7 Seed (Temporary)
  - 2.1.8 pH Adjuster
  - 2.1.9 Soil for Repairs
  - 2.1.10 Pesticide
- 2.2 SAMPLING AND TESTING
  - 2.2.1 General
  - 2.2.2 Soil Testing
  - 2.2.3 Material Testing
    - 2.2.3.1 Fertilizer and Limestone (If Used)

PART 3 EXECUTION
- 3.1 COMMENCEMENT, PROSECUTION, AND COMPLETION
  - 3.1.1 General
  - 3.1.2 Sequence of Work
- 3.2 PREPARATION OF GROUND SURFACE
  - 3.2.1 General
  - 3.2.2 Clearing
  - 3.2.3 Grading
- 3.3 APPLICATION OF FERTILIZER AND/OR LIMESTONE (If Used)
- 3.4 SODDING
- 3.5 SPRIGGING
- 3.6 SEEDING
- 3.7 ESTABLISHMENT AND ACCEPTANCE

3.7.1 Establishment
3.7.2 Acceptance

SECTION 02938

ESTABLISHMENT OF TURF

PART 1 GENERAL

1.1 SCOPE

The work covered by this section consists of furnishing all plant, labor, equipment, and materials, and performing all operations necessary for the temporary and permanent establishment and mowing of turf on areas either as specified herein or as shown on the drawings.

1.2 QUALITY CONTROL

The Contractor shall establish and maintain quality control for turfing operations to assure compliance with the contract requirements and shall maintain records of his quality control for all construction operations, including but not limited to the following:

(1) Soil Testing

The tests required are in paragraph 2.2.2 below.

(2) Preparation of Ground Surface

Location and quality of finish dressing, including necessary clearing, filling, or dressing out of washes, smoothness and uniformity of surfaces, and time of year.

(3) Fertilizing (and Liming)

Quality of materials, area fertilized (and limed), quantity applied, and method of application.

(4) Type of Turf

Quality, source, placing, covering, and compaction effort.

(5) Mulching

Type of materials, area mulched, quantity applied, method of application.

(6) Maintenance and Repair

Location and type of maintenance problems and remedial treatment performed.

(7) Watering

Quality of water, area watered, quantity applied, and method of application.

A copy of these records and tests, as well as the records of corrective action taken, shall be furnished the Government.

1.3 SUBMITTALS

Government approval is required for submittals with a "GA" designation; submittals having an "FIO" designation are for information only. The following shall be submitted in accordance with Section 01330 SUBMITTAL PROCEDURES:

SD-08 Statements

Work Plan; FIO.

The procedures proposed for the accomplishment of the work. The procedures shall include a detailed description of the methods and equipment to be used for each operation, and the sequence of operations in accordance with EM 385-1-1.

SD-09 Reports

Soil Test; FIO.

Certified reports of inspections and laboratory tests, prepared by an independent testing agency, including analysis and interpretation of test results. Each report shall be properly identified. Test methods used and compliance with recognized test standards shall be described.

SD-13 Certificates

Seed; FIO. pH Adjuster; FIO. Fertilizer; FIO. Mulch; FIO. Pesticide; FIO.

Prior to the delivery of materials, certificates of compliance attesting that materials meet the specified requirements. Certified copies of the material certificates shall include the following:

a. Seed. Classification, botanical name, common name, percent pure live seed, minimum percent germination and hard seed, maximum percent weed seed content, and date tested.

b. pH Adjuster. Calcium carbonate equivalent and sieve analysis.

c. Fertilizer. Chemical analysis and composition percent.

d. Mulch: Composition and source.

e. Pesticide. EPA registration number and registered uses.

SD-18 Records

Seed Establishment Period; FIO.

Calendar time period for the seed establishment period. When there is more than one seed establishment period, the boundaries of the seeded area covered for each period shall be described.

Maintenance Record; FIO.

Maintenance work performed, area repaired or reinstalled, diagnosis for unsatisfactory stand of grass plants.

Application of Pesticide; FIO.

Pesticide treatment plan with sequence of treatment work with dates and times. The pesticide trade name, EPA registration number, chemical composition, formulation, concentration of original and diluted material, application rate of active ingredients, method of application, area treated, amount applied; and the name and state license number of the state certified applicator shall be included.

1.4 AREAS TO BE TURFED

Turf shall be established on all disturbed areas within the right-of-way limits and on all newly constructed permanent embankments, including material placed in the excess excavated material area and old existing channels, except on areas to receive other types of surfacing and on channel slopes and bottoms. In addition, the Contractor will be required to plant temporary turf or place other temporary erosion prevention measures, as shown on the drawings, pending establishment of the permanent turf.

PART 2 PRODUCTS

2.1 MATERIALS

2.1.1 Fertilizer (and Limestone)

Fertilizer shall meet the requirements of the State of Missouri for commercial fertilizer. Quantity of fertilizer (and lime) required per acre shall be determined by certified soil tests as specified in paragraph 2.2.2 below. Limestone shall be approved agricultural grade limestone containing not less than 85 percent total carbonates. Limestone shall be ground to such fineness that 25 percent will pass a 100-mesh sieve and 100 percent will pass an 8-mesh sieve.

2.1.2 Mulch

Material used for mulching shall be materials that do not contain noxious grass or weed seed that might be detrimental to the turfing being established or to adjacent farmland.

2.1.3 Water

Water used,as an aid for turf establishment, shall be free of injurious quantities of oil, acid, alkali, salt, and other substances harmful to growth of grass.

2.1.4 Sod

Sod used to turf the areas specified shall contain a minimum of 85 percent Bermuda grass. Sod that contains noxious grasses and weeds that might be detrimental to the turfing being established will not be acceptable.

2.1.5 Sprigs

Sprigs used to turf the areas specified shall contain a minimum 85 percent of Bermuda grass. Sprigs that contain noxious grasses and weeds that might be detrimental to the turfing being established will not be acceptable.

2.1.6 Seed (Permanent)

Seed used to turf the areas specified shall contain a minimum of 82 percent pure live Bermuda seed. Seed that contains noxious grasses and weeds that might be detrimental to the turfing being established will not be acceptable.

2.1.7 Seed (Temporary)

Seed used for temporary surface erosion control or overseeding the areas specified shall contain a minimum of 89 percent pure live wheat seed. Seed that contains noxious grasses and weeds that might be detrimental to the turfing being established will not be acceptable.

2.1.8 pH Adjuster

The pH adjuster shall be an agricultural liming material in accordance with ASTM C 602. These materials may be burnt lime, hydrated lime, ground limestone sulfur, or shells. The pH adjuster shall be used to create a favorable soil pH for the plant material specified.

2.1.9 Soil for Repairs

For fill of areas to be repaired, soil shall be of a quality at least equal to that which exists in areas adjacent to the area to be repaired. Soil used shall be free from roots, stones, and other materials that hinder grading, planting, and maintenance operations and shall be free from objectionable weed seeds and toxic substances.

2.1.10 Pesticide

Pesticide shall be insecticide, herbicide, fungicide, nematocide, rodenticide or miticide. For the purpose of this specification, a soil fumigant shall have the same requirements as a pesticide. The pesticide material shall be EPA registered and approved.

2.2 SAMPLING AND TESTING

2.2.1 General

Sampling and testing shall be the responsibility of the Contractor and shall be performed at no additional cost to the Government. Sampling and testing shall be performed by a recognized testing agency.

2.2.2 Soil Testing

Prior to beginning turfing operations, soil from the areas to be turfed shall be tested to determine soil-nutrient and limestone requirements. At least one sample per acre shall be tested. Certified test results, and application rates for nitrogen, phosphorous, potash, and limestone , indicated by the soil tests shall be furnished to the Contracting Officer for approval prior to fertilizing.

2.2.3 Material Testing

2.2.3.1 Fertilizer and Limestone

Duplicate signed copies of invoices from suppliers shall be furnished. Invoices for fertilizer shall show quantities and the percentages of nitrogen, phosphorous, and potash. If limestone is used, the limestone invoice shall show the quantity and the percentages of limestone that pass the 100- and 8-mesh sieves. Upon completion of the project, a final check of the total quantity of fertilizer used will be made against total area treated, and if minimum rates of application have not been met, an additional quantity of material sufficient to make up the minimum application rate shall be distributed as directed.

PART 3 EXECUTION

3.1 COMMENCEMENT, PROSECUTION, AND COMPLETION

3.1.1 General

The dressing and turfing operation for embankments shall commence as soon as practicable following the completion of construction in an area. Dressing and turfing operations on other areas shall commence upon completion of all work in that area. Prior to prosecuting the turfing operation, the Contractor shall repair rainwash, if any, dress, and prepare the areas for turfing.

3.1.2 Sequence of Work

The sequence of operations for work prescribed in this section shall be as follows:

(1) Preparation of ground surface.

(2) Fertilizing.

(3) Sodding, sprigging or seeding.

(4) Compacting where applicable.

3.2 PREPARATION OF GROUND SURFACE

3.2.1 General

Equipment, in good condition, shall be provided for the proper preparation of the ground and for handling and placing all materials. Equipment shall be approved by the Contracting Officer before work is started.

3.2.2 Clearing

Prior to grading and finish dressing, vegetation that may interfere with turfing operations shall be removed and shall be disposed of as specified in Section 02110, paragraph 3.3. The surface shall be cleared of roots, cable, wire, and other materials that might hinder the work or subsequent maintenance.

3.2.3 Grading

Previously established grades and/or slopes and any other disturbed areas shall be prepared for fertilizing and sodding or sprigging by finish dressing. Necessary repairs to previously graded areas shall be with suitable material placed and compacted in accordance with Section 02220, paragraphs 3.2 and 3.3. Suitable material for repairs may be obtained from the excavation area(s) indicated on the drawings. The surface of the levee embankment may be disked, harrowed or tilled to a 4-6 inch depth in order to facilitate grass growth.

3.3 APPLICATION OF FERTILIZER AND/OR LIMESTONE

Fertilizer and limestone shall be disturbed uniformly over the areas to be turfed at the rate determined as specified in 2.2.2 above and shall be incorporated into the soil by light disking, harrowing, or other acceptable methods immediately following the application.

3.4 SODDING

If the Contractor elects to sod, the areas to be turfed shall be sodded with Bermuda grass in any manner selected by the Contractor to meet the coverage requirements set forth in paragraph 3.7.2 below.

3.5 SPRIGGING

If the Contractor elects to sprig, the areas to be turfed shall be sprigged with Bermuda grass in any manner selected by the Contractor to meet the coverage requirements set forth in 3.7.2 below.

3.6 SEEDING

If the Contractor elects to seed, the areas to be turfed shall be seeded with Bermuda grass in any manner selected by the Contractor to meet the coverage requirements set forth in 3.7.2 below.

3.7 ESTABLISHMENT AND ACCEPTANCE

3.7.1 Establishment

The Contractor shall be responsible for the turfed areas while grass is becoming established to the point of acceptance by the Contracting Officer. During establishment and prior to acceptance of the turfed areas, the Contractor shall repair rainwash damage, if any, to the completed embankment at no additional cost to the Government. The turfed areas, including disturbed and undisturbed areas within the right-of-way, shall be maintained by mowing for the life of the contract. Turfed areas shall be kept mowed to a height between 4 and 12 inches above the turfed earth surface. Should the Contractor fail to mow the turfed areas to the limits as specified above, the Government will assume the responsibility for the mowing and deduct the cost thereof from any payments due the Contractor.

3.7.2 Acceptance

Acceptance of the turfed areas will be determined by visual inspection made one calendar year after final planting.. Existence of rainwash damage or dead and dying turf will not be acceptable.

Turfing will be considered to be completed when the areas to be turfed show that growth of the specified grass has reached a point of maturity such that it has produced stems or runners which overlap adjacent similar growth over 85 percent of the entire area as determined by random sampling on a square-yard basis with no bare spot exceeding 0.25 square feet.

Areas being inspected for completion that do not meet the requirements for completion as specified hereinabove shall be returfed at no additional cost to the Government.

** End of Section **

DIVISION 3 — CONCRETE

SECTION 03100

FORMWORK FOR CONCRETE

TABLE OF CONTENTS

PART 1 GENERAL
- 1.1 SCOPE AND RELATED WORK
  - 1.1.1 Scope
  - 1.1.2 Related Work Specified Elsewhere
- 1.2 QUALITY CONTROL
- 1.3 APPLICABLE PUBLICATIONS
- 1.4 SUBMITTALS
  - 1.4.1 Shop Drawings
  - 1.4.2 Manufacturer's Literature

PART 2 PRODUCTS
- 2.1 MATERIALS
  - 2.1.1 Forms
    - 2.1.1.1 General
    - 2.1.1.2 Class "B" Finish
    - 2.1.1.3 Class "D" Finish
  - 2.1.2 Form Accessories
  - 2.1.3 Form Coating

PART 3 EXECUTION
- 3.1 DESIGN
- 3.2 INSTALLATION
- 3.3 CHAMFERING
- 3.4 COATING
- 3.5 REMOVAL
  - 3.5.1 General
  - 3.5.2 Unsupported Concrete
- 3.6 FIELD QUALITY CONTROL

SECTION 03100

FORMWORK FOR CONCRETE

PART 1 GENERAL

1.1 SCOPE AND RELATED WORK

1.1.1 Scope

The work covered by this section consists of furnishing all material and equipment and performing all labor for formwork for concrete.

1.1.2 Related Work Specified Elsewhere

Requirements for concrete work as specified in other sections of DIVISION 3 -CONCRETE.

1.2 QUALITY CONTROL

The Contractor shall establish and maintain quality control for the work specified in this section to assure compliance with contract requirements and maintain records of his quality control for all construction operations including but not limited to the following:

(1) Materials

Conform to specification requirements.

(2) Installation

Conforms to specification requirements.

(3) Finish

Class of finish.

1.2.4 Submittals

Timeliness and accuracy.

A copy of these records and tests, as well as the records of corrective action taken, shall be furnished the Government.

1.3 APPLICABLE PUBLICATIONS

The following publications of the issues listed below, but referred to thereafter by basic designation only, form a part of this specification to the extent indicated by the references thereto:

AMERICAN CONCRETE INSTITUTE (ACI) STANDARD.

ACI 347-89	Formwork for Concrete Fifth Edition

U.S. DEPARTMENT OF COMMERCE, NATIONAL BUREAU OF STANDARDS (NBS) PRODUCT STANDARD.

PS 1-83	Construction and Industrial Plywood

1.4 SUBMITTALS

1.4.1 Shop Drawings

Detailed drawings for all formwork shall be submitted at least 30 days before either fabrication on site or before delivery of prefabricated forms. The drawings and data submitted shall include the type, size, quantity of all materials of which the forms are made, details affecting the appearance, and the assumed design values and loading conditions.

1.4.2 Manufacturer's Literature

Manufacturer's literature shall be submitted for plywood, form accessories, prefabricated forms, form coating, and form lining materials.

PART 2 PRODUCTS

2.1 MATERIALS

2.1.1 Forms

2.1.1.1 General

Forms shall be fabricated with facing materials that produce the specified construction tolerance requirements of Section 03300, paragraph 1.4.1 and the surface requirements of Section 03300, paragraph 1.4.2.

2.1.1.2 Class "B" Finish

This class of finish shall apply to all surfaces except those specified to receive Class D. The sheathing shall be composed of tongue-and-groove or shiplap lumber, plywood conforming to

NBS Product Standard PS 1, grade B-B concrete form, tempered concrete form hardboard, or steel. Steel lining on wood sheathing will not be permitted.

2.1.1.3 Class "D" Finish

This class of finish shall apply to all surfaces against which backfill will be placed. The sheathing may be of wood or steel.

2.1.2 Form Accessories

Ties and other similar form accessories to be partially or wholly embedded in the concrete shall be of a commercially manufactured type. After the ends or end fasteners have been removed, the embedded portion of metal ties shall terminate not less than 2 inches from any concrete surface wither exposed to view or exposed to water. Removable tie rods shall not be allowed. Plastic snap ties may be used in locations where the surface will not be exposed to view. Form ties shall be constructed so that the ends or end fasteners can be removed without spalling the concrete.

2.1.3 Form Coating

Form coating shall be commercial formulation that will not bond with, stain, cause deterioration, or any other damage to concrete surfaces. The coating shall not impair subsequent treatment of concrete surfaces depending upon bond or adhesion nor impede the wetting of surfaces to be cured with water or curing compounds. If special form liners are to be used, the Contractor shall follow the recommendation of the form coating manufacturer.

PART 3 EXECUTION

3.1 DESIGN

The design and engineering of the formwork, as well as its construction, shall be the responsibility of the Contractor. The formwork shall be designed for loads, lateral pressure and allowable stresses in accordance with Chapter 1 of ACI Standard 347. Forms shall have sufficient strength to withstand the pressure resulting from placement and vibration of the concrete and shall have sufficient rigidity to maintain specified tolerances.

3.2 INSTALLATION

Forms shall be mortar tight, properly aligned and adequately supported to produce concrete surfaces meeting the surface requirements of SECTION 03300, paragraph 1.4.2 and conforming to construction tolerances of SECTION 03300, paragraph 1.4.1. Where concrete surfaces are to be permanently exposed to view, joints in form panels shall be arranged to provide a pleasing appearance. Where forms for continuous surfaces are placed in successive units, care shall be taken to fit the forms over the completed surface so as to obtain accurate alignment of the surface and to prevent leakage of mortar. Forms shall not be re-used if there is any evidence of surface wear and tear or defects which would impair the quality of the

surface. All surfaces of forms and embedded materials shall be cleaned of any mortar from previous concreting and of all other foreign material before concrete is placed in them.

3.3 CHAMFERING

All exposed joints, edges and external corners shall be chamfered by molding placed in the forms unless the drawings specifically state that chamfering is to be omitted or as otherwise specified. Chamfered joints will not be permitted where earth or rockfill is placed in contact with concrete surfaces. Chamfered joints shall be terminated a sufficient distance outside the limit of the earth or rockfill so that the ends of the joints will be clearly visible.

3.4 COATING

Forms for exposed or painted surfaces shall be coated with form oil or a form-release agent before the form or reinforcement is placed in final position. The coating shall be used as recommended in the manufacturer's printed or written instructions. Forms for unexposed surfaces may be wet with water in lieu of coating immediately before placing concrete, except that in cold weather with probable freezing temperatures coating shall be mandatory. Surplus coating on form surfaces and coating on reinforcing steel and construction joints shall be removed before placing concrete.

3.5 REMOVAL

3.5.1 General

Forms shall not be removed without approval of the Contracting Officer and all removal shall be accomplished in a manner which will prevent injury to the concrete. Forms shall not be removed before the expiration of the minimum time indicated below, except as otherwise directed or specifically authorized. When conditions on the work are such as to justify the requirement, forms shall remain in place for a longer period. Form removal shall be scheduled so that all necessary repairs of concrete surfaces can be completed within 24 hours.

3.5.2 Unsupported Concrete

Formwork for vertical type forms not supporting the weight of concrete shall not be removed in less than 24 hours. The time depends on temperature, lift heights and type and amount of cementitious material in the concrete.

3.6 FIELD QUALITY CONTROL

Forms and embedded items shall be inspected in sufficient time prior to each concrete placement by the Contractor in order to certify to the Contracting Officer that they are ready to receive concrete. The results of each inspection shall be reported in writing.

** End of Section **

DIVISION 3 — CONCRETE

SECTION 03200

STEEL BARS AND ACCESSORIES FOR CONCRETE REINFORCEMENT

TABLE OF CONTENTS

PART 1 GENERAL
- 1.1 SCOPE
- 1.2 RELATED WORK SPECIFIED ELSEWHERE
- 1.3 APPLICABLE PUBLICATIONS
- 1.4 QUALITY CONTROL
- 1.5 QUALITY ASSURANCE
  - 1.5.1 General
  - 1.5.2 Reinforcement Steel Tests
- 1.6 SUBMITTLAS
  - 1.6.1 General
  - 1.6.2 Shop Drawings
    - 1.6.2.1 Steel Schedules
    - 1.6.2.2 Bar Supports
  - 1.6.3 Test Reports

PART 2 PRODUCTS
- 2.1 MATERIALS
  - 2.1.1 Steel Bars
  - 2.1.2 Accessories
    - 2.1.2.1 Bar Supports
    - 2.1.2.2 Wire Ties

PART 3 EXECUTION
- 3.1 PLACEMENT
  - 3.1.1 General
  - 3.1.2 Hooks and Bends
  - 3.1.3 Welding
  - 3.1.4 Placing Tolerances
    - 3.1.4.1 Spacing
    - 3.1.4.2 Concrete Cover
  - 3.1.5 Splicing
    - 3.1.5.1 General
    - 3.1.5.2 Lap Splices

SECTION 03200

STEEL BARS AND ACCESSORIES FOR CONCRETE REINFORCEMENT

PART 1 GENERAL

1.1 SCOPE

The work covered by this section consists of furnishing all equipment, materials, and labor for providing and placing steel bars and accessories for concrete reinforcement.

1.2 RELATED WORK SPECIFIED ELSEWHERE

Requirements for concrete work as specified in other sections of DIVISION 3 -CONCRETE.

1.3 APPLICABLE PUBLICATIONS

The following publications of the issues listed below, but referred to thereafter by basic designation only, form a part of this specification to the extent indicated by the references thereto:

AMERICAN CONCRETE INSTITUTE (ACI) STANDARDS.

ACI 315-80 (R 1986)	Details and Detailing of Concrete Reinforcement
ACI 318-95	Building Code Requirements for Reinforced Concrete

AMERICAN SOCIETY FOR TESTING AND MATERIALS (ASTM) STANDARDS.

A 370-94	Mechanical Testing of Steel Products
A 615/A615M-94	Deformed and Plain Billet-Steel Bars for Concrete Reinforcement

AMERICAN WELDING SOCIETY (AWS) CODE.

D1.4-79	Structural Welding Code Reinforcing Steel

1.4 QUALITY CONTROL

The Contractor shall establish and maintain quality control for the work specified in this section to assure compliance with contract requirements and maintain records of his quality control for all construction operations including but not limited to the following:

(1) Materials

Conform to specification requirements.

(2) Installation

Conforms to specification requirements.

1.4.3 Shop Drawings and Test Reports

Accuracy, detail, timeliness of submission.

A copy of these records and tests, as well as the records of corrective action taken, shall be furnished the Government.

1.5 QUALITY ASSURANCE

1.5.1 General

The Contractor shall have required material tests performed by an approved laboratory and certified to demonstrate that the materials are in conformance with the specifications. Tests shall be performed and certified at the Contractor's expense.

1.5.2 Reinforcement Steel Tests

Mechanical testing of steel shall be in accordance with ASTM A 370 except as otherwise specified herein or required by the material specifications. Tension tests shall be performed on full cross-section specimens, using a gage length that spans the extremities of specimens, with welds or sleeves included. The ladle analysis shall show the percentages of carbon, phosphorous, manganese, and sulfur present in the steel.

1.6 SUBMITTALS

1.6.1 General

The Contractor shall submit the following items to the Contracting Officer for approval:

1.6.2 Shop Drawings

Shop drawings shall be in accordance with specified requirements and include the following:

1.6.2.1 Steel Schedules

Reinforcement steel schedules showing quantity, size, shape, dimensions, and bending details.

1.6.2.2 Bar Supports

Details for bar supports showing types, sizes, spacing, and sequence.

1.6.3 Test Reports

Certified test reports of reinforcement steel showing that the steel complies with the applicable specifications shall be furnished for each steel shipment and identified with specific lots prior to placement.

PART 2 PRODUCTS

2.1 MATERIALS

2.1.1 Steel Bars

Billet-steel bars shall be deformed bars conforming to ASTM A 615, Grade 60, size and length as indicated on the drawings.

2.1.2 Accessories

2.1.2.1 Bar Supports

Bar supports shall conform to ACI 315. Bar supports for formed surfaces exposed to view or to be painted shall be plastic protected wire, or stainless steel.

2.1.2.2 Wire Ties

Wire ties shall be 16-gage or heavier black annealed wire.

PART 3 EXECUTION

3.1 PLACEMENT

3.1.1 General

Reinforcement steel and accessories shall be placed as specified and as shown on contract drawings and approved shop drawings. Placement details of steel and accessories not specified or shown on the drawings shall be in accordance with ACI 315 or ACI 318 or as directed by the Contracting Officer. Steel shall be fabricated to shapes and dimensions shown, placed where indicated within specified tolerances, and adequately supported during concrete placement. At the time of concrete placement all steel shall be free from loose, flaky rust, scale (except tight mill scale), mud, oil, grease, or any other coating that might reduce the bond with the concrete.

3.1.2 Hooks and Bends

Steel shall be mill bent unless otherwise noted on drawings. All steel shall be bent cold unless otherwise authorized by the Contracting Officer. No steel bars shall be bent after being partially embedded in concrete unless indicated on the drawings or otherwise authorized.

3.1.3 Welding

Welding of steel will be permitted only where indicated on the drawings or as otherwise directed by the Contracting Officer. Welding shall be performed in accordance with AWS D1.4, except where otherwise specified or indicated on the drawings.

3.1.4 Placing Tolerances

3.1.4.1 Spacing

The spacing between adjacent bars and the distance between layers may not vary from the indicated position by more than one bar diameter nor more than 1-inch.

3.1.4.2 Concrete Cover

The minimum concrete cover of main reinforcement steel shall be as shown on the drawings. The allowable variation for minimum cover shall be as follows:

MINIMUM COVER	VARIATION
4-inches	+ ¼-inch
3-inches	+ ¼-inch
2-inches	+ ¼-inch

3.1.5 Splicing

3.1.5.1 General

Splices in steel shall be made only as required. Bars may be spliced at alternate or additional locations at no additional cost to the Government, subject to the approval of the Contracting Officer.

3.1.5.2 Lap Splices

Lap splices may be used except as noted on the drawings. All lap splices shall be staggered. Lapped bars may be placed in contact and securely tied or spaced transversely apart to permit the embedment of the entire surface of each bar in concrete. Lapped bars shall not be spaced farther apart than one-fifth the required length of lap or 6-inches.

** End of Section **

DIVISION 3 — CONCRETE

SECTION 03300

CAST-IN-PLACE CONCRETE

TABLE OF CONTENTS

PART 1 GENERAL
1.1 SCOPE AND RELATED WORK SPECIFIED ELSEWHERE
1.1.1 Scope
1.1.2 Related Work Specified Elsewhere
1.2 APPLICABLE PUBLICATIONS
1.3 QUALITY CONTROL
1.4 EVALUATION AND ACCEPTANCE
1.4.1 Construction Tolerances
1.4.2 Surface Requirements
1.4.3 Appearance
1.5 SUBMITTALS
1.5.1 Test Reports
1.5.1.1 Concrete Mixture Proportions
1.5.1.2 Cement
1.5.2 Manufacturer's Certificates
1.5.2.1 Accelerating Admixture
1.5.2.2 Impervious Sheet Curing Materials
1.5.2.3 Air-Entraining Admixture
1.5.2.4 Water-Reducing Admixture
1.5.2.5 Curing Compound
1.5.3 Hot-Weather and Cold-Weather Requirements
1.5.3.1 Cold-Weather Requirements
1.5.3.2 Hot-Weather Requirements
1.6 QUALITY CONTROL

PART 2 PRODUCTS
2.1 MATERIALS
2.1.1 Cementitious Material
2.1.1.1 General
2.1.1.2 Portland Cement
2.1.2 Aggregates
2.1.3 Admixtures
2.1.3.1 General
2.1.3.2 Air-Entraining Admixture
2.1.3.3 Accelerating Admixture
2.1.3.4 Water Reducing or Retarding Admixtures
2.1.4 Curing Materials
2.1.4.1 Impervious Sheet Materials

2.1.4.2 Membrane-Forming Curing Compound
2.1.5 Water
2.1.6 Nonshrink Grout
2.2 JOINTS
2.2.1 Construction Joints
2.3 MIXTURE PROPORTIONING
2.3.1 Quality
2.3.1.1 Strength
2.3.1.2 Maximum Water-Cement Ratio
2.3.2 Nominal Maximum Size Coarse Aggregate
2.3.3 Air Content
2.3.4 Slump

PART 3 EXECUTION
3.1 PRODUCTION OF CONCRETE
3.1.1 Capacity
3.1.2 Batching Plant
3.1.2.1 General
3.1.2.2 Equipment
3.1.2.3 Scales
3.1.2.4 Batching Tolerances
3.1.2.4.1 Weighing Tolerances
3.1.2.4.2 Volumetric Tolerances
3.1.2.5 Moisture Control
3.1.3 Mixers
3.1.3.1 General
3.1.3.2 Concrete Plant Mixers
3.1.3.3 Truck Mixers
3.2 CONVEYING EQUIPMENT
3.2.1 General
3.2.2 Buckets
3.2.3 Transfer Hoppers
3.2.4 Trucks
3.2.5 Chutes
3.2.6 Pump Placement
3.3 PREPARATION FOR PLACING
3.3.1 Embedded Items
3.3.2 Concrete on Earth Foundations
3.3.3 Construction Joint Treatment
3.3.3.1 General
3.3.3.2 Cleaning
3.3.3.2.1 Air-Water Cutting
3.3.3.2.2 High-Pressure Water Jet
3.3.3.2.3 Sandblasting
3.3.3.2.4 Waste Disposal
3.4 PLACING

3.4.1 General
3.4.2 Time Interval Between Mixing and Placing
3.4.3 Cold-Weather Placing
3.4.4 Hot-Weather Placing
3.4.5 Consolidation
3.5 FINISHING
3.5.1 Unformed Surfaces
3.5.1.1 General
3.5.1.2 Hot Weather
3.5.1.3 Float Finish
3.5.2 Formed Surfaces
3.5.2.1 General
3.5.2.2 Repair of Surface Defects
3.6 CURING AND PROTECTION
3.6.1 General
3.6.2 Moist Curing
3.6.3 Membrane Curing
3.6.4 Impervious-Sheet Curing
3.6.5 Cold Weather

SECTION 03300

CAST-IN-PLACE CONCRETE

PART 1 GENERAL

1.1 SCOPE AND RELATED WORK SPECIFIED ELSEWHERE

1.1.1 Scope

The work covered by this section consists of furnishing all material and equipment and performing all labor for cast-in-place concrete except for related work specified in 1.1.2 below.

1.1.2 Related Work Specified Elsewhere

Requirements for concrete work as specified in other sections of DIVISION 3 CONCRETE.

1.2 APPLICABLE PUBLICATIONS

The following publications of the issues listed below, but referred to thereafter by basic designation only, form a part of this specification to the extent indicated by the references thereto:

AMERICAN SOCIETY FOR TESTING ANDMATERIALS (ASTM)

C 31-91a	Making and Curing Concrete Test Specimens in the Field
C 33-93	Concrete Aggregates
C 39-94 and Editorial Change 1	Compressive Strength of Cylindrical Concrete Specimens
C 94-94	Ready-Mixed Concrete
C143-90A	Slump of Hydraulic Cement Concrete
C 150-95	Portland Cement
C 171-92	Sheet Materials for Curing Concrete
C 172-90	Sampling Freshly Mixed Concrete
C 231-91b	Air Content of Freshly Mixed Concrete

	by the Pressure Method
C 260-94	Air-Entraining Admixtures for Concrete
C309-94	Liquid Membrane-Forming Compounds for Curing Concrete
C 494-92	Chemical Admixtures for Concrete
C 566-89	Total Moisture Content of Aggregate by Drying
C 1107-91a	Packaged Dry , Hydraulic-Cement Grout (Nonshrink)
D 75-87 (R 1992) and Editorial Cmt 1	Sampling Aggregates
E 329-93b	Agencies Engaged in the Testing and/or Inspection of Materials Used in Construction

CONCRETE PLANT MANUFACTURER'S BUREAU (CPMB)

Concrete Plant Standards (8th Rev., 1986 Prtg.)

U.S. DEPARTMENT OF COMMERCE, NATIONAL BUREAU OF STANDARDS (NBS) HANDBOOK

H44	Specifications, Tolerances, and Other Technical Requirements for Weighing and Measuring Devices (1986)

AMERICAN CONCRETE INSTITUTE (ACI)

ACI 305R-91	Hot Weather Concreting

1.3 QUALITY CONTROL

The Contractor will sample and test aggregates and concrete to determine compliance with the specifications. The Contractor shall provide facilities and labor as may be necessary for procurement of representative test samples. Testing and testing facilities shall be in accordance with SECTION 01471, paragraph 3.7.2. Samples of aggregates will be obtained at the point of batching in accordance with ASTM D 75. Concrete will be sampled in accordance with ASTM

C 172. Slump and air content will be determined in accordance with ASTM C 231. Compression test specimens will be made and laboratory cured in accordance with ASTM C 31 and compression test specimens tested in accordance with ASTM C 39.

1.4 EVALUATION AND ACCEPTANCE

1.4.1 Construction Tolerances

Variation in alignment, grade and dimensions of the structures from the established alignment, grade and dimensions shown on the drawings shall be minus ¼-inch and plus ½-inch.

1.4.2 Surface Requirements

The surface requirements for the classes of finish required by SECTION 03100, paragraph 2.1 shall be as hereinafter specified. Allowable irregularities are designated "abrupt" or "gradual" for purposes of providing for surface variations. Offsets resulting from displaced, misplaced or mismatched forms, or sheathing, or by loose knots in sheathing, or other similar form defects, shall be considered "abrupt" irregularities. Irregularities resulting from warping, unplaneness or similar uniform variations from planeness, or true curvature, shall be considered "gradual" irregularities. "Gradual" irregularities will be checked for compliance with the prescribed limits with a 5-foot template, consisting of a straightedge for plane surfaces and a shaped template for curved or warped surfaces. In measuring irregularities, the straightedge or template may be placed anywhere on the surface in any direction, with the testing edge held parallel to the intended surface.

	Maximum Irregularities	
Class of Finish	Abrupt, inches	Gradual, inches
B	¼	½
D	½	½

1.4.3 Appearance

Permanently exposed surfaces shall be cleaned, if stained or otherwise discolored, by a method which does not harm the concrete and which is approved by the Contracting Officer.

1.5 SUBMITTALS

1.5.1 Test Reports

1.5.1.1 Concrete Mixture Proportions

Concrete mixture proportions shall be determined by the Contractor and submitted for information only. The proportions of all ingredients and nominal maximum coarse aggregate size that will be used in the manufacture of the concrete shall be stated. Proportions shall

indicate weight of cement and water and weight of aggregates in a saturated surface-dry condition. The submission shall be accompanied by test reports from a testing laboratory meeting the prevalidation requirements of Section 01451 CONTRACTOR QUALITY CONTROL and complying with ASTM E 329 which show that proportions thus selected will produce concrete of the quality indicated. No substitution shall be made in the source or type of materials used in the work without additional tests to show that the new materials and quality of concrete are satisfactory. The water-cement ratio of the proposed mix shall not be exceeded.

1.5.1.2 Cement

Cement will be accepted on the basis of manufacturer's certification of compliance, accompanied by mill test reports that materials meet the requirements of the specification under which it is furnished. Certification and mill test reports shall identify the particular lot furnished. No cement shall be used until notice of acceptance has been given by the Contracting Officer. Cement will be subject to check testing from samples obtained at the mill, at transfer points or at the project site, as scheduled by the Contracting Officer, and such sampling will be by or under the supervision of the Government at its expense. Material not meeting specifications shall be promptly removed from the site of work.

1.5.2 Manufacturer's Certificates

1.5.2.1 Accelerating Admixture

Accelerating admixture shall be certified for compliance with all specification requirements.

1.5.2.2 Impervious Sheet Curing Materials

Impervious sheet curing materials shall be certified for compliance with all specification requirements.

1.5.2.3 Air-Entraining Admixture

Air-entraining admixture shall be certified for compliance with all specification requirements.

1.5.2.4 Water-Reducing Admixture

Water-reducing admixture shall be certified for compliance with all specification requirements.

1.5.2.5 Curing Compound

Curing compound shall be certified for compliance with all specification requirements.

1.5.3 Hot-Weather and Cold-Weather Requirements

1.5.3.1 Cold-Weather Requirements

If concrete is to be placed under cold weather conditions, a cold weather plan shall be submitted covering the proposed materials, methods and protection for approval by the Contracting Officer.

1.5.3.2 Hot-Weather Requirements

If concrete is to be placed under hot weather conditions, a hot weather plan shall be submitted covering the proposed materials and methods for approval by the Contracting Officer.

1.6 QUALITY CONTROL

The Contractor shall establish and maintain quality control for the work specified in this section to assure compliance with contract requirements and maintain records of his quality control for all construction operations including but not limited to the following:

(1) Materials

Conform to the specifications.

(2) Construction

Mixing, placing, finishing, curing, and protection.

A copy of these records and tests, as well as the records of corrective action taken, shall be furnished the Government.

PART 2 PRODUCTS

2.1 MATERIALS

2.1.1 Cementitious Material

2.1.1.1 General

Cementitious material shall be portland cement and shall conform to appropriate specifications listed in 2.1.1.2 below:

2.1.1.2 Portland Cement

ASTM C 150, Type I, II or III.

2.1.2 Aggregates

Fine and coarse aggregates shall conform to the applicable requirements of ASTM C 33. Coarse aggregate shall conform to grading requirements for sizes 467, 57 or 67, as appropriate. The nominal maximum coarse aggregate size shall be as listed in 2.3.2 below.

2.1.3 Admixtures

2.1.3.1 General

Admixtures to be used, when required or permitted, shall conform to the appropriate specification listed in 2.1.3.2, 2.1.3.3, and 2.1.3.4 below.

2.1.3.2 Air-Entraining Admixture

ASTM C 260; however, air-entraining admixture which has been in storage at the project site for longer than 6 months or which has been subjected to freezing shall not be used.

2.1.3.3 Accelerating Admixture

Accelerating admixture shall conform to the requirements as specified in ASTM C 494, type C.

2.1.3.4 Water Reducing or Retarding Admixtures

ASTM C 494, Type A, B or D.

2.1.4 Curing Materials

2.1.4.1 Impervious Sheet Materials

ASTM C 171, type optional except polyethylene film, if used, shall be white opaque.

2.1.4.2 Membrane-Forming Curing Compound

A pigmented type curing compound conforming to ASTM C 309 Type 2 may be used on surfaces which will not be exposed to view when the project is completed. A non-pigmented type curing compound, containing a fugitive dye, conforming to ASTM C 309 Type 1-d shall be used on surfaces which will be exposed to view when the project is completed.

2.1.5 Water

Water for mixing shall be fresh, clean, drinkable, and free of injurious amounts of oil, acid, salt and alkali.

2.1.6 Nonshrink Grout

Nonshrink grout shall conform to ASTM C 1107 and shall be a commercial formulation suitable for the application proposed.

2.2 JOINTS

2.2.1 Construction Joints

Construction joints shall be located as indicated or approved. Where concrete work is interrupted by weather, end of work shift, or other similar type of delay, location and type of construction joint shall be subject to approval of the Contracting Officer.

2.3 MIXTURE PROPORTIONING

2.3.1 Quality

2.3.1.1 Strength

Specified minimum compressive strength for cast-in-place concrete shall be 4,000 psi at 28 days.

2.3.1.2 Maximum Water-Cement Ratio

Maximum water-cement ratio shall be 0.55 by weight.

2.3.2 Nominal Maximum Size Coarse Aggregate

Nominal maximum size coarse aggregate shall be 1½ inches.

2.3.3 Air Content

Air content as determined by ASTM C 231 shall be 5.0 percent ± 1.5 percent, except that when nominal maximum size coarse aggregate is ¾-inch it shall be 6.0 percent ± 1.5 percent.

2.3.4 Slump

The slump shall be determined in accordance with ASTM C 143 and shall be within the range of 1-inch to 3-inches. Where placement by pump is approved, the slump shall not exceed 6-inches and shall remain within a 3-inch band.

PART 3 EXECUTION

3.1 PRODUCTION OF CONCRETE

3.1.1 Capacity

The batching, mixing and placing equipment shall have a capacity of at least 30 cubic yards per hour.

3.1.2 Batching Plant

3.1.2.1 General

The batching plant shall conform to the requirements of the Concrete Plant Standards of CPMB and as specified; however, rating plates attached to batch plant equipment are not required.

3.1.2.2 Equipment

The batching controls shall be automatic or manual. Separate bins or compartments shall be provided for each size group of aggregate and cement. Aggregate shall be weighed either in separate weigh batchers with individual scales or cumulatively in one weigh batcher on one scale. Aggregate shall not be weighed in the same batcher with cement. If measured by weight, water shall not be weighed cumulatively with another ingredient. Water batcher filling and discharging valves shall be so interlocked that the discharge valve cannot be opened before the filling valve is fully closed. An accurate mechanical device for measuring and dispensing each admixture shall be provided. Each dispenser shall be interlocked with the batching and discharging operation of the water so that each admixture is separately batched and discharged automatically in a manner to obtain uniform distribution throughout the batch in the specified mixing period. Where use of truck mixers makes this requirement impracticable, the admixture dispensers shall be interlocked with the sand batcher. Admixtures will not be combined prior to introduction in water or sand. The plant shall be arranged so as to facilitate the inspection of all operations at all times. Suitable facilities shall be provided for obtaining representative samples of aggregates from each bin or compartment.

3.1.2.3 Scales

The weighing equipment shall conform to the applicable requirements of NBS Handbook 44, except that the accuracy shall be plus or minus 0.2 percent of scale capacity. The Contractor shall provide standard test weights and any other auxiliary equipment required for checking the operating performance of each scale or other measuring device. Scales and other measuring devices shall be tested for accuracy in the presence of a representative of the Contracting Officer prior to batching; however, a certified test report performed by an approved testing company within the past year will be accepted in lieu of the above test.

3.1.2.4 Batching Tolerances

3.1.2.4.1 Weighing Tolerances

Whichever of the following tolerances is greater shall apply, based on required scale reading.

Material	Percent of Required Weight
Cementitious Materials	0-/+2

Aggregate	±2
Water	±1
Admixture	0-/+6

3.1.2.4.2 Volumetric Tolerances

For volumetric batching equipment the following tolerances shall apply to the required volume of material being batched:

Water:	Plus or minus 1 percent.
Admixtures:	Plus or minus 3 percent.

3.1.2.5 Moisture Control

The plant shall be capable of ready adjustment to compensate for the varying moisture contents of the aggregates, and to change the weights of the materials being batched. The Contractor shall perform at least one moisture content test on each type of aggregate each day that concrete is placed. Additional tests shall be performed by the Contractor if so directed by the Contracting Officer. Tests shall be performed in accordance with ASTM C 566.

3.1.3 Mixers

3.1.3.1 General

The mixers shall not be charged in excess of the capacity recommended by the manufacturer. The mixers shall be operated at the drum or mixing blade speed designated by the manufacturer. The mixers shall be maintained in satisfactory operating condition, and the mixer drums shall be kept free of hardened concrete. Should any mixer at any time produce unsatisfactory results, its use shall be promptly discontinued until it is repaired.

3.1.3.2 Concrete Plant Mixers

Concrete plant mixers shall be tilting, non-tilting, horizontal-shaft or vertical-shaft type and shall be provided with an acceptable device to lock the discharge mechanism until the required mixing time has elapsed. The mixing time shall conform to 3.1.3.3 below.

3.1.3.3 Truck Mixers

Truck mixers, the mixing of concrete therein, and concrete uniformity, shall conform to the requirements of ASTM C 94. A truck mixer may be used either for complete mixing (transit-mixed) or to finish the partial mixing done in a stationary mixer (shrink-mixed). Each truck shall be equipped with two counters from which it will be possible to determine the number of revolutions at mixing speed and the number of revolutions at agitating speed.

3.2 CONVEYING EQUIPMENT

3.2.1 General

Concrete shall be conveyed from mixer to forms as rapidly as practicable and within the time interval in 3.4.2 below by methods which will prevent segregation or loss of ingredients. Any concrete transferred from one conveying device to another shall be passed through a hopper which is conical in shape and shall not be dropped vertically more than 5-feet, except where suitable equipment is provided to prevent segregation and where specifically authorized. Telephonic or other satisfactory means of rapid communication between the mixing plant and the forms in which concrete is being placed shall be provided and available for use by Government inspectors.

3.2.2 Buckets

The interior hopper slope shall be not less than 58 degrees from the horizontal, the minimum dimension of the clear gate opening shall be at least 5 times the nominal maximum size aggregate and the area of the gate opening shall be not less than 288 square inches. The maximum dimension of the gate opening shall not be greater than twice the minimum dimension. The bucket gates shall be essentially grout tight when closed and may be manually, pneumatically or hydraulically operated, except that buckets larger than 2.5 cubic yards shall not be manually operated. The design of the bucket shall provide means for positive regulation of the amount and rate of deposit of concrete in each dumping position.

3.2.3 Transfer Hoppers

Concrete may be charged into non-agitating hoppers for transfer to other conveying devices. Transfer hoppers shall be capable of receiving concrete directly from delivery vehicles, and have conical-shaped discharge features. The machine shall be equipped with a hydraulically-operated gate and with a means of external vibration to effect complete and facile discharge. Concrete shall not be held in non-agitating transfer hoppers more than 30 minutes.

3.2.4 Trucks

Truck mixers operating at agitating speed or truck agitators used for transporting plant-mixed concrete shall conform to the requirements of ASTM C 94. Non-agitating equipment may be used for transporting plant-mixed concrete over a smooth road when hauling time is less than 15 minutes. Bodies of non-agitating equipment shall be smooth, watertight, metal containers equipped with gates that will permit the discharge of the concrete.

3.2.5 Chutes

When concrete can be placed directly from a truck mixer, agitator or non-agitating equipment, the chutes attached to this equipment may be used. A discharge deflector shall be used when required by the Contracting Officer. Separate chutes and other similar equipment will not be permitted for conveying concrete except when specifically approved.

3.2.6 Pump Placement

Concrete may be conveyed by positive displacement pump when approved by the Contracting Officer. The pumping equipment shall be piston or squeeze pressure type. The pipeline shall be rigid steel pipe or heavy duty flexible hose. The inside diameter of the pipe shall be at least three times the nominal maximum size coarse aggregate in the concrete mixture to be pumped but not less than 4-inches. The maximum size coarse aggregate will not be reduced to accommodate the pumps. The distance to be pumped shall not exceed limits recommended by the pump manufacturer. The concrete shall be supplied to the concrete pump continuously. When pumping is completed, concrete remaining in the pipeline shall be ejected without contamination of concrete in place. After each operation, equipment shall be thoroughly cleaned, and flushing water shall be wasted outside of the forms.

3.3 PREPARATION FOR PLACING

3.3.1 Embedded Items

Before placing concrete, care shall be taken to determine that all embedded items are firmly and securely fastened in place as indicated on the drawings, or required. Embedded items shall be free of oil and other foreign matter such as loose coatings or rust, paint and scale. The embedding of wood in concrete will be permitted only when specifically authorized or directed. Voids in sleeves, inserts and anchor slots shall be filled temporarily with readily removable materials to prevent the entry of concrete into voids.

3.3.2 Concrete on Earth Foundations

Earth surfaces upon which concrete is to be placed shall be clean, damp, and free from frost, ice, and standing or running water. Prior to placing concrete the earth foundation shall have been compacted to the satisfaction of and approved by the Contracting Officer.

3.3.3 Construction Joint Treatment

3.3.3.1 General

Concrete surfaces to which other concrete is to be bonded shall be prepared for receiving the next lift or adjacent concrete by cleaning with either air-water cutting, sandblasting, high pressure water jet, or other approved method; however, only approved wet sandblasting equipment shall be provided for wet sandblasting operations.

3.3.3.2 Cleaning

3.3.3.2.1 Air-Water Cutting

Air-water cutting of a construction joint shall be performed at the proper time and only on horizontal construction joints. The surface shall be cut with an air-water jet to remove all laitance and to expose clean, sound fine aggregate, but not so as to undercut the edges of the larger particles of aggregate. The air pressure used in the jet shall be 10 psi plus or minus 1 psi,

and the water pressure shall be just sufficient to bring the water into effective influence of the air pressure. When approved by the Contracting Officer, a retarder complying with the requirements of CRD C 94 may be applied to the surface of the lift in order to prolong the period of time during which air-water cutting is effective. Prior to receiving approval, the Contractor shall furnish samples of the material to be used and shall demonstrate the method to be used in applications. After cutting, the surface shall be washed and rinsed as long as there is any trace of cloudiness of the wash water. The surface shall again be washed just prior to placing the succeeding lift. Where necessary to remove accumulated laitance, coatings, stains, debris, and other foreign material, sandblasting will be required as the last operation before placing the next lift.

3.3.3.2.2 High-Pressure Water Jet

A stream of water under a pressure of not less than 3000 PSI may be used for cleaning. Its use shall be delayed until the concrete is sufficiently hard so that only the surface skin or mortar is removed and there is no undercutting of coarse aggregate particles. Where the cleaning occurs more than two days prior to placing the next lift or where the work in the area subsequent to the cleaning causes dirt or debris to be deposited on the surface, the surface shall be cleaned again as the last operation prior to placing the next lift. If the water jet is incapable of a satisfactory cleaning, the surface shall be cleaned by sandblasting.

3.3.3.2.3 Sandblasting

When employed in the preparation of construction joints, sandblasting shall be performed as the final operation completed before placing the following lift. The operation shall be continued until all accumulated laitance, coatings, stains, debris, and other foreign materials are removed. The surface of the concrete shall then be washed thoroughly to remove all loose materials. The surface shall again be washed just prior to placing the succeeding lift.

3.3.3.2.4 Waste Disposal

The method used in disposing of waste water employed in cutting, washing and rinsing of concrete surfaces shall be such that the waste water does not stain, discolor, or affect exposed surfaces of the structures, or damage the environment of the project area. Method of disposal shall be subject to approval by the Contracting Officer.

3.4 PLACING

3.4.1 General

Concrete placement will not be permitted when, in the opinion of the Contracting Officer, weather conditions prevent proper placement and consolidation. Concrete shall be deposited as close as possible to its final position in the forms, and in so depositing there shall be no vertical drop greater than 5 feet. Depositing of the concrete shall be so regulated that it may be effectively consolidated in horizontal layers 18-inches or less in thickness with a minimum of lateral movement. The amount deposited in each location shall be that which can be readily

and thoroughly consolidated. The surfaces of construction joints shall be kept continuously wet for the first twelve hours during the twenty-four hour period prior to placing concrete. Free water shall be removed prior to placement of concrete. Sufficient placing capacity shall be provided so that concrete placement can be kept plastic and free of cold joints while concrete is being placed.

3.4.2 Time Interval Between Mixing and Placing

Concrete shall be placed within 30 minutes after discharge into nonagitating equipment. When concrete is truck-mixed or when a truck mixer or agitator is used for transporting concrete mixed by a concrete plant mixer, the concrete shall be delivered to the site of the work, and discharge shall be completed within 1-1/2 hours. In hot weather or under conditions contributing to quick stiffening of the concrete, or when the temperature of the concrete is 85 degrees F or above, the discharge shall not exceed 45 minutes unless an approved retarding admixture is used. When the length of haul makes it impossible to deliver truck-mixed concrete within these time limits, batching of cement and a portion of the mixing water shall be delayed until the truck mixer is at or near the construction site. Not more than 80 percent of the water and all other materials except cement shall be batched at the distant batch plant and transported to the cement batcher without mixing.

3.4.3 Cold-Weather Placing

Concrete shall not be placed without a procedure approved in accordance with 1.5.3.1 above when the concrete is likely to be subjected to freezing temperatures before the expiration of the curing period. The ambient temperature of the space adjacent to the concrete placement and surfaces to receive concrete shall be above 32 degrees F. The placing temperature of the concrete having a minimum dimension less than 12-inches shall be between 60 degrees F and 75 degrees F.

The placing temperature of the concrete having a minimum dimension greater than 12-inches shall be between 50 degrees F and 75 degrees F. Heating of the mixing water or aggregates will be required to regulate the concrete placing temperatures. Materials entering the mixer shall be free from ice, snow or frozen lumps. Salt, chemicals or other materials shall not be mixed with the concrete to prevent freezing, except that calcium chloride may be used as an accelerator.

3.4.4 Hot-Weather Placing

Concrete shall be properly placed and finished with approved procedures in accordance with 1.5.3.2 above. The concrete placing temperature shall not exceed 85 degrees F. Cooling of the mixing water and/or aggregates will be required to obtain an adequate placing temperature. An approved retarder may be used to facilitate placing and finishing. Steel forms and reinforcement shall be cooled prior to concrete placement when steel temperatures are greater than 120 degrees F. Conveying and placing equipment shall be cooled if necessary to maintain proper concrete placing temperature.

3.4.5 Consolidation

Immediately after placing, each layer of concrete shall be consolidated by internal vibrating equipment. Vibrators will not be used to transport concrete within the forms. Hand spading may be required if necessary with internal vibration along formed surfaces permanently exposed to view. Form or surface vibrators shall not be used unless specifically approved. Vibrators of the proper size, frequency and amplitude shall be used for the type of work being performed in conformance with the following requirements:

Application	Head Diameter (Inches)	Frequency VPM	Amplitude (Inches)
General Construction	2 - 3½	8000 - 12000	0.0004 - .001

The frequency and amplitude shall be within the range indicated in the table above. The vibrator shall be inserted vertically at uniform spacing over the entire area of placement. The distance between insertions shall be approximately 1-1/2 times the radius of action of the vibrator. The vibrator shall penetrate rapidly to the bottom of the layer and at least 6-inches into the preceding layer if such exists. It shall be held stationary until the concrete is consolidated and then withdrawn slowly.

3.5 FINISHING

3.5.1 Unformed Surfaces

3.5.1.1 General

The ambient temperature of spaces adjacent to surfaces being finished shall be not less than 50 degrees F. All unformed surfaces that are not to be covered by additional concrete or backfill shall have a float finish, unless a steel trowel finish is specified, and shall be true to the elevations shown on the drawings. Surfaces to receive additional concrete or backfill shall be brought to elevation shown on the drawings and left true and regular. Exterior surfaces shall be sloped for drainage unless otherwise shown on the drawings or as directed. Joints shall be carefully made with a jointing or edging tool. The finished surfaces shall be protected from stains or abrasions.

3.5.1.2 Hot Weather

In hot weather when the rate of evaporation of surface moisture, as determined by use of Figure 2.1.5 of ACI 305, may reasonably be expected to exceed 4.8 pounds per square feet per hour, provision for windbreaks, shading, fog spraying, or wet covering with a light colored material shall be made in advance of placement, and such protective measures shall be taken as quickly as finishing operations will allow.

3.5.1.3 Float Finish

Surfaces shall be screeded and darbied or bullfloated to bring the surface to the required finish level with no coarse aggregate visible. No cement or mortar shall be added to the surface during the finishing operation. The concrete, while still green but sufficiently hardened to bear a man's weight without deep imprint, shall be floated to a true and even plane. Floating may be performed by use of hand or power driven equipment. Hand floats shall be made of magnesium or aluminum. Tolerance for a floated finish shall be true plane within ⅛ inch in 10 feet as determined by a 10 foot straight-edge placed anywhere on the slab in any direction.

3.5.2 Formed Surfaces

3.5.2.1 General

Surfaces, unless other type of finish is specified, shall be left with the texture imparted by the forms except defective surfaces shall be repaired as described in 3.5.2.2 below. Unless painting of surfaces is required, uniform color shall be maintained by use of only one mixture without changes in materials or proportions for any structure or portion of structure which is exposed to view or on which a special finish is required. Forms shall not be reused if there is any evidence of surface wear or defects which would impair the quality of the surface.

3.5.2.2 Repair of Surface Defects

After form removal, all fins and loose materials shall be removed. All voids, and honeycombs exceeding ½ inch diameter and all tie rod holes permanently exposed to view shall be reamed or chipped and filled with dry pack mortar. Defective areas larger than 2 square inches in any surface, permanently exposed or not, shall be delineated in a rectangular shape by a saw cut a minimum depth of 1 inch and repaired with concrete replacement. The cement used in the mortar or concrete for all surfaces permanently exposed to view shall be a blend of portland cement and white cement properly proportioned so that the final color when cured will be the same as adjacent concrete. Temperature of the concrete, ambient air, replacement concrete or mortar during remedial work including curing shall be above 50 degrees F. The prepared area shall be dampened, brush-coated with a neat cement grout or with an approved epoxy resin, and filled with mortar or concrete. The mortar shall consist of 1 part cement to 2½ parts fine aggregate. The quantity of mixing water shall be the minimum necessary to obtain a uniform mixture and permit placing. Mortar shall be thoroughly compacted in place and struck off to adjacent concrete. Replacement concrete shall be drier than the usual mixture and thoroughly tamped into place and finished. Forms shall be used if required. Metal tools shall not be used to finish permanently exposed surfaces. The patched areas shall be cured for seven days.

3.6 CURING AND PROTECTION

3.6.1 General

All concrete shall be cured by an approved method for a period of 7 days. Immediately after placement, concrete shall be protected from premature drying, extremes in temperature, rapid temperature change, and mechanical injury. All materials and equipment needed for adequate curing and protection shall be available and at the placement site prior to start of concrete

placement. Concrete shall be protected from the damaging effects of rain for 12 hours and flowing water for 14 days. No fire or excessive heat shall be permitted near or in direct contact with concrete at any time.

3.6.2 Moist Curing

Concrete moist-cured shall be maintained continuously wet for the entire curing period. If water or curing materials used stain or discolor concrete surfaces which are to be permanently exposed, they shall be cleaned as required in 1.4.3 above. When wooden form sheathing is left in place during curing, the sheathing shall be kept wet at all times. Horizontal surfaces shall be cured by ponding, by covering with a minimum uniform thickness of 2-inches continuously saturated sand, or by covering with saturated nonstaining burlap or cotton mats or sealed impervious sheet materials. Horizontal construction joints may be allowed to dry for 12 hours immediately prior to placing of the following lift.

3.6.3 Membrane Curing

Concrete may be cured with an approved curing compound in lieu of moist curing except that membrane curing will not be permitted on any surface containing protruding steel reinforcement.

A pigmented type curing compound conforming to ASTM C 309 Type 2 may be used on surfaces which will not be exposed to view when the project is completed. A non-pigmented type curing compound, containing a fugitive dye, conforming to ASTM C 309 Type 1-d shall be used on surfaces which will be exposed to view when the project is completed. In hot weather, concrete cured with the non-pigmented type shall be shaded from the direct rays of the sun for the first 3 days of the curing period.

The curing compound shall be applied to formed surfaces immediately after the forms are removed and all necessary repairs have been performed. Immediately after the removal of forms, all surfaces shall be kept continuously wet until repairs have been performed and curing compound applied. The surfaces shall be thoroughly moistened with water and the curing compound applied as soon as free water disappears. The curing compound shall be applied to unformed surfaces as soon as free water has disappeared. The curing compound shall be applied in a 2-coat continuous operation by approved motorized power-spraying equipment and at a uniform coverage of not more than 28 square feet per gallon for each coat. Concrete surfaces which have been subjected to rainfall within 3 hours after curing compound has been applied shall be resprayed by the method and at the coverage herein specified. All concrete surfaces on which the curing compound has been applied shall be adequately protected for the duration of the entire curing period from pedestrian and vehicular traffic and from any other cause which will disrupt the continuity of the curing membrane.

3.6.4 Impervious-Sheet Curing

Horizontal or near horizontal surfaces may be cured using impervious sheets. All surfaces shall be thoroughly wetted and be completely covered with waterproof paper, polyethylene film or

with polyethylene-coated burlap having the burlap thoroughly water-saturated before placing. Covering shall be laid with light colored side up. Covering shall be lapped not less than 12-inches and securely weighted down or shall be lapped not less than 4-inches and taped to form a continuous cover with completely closed joints. The sheet shall be weighted to prevent displacement so that it remains in contact with the concrete during the specified length of curing. Coverings shall be folded down over exposed edges of slab and secured by approved means. Sheets shall be immediately repaired or replaced if tears or holes appear during the curing period.

3.6.5 Cold Weather

When the daily outdoor low temperature is less than 32 degrees F, the temperature of the concrete shall be maintained above 40 degrees F for at least the first three days and above 32 degrees F for the remainder of the required curing period. In addition, during the period of protection removal, the air temperature adjacent to the concrete surfaces shall be controlled so that concrete near the surface will not be subjected to a temperature differential of more than 57 degrees F as determined by observation of ambient and concrete temperatures indicated by suitable thermometers furnished by the Contractor as required and installed adjacent to the concrete surface and 2-inches inside the surface of the concrete. The installation of the thermometers shall be made by the Contractor at such locations as may be directed. Curing compounds shall not be used on concrete surfaces which are maintained at curing temperature by use of free steam.

** End of Section **

DIVISION 3 — CONCRETE

SECTION 03304

PRESSURE GROUTING

TABLE OF CONTENTS

PART 1 GENERAL
- 1.1 SCOPE
- 1.2 REFERENCES
- 1.3 SUBMITTALS

PART 2 PRODUCTS
- 2.1 MATERIALS
  - 2.1.1 Portland Cement
  - 2.1.2 Pozzolan
  - 2.1.3 Grout Fluidifier
  - 2.1.4 Water
  - 2.1.5 Sand
- 2.2 EQUIPMENT

PART 3 EXECUTION
- 3.1 PIPE AND STRUCTURE PREPARATION
- 3.2 GROUP PLACEMENT
- 3.3 GROUT TESTING
  - 3.3.1 Flow Cone Test
  - 3.3.2 Grout Specimens for Laboratory Tests

SECTION 03304

PRESSURE GROUTING

PART 1 GENERAL

1.1 SCOPE

The work covered by this section consists of furnishing all plant, labor, equipment, and materials, and performing operations in connection with the construction of pressure grouting shown on the contract drawings and specified herein.

1.2 REFERENCES

The publications listed below form a part of this specification to the extent referenced. The publications are referred to in the text by basic designation only.

AMERICAN SOCIETY FOR TESTING AND MATERIALS (ASTM)
WITH CORRESPONDING CRD STANDARD INDICATED WHERE AVAILABLE.

ASTM C 109	(1995) Compressive Strength of Hydraulic Cement Mortars (Using 2-in. Cube Specimens)
ASTM C 150	(1995) Portland Cement
ASTM C 618	(1994a) Coal Fly Ash and Raw or Calcined Natural Pozzolan for use as a Mineral Admixture in Portland Cement Concrete
ASTM C 937	(1980; R 1991) Grout Fluidifier for Preplaced-Aggregate Concrete
ASTM C 939	(1994A) Flow or Grout for Preplaced-Aggregate Concrete (Flow Cone Method)

1.3 SUBMITTALS

Government approval is required for submittals with a “GA” designation; submittals having an “FIO” designation are for information only. The following shall be submitted in accordance with Section 01300 — SUBMITTAL PROCEDURES:

SD-08 Statement

Grouting Plan; FIO.

A grouting plan to detail the proposed method of operations, including the equipment, the materials, grout placement, procedure for minimizing/eliminating voids and a procedure for monitoring the filling of the culvert.

PART 2 PRODUCTS

2.1 MATERIALS

Grout shall consist of a mixture of portland cement, fly ash material when approved, fluidifier, sand and water proportioned and mixed to produce a grout capable of being pumped with an ultimate compressive strength of 2500 psi at 28 days. The Contractor shall provide the mix design to meet the compressive strength requirement. Other admixtures shall not be used.

2.1.1 Portland Cement

Portland cement shall conform to ASTM C 150.

2.1.2 Pozzolan

Pozzolan shall be a Class C fly ash material conforming to ASTM C 618. If the Contractor elects to use fly ash, fly ash shall be substituted for Portland Cement on a pound per pound basis up to 20% of total cementatious material by weight.

2.1.3 Grout Fluidifier

Grout fluidifier shall conform to ASTM C 937, except that expansion shall not exceed 4 percent. The fluidifier shall be a compound possessing characteristics which will increase the flowability of the mixture, assist in the dispersal of cement grains, and neutralize the setting shrinkage of the high-strength cement mortar.

2.1.4 Water

Water shall be fresh, clean, and free from sewage, oil, acid, alkali, salts, or organic matter.

2.1.5 Sand

The sand shall have a fineness modulus of not less than 1.30 nor more than 2.10. Sand grading shown above may be modified with the approval of the Contracting Officer. Mortar test specimens made with the modified sand shall exhibit compressive strength equal to or greater than that exhibited by similar specimens made with sand meeting grading and other requirements shown above.

2.2 EQUIPMENT

Grout pump shall be a positive displacement pump. The pump discharge capacity shall be calibrated in a convenient manner to determine the amount of grout being pumped into the culvert. All oil or other rust inhibitors shall be removed from mixing drums and pressure grout pumps prior to mixing and pumping. Contractor shall provide total volume of grout pumped to the Contracting Officer.

PART 3 EXECUTION

3.1 PIPE AND STRUCTURE PREPARATION

The existing pipe shall be thoroughly cleaned of any debris, sticks, mud and other material to permit the pipe to be completely filled with grout such that there would be no voids within the pipe. The inlet end of the pipe shall be sealed to prevent the inflow of water during the grouting sequence. A vent pipe shall be provided for the pipe to be grouted to allow for the venting of air during the grouting process.

3.2 GROUT PLACEMENT

Grout shall be placed in the existing pipe to remain as shown on the contract drawings and as may be specified in these specifications. Placement shall be performed using a pump as specified.

3.3 GROUT TESTING

3.3.1 Flow Cone Test

The quantity of water used shall be such as to produce a grout having a consistency of not less than 21 seconds when tested with a flow cone in accordance with ASTM C 939.

3.3.2 Grout Specimens for Laboratory Tests

Grout tests shall be conducted in accordance with ASTM C 109 in a laboratory, approved by the Contracting Officer. Test specimens shall be prepared by pouring grout into 2 by 2 by 2 inch cube molds. Not less than nine cubes shall be cast during each 8-hour shift. Three cubes shall be tested at 7 days; three at 28 days; and three at 90 days.

** End of Section **

DIVISION 4 – MASONRY

(NOT USED)

DIVISION 5 – METALS

SECTION 05120

STRUCTURAL STEEL AND MISCELLANEOUS METALS

TABLE OF CONTENTS

PART 1 GENERAL
- 1.1 REFERENCES
- 1.2 GENERAL REQUIREMENTS
- 1.3 SUBMITTALS
- 1.4 STORAGE
- 1.5 WELDING INSPECTOR
- 1.6 ACCESS BRIDGE

PART 2 PRODUCTS
- 2.1 STRUCTURAL STEEL
  - 2.1.1 Carbon Grade Steel
- 2.2 STEEL PIPE
- 2.3 HIGH STRENGTH BOLTS AND NUTS
- 2.4 CARBON STEEL BOLTS AND NUTS
- 2.5 NUTS AND DIMENSIONAL STYLE
- 2.6 WASHERS
- 2.7 FABRIC
- 2.8 GATE
- 2.9 PADLOCK
- 2.10 HANDRAILS
- 2.11 GRATING
- 2.12 ANCHOR BOLTS
- 2.13 ACCESSORIES

PART 3 EXECUTION
- 3.1 FABRICATION
- 3.2 ERECTION
  - 3.2.1 Connections
  - 3.2.2 Base Plates and Bearing Plates
  - 3.2.3 Chain-Link Fabric
  - 3.2.4 Razor Wire
  - 3.2.5 Gate

SECTION 05120

STRUCTURAL STEEL AND MISCELLANEOUS METALS

PART 1 GENERAL

1.1 REFERENCES

The publications listed below form a part of this specification to the extent referenced. The publications are referred to in the text by basic designation only.

AMERICAN INSTITUTE OF STEEL CONSTRUCTION (AISC)

AISC FCD	(1995a) Quality Certification Program Description
AISC ASD Manual	(1989) Manual of Steel Construction Allowable Stress Design
AISC ASD/LRFD Vol II	(1992) Manual of Steel Construction Vol II: Connections
AISC Design Guide No. 10	(1989) Erection Bracing of Low-Rise Structural Steel Frames
AISC LRFD Vol I	(1995) Manual of Steel Construction Load & Resistance Factor Design, Vol I: Structural Members, Specifications & Codes
AISC LRFD Vol II	(1995) Manual of Steel Construction Load & Resistance Factor Design, Vol II: Structural Members, Specifications & Codes
AISC Pub No. S303	(1992) Code of Standard Practice for Steel Buildings and Bridges

AMERICAN SOCIETY FOR TESTING AND MATERIALS (ASTM)

ASTM A 6	(1998a) General Requirements for Rolled Structural Steel Bars, Plates, Shapes, and Sheet Piling
ASTM A 36	(1997a) Carbon Structural Steel
ASTM A 53	(1999) Pipe, Steel, Black and Hot-Dipped, Zinc-Coated, Welded and Seamless

ASTM A 242	(1998) High-Strength Low-Alloy Structural Steel
ASTM A 307	(1997) Carbon Steel Bolts and Studs, 60 000 PSI Tensile Strength
ASTM A 325	(1997) Structural Bolts, Steel, Heat Treated, 120/105 ksi Minimum Tensile Strength
ASTM A 490	(1997) Heat-Treated Steel Structural Bolts, 150 ksi Minimum Tensile Strength
ASTM A 500	(1999) Cold-Formed Welded and Seamless Carbon Steel Structural Tubing in Rounds and Shapes
ASTM A 501	(1999) Hot-Formed Welded and Seamless Carbon Steel Structural Tubing
ASTM A 502	(1993) Steel Structural Rivets
ASTM A 514	(1994a) High-Yield-Strength, Quenched and Tempered Alloy Steel Plate, Suitable for Welding
ASTM A 529	(1996) High-Strength Carbon-Manganese Steel of Structural Quality
ASTM A 563	(1997) Carbon and Alloy Steel Nuts
ASTM A 572	(1999) High-Strength Low-Alloy Columbium-Vanadium Structural Steel
ASTM A 588	(1997) High-Strength Low-Alloy Structural Steel with 50 ksi (345 MPa) Minimum Yield Point to 4 in. (100 mm) Thick
ASTM A 618	(1999) Hot-Formed Welded and Seamless High-Strength Low-Alloy Structural Tubing
ASTM A 709	(1997a) Carbon and High-Strength Low-Alloy Structural Steel Shapes, Plates, and Bars and Quenched-and-Tempered Alloy Structural Steel Plates for Bridges
ASTM A 852	(1997) Quenched and Tempered Low-Alloy Structural Steel Plate with 70 ksi (485 MPa) Minimum Yield Strength to 4 in. (100 mm) Thick
ASTM A 992	(1998e1) Steel for Structural Shapes For Use in Building Framing

ASTM F 436	(1993) Hardened Steel Washers
ASTM F 844	(1998) Washers, Steel, Plain (Flat), Unhardened for General Use
ASTM F 959	(1999) Compressible-Washer-Type Direct Tension Indicators for Use with Structural Fasteners

AMERICAN SOCIETY OF MECHANICAL ENGINEERS (ASME)

ASME B18.21.1	(1994) Lock Washers (Inch Series)
ASME B46.1	(1995) Surface Texture (Surface Roughness, Waviness, and Lay)

AMERICAN WELDING SOCIETY (AWS)

AWS A2.4	(1998) Standard Symbols for Welding, Brazing and Nondestructive Examination
AWS D1.1	(1998) Structural Welding Code - Steel

STEEL STRUCTURES PAINTING COUNCIL (SSPC)

SSPC Paint 25	(1991) Red Iron Oxide, Zinc Oxide, Raw Linseed Oil and Alkyd Primer (without Lead and Chromate Pigments)

1.2 GENERAL REQUIREMENTS

Structural steel and miscellaneous metal fabrication and erection shall be performed by an organization experienced in structural steel work of equivalent magnitude. The Contractor shall be responsible for correctness of detailing, fabrication, and for the correct fitting of structural members. Connections, for any part of the structure not shown on the contract drawings, shall be considered simple shear connections and shall be designed and detailed in accordance with pertinent provisions of AISC ASD Manual. Substitution of sections or modification of connection details will not be accepted unless approved by the Contracting Officer. AISC ASD Manual shall govern the work. Welding shall be in accordance with AWS D1.1. High-strength bolting shall be in accordance with AISC ASD Manual.

1.3 SUBMITTALS

Government approval is required for submittals with a "GA" designation; submittals having an "FIO" designation are for information only. The following shall be submitted in accordance with Section 01300 SUBMITTAL PROCEDURES:

SD-04 Drawings

Structural Steel System; FIO. Structural Connections; FIO.

Shop and erection details including members (with their connections) not shown on the contract drawings. Welds shall be indicated by standard welding symbols in accordance with AWS A2.4.

SD-08 Statements

Erection; FIO.

Prior to erection, erection plan of the structural steel framing describing all necessary temporary supports, including the sequence of installation and removal.

Welding; FIO.

WPS prequalified.

SD-13 Certificates

Mill Test Reports; FIO.

Certified copies of mill test reports for structural steel, structural bolts, nuts, washers and other related structural steel items, including attesting that the structural steel furnished contains no less than 25 percent recycled scrap steel and meets the requirements specified, prior to the installation.

Welder Qualifications; FIO.

Certified copies of welder qualifications test records showing qualification in accordance with AWS D1.1.

Welding Inspector; FIO.

Welding Inspector qualifications.

Fabrication; FIO.

A copy of the AISC certificate indicating that the fabrication plant meets the specified structural steelwork category.

SD-14 Samples

High Strength Bolts and Nuts; FIO. Carbon Steel Bolts and Nuts; FIO. Nuts Dimensional Style; FIO. Washers; FIO.

Random samples of bolts, nuts, and washers as delivered to the job site if requested, taken in the presence of the Contracting Officer and provided to the Contracting Officer for testing to establish compliance with specified requirements.

1.4 STORAGE

Material shall be stored out of contact with the ground in such manner and location as will minimize deterioration.

1.5 WELDING INSPECTOR

Welding Inspector qualifications shall be in accordance with AWS D1.1

1.6 ACCESS BRIDGE

The contractor shall construct an access bridge as shown on the contract plans. Compensation for all materials, labor and any incidental items required to fabricate and erect this item of work, including the foundations supporting the access bridge, will be paid for as a subsidiary item to "STRUCTURAL STEEL AND MISCELLANEOUS METALS". All concrete required for this item shall comply with the requirements of SECTION 03300, " CAST-IN-PLACE CONCRETE".

PART 2 PRODUCTS

2.1 STRUCTURAL STEEL

2.1.1 Carbon Grade Steel

Carbon grade steel shall conform to ASTM A 36 and shall be hot dip galvanized according to ASTM A 123, ASTM A 653 or ASTM A 525 as applicable.

2.2 STEEL PIPE

Steel pipe shall conform to ASTM A 53, Type E or Type S, Grade B and shall be hot dip galvanized according to ASTM A 123, ASTM A 653 or ASTM A 525 as applicable.

2.3 HIGH STRENGTH BOLTS AND NUTS

High strength bolts shall conform to ASTM A 325, Type 1 with carbon steel nuts conforming to ASTM A 563, Grade C. Bolts and nuts shall be hot dip galvanized in according to ASTM A 153, Class C.

2.4 CARBON STEEL BOLTS AND NUTS

Carbon steel bolts shall conform to ASTM A 307, Grade A with carbon steel nuts conforming to ASTM A 563, Grade A. Bolts and nuts shall be hot dip galvanized in according to ASTM A 153, Class C.

2.5 NUTS AND DIMENSIONAL STYLE

Carbon steel nuts shall be Hex style when used with ASTM A 307 bolts or Heavy Hex style when used with ASTM A 325 bolts.

2.6 WASHERS

Plain washers shall conform to ASTM F 844. Washers shall be hot dip galvanized according to ASTM A 153, Class C.

2.7 FABRIC

Fabric shall be FS RR-F-191/1D, Type 1, and zinc-coated steel wire with a minimum coating weight of 1.2 ounces per square foot of coated wire. Fabric shall be fabricated from 9 gauge steel wires woven into 2-inch mesh.

2.8 GATE

Gate fabric shall be attached by a method standard with the manufacturer. Hardware items shall be furnished as required for the operation of the gate. Latched shall be arranged so that the padlock will be accessible from both sides of the gate.

2.9 PADLOCK

The padlock shall conform to FS-A-A-1930A, Type EPB, Size 1¾-inch. The padlock shall be keyed and shall be furnished with four (4) keys. Brochures describing the padlock shall be submitted to the Contracting Officer. The Contractor shall provide one padlock.

2.10 HANDRAILS

Steel handrails, including inserts in concrete, shall be steel pipe conforming to ASTM A 53 and shall be hot-dip galvanized. Exposed welds shall be ground smooth. Corner joints shall be coped or mitered, well formed, and in true alignment.

2.11 GRATING

Steel grating shall be welded rectangular design with 1” x 3/16” main bearing bars and shall be hot-dip galvanized. The grating shall be bolted or clipped down to avoid uplift as recommended by the manufacturer of the metal grid walkway.

2.12 ANCHOR BOLTS

Anchor bolts at the baseplate connection shall conform to ASTM A 36 M and galvanized in accordance to ASTM A 153, Class C.

2.13 ACCESSORIES

Ferrous accessories shall be zinc-coated. Truss rods shall be furnished for each terminal post. Truss rods shall be provided with turnbuckles or other equivalent provisions for adjustment. The diameter of the razor wire shall be 3/16 inches, fabricated from a 1-inch wide and 4-inch thick strip of a 430 series stainless steel, hardened to a Rockwell (30 N) 35-40. Clusters of four (4) needle-sharp barbs shall be located 4-inches on center around each coil loop. The number of clusters on each coil log shall be 13±1. Barbs shall have a minimum length of 2.5 inches from tip to tip. The stainless steel barbed tape strip shall be cold rolled around a high tensile galvanized steel core wire having a tensile strength of 220,000 psi and a minimum diameter of 1/8 inch. The barb tape strip shall have a 230 degree wrap around the core wire. Each roll shall consist of 33 loops minimum.

PART 3 EXECUTION

3.1 FABRICATION

Fabrication shall be in accordance with the applicable provisions of AISC S303. Fabrication and assembly shall be done in the shop to the greatest extent possible. Compression joints depending on contact bearing shall have a surface roughness not in excess of 0.5 microinch as determined by ASME b46.1, and ends shall be square within the tolerances for milled ends specified in ASTM A 6. All fabrications shall be galvanized in accordance with ASTM A 123, ASTM A 525, OR ASTM A 653 as applicable.

3.2 ERECTION

Erection of structural steel shall be in accordance with applicable provisions of AISC S303. Handrails shall be bolted to the structural steel framework as shown on the contract plans. Steel floor grating shall be installed after erection of structural steel framework is complete.

3.2.1 Connections

Anchor bolts and other connections between the structural steel and foundations shall be provided and shall be properly located and built into connecting work.

3.2.2 Base Plates and Bearing Plates

Base plates for columns and bearing plates for beams shall be provided as shown in the contract plans. Base plates and bearing plates shall be provided with full bearing after supporting members have been plumbed and properly positioned, but prior to placing superimposed loads. Separate setting plates under columns column base plates will not be permitted. The area under the base plates shall be damp-packed solidly with non-shrink grout as shown on the contract plans and specified in Section 03300 CAST-IN-PLACE STRUCTURAL CONCRETE.

3.2.3 Chain-link Fabric

Chain-link fabric shall be installed on the sides of the posts indicated. Fabric shall be attached

to terminal posts with stretcher bars and tension bands. Bands shall be spaced at approximately 15-inch intervals. Fabric shall be pulled taunt to provide a smooth uniform appearance free from sag. Fabric shall be fastened to line posts at approximately 15-inch intervals and fastened to the top and bottom rails at approximately 24-inch intervals. Fabric shall be cut by untwisting and removing pickets. Splicing shall be accomplished by weaving a single picket into the ends of the rolls to be joined.

3.2.4 Razor Wire

Razor wire shall be installed at the location of the bridge security gate. Razor wire shall be installed to the recommendations of the manufacturer.

3.2.5 Gate

A gate shall be installed at the location shown in the contract plans. Latches, stops and keepers shall be installed as required. The gate shall be installed as recommended by the manufacturer. A keyed padlock and 3-feet of 3/16-inch galvanized steel chain shall be furnished.

** End of Section **

DIVISION 5 – METALS

SECTION 05914

SLUICE GATE AND GATE LIFT ASSEMBLY

TABLE OF CONTENTS

PART 1 GENERAL
- 1.1 SCOPE
- 1.2 APPLICABLE PUBLICATIONS
- 1.3 SUBMITTALS
- 1.4 DELIVERY, STORAGE, AND HANDLING
- 1.5 PROJECT/SITE CONDITIONS
- 1.6 WARRANTY
- 1.7 OPERATION AND MAINTENANCE

PART 2 PRODUCTS
- 2.1 MATERIALS
  - 2.1.1 Frame and Guide Rails
  - 2.1.2 Cover or Slide
  - 2.1.3 Seating Faces
  - 2.1.4 Wedge
  - 2.1.5 Wall Thimbles and Anchor Bolts
  - 2.1.6 Stem and Stem Couplings
  - 2.1.7 Stem Guides
  - 2.1.8 Gate Lift Operator
  - 2.1.9 Portable Gasoline Powered Actuator
  - 2.1.10 Handwheel
  - 2.1.11 Stem Cover and Position Indication
  - 2.1.12 Painting
- 2.2 FABRICATION
  - 2.2.1 Fabrication Drawings
  - 2.2.2 Shop Assembly Drawings
  - 2.2.3 Delivery Drawings
  - 2.2.4 Field Installation Drawings

PART 3 EXECUTION
- 3.1 INSTALLATION
  - 3.1.1 Placement of Wall Thimble
  - 3.1.2 Concrete Pour
  - 3.1.3 Sluice Gate Placement
- 3.2 ACCEPTANCE TRIAL OPERATION AND TESTS
- 3.3 PROTECTION OF FINISHED WORK

SECTION 05914

SLUICE GATE AND GATE LIFT ASSEMBLY

PART 1 GENERAL

1.1 SCOPE

The work to be done under this section of specifications consists of furnishing all plants, labor, materials, equipment and performing all operations and tests necessary for the installation of a 36" x 36" sluice gate and gate lift assembly, gasoline powered portable actuator, position indicator, grease flange, manual operator with removal crankhandle, stem cover, pedestal base hardware, stem, stem guides, stem stop nuts, sluice gate with extended flange and wall thimble, and other appurtenances as specified herein. The sluice gate and gate lift assembly shall be the product supplied by one manufacturer of similar assembly for similar use. The sluice gate and gate lift assemblies shall be the size, type, material and construction as shown on the drawings and specified herein. Gates shall meet the requirements of AWWA Specifications C501 or as modified by these specifications. All component parts shall be of the type of material shown, and interchangeable where size and material are the same without grinding, chipping, or special fitting in the field. All mating and sliding parts shall be fully machined. All sluice gate parts, including lift, shall be designed for the heads based on design water surface elevation, flowline elevation and gate size shown on the contract drawings.

1.2 APPLICABLE PUBLICATIONS

The publications listed below form a part of this specification to the extent referenced. The publications are referred to in the text by basic designation only.

AMERICAN WATER WORKS ASSOCIATION (AWWA)

AWWA C501	(1992) AWWA Standard for cast-iron Sluice Gate

AMERICAN SOCIETY OR TESTING AND MATERIALS (ASTM)

ASTM A 126	(1984;R 1991) Gray Iron Castings for Valves, Flanges, And Pipe Fittings
ASTM A 276	(1992) Free-Machining Stainless and Heat - Resisting Steel Bars
ASTM B 584	(1993b) Copper Alloy Sand Castings for General Applications
ASTM F 593	(1991) Stainless Steel Bolts, Hex Cap Screws,

And Studs

ASTM F 594 (1991) Stainless Steel Nuts

1.3 SUBMITTALS

Government approval is required for all submittals with a "GA" designation; submittals having an "FIO" designation are for information only. The following shall be submitted in accordance ith Section 01300 SUBMITTAL PROCEDURES:

SD-01

Materials Mechanical & Equipment; GA.

Manufacturer's catalog data and descriptive literature shall be submitted for all standard equipment and products to be incorporated in the work. This data shall include specifications and assembly drawings showing sizes, ratings, parts and material lists, overall dimensions, and mounting dimensions.

Design and Performance Requirements; FIO.

Shop Assembly and Testing; FIO.

Procedures for shop testing shall be submitted.

Field Testing; GA.

Procedure for field-testing shall be submitted.

SD-04 Drawings

Detail Drawings; GA.

Detail drawings and schematics shall be submitted for approval.

SD-07 SCHEDULES

Material Orders; FIO.

Copies of purchase orders, mill orders, shop orders and work orders for materials shall be submitted prior to the use of the materials in the work.

Material Lists; FIO.

Materials list for fabricated items shall be submitted at the time of submittal of detail drawings.

Shipping Bill; FIO.

Shipping bill shall be submitted with the delivery of finished pieces to the site.

SD-09 Reports

Shop Tests, Inspections, and Verifications; FIO.

Certified test reports for materials shall be submitted with all materials delivered to the site. Operational test reports shall be submitted for all required shop testing and testing of the equipment after installation.

Acceptance Trial Operation and Test; FIO.

Submit operational and test results before completion of the contract.

SD-18 Records

Materials Disposition Records; FIO.

Submit system of identification that shows the disposition of specific lots of approved materials and fabricated items in the work before completion of contract.

SD-19 Operation and Maintenance Manuals

Operation and maintenance Manuals, GA.

Operation and maintenance requirement shall be as specified.

1.4 DELIVERY, STORAGE, AND HANDLING

Materials and fabricated items shall be packed as necessary to ensure safe shipment and is the responsibility of the Contractor. The Contractor shall count all parts after receiving the shipment notifying the manufacturer of any shortages immediately. Sluice gate and equipment shall be stored in accordance with the recommendations of the manufacturer. If damage occurs to any item of the sluice gate or gate lift assembly, the Contractor shall take full responsibility to replace or repair the item broken whether within warranty or not as verified by the manufacturer and approved by the Contracting Officer at no cost to the government. While items are stored at the project site, they shall be stored with protection from weather, humidity, temperature variation, dirt and rust, vandalism, theft, or any other potential damage and in compliance with the recommendations of the manufacturer.

1.5 PROJECT/SITE CONDITIONS

The Contractor shall visit the site to thoroughly familiarize himself with all details of the work and working conditions, to verify dimensions in the field, and he shall then advise the Contracting Officer of any discrepancies prior to performing any work. The Contractor shall be specifically responsible for the coordination and proper relation of his work to the structure and work of all

trades.

1.6 WARRANTY

Products shall be warranted against defects in materials and workmanship for (18) eighteen months after shipment or (12) twelve months after installation, whichever occurs first. In cases where the equipment manufacturer's advertised minimum guarantee is in excess of the above warranty, it shall remain in force for its full period. Upon receipt of notice from the Government of failure of any of the parts during the warranty period, new replacement parts shall be furnished and installed promptly at no additional cost to the Government.

1.7 OPERATION AND MAINTENANCE

The Contractor shall furnish 3 complete sets of instructions containing the manufacturer's operation and maintenance instructions for the sluice gate and gate lift assembly to the Contracting Officer. Each set shall be permanently bound and shall have a hard cover. One complete set shall be furnished prior to field-testing and the remaining sets shall be furnished before the contract is completed. The following identification shall be inscribed on the covers; OPERATING AND MAINTENANCE MANUAL, title of the project, location of the project, the name of the Contractor, and the contract number. The Operation and Maintenance (O&M) Manual shall contain all information that may be needed or useful for operation, maintenance, repair, dismantling or assembling, and for identification of parts for ordering replacements. The manual will be subject to approval.

PART 2 PRODUCTS

2.1 MATERIALS

All materials used in the construction of the sluice gate or gate lift assembly and other appurtenances shall be as specified herein.

2.1.1 Frame and Guide Rails

The frame and guide rails shall be cast iron conforming to the requirements of ASTM A-126 Class B and shall be one-piece construction or may have guides doweled and bolted to the frame. Frames shall be of the standard extended flange type with rectangular opening as indicated on the plans. A machined dovetail groove for the mounting of the bronze seat facings shall be provided on the front face of the frame around top and sides of the opening. A neoprene seal shall be securely contained in the invert of this frame. The frame shall be provided with cast-on pads, which shall be machined, drilled, and tapped, for the mounting of the wedge device. The back of the frame flange shall be machined to a plane and drilled with standard anchor bolt pattern. Guide rails shall be of such length as to retain at least one-half of the vertical height of the slide when it is in the fully opened position. A groove running the full length of the guide rail shall be accurately machined to receive the slide tongue, with a nominal clearance of 1/16 inch. The gate assembly shall be rated for operation under condition of 55 foot seating and 20 foot unseating.

2.1.2 Cover or Slide

The cover shall be cast iron conforming to ASTM A126 Class B and shall be of one-piece construction. The cover shall have vertical and horizontal ribs, a reinforced pocket for receiving the thrust nut, pads for receiving the wedges, and a reinforced periphery around the back side of the cover for machining of the dovetail grooves in which the seating faces shall be mounted. All wedge pads shall be machined, drilled and tapped to receive the wedge devices. The cover shall have fully machined tongues running the full length of each side to properly engage the guide rail grooves. A thrust nut shall be provided to attach the slide to the stem. The nut shall be threaded and, in the case of rising stems, provided with keys on two setscrews locked into indents in the stem to prevent rotation of the stem.

2.1.3 Seating Faces

All seating faces for both covers and frames shall be malleable extruded corrosion resistant material of a shape that will fill and permanently lock in the full width grooves of the slide and the frame. No other means of attachment will be allowed. They shall be machined to a 63 micro-inch finish, or better.

2.1.4 Wedges

All wedges and wedge blocks shall be solid manganese bronze conforming to ASTM B-584-Alloy 865 and shall be machined to give maximum contact and wedge action. Wedges shall be fully adjustable, but once set shall not rotate or move from the desired position. All fasteners and adjustment screws shall be stainless steel conforming to ASTM F593 Grade B8 for bolts and ASTM F-594 Grade 8 for nuts.

2.1.5 Wall Thimbles and Anchor Bolts

Wall thimbles shall be provided with all gates as shown on the plans. Each thimble shall be of one-piece cast iron construction and of the section and depth as specified in the plans. There shall be integrally cast water stop around the periphery of the thimble. The front flange of the thimble shall be machined, drilled and tapped to receive the sluice gate attaching studs. Bolt pattern shall match gate bolt pattern. After machining, the front flange shall be marked with vertical centerline and the word "top" for correct alignment. Thimbles shall be provided with grout holes in the invert to permit entrapped air to escape. A mastic type gasket shall be provided between the sluice gate and the wall thimble. Anchor bolts shall be corrosion resistant.

2.1.6 Stem and Stem Couplings

The operating stem shall be 2 inches in diameter as shown on the drawings to withstand stresses induced by normal operating forces without buckling or permanent distortion. Stems shall be fabricated from round bar stock of stainless steel conforming to ASTM A-276 Type 303 or 276 Type 304 and shall be provided with 29 degree modified or full acme threads. Rising stems shall be provided with adjustable limit / stop nuts made of cast bronze above and below the floor stand lift nut to prevent over travel of the gate in either direction.

2.1.7 Stem Guides

Stem guides shall be cast iron conforming to ASTM A-126 Class B, with bronze bushings, and mounted on cast iron brackets. Guides shall be adjustable in two directions and shall be so constructed that when properly spaced they will hold the stem in alignment and still allow enough play to permit easy operation. Stem guide spacing shall be as recommended by the manufacturer or as shown on the contract drawings, but in no case shall it exceed a l/r ratio of 200. Brackets shall be attached to the wall or structural member by A325 bolts or by stainless steel anchors (into existing concrete structure) of sufficient strength to prevent twisting or sagging under load.

2.1.8 Gate Lift Operator

A pedestal mounted floor stand unit shall operate the sluice gates. The pedestal floor stand unit shall be operated by a removal handwheel or crankhandle and shall be compatible with the portable gasoline powered actuator as specified herein. The pedestal shall be cast iron. The pedestal gate lift shall be attached to the structural platform with corrosion resistant hardware. Each lift shall be provided with a threaded cast bronze lift nut to engage the threaded portion of the stem. The lift nut shall have a machined flange, fitted above and below with thrust ball or roller bearings. Gate lift operators shall have either a single or double gear reduction. Lifts shall be two-speed. The gears shall be machined-cut teeth. Bronze bushings or roller bearings shall support pinion gears. The lift mechanism shall be totally enclosed within a cast iron housing adequately provided with lubricated fittings. The handcrank input shafts shall be approximately 36 inches from the operating floor unless otherwise shown.

A grease flange for lubrication of stem shall be provided and mounted between the operator and pedestal. A stem guide shall be provided at the base of the pedestal. The rising stem lift shall be provided with a dial type position indicator.

2.1.9 Portable Gasoline Powered Actuator

The gasoline powered actuator shall be recommended by the gate manufacturer and compatible with the gate, gate operator,etc. required by this contract. The operator shall be a completely portable, two-cycle, gasoline engine actuator furnished with all the necessary adapters to drive the sluice gate specified. The unit shall be furnished with aluminum tripod cart for easy operation. The unit shall be furnished with 64 spline to : square coupler for interchanging between the tow input shafts

Drive unit shall incorporate a direct drive design.

The unit shall drive the operators using a (T-drive) gear box. Reverse operation is achieved by rotating the drive unit 180 degrees.

A safety clutch must be supplied with any unit that exceeds 80 foot pounds of output torque.

The operator unit shall be provided with fabricated steel pedestal or baseplate with ample base area to transmit thrust forces to floor or support without undue bearing pressure. The entire unit shall be a self-contained unit with integral gearing.

2.1.10 Handwheel

The gate lift shall be equipped with a removal crankhandle for manual operation. The handwheel or crankhandle shall require an effort of no more than 60 pounds on the rim for seating or unseating load, or 40 pounds for running load. The handwheel or crankhandle shall have an arrow and the word "Open" indicating required rotation. The handwheel or crankhandle shall operate in the clockwise direction to close.

2.1.11 Stem Cover and Position Indicator

All gates shall have rising stems unless otherwise noted, and shall be provided with a galvanized metal pipe stem cover. The top of stem cover shall be a minimum of 6 inches from the top of stem when the gate is in the fully raised position. The cover shall be of sufficient diameter and length to permit full travel of threaded stem without obstruction. The top of the stem cover shall be capped and the bottom end threaded with national pipe threads for easy pipe installation.Threads shall be sealed with pipe dope or teflon tape. The stem cover shall be fitted with a breather located 6 inches above the operator. The breather shall consist of 1/8 inch nipple-style inline filter with sintered-bronze element. The breather shall be installed into a tapped hole in the side of the stem cover. A 1/8 inch elbow shall be screwed onto the end of the filter and pointed down to prevent water entry. There shall be provisions for a filling storage area above the stem nut with grease without having to remove the stem cover.

2.1.12 Painting

All cast iron parts of the sluice gate and gate lift assembly (not in bearing or sliding contact) shall be painted with one coat iron oxide primer and top two coats of gray color silicone enamel paint. Insofar as practical, the complete coating system shall be applied to individual components and items before assembly to ensure complete coverage and maximum protection against corrosion. Chips, scratches, and other damage to shop-applied painted surfaces shall be repainted in the field with appropriate matching paints as recommended by the manufacturer.

2.2 FABRICATION

Detail drawings, including fabrication drawings, shop assembly drawings, delivery drawings and field installation drawings shall be as specified herein.

2.2.1 Fabrication Drawings

Fabrication drawings shall show complete details of materials, tolerances, connections, and proposed welding sequences which clearly differentiate shop welds and field welds.

2.2.2 Shop Assembly Drawings

Shop assembly drawings shall provide details for connecting the adjoining fabricated components in the shop to assure satisfactory field installation.

2.2.3 Delivery Drawings

Delivery drawings shall provide descriptions of methods of delivering components to the site, including details for supporting fabricated components during shipping to prevent distortion or other damages.

2.2.4 Field Installation Drawings

Field installation drawings shall provide a detailed description of the field installation procedures. The description shall include the location and method of support of installation and handling equipment; provisions to be taken to protect concrete and other work during installation; method of maintaining components in correct alignment; and methods for installing other appurtenant items.

PART 3 EXECUTION

3.1 INSTALLATION

3.1.1 Placement of Wall Thimble

The thimble shall be secured in the forms to the required grade and alignment. Thimble should be flush or projecting slightly from the wall face.Use timbers or other bracing on the inside of the opening to support the thimble and prevent warpage during the pour. This is especially important on larger thimbles or when the concrete cover will be especially high.Secure anchor bolts for guide rail extensions (or provide block out) in the proper position as given on manufacturer's installation drawing. Check projection and perpendicular alignment of these anchors.

3.1.2 Concrete Pour

Pour concrete, using care not to tilt or move thimble from its original position in the forms.

Let concrete set, then remove forms and bracings.

3.1.3 Sluice Gate Placement

Thoroughly clean the front machined face of the thimble and place clean studs into tapped holes provided.

Clean the back of the gate frame or flange thoroughly. Apply a thin coat of mastic (such as butyl rubber compound or black asphaltic compound), on the front face of the thimble.

Mount the completely assembled gate on the thimble. Place nuts on studs and tighten uniformly until a metal to metal contact is made, removing excess mastic.

Check clearance between seating surfaces for compliance with manufacturer's recommendations. In the event that the gate is not seating properly, make wedge adjustments. Gate is now ready for

initial operation.

3.2 ACCEPTANCE TRIAL OPERATION AND TESTS

The gate manufacture's erection engineer, having greater than 5 years work experience in the installation and/or supervision of the installation of the specified gate or similar type gates, shall be at the jobsite during gate start up or gate acceptance operations. Engineer shall verify the setting of limit/stop nuts.

After the sluice gate and gate lift assemblies have been installed, the Contracting Officer will examine the complete system for final acceptance. Operation and test results shall be furnished to the Contracting Officer. The sluice gate and gate lift assembly will be examined first to determine whether or not the workmanship conforms to the specification requirements. The Contractor shall operate the gate throughout its full operating range a sufficient number of times using the gasoline powered portable actuator unit and the handwheel or crankhandle manual operation to demonstrate proper operation. The trial operation and testing of the gate assembly shall be conducted in the dry. The neoprene bottom seals shall be checked to ensure that it is compressed against the bottom of the slide. Adjustments shall be made to the assembly until all components function as required. The other appurtenances will be inspected to assure proper operation. Required repairs or replacements to correct defects, as determined by the Contracting Officer, shall be made at no additional cost to the Government. The trial operation and testing shall be repeated after defects are corrected.

3.3 PROTECTION OF FINISHED WORK

The Contractor shall take appropriate means to protect the sluice gate and gate lift assembly for the duration of the construction until the contract is complete.

** End of Section **

DIVISION 6 – WOOD AND PLASTIC

THRU

DIVISION 16 – ELECTRICAL

(NOT USED)